ENGINEERING BY TRENCO
A MiTek Affiliate

RE: J0222-0628
Cates\Lot 678 Lexington Plantation

Trenco
818 Soundside Rd
Edenton, NC 27932

**Site Information:**

Customer: Project Name: J0222-0628
Lot/Block: Model:
Address: Subdivision:
City: State:

**General Truss Engineering Criteria & Design Loads (Individual Truss Design Drawings Show Special Loading Conditions):**

Design Code: IRC2009/TPI2007 Design Program: MiTek 20/20 8.4
Wind Code: ASCE 7-05 Wind Speed: 130 mph
Roof Load: 40.0 psf Floor Load: N/A psf

This package includes 30 individual, dated Truss Design Drawings and 0 Additional Drawings.

| No. | Seal# | Truss Name | Date | No. | Seal# | Truss Name | Date |
|---|---|---|---|---|---|---|---|
| 1 | I49924636 | A1 | 1/27/2022 | 21 | I49924656 | M2 | 1/27/2022 |
| 2 | I49924637 | A1GE | 1/27/2022 | 22 | I49924657 | M2GE | 1/27/2022 |
| 3 | I49924638 | A2 | 1/27/2022 | 23 | I49924658 | M3 | 1/27/2022 |
| 4 | I49924639 | A3 | 1/27/2022 | 24 | I49924659 | M6 | 1/27/2022 |
| 5 | I49924640 | A3A | 1/27/2022 | 25 | I49924660 | M6A | 1/27/2022 |
| 6 | I49924641 | A3GE | 1/27/2022 | 26 | I49924661 | V1 | 1/27/2022 |
| 7 | I49924642 | B1 | 1/27/2022 | 27 | I49924662 | V2 | 1/27/2022 |
| 8 | I49924643 | B1GE | 1/27/2022 | 28 | I49924663 | V3 | 1/27/2022 |
| 9 | I49924644 | B2 | 1/27/2022 | 29 | I49924664 | V4 | 1/27/2022 |
| 10 | I49924645 | B3 | 1/27/2022 | 30 | I49924665 | V5 | 1/27/2022 |
| 11 | I49924646 | B4 | 1/27/2022 | | | | |
| 12 | I49924647 | C1 | 1/27/2022 | | | | |
| 13 | I49924648 | C1GE | 1/27/2022 | | | | |
| 14 | I49924649 | CJ01 | 1/27/2022 | | | | |
| 15 | I49924650 | D1 | 1/27/2022 | | | | |
| 16 | I49924651 | D1GE | 1/27/2022 | | | | |
| 17 | I49924652 | J02 | 1/27/2022 | | | | |
| 18 | I49924653 | J03 | 1/27/2022 | | | | |
| 19 | I49924654 | J06 | 1/27/2022 | | | | |
| 20 | I49924655 | M1 | 1/27/2022 | | | | |

The truss drawing(s) referenced above have been prepared by
Truss Engineering Co. under my direct supervision
based on the parameters provided by Comtech, Inc - Fayetteville.

Truss Design Engineer's Name: Gilbert, Eric

My license renewal date for the state of North Carolina is December 31, 2022.

North Carolina COA: C-0844

IMPORTANT NOTE: The seal on these truss component designs is a certification that the engineer named is licensed in the jurisdiction(s) identified and that the designs comply with ANSI/TPI 1. These designs are based upon parameters shown (e.g., loads, supports, dimensions, shapes and design codes), which were given to TRENCO. Any project specific information included is for TRENCO customers file reference purpose only, and was not taken into account in the preparation of these designs. TRENCO has not independently verified the applicability of the design parameters or the designs for any particular building. Before use, the building designer should verify applicability of design parameters and properly incorporate these designs into the overall building design per ANSI/TPI 1, Chapter 2.

NORTH CAROLINA PROFESSIONAL SEAL 036322 ENGINEER ERIC A. GILBERT

January 27, 2022

Gilbert, Eric

| Job | Truss | Truss Type | Qty | Ply | Cates\Lot 678 Lexington Plantation |
|---|---|---|---|---|---|
| J0222-0628 | A1 | FINK | 3 | 1 | I49924636<br>Job Reference (optional) |

Comtech, Inc, Fayetteville, NC - 28314, 8.430 s Aug 16 2021 MiTek Industries, Inc. Thu Jan 27 08:53:12 2022 Page 1
ID:mP4IR_1wA7sHHYpJqichtZz2PVG-bG3KNPYUFx79FSdNoDWM7A0U?RbkslfJ2W95LQzrCSb

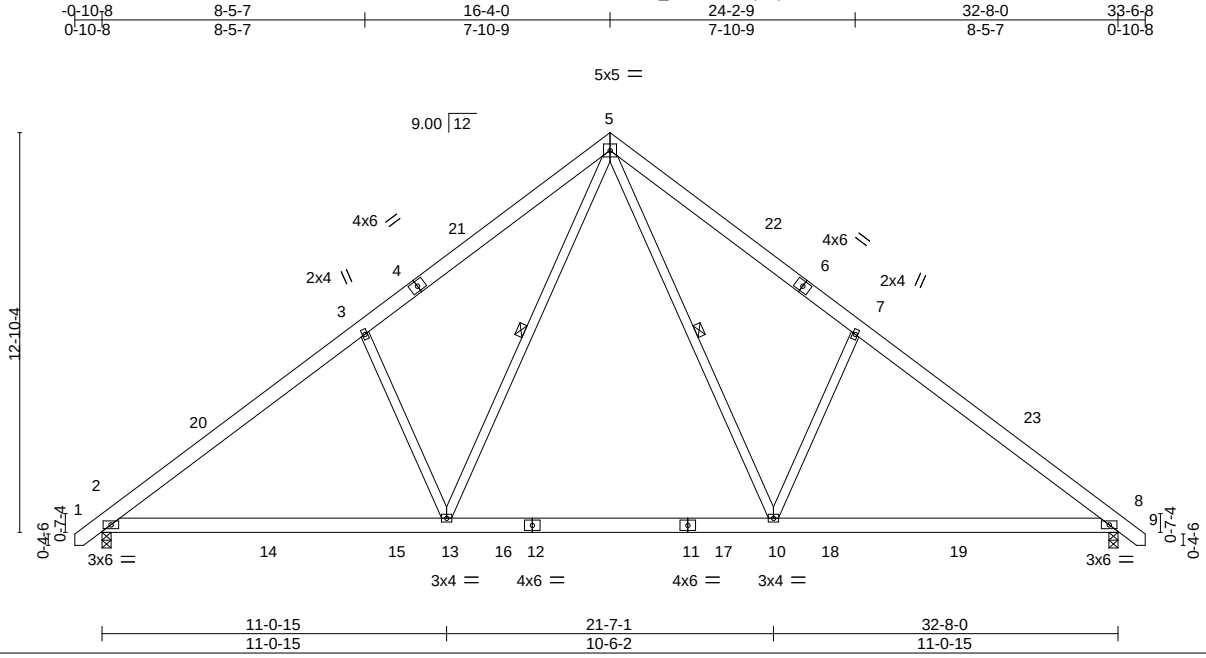


| LOADING (psf) | | SPACING- | 2-0-0 | CSI. | | DEFL. | in | (loc) | l/defl | L/d | PLATES | GRIP |
|---|---|---|---|---|---|---|---|---|---|---|---|---|
| TCLL | 20.0 | Plate Grip DOL | 1.15 | TC | 0.30 | Vert(LL) | -0.15 | 10-13 | >999 | 360 | MT20 | 244/190 |
| TCDL | 10.0 | Lumber DOL | 1.15 | BC | 0.57 | Vert(CT) | -0.23 | 8-10 | >999 | 240 | | |
| BCLL | 0.0 * | Rep Stress Incr | YES | WB | 0.46 | Horz(CT) | 0.04 | 8 | n/a | n/a | | |
| BCDL | 10.0 | Code IRC2015/TPI2014 | | Matrix-S | | Wind(LL) | 0.05 | 2-13 | >999 | 240 | Weight: 236 lb | FT = 20% |

**LUMBER-**
TOP CHORD 2x6 SP No.1
BOT CHORD 2x6 SP No.1
WEBS 2x4 SP No.2

**BRACING-**
TOP CHORD Structural wood sheathing directly applied or 5-1-11 oc purlins.
BOT CHORD Rigid ceiling directly applied or 10-0-0 oc bracing.
WEBS 1 Row at midpt 5-13, 5-10

**REACTIONS.** (size) 2=0-3-8, 8=0-3-8
Max Horz 2=-307(LC 10)
Max Uplift 2=-75(LC 12), 8=-75(LC 13)
Max Grav 2=1590(LC 19), 8=1590(LC 20)

**FORCES.** (lb) - Max. Comp./Max. Ten. - All forces 250 (lb) or less except when shown.
TOP CHORD 2-3=-2065/372, 3-5=-1960/513, 5-7=-1961/513, 7-8=-2066/372
BOT CHORD 2-13=-128/1773, 10-13=0/1151, 8-10=-136/1593
WEBS 3-13=-574/350, 5-13=-210/1090, 5-10=-210/1091, 7-10=-574/350

**NOTES-**
1) Unbalanced roof live loads have been considered for this design.
2) Wind: ASCE 7-10; Vult=130mph Vasd=103mph; TCDL=6.0psf; BCDL=6.0psf; h=15ft; Cat. II; Exp C; Enclosed; MWFRS (envelope) and C-C Exterior(2) -0-8-13 to 3-7-15, Interior(1) 3-7-15 to 16-4-0, Exterior(2) 16-4-0 to 20-8-13, Interior(1) 20-8-13 to 33-4-13 zone;C-C for members and forces & MWFRS for reactions shown; Lumber DOL=1.60 plate grip DOL=1.60
3) This truss has been designed for a 10.0 psf bottom chord live load nonconcurrent with any other live loads.
4) * This truss has been designed for a live load of 30.0psf on the bottom chord in all areas where a rectangle 3-6-0 tall by 2-0-0 wide will fit between the bottom chord and any other members, with BCDL = 10.0psf.
5) Provide mechanical connection (by others) of truss to bearing plate capable of withstanding 75 lb uplift at joint 2 and 75 lb uplift at joint 8.


January 27,2022



ENGINEERING BY TRENCO A MiTek Affiliate
818 Soundside Road
Edenton, NC 27932

| Job | Truss | Truss Type | Qty | Ply | Cates\Lot 678 Lexington Plantation |
|---|---|---|---|---|---|
| J0222-0628 | A1GE | GABLE | 1 | 1 | I49924637<br>Job Reference (optional) |

Comtech, Inc, Fayetteville, NC - 28314, 8.430 s Aug 16 2021 MiTek Industries, Inc. Thu Jan 27 08:53:14 2022 Page 1

ID:mP4IR_1wA7sHHYpJqichtZz2PVG-XfA4o5aknYNtUmnmvdYqCb5tYFPkKHgbWqeCPIzrCSZ

-0-10-8 14-1-5 18-6-11 32-8-0 33-6-8

0-10-8 14-1-5 4-5-5 14-1-5 0-10-8

Scale = 1:68.3

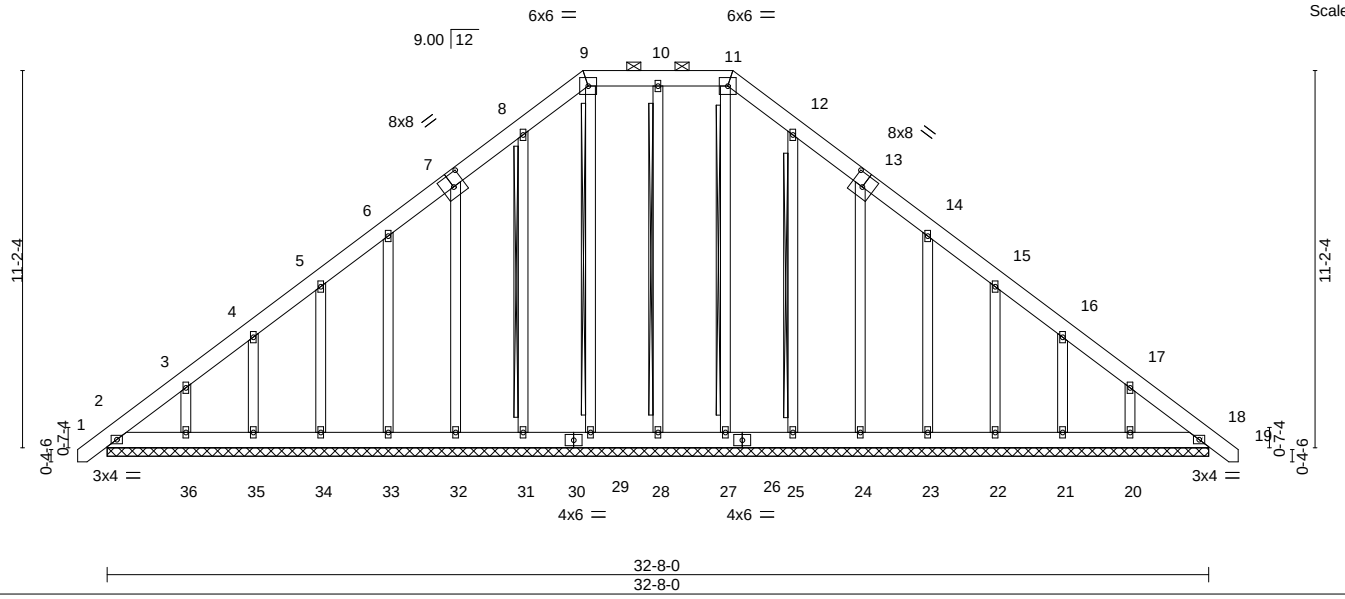


Plate Offsets (X,Y)-- [7:0-4-0,0-4-8], [13:0-4-0,0-4-8]

| LOADING (psf) | | SPACING- 2-0-0 | | CSI. | | DEFL. | in | (loc) | l/defl | L/d | PLATES | GRIP |
|---|---|---|---|---|---|---|---|---|---|---|---|---|
| TCLL | 20.0 | Plate Grip DOL | 1.15 | TC | 0.04 | Vert(LL) | 0.00 | 18 | n/r | 120 | MT20 | 244/190 |
| TCDL | 10.0 | Lumber DOL | 1.15 | BC | 0.03 | Vert(CT) | 0.00 | 18 | n/r | 120 | | |
| BCLL | 0.0 * | Rep Stress Incr | YES | WB | 0.17 | Horz(CT) | 0.01 | 18 | n/a | n/a | | |
| BCDL | 10.0 | Code IRC2015/TPI2014 | | Matrix-S | | | | | | | Weight: 314 lb | FT = 20% |

**LUMBER-**

TOP CHORD 2x6 SP No.1
BOT CHORD 2x6 SP No.1
OTHERS 2x4 SP No.2

**BRACING-**

TOP CHORD Structural wood sheathing directly applied or 6-0-0 oc purlins, except 2-0-0 oc purlins (6-0-0 max.): 9-11.
BOT CHORD Rigid ceiling directly applied or 10-0-0 oc bracing.
WEBS T-Brace: 2x4 SPF No.2 - 10-28, 9-29, 8-31, 11-27, 12-25
Fasten (2X) T and I braces to narrow edge of web with 10d (0.131"x3") nails, 6in o.c.,with 3in minimum end distance. Brace must cover 90% of web length.

**REACTIONS.** All bearings 32-8-0.
(lb) - Max Horz 2=-335(LC 10)
Max Uplift All uplift 100 lb or less at joint(s) 28, 29, 31, 33, 34, 35, 25, 23, 22, 21, 18 except 2=-103(LC 8), 32=-108(LC 12), 36=-126(LC 12), 24=-110(LC 13), 20=-123(LC 13)
Max Grav All reactions 250 lb or less at joint(s) 2, 28, 29, 31, 32, 33, 34, 35, 36, 27, 25, 24, 23, 22, 21, 20, 18

**FORCES.** (lb) - Max. Comp./Max. Ten. - All forces 250 (lb) or less except when shown.
TOP CHORD 2-3=-332/272, 7-8=-226/274, 8-9=-280/323, 9-10=-248/294, 10-11=-248/294, 11-12=-280/323, 12-13=-226/256
BOT CHORD 2-36=-157/250, 35-36=-157/250, 34-35=-157/250, 33-34=-157/250, 32-33=-157/250, 31-32=-161/252, 29-31=-161/252, 28-29=-160/250, 27-28=-160/250, 25-27=-161/252, 24-25=-161/252

**NOTES-**

1) Unbalanced roof live loads have been considered for this design.
2) Wind: ASCE 7-10; Vult=130mph Vasd=103mph; TCDL=6.0psf; BCDL=6.0psf; h=15ft; Cat. II; Exp C; Enclosed; MWFRS (envelope) gable end zone and C-C Corner(3) -0-8-13 to 3-7-15, Exterior(2) 3-7-15 to 14-2-4, Corner(3) 14-2-4 to 22-10-9, Exterior(2) 22-10-9 to 33-4-13 zone;C-C for members and forces & MWFRS for reactions shown; Lumber DOL=1.60 plate grip DOL=1.60
3) Truss designed for wind loads in the plane of the truss only. For studs exposed to wind (normal to the face), see Standard Industry Gable End Details as applicable, or consult qualified building designer as per ANSI/TPI 1.
4) Provide adequate drainage to prevent water ponding.
5) All plates are 2x4 MT20 unless otherwise indicated.
6) Gable requires continuous bottom chord bearing.
7) Gable studs spaced at 2-0-0 oc.
8) This truss has been designed for a 10.0 psf bottom chord live load nonconcurrent with any other live loads.
9) * This truss has been designed for a live load of 30.0psf on the bottom chord in all areas where a rectangle 3-6-0 tall by 2-0-0 wide will fit between the bottom chord and any other members.
10) Provide mechanical connection (by others) of truss to bearing plate capable of withstanding 100 lb uplift at joint(s) 28, 29, 31, 33, 34, 35, 25, 23, 22, 21, 18 except (jt=lb) 2=103, 32=108, 36=126, 24=110, 20=123.
11) Graphical purlin representation does not depict the size or the orientation of the purlin along the top and/or bottom chord.
12) Warning: Additional permanent and stability bracing for truss system (not part of this component design) is always required.


January 27,2022



ENGINEERING BY TRENCO A MiTek Affiliate
818 Soundside Road
Edenton, NC 27932

| Job | Truss | Truss Type | Qty | Ply | Cates\Lot 678 Lexington Plantation |
|---|---|---|---|---|---|
| J0222-0628 | A2 | FINK | 1 | 1 | I49924638<br>Job Reference (optional) |

Comtech, Inc, Fayetteville, NC - 28314, 8.430 s Aug 16 2021 MiTek Industries, Inc. Thu Jan 27 08:53:15 2022 Page 1
ID:mP4IR_1wA7sHHYpJqichtZz2PVG-?rkS?RaMYsVk6wMyTL33loe_8fbN3fMlkUOlylzrCSY

| 8-5-7 | 16-4-0 | 24-2-9 | 32-8-0 | 33-6-8 |
|---|---|---|---|---|
| 8-5-7 | 7-10-9 | 7-10-9 | 8-5-7 | 0-10-8 |

Scale = 1:73.7

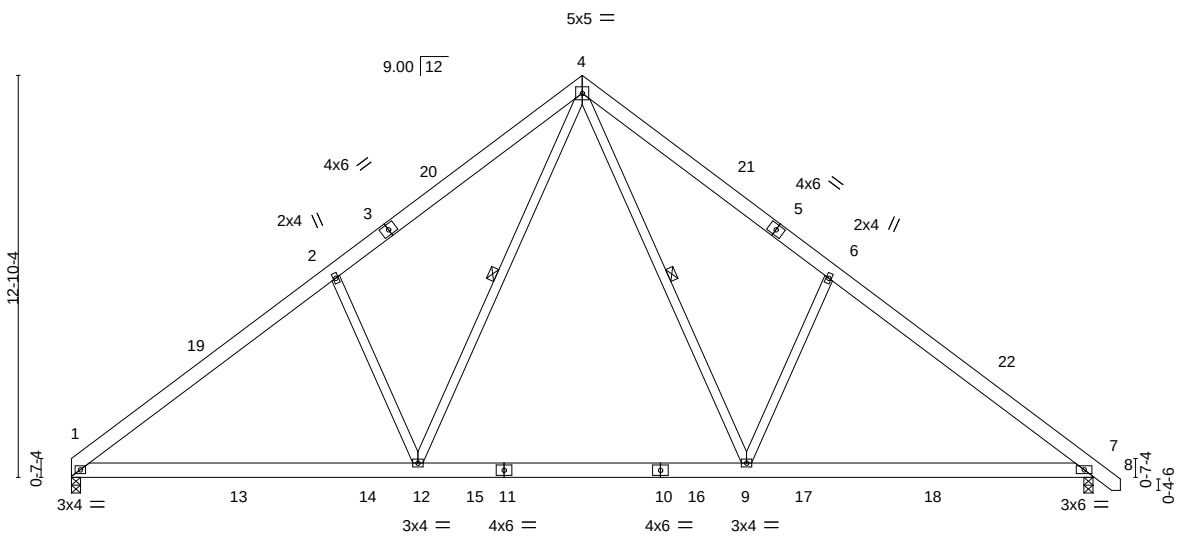


| LOADING (psf) | | SPACING- 2-0-0 | | CSI. | | DEFL. in (loc) l/defl L/d | | PLATES | GRIP |
|---|---|---|---|---|---|---|---|---|---|
| TCLL | 20.0 | Plate Grip DOL | 1.15 | TC | 0.31 | Vert(LL) -0.15 9-12 >999 360 | | MT20 | 244/190 |
| TCDL | 10.0 | Lumber DOL | 1.15 | BC | 0.58 | Vert(CT) -0.23 1-12 >999 240 | | | |
| BCLL | 0.0 * | Rep Stress Incr | YES | WB | 0.46 | Horz(CT) 0.04 7 n/a n/a | | | |
| BCDL | 10.0 | Code IRC2015/TPI2014 | | Matrix-S | | Wind(LL) 0.05 7-9 >999 240 | | Weight: 233 lb | FT = 20% |

**LUMBER-**
TOP CHORD 2x6 SP No.1
BOT CHORD 2x6 SP No.1
WEBS 2x4 SP No.2

**BRACING-**
TOP CHORD Structural wood sheathing directly applied or 5-1-2 oc purlins.
BOT CHORD Rigid ceiling directly applied or 10-0-0 oc bracing.
WEBS 1 Row at midpt 4-12, 4-9

**REACTIONS.** (size) 1=0-3-8, 7=0-3-8
Max Horz 1=-303(LC 8)
Max Uplift 1=-62(LC 12), 7=-75(LC 13)
Max Grav 1=1540(LC 19), 7=1590(LC 20)

**FORCES.** (lb) - Max. Comp./Max. Ten. - All forces 250 (lb) or less except when shown.
TOP CHORD 1-2=-2068/379, 2-4=-1964/522, 4-6=-1961/513, 6-7=-2066/373
BOT CHORD 1-12=-140/1777, 9-12=0/1152, 7-9=-139/1594
WEBS 2-12=-576/355, 4-12=-212/1094, 4-9=-211/1090, 6-9=-575/350

**NOTES-**
1) Unbalanced roof live loads have been considered for this design.
2) Wind: ASCE 7-10; Vult=130mph Vasd=103mph; TCDL=6.0psf; BCDL=6.0psf; h=15ft; Cat. II; Exp C; Enclosed; MWFRS (envelope) and C-C Exterior(2) 0-1-12 to 4-6-9, Interior(1) 4-6-9 to 16-4-0, Exterior(2) 16-4-0 to 20-8-13, Interior(1) 20-8-13 to 33-4-13 zone;C-C for members and forces & MWFRS for reactions shown; Lumber DOL=1.60 plate grip DOL=1.60
3) This truss has been designed for a 10.0 psf bottom chord live load nonconcurrent with any other live loads.
4) * This truss has been designed for a live load of 30.0psf on the bottom chord in all areas where a rectangle 3-6-0 tall by 2-0-0 wide will fit between the bottom chord and any other members, with BCDL = 10.0psf.
5) Provide mechanical connection (by others) of truss to bearing plate capable of withstanding 100 lb uplift at joint(s) 1, 7.


January 27,2022



ENGINEERING BY TRENCO A MiTek Affiliate
818 Soundside Road
Edenton, NC 27932

| Job | Truss | Truss Type | Qty | Ply | Cates\Lot 678 Lexington Plantation |
|---|---|---|---|---|---|
| J0222-0628 | A3 | FINK | 7 | 1 | I49924639<br>Job Reference (optional) |

Comtech, Inc, Fayetteville, NC - 28314, 8.430 s Aug 16 2021 MiTek Industries, Inc. Thu Jan 27 08:53:16 2022 Page 1
ID:mP4IR_1wA7sHHYpJqichtZz2PVG-T1IrDnb_JAdbk4x812bIH0B9q3ydo6Wuz87JUBzrCSX

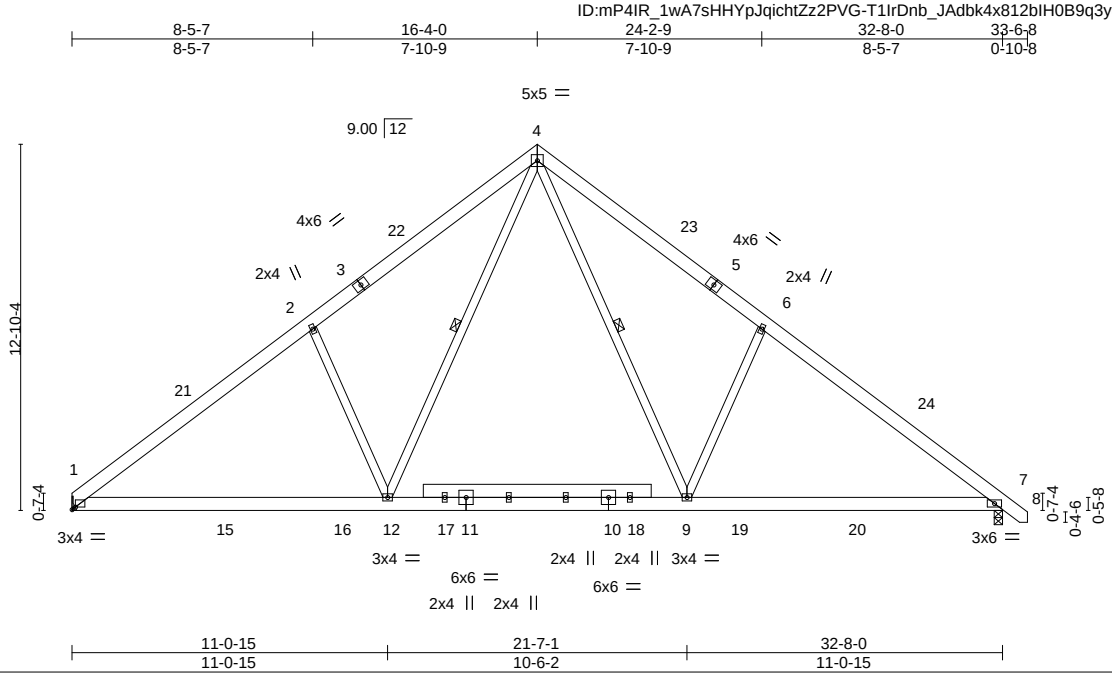


Plate Offsets (X,Y)-- [1:0-1-7,Edge]

| LOADING (psf) | | SPACING- 2-0-0 | | CSI. | | DEFL. | in | (loc) | l/defl | L/d | PLATES | GRIP |
|---|---|---|---|---|---|---|---|---|---|---|---|---|
| TCLL | 20.0 | Plate Grip DOL | 1.15 | TC | 0.31 | Vert(LL) | -0.14 | 9-12 | >999 | 360 | MT20 | 244/190 |
| TCDL | 10.0 | Lumber DOL | 1.15 | BC | 0.58 | Vert(CT) | -0.24 | 1-12 | >999 | 240 | | |
| BCLL | 0.0 * | Rep Stress Incr | YES | WB | 0.47 | Horz(CT) | 0.04 | 7 | n/a | n/a | | |
| BCDL | 10.0 | Code IRC2015/TPI2014 | | Matrix-S | | Wind(LL) | 0.05 | 7-9 | >999 | 240 | Weight: 252 lb | FT = 20% |

**LUMBER-**
TOP CHORD 2x6 SP No.1
BOT CHORD 2x6 SP No.1
WEBS 2x4 SP No.2

**BRACING-**
TOP CHORD Structural wood sheathing directly applied or 5-1-1 oc purlins.
BOT CHORD Rigid ceiling directly applied or 10-0-0 oc bracing.
WEBS 1 Row at midpt 4-12, 4-9

**REACTIONS.** (size) 1=Mechanical, 7=0-3-8
Max Horz 1=-303(LC 8)
Max Uplift 1=-63(LC 12), 7=-75(LC 13)
Max Grav 1=1533(LC 19), 7=1584(LC 20)

**FORCES.** (lb) - Max. Comp./Max. Ten. - All forces 250 (lb) or less except when shown.
TOP CHORD 1-2=-2062/380, 2-4=-1958/524, 4-6=-1950/514, 6-7=-2055/374
BOT CHORD 1-12=-142/1776, 9-12=0/1147, 7-9=-139/1585
WEBS 2-12=-584/357, 4-12=-213/1094, 4-9=-211/1079, 6-9=-575/350

**NOTES-**
1) Unbalanced roof live loads have been considered for this design.
2) Wind: ASCE 7-10; Vult=130mph Vasd=103mph; TCDL=6.0psf; BCDL=6.0psf; h=15ft; Cat. II; Exp C; Enclosed; MWFRS (envelope) and C-C Exterior(2) 0-1-0 to 4-5-13, Interior(1) 4-5-13 to 16-4-0, Exterior(2) 16-4-0 to 20-8-13, Interior(1) 20-8-13 to 33-4-13 zone;C-C for members and forces & MWFRS for reactions shown; Lumber DOL=1.60 plate grip DOL=1.60
3) This truss has been designed for a 10.0 psf bottom chord live load nonconcurrent with any other live loads.
4) * This truss has been designed for a live load of 30.0psf on the bottom chord in all areas where a rectangle 3-6-0 tall by 2-0-0 wide will fit between the bottom chord and any other members, with BCDL = 10.0psf.
5) Refer to girder(s) for truss to truss connections.
6) Provide mechanical connection (by others) of truss to bearing plate capable of withstanding 100 lb uplift at joint(s) 1, 7.


January 27,2022



ENGINEERING BY TRENCO A MiTek Affiliate
818 Soundside Road
Edenton, NC 27932

| Job | Truss | Truss Type | Qty | Ply | Cates\Lot 678 Lexington Plantation |
|---|---|---|---|---|---|
| J0222-0628 | A3A | FINK | 3 | 1 | I49924640<br>Job Reference (optional) |

Comtech, Inc, Fayetteville, NC - 28314, 8.430 s Aug 16 2021 MiTek Industries, Inc. Thu Jan 27 08:53:17 2022 Page 1
ID:mP4IR_1wA7sHHYpJqichtZz2PVG-yDsDQ7cd4TlSLEWKam6XqDjKaSHnXZm2Cots0dzrCSW

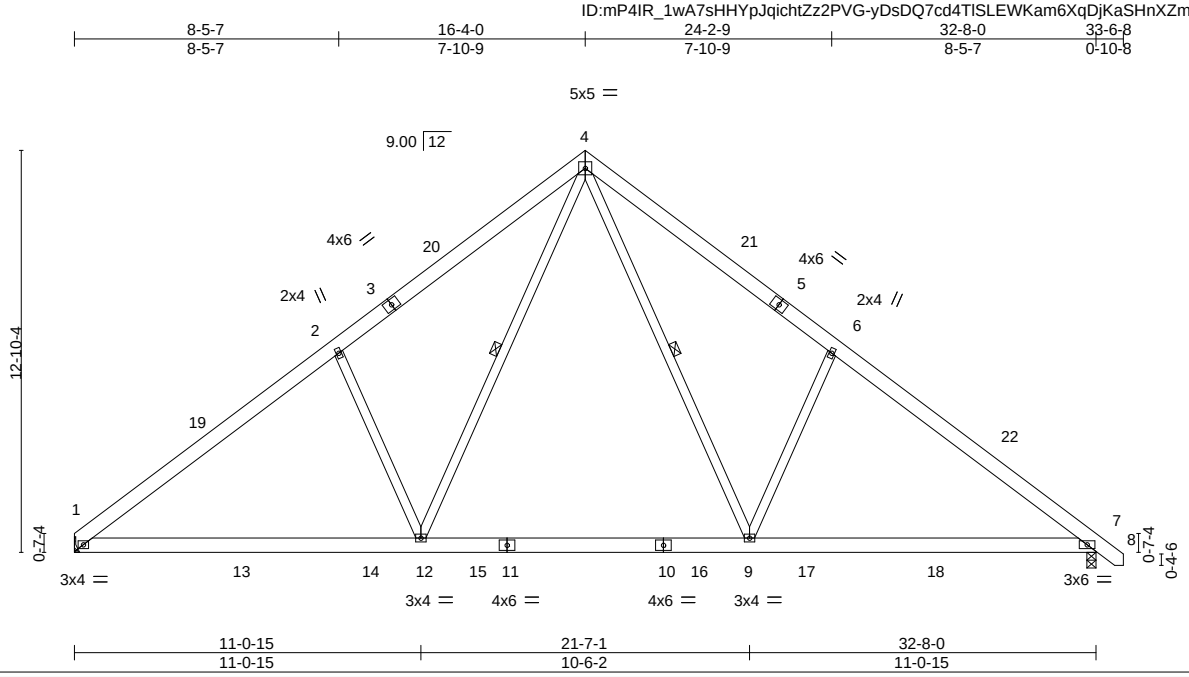


| LOADING (psf) | | SPACING- 2-0-0 | | CSI. | | DEFL. in (loc) l/defl L/d | | PLATES | GRIP |
|---|---|---|---|---|---|---|---|---|---|
| TCLL | 20.0 | Plate Grip DOL | 1.15 | TC | 0.31 | Vert(LL) -0.15 9-12 >999 360 | | MT20 | 244/190 |
| TCDL | 10.0 | Lumber DOL | 1.15 | BC | 0.58 | Vert(CT) -0.24 1-12 >999 240 | | | |
| BCLL | 0.0 * | Rep Stress Incr | YES | WB | 0.47 | Horz(CT) 0.04 7 n/a n/a | | | |
| BCDL | 10.0 | Code IRC2015/TPI2014 | | Matrix-S | | Wind(LL) 0.05 7-9 >999 240 | | Weight: 233 lb | FT = 20% |

**LUMBER-**
TOP CHORD 2x6 SP No.1
BOT CHORD 2x6 SP No.1
WEBS 2x4 SP No.2

**BRACING-**
TOP CHORD Structural wood sheathing directly applied or 5-0-14 oc purlins.
BOT CHORD Rigid ceiling directly applied or 10-0-0 oc bracing.
WEBS 1 Row at midpt 4-12, 4-9

**REACTIONS.** (size) 1=Mechanical, 7=0-3-8
Max Horz 1=-303(LC 8)
Max Uplift 1=-63(LC 12), 7=-75(LC 13)
Max Grav 1=1542(LC 19), 7=1593(LC 20)

**FORCES.** (lb) - Max. Comp./Max. Ten. - All forces 250 (lb) or less except when shown.
TOP CHORD 1-2=-2078/380, 2-4=-1974/524, 4-6=-1966/514, 6-7=-2071/374
BOT CHORD 1-12=-142/1788, 9-12=0/1156, 7-9=-139/1598
WEBS 2-12=-584/357, 4-12=-213/1105, 4-9=-211/1090, 6-9=-575/350

**NOTES-**
1) Unbalanced roof live loads have been considered for this design.
2) Wind: ASCE 7-10; Vult=130mph Vasd=103mph; TCDL=6.0psf; BCDL=6.0psf; h=15ft; Cat. II; Exp C; Enclosed; MWFRS (envelope) and C-C Exterior(2) 0-1-0 to 4-5-13, Interior(1) 4-5-13 to 16-4-0, Exterior(2) 16-4-0 to 20-8-13, Interior(1) 20-8-13 to 33-4-13 zone;C-C for members and forces & MWFRS for reactions shown; Lumber DOL=1.60 plate grip DOL=1.60
3) This truss has been designed for a 10.0 psf bottom chord live load nonconcurrent with any other live loads.
4) * This truss has been designed for a live load of 30.0psf on the bottom chord in all areas where a rectangle 3-6-0 tall by 2-0-0 wide will fit between the bottom chord and any other members, with BCDL = 10.0psf.
5) Refer to girder(s) for truss to truss connections.
6) Provide mechanical connection (by others) of truss to bearing plate capable of withstanding 100 lb uplift at joint(s) 1, 7.


January 27,2022



ENGINEERING BY TRENCO A MiTek Affiliate
818 Soundside Road
Edenton, NC 27932

| Job | Truss | Truss Type | Qty | Ply | Cates\Lot 678 Lexington Plantation |
|---|---|---|---|---|---|
| J0222-0628 | A3GE | GABLE | 1 | 1 | I49924641<br>Job Reference (optional) |

Comtech, Inc, Fayetteville, NC - 28314, 8.430 s Aug 16 2021 MiTek Industries, Inc. Thu Jan 27 08:53:18 2022 Page 1

ID:mP4IR_1wA7sHHYpJqichtZz2PVG-QQQbeTdFrntJzN4X8TdmNRGZYsmkG5gBQScQY3zrCSV

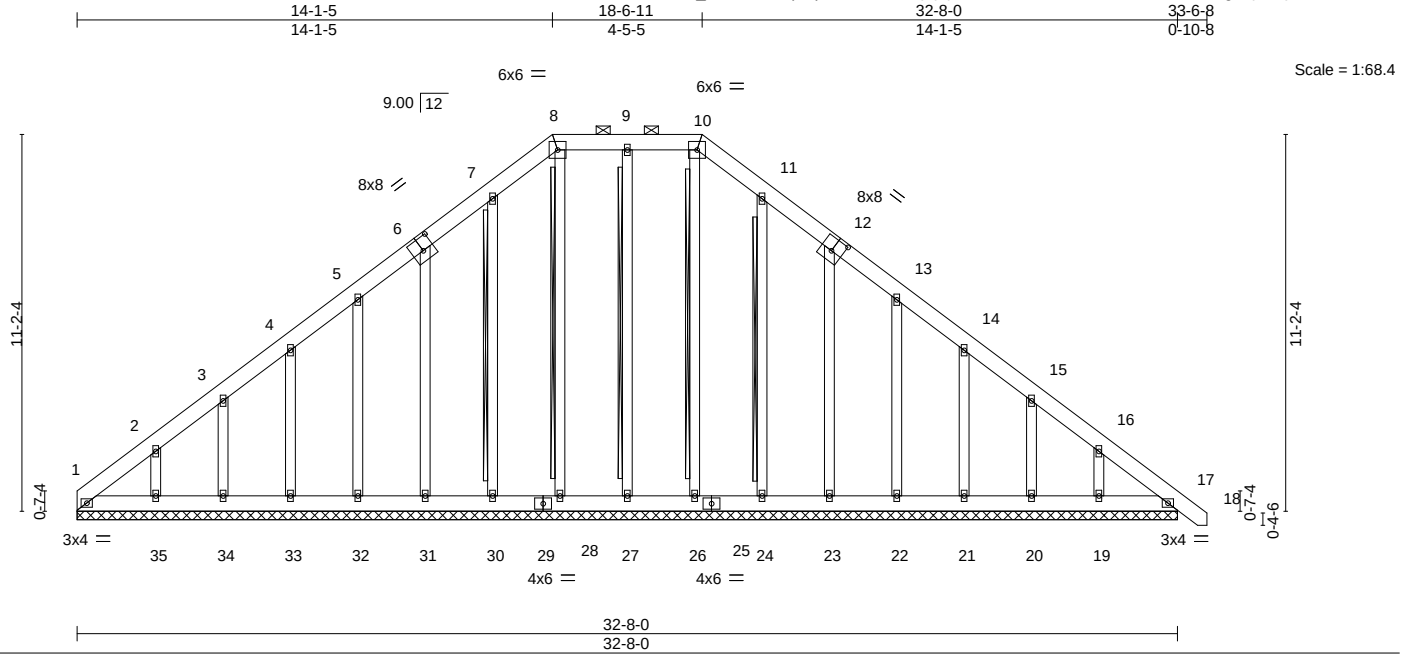


Plate Offsets (X,Y)-- [6:0-4-0,0-4-8], [12:0-4-0,0-4-8]

| LOADING (psf) | | SPACING- 2-0-0 | | CSI. | | DEFL. | in | (loc) | l/defl | L/d | PLATES | GRIP |
|---|---|---|---|---|---|---|---|---|---|---|---|---|
| TCLL | 20.0 | Plate Grip DOL | 1.15 | TC | 0.04 | Vert(LL) | 0.00 | 17 | n/r | 120 | MT20 | 244/190 |
| TCDL | 10.0 | Lumber DOL | 1.15 | BC | 0.02 | Vert(CT) | 0.00 | 17 | n/r | 120 | | |
| BCLL | 0.0 * | Rep Stress Incr | YES | WB | 0.17 | Horz(CT) | 0.01 | 17 | n/a | n/a | | |
| BCDL | 10.0 | Code IRC2015/TPI2014 | | Matrix-S | | | | | | | Weight: 311 lb | FT = 20% |

**LUMBER-**

TOP CHORD 2x6 SP No.1
BOT CHORD 2x6 SP No.1
OTHERS 2x4 SP No.2

**BRACING-**

TOP CHORD Structural wood sheathing directly applied or 6-0-0 oc purlins, except 2-0-0 oc purlins (6-0-0 max.): 8-10.
BOT CHORD Rigid ceiling directly applied or 10-0-0 oc bracing.
WEBS T-Brace: 2x4 SPF No.2 - 9-27, 8-28, 7-30, 10-26, 11-24
Fasten (2X) T and I braces to narrow edge of web with 10d (0.131"x3") nails, 6in o.c.,with 3in minimum end distance.
Brace must cover 90% of web length.

**REACTIONS.** All bearings 32-8-0.
(lb) - Max Horz 1=-265(LC 8)
Max Uplift All uplift 100 lb or less at joint(s) 1, 27, 30, 31, 32, 33, 34, 35, 24, 23, 22, 21, 20, 19, 17
Max Grav All reactions 250 lb or less at joint(s) 1, 27, 28, 30, 31, 32, 33, 34, 35, 26, 24, 23, 22, 21, 20, 19, 17

**FORCES.** (lb) - Max. Comp./Max. Ten. - All forces 250 (lb) or less except when shown.
TOP CHORD 6-7=-226/257, 7-8=-280/323, 8-9=-248/294, 9-10=-248/294, 10-11=-280/323, 11-12=-226/257

**NOTES-**

1) Unbalanced roof live loads have been considered for this design.
2) Wind: ASCE 7-10; Vult=130mph Vasd=103mph; TCDL=6.0psf; BCDL=6.0psf; h=15ft; Cat. II; Exp C; Enclosed; MWFRS (envelope) and C-C Corner(3) 0-0-0 to 4-4-0, Exterior(2) 4-4-0 to 14-2-4, Corner(3) 14-2-4 to 22-10-9, Exterior(2) 22-10-9 to 33-4-13 zone;C-C for members and forces & MWFRS for reactions shown; Lumber DOL=1.60 plate grip DOL=1.60
3) Truss designed for wind loads in the plane of the truss only. For studs exposed to wind (normal to the face), see Standard Industry Gable End Details as applicable, or consult qualified building designer as per ANSI/TPI 1.
4) Provide adequate drainage to prevent water ponding.
5) All plates are 2x4 MT20 unless otherwise indicated.
6) Gable requires continuous bottom chord bearing.
7) Gable studs spaced at 2-0-0 oc.
8) This truss has been designed for a 10.0 psf bottom chord live load nonconcurrent with any other live loads.
9) * This truss has been designed for a live load of 30.0psf on the bottom chord in all areas where a rectangle 3-6-0 tall by 2-0-0 wide will fit between the bottom chord and any other members.
10) Provide mechanical connection (by others) of truss to bearing plate capable of withstanding 100 lb uplift at joint(s) 1, 27, 30, 31, 32, 33, 34, 35, 24, 23, 22, 21, 20, 19, 17.
11) Graphical purlin representation does not depict the size or the orientation of the purlin along the top and/or bottom chord.
12) Warning: Additional permanent and stability bracing for truss system (not part of this component design) is always required.


January 27,2022



ENGINEERING BY TRENCO A MiTek Affiliate
818 Soundside Road
Edenton, NC 27932

| Job | Truss | Truss Type | Qty | Ply | Cates\Lot 678 Lexington Plantation |
|---|---|---|---|---|---|
| J0222-0628 | B1 | COMMON | 1 | 1 | I49924642 |
| | | | | | Job Reference (optional) |

Comtech, Inc, Fayetteville, NC - 28314, 8.430 s Aug 16 2021 MiTek Industries, Inc. Thu Jan 27 08:53:20 2022 Page 1
ID:mP4IR_1wA7sHHYpJqichtZz2PVG-MoXL29eVNO71ChEvGufESsLrZgQ1ktyUum5WdyzrCST

-0-10-8 | 7-6-1 | 15-0-0 | 22-5-15 | 30-0-0 | 30-10-8
0-10-8 | 7-6-1 | 7-5-15 | 7-5-15 | 7-6-1 | 0-10-8

Scale = 1:55.7

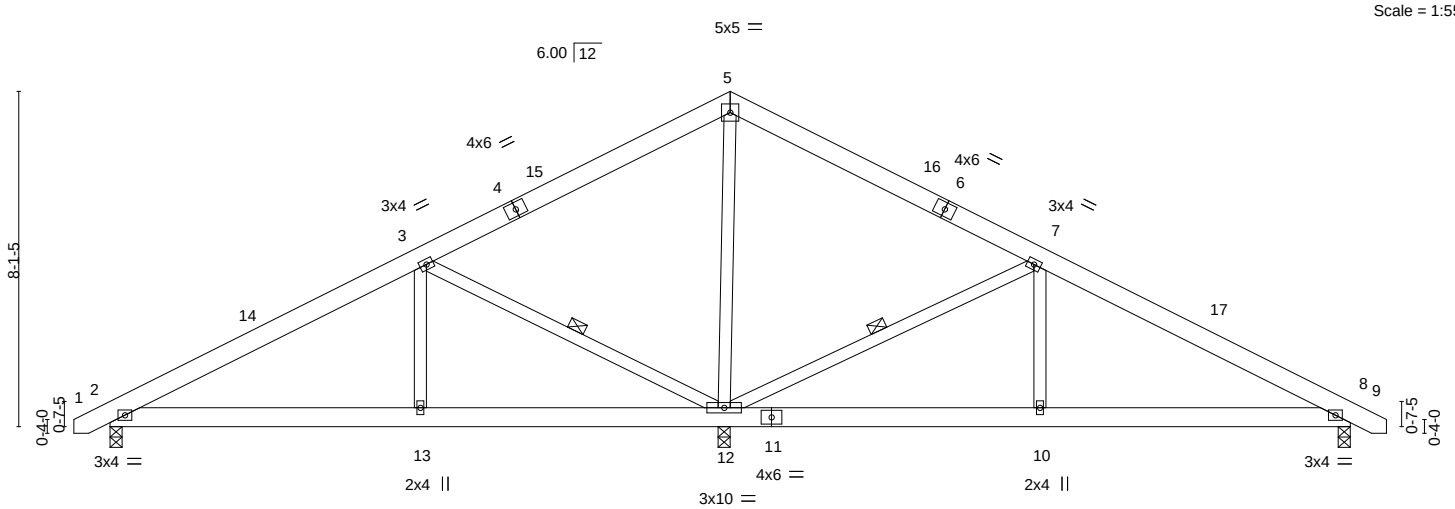


7-6-1 | 14-10-4 | 22-5-15 | 30-0-0
7-6-1 | 7-4-3 | 7-7-11 | 7-6-1

| LOADING (psf) | | SPACING- 2-0-0 | | CSI. | | DEFL. | in | (loc) | l/defl | L/d | PLATES | GRIP |
|---|---|---|---|---|---|---|---|---|---|---|---|---|
| TCLL | 20.0 | Plate Grip DOL | 1.15 | TC | 0.26 | Vert(LL) | -0.02 | 2-13 | >999 | 360 | MT20 | 244/190 |
| TCDL | 10.0 | Lumber DOL | 1.15 | BC | 0.16 | Vert(CT) | -0.05 | 2-13 | >999 | 240 | | |
| BCLL | 0.0 * | Rep Stress Incr | YES | WB | 0.69 | Horz(CT) | 0.01 | 8 | n/a | n/a | | |
| BCDL | 10.0 | Code IRC2015/TPI2014 | | Matrix-S | | Wind(LL) | 0.04 | 8-10 | >999 | 240 | Weight: 198 lb | FT = 20% |

**LUMBER-**

| | |
|---|---|
| TOP CHORD | 2x6 SP No.1 |
| BOT CHORD | 2x6 SP No.1 |
| WEBS | 2x4 SP No.2 |

**BRACING-**

| | |
|---|---|
| TOP CHORD | Structural wood sheathing directly applied or 6-0-0 oc purlins. |
| BOT CHORD | Rigid ceiling directly applied or 10-0-0 oc bracing. |
| WEBS | 1 Row at midpt 7-12, 3-12 |

**REACTIONS.** (size) 2=0-3-8, 12=0-3-8, 8=0-3-8
Max Horz 2=102(LC 11)
Max Uplift 2=-52(LC 12), 12=-103(LC 9), 8=-152(LC 8)
Max Grav 2=503(LC 23), 12=1542(LC 1), 8=516(LC 24)

**FORCES.** (lb) - Max. Comp./Max. Ten. - All forces 250 (lb) or less except when shown.
TOP CHORD 2-3=-550/64, 3-5=-117/447, 5-7=-113/432, 7-8=-579/458
BOT CHORD 2-13=-69/412, 12-13=-69/412, 10-12=-305/437, 8-10=-305/437
WEBS 5-12=-710/281, 7-12=-754/698, 7-10=-316/325, 3-12=-742/228, 3-13=0/316

**NOTES-**
1) Unbalanced roof live loads have been considered for this design.
2) Wind: ASCE 7-10; Vult=130mph Vasd=103mph; TCDL=6.0psf; BCDL=6.0psf; h=15ft; Cat. II; Exp C; Enclosed; MWFRS (envelope) and C-C Exterior(2) -0-8-6 to 3-8-7, Interior(1) 3-8-7 to 15-0-0, Exterior(2) 15-0-0 to 19-4-13, Interior(1) 19-4-13 to 30-8-6 zone; porch right exposed;C-C for members and forces & MWFRS for reactions shown; Lumber DOL=1.60 plate grip DOL=1.60
3) This truss has been designed for a 10.0 psf bottom chord live load nonconcurrent with any other live loads.
4) * This truss has been designed for a live load of 30.0psf on the bottom chord in all areas where a rectangle 3-6-0 tall by 2-0-0 wide will fit between the bottom chord and any other members.
5) Provide mechanical connection (by others) of truss to bearing plate capable of withstanding 100 lb uplift at joint(s) 2 except (jt=lb) 12=103, 8=152.

NORTH CAROLINA PROFESSIONAL SEAL 036322 ENGINEER ERIC A. GILBERT

January 27,2022



ENGINEERING BY TRENCO A MiTek Affiliate
818 Soundside Road
Edenton, NC 27932

| Job | Truss | Truss Type | Qty | Ply | Cates\Lot 678 Lexington Plantation |
|---|---|---|---|---|---|
| J0222-0628 | B1GE | GABLE | 1 | 1 | I49924643 |
| | | | | | Job Reference (optional) |

Comtech, Inc, Fayetteville, NC - 28314, 8.430 s Aug 16 2021 MiTek Industries, Inc. Thu Jan 27 08:53:21 2022 Page 1
ID:mP4IR_1wA7sHHYpJqichtZz2PVG-q?5kGUf78iFuqrp6pcAT_3u0J4lGTKCd7Pr49OzrCSS

-0-10-8 | 7-6-1 | 15-0-0 | 22-5-15 | 30-0-0 | 30-10-8
0-10-8 | 7-6-1 | 7-5-15 | 7-5-15 | 7-6-1 | 0-10-8

Scale = 1:55.7

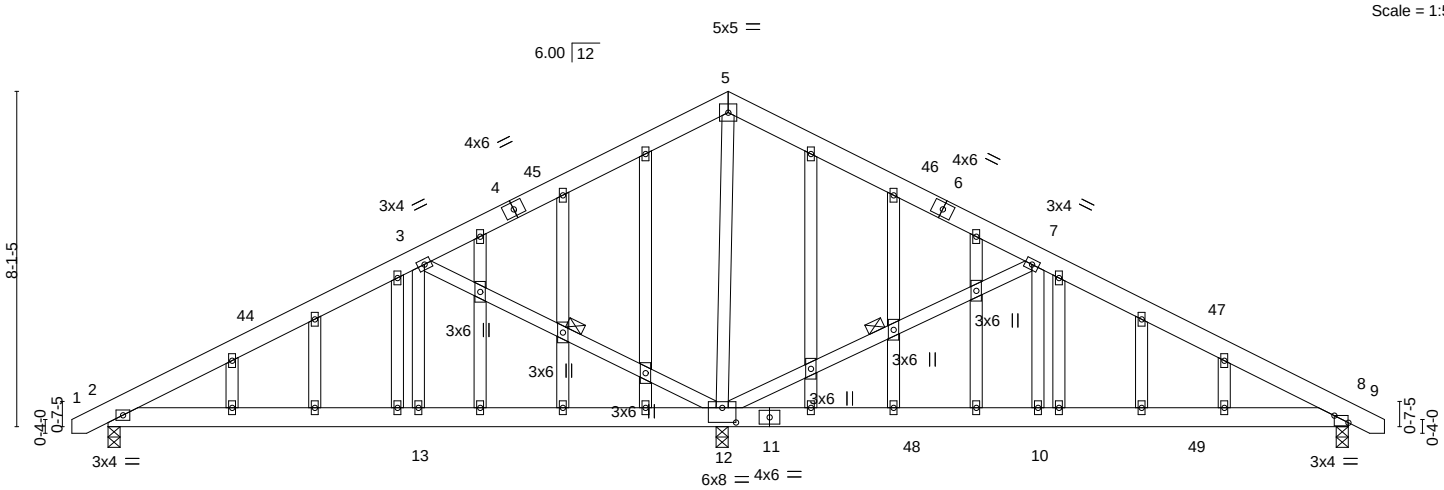


7-6-1 | 14-10-4 | 22-5-15 | 30-0-0
7-6-1 | 7-4-3 | 7-7-11 | 7-6-1

Plate Offsets (X,Y)-- [8:0-4-1,Edge], [12:0-4-0,0-4-4]

| LOADING (psf) | | SPACING- | 2-0-0 | CSI. | | DEFL. | in | (loc) | l/defl | L/d | PLATES | GRIP |
|---|---|---|---|---|---|---|---|---|---|---|---|---|
| TCLL | 20.0 | Plate Grip DOL | 1.15 | TC | 0.26 | Vert(LL) | 0.05 | 8-10 | >999 | 240 | MT20 | 244/190 |
| TCDL | 10.0 | Lumber DOL | 1.15 | BC | 0.16 | Vert(CT) | -0.05 | 2-13 | >999 | 240 | | |
| BCLL | 0.0 * | Rep Stress Incr | YES | WB | 0.69 | Horz(CT) | 0.01 | 8 | n/a | n/a | | |
| BCDL | 10.0 | Code IRC2015/TPI2014 | | Matrix-S | | | | | | | Weight: 263 lb | FT = 20% |

**LUMBER-**
TOP CHORD 2x6 SP No.1
BOT CHORD 2x6 SP No.1
WEBS 2x4 SP No.2
OTHERS 2x4 SP No.2

**BRACING-**
TOP CHORD Structural wood sheathing directly applied or 6-0-0 oc purlins.
BOT CHORD Rigid ceiling directly applied or 10-0-0 oc bracing.
WEBS 1 Row at midpt 7-12, 3-12

**REACTIONS.** (size) 2=0-3-8, 12=0-3-8, 8=0-3-8
Max Horz 2=-159(LC 13)
Max Uplift 2=-132(LC 12), 12=-269(LC 12), 8=-185(LC 8)
Max Grav 2=503(LC 23), 12=1542(LC 1), 8=516(LC 24)

**FORCES.** (lb) - Max. Comp./Max. Ten. - All forces 250 (lb) or less except when shown.
TOP CHORD 2-3=-550/123, 3-5=-153/447, 5-7=-145/432, 7-8=-579/549
BOT CHORD 2-13=-159/412, 12-13=-159/412, 10-12=-337/437, 8-10=-337/437
WEBS 5-12=-710/444, 7-12=-754/883, 7-10=-307/325, 3-12=-742/436, 3-13=0/316

**NOTES-**
1) Unbalanced roof live loads have been considered for this design.
2) Wind: ASCE 7-10; Vult=130mph Vasd=103mph; TCDL=6.0psf; BCDL=6.0psf; h=15ft; Cat. II; Exp C; Enclosed; MWFRS (envelope) gable end zone and C-C Corner(3) -0-8-6 to 3-8-7, Exterior(2) 3-8-7 to 15-0-0, Corner(3) 15-0-0 to 19-4-13, Exterior(2) 19-4-13 to 30-8-6 zone; porch right exposed;C-C for members and forces & MWFRS for reactions shown; Lumber DOL=1.60 plate grip DOL=1.60
3) Truss designed for wind loads in the plane of the truss only. For studs exposed to wind (normal to the face), see Standard Industry Gable End Details as applicable, or consult qualified building designer as per ANSI/TPI 1.
4) All plates are 2x4 MT20 unless otherwise indicated.
5) Gable studs spaced at 2-0-0 oc.
6) This truss has been designed for a 10.0 psf bottom chord live load nonconcurrent with any other live loads.
7) * This truss has been designed for a live load of 30.0psf on the bottom chord in all areas where a rectangle 3-6-0 tall by 2-0-0 wide will fit between the bottom chord and any other members.
8) Provide mechanical connection (by others) of truss to bearing plate capable of withstanding 100 lb uplift at joint(s) except (jt=lb) 2=132, 12=269, 8=185.


January 27,2022



ENGINEERING BY TRENCO A MiTek Affiliate
818 Soundside Road
Edenton, NC 27932

| Job | Truss | Truss Type | Qty | Ply | Cates\Lot 678 Lexington Plantation |
|---|---|---|---|---|---|
| J0222-0628 | B2 | ROOF SPECIAL | 3 | 1 | I49924644<br>Job Reference (optional) |

Comtech, Inc, Fayetteville, NC - 28314, 8.430 s Aug 16 2021 MiTek Industries, Inc. Thu Jan 27 08:53:22 2022 Page 1
ID:mP4IR_1wA7sHHYpJqichtZz2PVG-IBf6TqglvNIS?OINJhiXHQBsT4lCldnL3adhrzrCSR

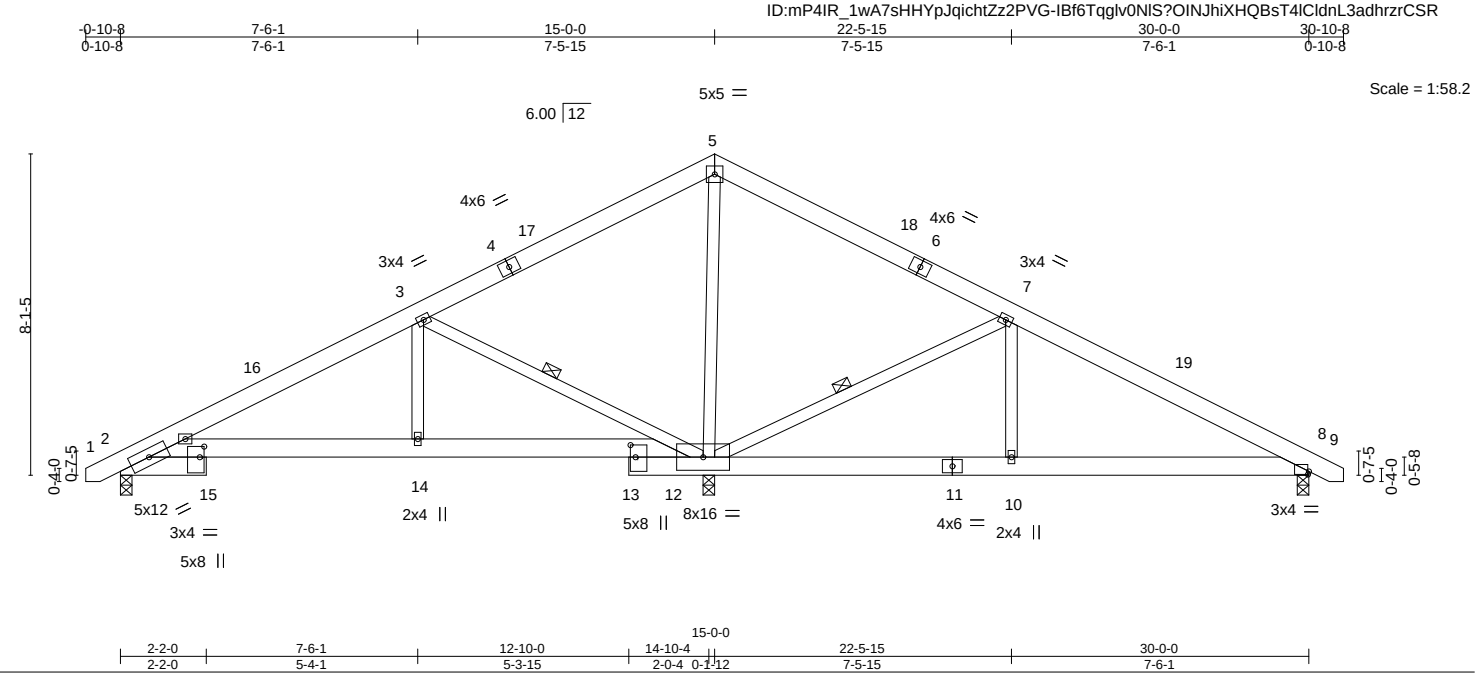


Plate Offsets (X,Y)-- [8:0-0-5,0-0-15], [13:0-3-11,0-1-8], [15:0-3-4,0-1-5]

| LOADING (psf) | | SPACING- 2-0-0 | | CSI. | | DEFL. | in | (loc) | l/defl | L/d | PLATES | GRIP |
|---|---|---|---|---|---|---|---|---|---|---|---|---|
| TCLL | 20.0 | Plate Grip DOL | 1.15 | TC | 0.28 | Vert(LL) | 0.05 | 10-12 | >999 | 240 | MT20 | 244/190 |
| TCDL | 10.0 | Lumber DOL | 1.15 | BC | 0.21 | Vert(CT) | -0.05 | 2-14 | >999 | 240 | | |
| BCLL | 0.0 * | Rep Stress Incr | YES | WB | 0.81 | Horz(CT) | 0.01 | 8 | n/a | n/a | | |
| BCDL | 10.0 | Code IRC2015/TPI2014 | | Matrix-S | | | | | | | Weight: 205 lb | FT = 20% |

**LUMBER-**
TOP CHORD 2x6 SP No.1
BOT CHORD 2x6 SP No.1
WEBS 2x4 SP No.2

**BRACING-**
TOP CHORD Structural wood sheathing directly applied or 6-0-0 oc purlins.
BOT CHORD Rigid ceiling directly applied or 6-0-0 oc bracing.
WEBS 1 Row at midpt 3-12, 7-12

**REACTIONS.** (size) 2=0-3-8, 12=0-3-8, 8=0-3-8
Max Horz 2=-107(LC 10)
Max Uplift 2=-41(LC 12), 12=-96(LC 9), 8=-193(LC 8)
Max Grav 2=392(LC 23), 12=1649(LC 1), 8=539(LC 24)

**FORCES.** (lb) - Max. Comp./Max. Ten. - All forces 250 (lb) or less except when shown.
TOP CHORD 2-3=-347/88, 3-5=-70/630, 5-7=-44/495, 7-8=-630/591
BOT CHORD 10-12=-416/485, 8-10=-416/482
WEBS 5-12=-831/238, 3-14=0/282, 3-12=-740/196, 7-12=-788/729, 7-10=-315/339

**NOTES-**
1) Unbalanced roof live loads have been considered for this design.
2) Wind: ASCE 7-10; Vult=130mph Vasd=103mph; TCDL=6.0psf; BCDL=6.0psf; h=15ft; Cat. II; Exp C; Enclosed; MWFRS (envelope) and C-C Exterior(2) -0-8-6 to 3-8-7, Interior(1) 3-8-7 to 15-0-0, Exterior(2) 15-0-0 to 19-4-13, Interior(1) 19-4-13 to 30-8-6 zone; porch right exposed;C-C for members and forces & MWFRS for reactions shown; Lumber DOL=1.60 plate grip DOL=1.60
3) This truss has been designed for a 10.0 psf bottom chord live load nonconcurrent with any other live loads.
4) * This truss has been designed for a live load of 30.0psf on the bottom chord in all areas where a rectangle 3-6-0 tall by 2-0-0 wide will fit between the bottom chord and any other members.
5) Provide mechanical connection (by others) of truss to bearing plate capable of withstanding 100 lb uplift at joint(s) 2, 12 except (jt=lb) 8=193.

NORTH CAROLINA PROFESSIONAL SEAL 036322 ENGINEER ERIC A. GILBERT

January 27,2022



ENGINEERING BY TRENCO A MiTek Affiliate
818 Soundside Road
Edenton, NC 27932

| Job | Truss | Truss Type | Qty | Ply | Cates\Lot 678 Lexington Plantation |
|---|---|---|---|---|---|
| J0222-0628 | B3 | ROOF SPECIAL | 2 | 1 | I49924645<br>Job Reference (optional) |

Comtech, Inc, Fayetteville, NC - 28314, 8.430 s Aug 16 2021 MiTek Industries, Inc. Thu Jan 27 08:53:23 2022 Page 1
ID:mP4IR_1wA7sHHYpJqichtZz2PVG-mNDUhAhNgJWc39zUx0Dx4UzMDtHUxK1wajKAEHzrCSQ

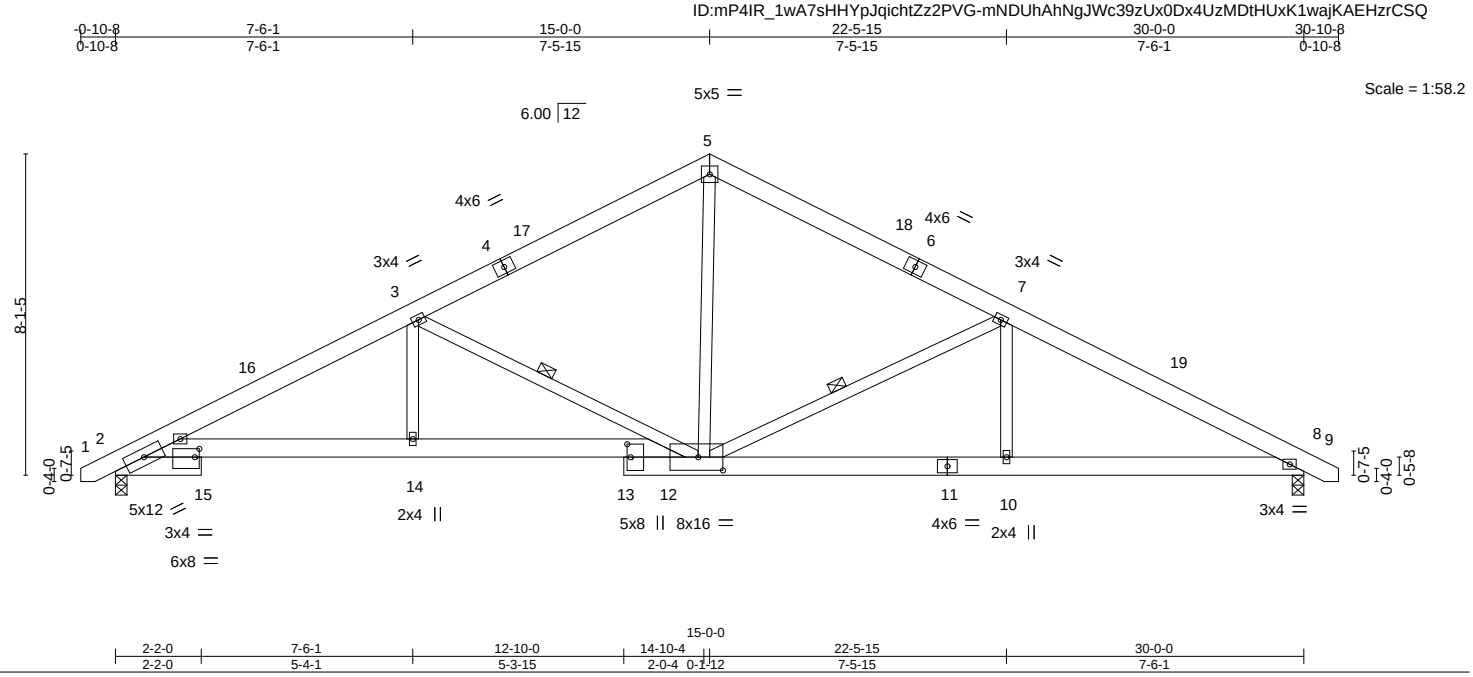


Plate Offsets (X,Y)-- [12:0-7-8,0-4-0], [13:0-3-15,0-1-0], [15:0-1-6,0-2-9]

| LOADING (psf) | | SPACING- | 2-0-0 | CSI. | | DEFL. | in | (loc) | l/defl | L/d | PLATES | GRIP |
|---|---|---|---|---|---|---|---|---|---|---|---|---|
| TCLL | 20.0 | Plate Grip DOL | 1.15 | TC | 0.30 | Vert(LL) | -0.09 | 12-14 | >999 | 360 | MT20 | 244/190 |
| TCDL | 10.0 | Lumber DOL | 1.15 | BC | 0.82 | Vert(CT) | -0.18 | 2-14 | >999 | 240 | | |
| BCLL | 0.0 * | Rep Stress Incr | YES | WB | 0.29 | Horz(CT) | 0.08 | 8 | n/a | n/a | | |
| BCDL | 10.0 | Code IRC2015/TPI2014 | | Matrix-S | | Wind(LL) | 0.07 | 2-14 | >999 | 240 | Weight: 205 lb | FT = 20% |

**LUMBER-**
TOP CHORD 2x6 SP No.1
BOT CHORD 2x6 SP No.1
WEBS 2x4 SP No.2

**BRACING-**
TOP CHORD Structural wood sheathing directly applied or 4-7-5 oc purlins.
BOT CHORD Rigid ceiling directly applied or 10-0-0 oc bracing.
WEBS 1 Row at midpt 3-12, 7-12

**REACTIONS.** (size) 2=0-3-8, 8=0-3-8
Max Horz 2=-102(LC 10)
Max Uplift 2=-83(LC 12), 8=-83(LC 13)
Max Grav 2=1239(LC 1), 8=1239(LC 1)

**FORCES.** (lb) - Max. Comp./Max. Ten. - All forces 250 (lb) or less except when shown.
TOP CHORD 2-3=-2418/509, 3-5=-1567/415, 5-7=-1430/397, 7-8=-2097/443
BOT CHORD 2-14=-347/2087, 12-14=-344/2087, 10-12=-290/1782, 8-10=-290/1778
WEBS 5-12=-126/842, 3-14=0/442, 3-12=-901/286, 7-12=-690/228, 7-10=0/287

**NOTES-**
1) Unbalanced roof live loads have been considered for this design.
2) Wind: ASCE 7-10; Vult=130mph Vasd=103mph; TCDL=6.0psf; BCDL=6.0psf; h=15ft; Cat. II; Exp C; Enclosed; MWFRS (envelope) and C-C Exterior(2) -0-8-6 to 3-8-7, Interior(1) 3-8-7 to 15-0-0, Exterior(2) 15-0-0 to 19-4-13, Interior(1) 19-4-13 to 30-8-6 zone;C-C for members and forces & MWFRS for reactions shown; Lumber DOL=1.60 plate grip DOL=1.60
3) This truss has been designed for a 10.0 psf bottom chord live load nonconcurrent with any other live loads.
4) * This truss has been designed for a live load of 30.0psf on the bottom chord in all areas where a rectangle 3-6-0 tall by 2-0-0 wide will fit between the bottom chord and any other members.
5) Provide mechanical connection (by others) of truss to bearing plate capable of withstanding 100 lb uplift at joint(s) 2, 8.

NORTH CAROLINA PROFESSIONAL SEAL 036322 ENGINEER ERIC A. GILBERT

January 27,2022



ENGINEERING BY TRENCO A MiTek Affiliate
818 Soundside Road
Edenton, NC 27932

| Job | Truss | Truss Type | Qty | Ply | Cates\Lot 678 Lexington Plantation |
|---|---|---|---|---|---|
| J0222-0628 | B4 | FINK | 7 | 1 | I49924646<br>Job Reference (optional) |

Comtech, Inc, Fayetteville, NC - 28314, 8.430 s Aug 16 2021 MiTek Industries, Inc. Thu Jan 27 08:53:24 2022 Page 1
ID:mP4IR_1wA7sHHYpJqichtZz2PVG-EansuWh0QdeShIYhVkkAciWR?HjVgj_4pN3kmjzrCSP

| -0-10-8 | 5-8-5 | 10-9-12 | 15-0-0 | 19-2-4 | 24-3-11 | 30-0-0 | 30-10-8 |
|---|---|---|---|---|---|---|---|
| 0-10-8 | 5-8-5 | 5-1-7 | 4-2-4 | 4-2-4 | 5-1-7 | 5-8-5 | 0-10-8 |

Scale = 1:58.6

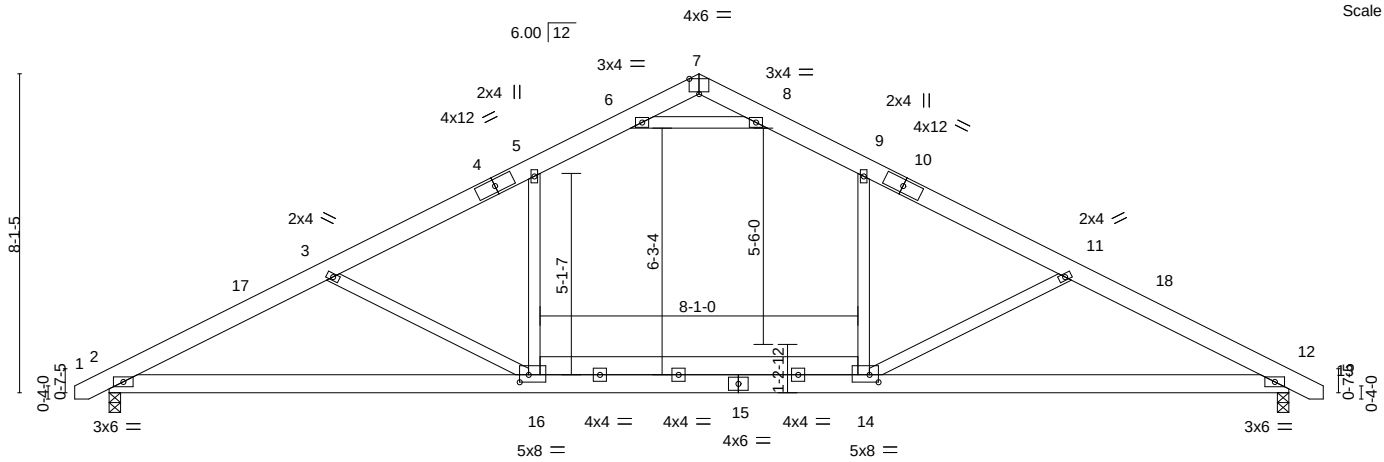


| 10-9-12 | 19-2-4 | 30-0-0 |
|---|---|---|
| 10-9-12 | 8-4-8 | 10-9-12 |

Plate Offsets (X,Y)-- [7:0-3-0,Edge], [14:0-2-12,0-2-4], [16:0-2-12,0-2-4]

| LOADING (psf) | | SPACING- 2-0-0 | | CSI. | | DEFL. | in | (loc) | l/defl | L/d | PLATES | GRIP |
|---|---|---|---|---|---|---|---|---|---|---|---|---|
| TCLL | 20.0 | Plate Grip DOL | 1.15 | TC | 0.68 | Vert(LL) | -0.21 | 12-14 | >999 | 360 | MT20 | 244/190 |
| TCDL | 10.0 | Lumber DOL | 1.15 | BC | 0.45 | Vert(CT) | -0.34 | 12-14 | >999 | 240 | | |
| BCLL | 0.0 * | Rep Stress Incr | YES | WB | 0.50 | Horz(CT) | 0.05 | 12 | n/a | n/a | | |
| BCDL | 10.0 | Code IRC2015/TPI2014 | | Matrix-S | | Wind(LL) | 0.14 | 2-16 | >999 | 240 | Weight: 210 lb | FT = 20% |

**LUMBER-**
TOP CHORD 2x6 SP No.1
BOT CHORD 2x6 SP No.1
WEBS 2x4 SP No.2 *Except*
14-16: 2x6 SP No.1

**BRACING-**
TOP CHORD Structural wood sheathing directly applied or 4-7-14 oc purlins.
BOT CHORD Rigid ceiling directly applied or 10-0-0 oc bracing.

**REACTIONS.** (size) 2=0-3-8, 12=0-3-8
Max Horz 2=102(LC 11)
Max Uplift 2=-83(LC 12), 12=-83(LC 13)
Max Grav 2=1270(LC 2), 12=1270(LC 2)

**FORCES.** (lb) - Max. Comp./Max. Ten. - All forces 250 (lb) or less except when shown.
TOP CHORD 2-3=-2267/511, 3-5=-1891/397, 5-6=-1499/410, 6-7=-112/844, 7-8=-112/844, 8-9=-1499/410, 9-11=-1891/397, 11-12=-2267/511
BOT CHORD 2-16=-357/2017, 14-16=-144/1576, 12-14=-348/1978
WEBS 3-16=-566/246, 5-16=-4/607, 9-14=-4/609, 11-14=-566/246, 6-8=-2515/561

**NOTES-**
1) Unbalanced roof live loads have been considered for this design.
2) Wind: ASCE 7-10; Vult=130mph Vasd=103mph; TCDL=6.0psf; BCDL=6.0psf; h=15ft; Cat. II; Exp C; Enclosed; MWFRS (envelope) and C-C Exterior(2) -0-8-6 to 3-8-7, Interior(1) 3-8-7 to 15-0-0, Exterior(2) 15-0-0 to 19-2-4, Interior(1) 19-2-4 to 30-8-6 zone;C-C for members and forces & MWFRS for reactions shown; Lumber DOL=1.60 plate grip DOL=1.60
3) This truss has been designed for a 10.0 psf bottom chord live load nonconcurrent with any other live loads.
4) * This truss has been designed for a live load of 30.0psf on the bottom chord in all areas where a rectangle 3-6-0 tall by 2-0-0 wide will fit between the bottom chord and any other members, with BCDL = 10.0psf.
5) Provide mechanical connection (by others) of truss to bearing plate capable of withstanding 100 lb uplift at joint(s) 2, 12.


January 27,2022



ENGINEERING BY TRENCO A MiTek Affiliate
818 Soundside Road
Edenton, NC 27932

| Job | Truss | Truss Type | Qty | Ply | Cates\Lot 678 Lexington Plantation |
|---|---|---|---|---|---|
| J0222-0628 | C1 | HIP GIRDER | 1 | 2 | I49924647<br>Job Reference (optional) |

Comtech, Inc, Fayetteville, NC - 28314, 8.430 s Aug 16 2021 MiTek Industries, Inc. Thu Jan 27 08:53:25 2022 Page 1
ID:mP4IR_1wA7sHHYpJqichtZz2PVG-jmLE6sieBxmJJS7t2RFP9v2hRh30P5vD11pHIAzrCSO

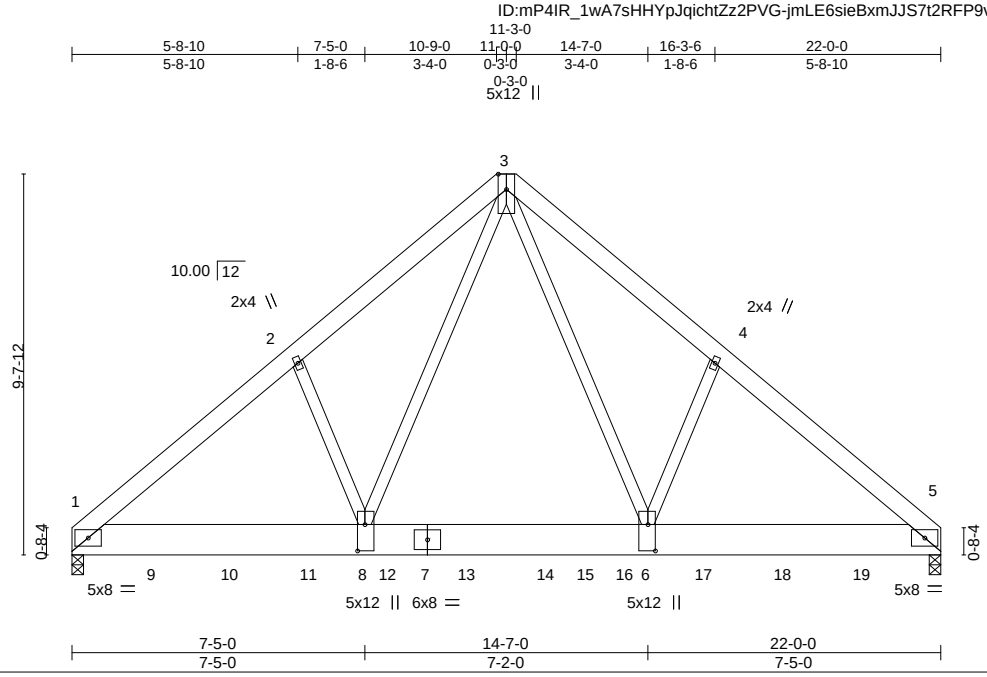


Plate Offsets (X,Y)-- [6:0-8-0,0-2-4], [8:0-8-0,0-2-4]

| LOADING (psf) | | SPACING- 2-0-0 | | CSI. | | DEFL. | in | (loc) | l/defl | L/d | PLATES | GRIP |
|---|---|---|---|---|---|---|---|---|---|---|---|---|
| TCLL | 20.0 | Plate Grip DOL | 1.15 | TC | 0.32 | Vert(LL) | -0.11 | 6-8 | >999 | 360 | MT20 | 244/190 |
| TCDL | 10.0 | Lumber DOL | 1.15 | BC | 0.43 | Vert(CT) | -0.19 | 6-8 | >999 | 240 | | |
| BCLL | 0.0 * | Rep Stress Incr | NO | WB | 0.78 | Horz(CT) | 0.03 | 5 | n/a | n/a | | |
| BCDL | 10.0 | Code IRC2015/TPI2014 | | Matrix-S | | Wind(LL) | 0.06 | 6-8 | >999 | 240 | Weight: 390 lb | FT = 20% |

**LUMBER-**
TOP CHORD 2x6 SP No.1
BOT CHORD 2x10 SP 2400F 2.0E
WEBS 2x4 SP No.2

**BRACING-**
TOP CHORD Structural wood sheathing directly applied or 5-1-13 oc purlins.
BOT CHORD Rigid ceiling directly applied or 10-0-0 oc bracing.

**REACTIONS.** (size) 1=0-3-8, 5=0-3-8
Max Horz 1=-220(LC 25)
Max Uplift 1=-413(LC 8), 5=-409(LC 9)
Max Grav 1=8093(LC 2), 5=8043(LC 2)

**FORCES.** (lb) - Max. Comp./Max. Ten. - All forces 250 (lb) or less except when shown.
TOP CHORD 1-2=-9663/527, 2-3=-9505/623, 3-4=-9485/622, 4-5=-9643/525
BOT CHORD 1-8=-414/7295, 6-8=-210/4973, 5-6=-337/7280
WEBS 3-8=-421/6324, 3-6=-418/6282, 2-8=-317/300, 4-6=-317/301

**NOTES-**
1) 2-ply truss to be connected together with 10d (0.131"x3") nails as follows:
Top chords connected as follows: 2x6 - 2 rows staggered at 0-9-0 oc.
Bottom chords connected as follows: 2x10 - 2 rows staggered at 0-7-0 oc.
Webs connected as follows: 2x4 - 1 row at 0-9-0 oc.
2) All loads are considered equally applied to all plies, except if noted as front (F) or back (B) face in the LOAD CASE(S) section. Ply to ply connections have been provided to distribute only loads noted as (F) or (B), unless otherwise indicated.
3) Unbalanced roof live loads have been considered for this design.
4) Wind: ASCE 7-10; Vult=130mph Vasd=103mph; TCDL=6.0psf; BCDL=6.0psf; h=15ft; Cat. II; Exp C; Enclosed; MWFRS (envelope); Lumber DOL=1.60 plate grip DOL=1.60
5) This truss has been designed for a 10.0 psf bottom chord live load nonconcurrent with any other live loads.
6) * This truss has been designed for a live load of 30.0psf on the bottom chord in all areas where a rectangle 3-6-0 tall by 2-0-0 wide will fit between the bottom chord and any other members, with BCDL = 10.0psf.
7) Provide mechanical connection (by others) of truss to bearing plate capable of withstanding 100 lb uplift at joint(s) except (jt=lb) 1=413, 5=409.
8) Hanger(s) or other connection device(s) shall be provided sufficient to support concentrated load(s) 1450 lb down and 83 lb up at 2-0-12, 1450 lb down and 83 lb up at 3-11-4, 1450 lb down and 83 lb up at 5-11-4, 1450 lb down and 83 lb up at 7-11-4, 1408 lb down and 83 lb up at 9-11-4, 1405 lb down and 83 lb up at 11-11-4, 1450 lb down and 83 lb up at 13-11-4, 1459 lb down and 83 lb up at 15-11-4, and 1459 lb down and 83 lb up at 17-11-4, and 1459 lb down and 83 lb up at 19-11-4 on bottom chord. The design/selection of such connection device(s) is the responsibility of others.

**LOAD CASE(S)** Standard
1) Dead + Roof Live (balanced): Lumber Increase=1.15, Plate Increase=1.15
Uniform Loads (plf)
Vert: 1-3=-60, 3-5=-60, 1-5=-20


January 27,2022

Continued on page 2



ENGINEERING BY TRENCO A MiTek Affiliate
818 Soundside Road
Edenton, NC 27932

**LOAD CASE(S)** Standard

Concentrated Loads (lb)

Vert: 9=-1277(B) 10=-1277(B) 11=-1277(B) 12=-1277(B) 13=-1277(B) 14=-1277(B) 16=-1277(B) 17=-1277(B) 18=-1277(B) 19=-1277(B)


January 27,2022




ENGINEERING BY TRENCO A MiTek Affiliate
818 Soundside Road
Edenton, NC 27932

| Job | Truss | Truss Type | Qty | Ply | Cates\Lot 678 Lexington Plantation |
|---|---|---|---|---|---|
| J0222-0628 | C1GE | GABLE | 1 | 1 | I49924648 |
| | | | | | Job Reference (optional) |

Comtech, Inc, Fayetteville, NC - 28314, 8.430 s Aug 16 2021 MiTek Industries, Inc. Thu Jan 27 08:53:26 2022 Page 1
ID:mP4IR_1wA7sHHYpJqichtZz2PVG-ByvdJCjGyEuAwci3c9meh7bvA5T68hyNGhYrqczrCSN

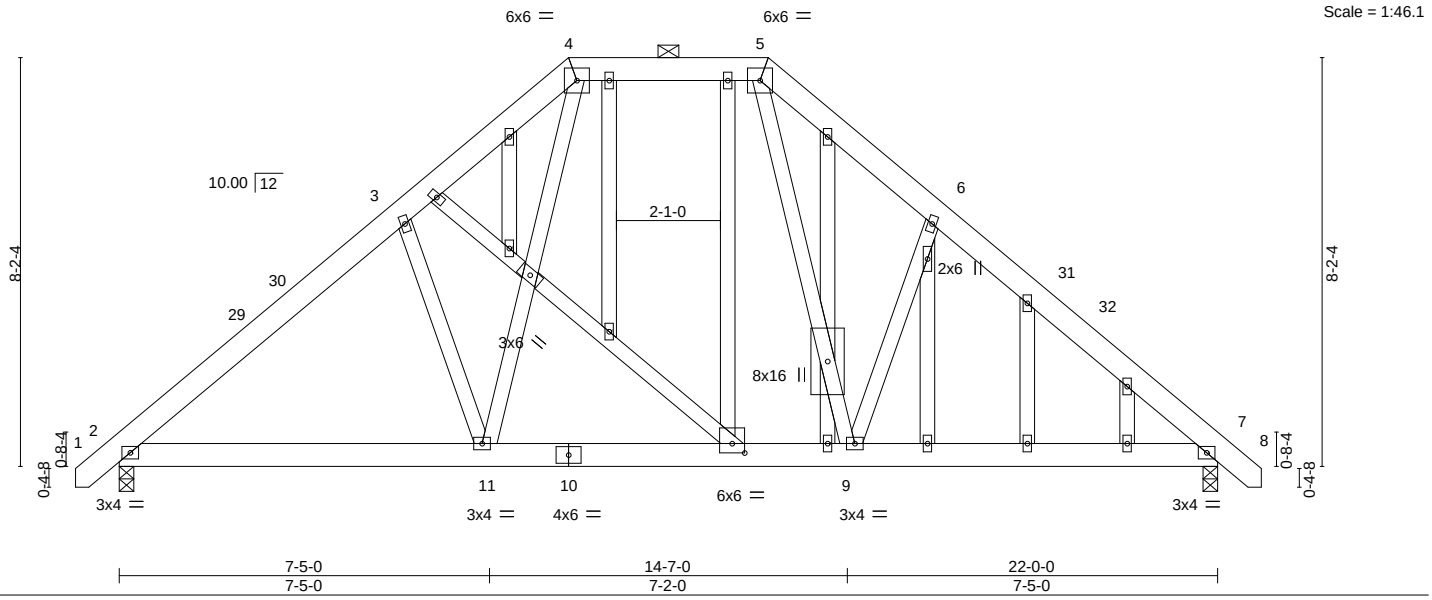


Plate Offsets (X,Y)-- [26:0-3-0,0-2-4]

| LOADING (psf) | | SPACING- 2-0-0 | | CSI. | | DEFL. | in | (loc) | l/defl | L/d | PLATES | GRIP |
|---|---|---|---|---|---|---|---|---|---|---|---|---|
| TCLL | 20.0 | Plate Grip DOL | 1.15 | TC | 0.13 | Vert(LL) | -0.04 | 7-9 | >999 | 360 | MT20 | 244/190 |
| TCDL | 10.0 | Lumber DOL | 1.15 | BC | 0.18 | Vert(CT) | -0.06 | 7-9 | >999 | 240 | | |
| BCLL | 0.0 * | Rep Stress Incr | YES | WB | 0.21 | Horz(CT) | 0.01 | 7 | n/a | n/a | | |
| BCDL | 10.0 | Code IRC2015/TPI2014 | | Matrix-S | | Wind(LL) | 0.05 | 2-11 | >999 | 240 | Weight: 213 lb | FT = 20% |

**LUMBER-**
TOP CHORD 2x6 SP No.1
BOT CHORD 2x6 SP No.1
WEBS 2x4 SP No.2
OTHERS 2x4 SP No.2

**BRACING-**
TOP CHORD Structural wood sheathing directly applied or 6-0-0 oc purlins, except 2-0-0 oc purlins (6-0-0 max.): 4-5.
BOT CHORD Rigid ceiling directly applied or 10-0-0 oc bracing.

**REACTIONS.** (size) 2=0-3-8, 7=0-3-8
Max Horz 2=-245(LC 10)
Max Uplift 2=-169(LC 12), 7=-169(LC 13)
Max Grav 2=922(LC 1), 7=922(LC 1)

**FORCES.** (lb) - Max. Comp./Max. Ten. - All forces 250 (lb) or less except when shown.
TOP CHORD 2-3=-1099/278, 3-4=-987/388, 4-5=-662/298, 5-6=-987/388, 6-7=-1099/278
BOT CHORD 2-11=-151/762, 9-11=-54/593, 7-9=-83/749
WEBS 4-11=-200/497, 5-9=-200/497, 3-11=-337/322, 6-9=-337/323

**NOTES-**
1) Unbalanced roof live loads have been considered for this design.
2) Wind: ASCE 7-10; Vult=130mph Vasd=103mph; TCDL=6.0psf; BCDL=6.0psf; h=15ft; Cat. II; Exp C; Enclosed; MWFRS (envelope) gable end zone and C-C Exterior(2) -0-8-14 to 3-7-14, Interior(1) 3-7-14 to 9-1-0, Exterior(2) 9-1-0 to 19-1-11, Interior(1) 19-1-11 to 22-8-14 zone;C-C for members and forces & MWFRS for reactions shown; Lumber DOL=1.60 plate grip DOL=1.60
3) Truss designed for wind loads in the plane of the truss only. For studs exposed to wind (normal to the face), see Standard Industry Gable End Details as applicable, or consult qualified building designer as per ANSI/TPI 1.
4) Provide adequate drainage to prevent water ponding.
5) All plates are 2x4 MT20 unless otherwise indicated.
6) Gable studs spaced at 2-0-0 oc.
7) This truss has been designed for a 10.0 psf bottom chord live load nonconcurrent with any other live loads.
8) * This truss has been designed for a live load of 30.0psf on the bottom chord in all areas where a rectangle 3-6-0 tall by 2-0-0 wide will fit between the bottom chord and any other members.
9) Provide mechanical connection (by others) of truss to bearing plate capable of withstanding 100 lb uplift at joint(s) except (jt=lb) 2=169, 7=169.
10) Graphical purlin representation does not depict the size or the orientation of the purlin along the top and/or bottom chord.


January 27,2022



ENGINEERING BY TRENCO A MiTek Affiliate
818 Soundside Road
Edenton, NC 27932

| Job | Truss | Truss Type | Qty | Ply | Cates\Lot 678 Lexington Plantation |
|---|---|---|---|---|---|
| J0222-0628 | CJ01 | DIAGONAL HIP GIRDER | 1 | 1 | I49924649<br>Job Reference (optional) |

Comtech, Inc, Fayetteville, NC - 28314, 8.430 s Aug 16 2021 MiTek Industries, Inc. Thu Jan 27 08:53:27 2022 Page 1
ID:mP4IR_1wA7sHHYpJqichtZz2PVG-f9T?WYkujY01YmGFAsHtEK84AUqUt96WVLION2zrCSM

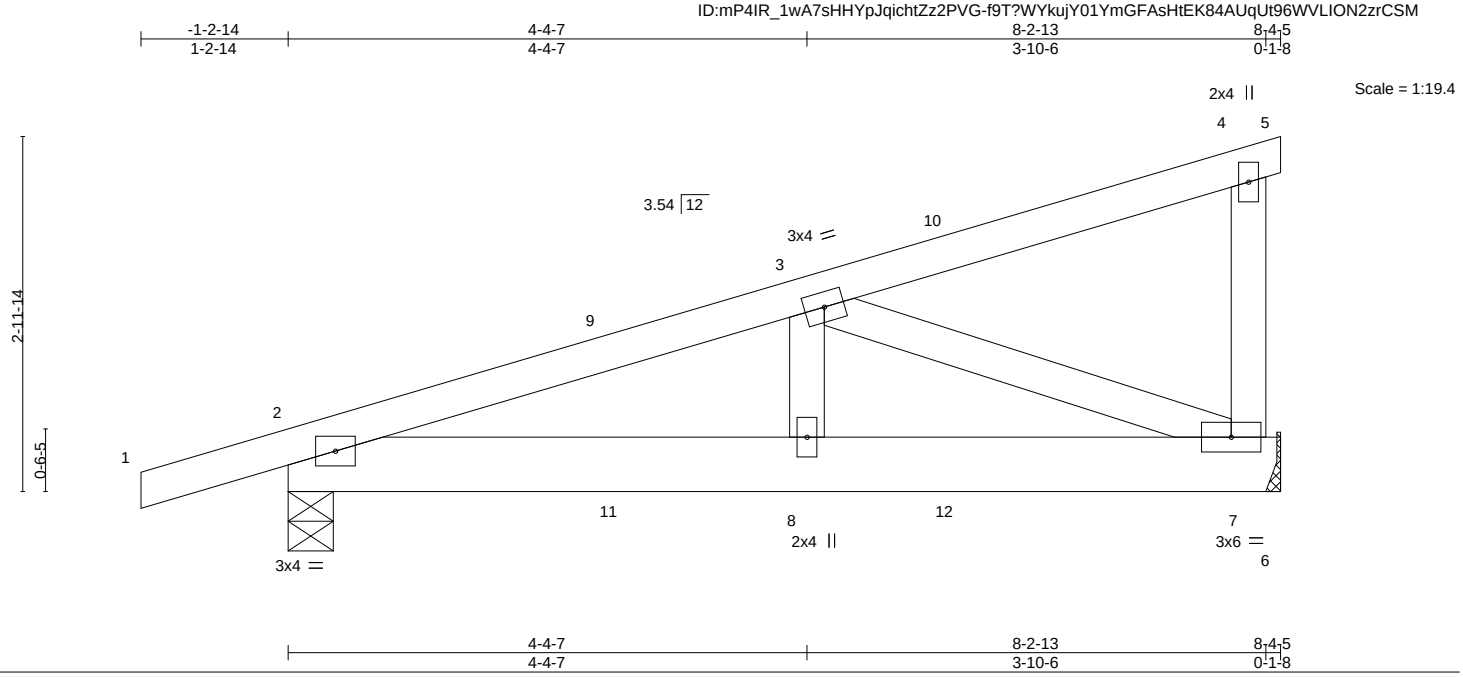


| LOADING (psf) | | SPACING- 2-0-0 | CSI. | | DEFL. in (loc) l/defl L/d | PLATES GRIP |
|---|---|---|---|---|---|---|
| TCLL | 20.0 | Plate Grip DOL 1.15 | TC | 0.18 | Vert(LL) 0.01 8 >999 240 | MT20 244/190 |
| TCDL | 10.0 | Lumber DOL 1.15 | BC | 0.11 | Vert(CT) -0.02 8 >999 240 | |
| BCLL | 0.0 * | Rep Stress Incr NO | WB | 0.15 | Horz(CT) 0.00 7 n/a n/a | |
| BCDL | 10.0 | Code IRC2015/TPI2014 | Matrix-P | | | Weight: 45 lb FT = 20% |

**LUMBER-**
TOP CHORD 2x4 SP No.1
BOT CHORD 2x6 SP No.1
WEBS 2x4 SP No.2

**BRACING-**
TOP CHORD Structural wood sheathing directly applied or 6-0-0 oc purlins.
BOT CHORD Rigid ceiling directly applied or 10-0-0 oc bracing.

**REACTIONS.** (size) 2=0-4-9, 7=Mechanical
Max Horz 2=95(LC 19)
Max Uplift 2=-180(LC 4), 7=-166(LC 4)
Max Grav 2=426(LC 1), 7=356(LC 1)

**FORCES.** (lb) - Max. Comp./Max. Ten. - All forces 250 (lb) or less except when shown.
TOP CHORD 2-3=-589/207
BOT CHORD 2-8=-250/522, 7-8=-250/522
WEBS 3-7=-559/268

**NOTES-**
1) Wind: ASCE 7-10; Vult=130mph Vasd=103mph; TCDL=6.0psf; BCDL=6.0psf; h=15ft; Cat. II; Exp C; Enclosed; MWFRS (envelope); porch left and right exposed; Lumber DOL=1.60 plate grip DOL=1.60
2) This truss has been designed for a 10.0 psf bottom chord live load nonconcurrent with any other live loads.
3) * This truss has been designed for a live load of 30.0psf on the bottom chord in all areas where a rectangle 3-6-0 tall by 2-0-0 wide will fit between the bottom chord and any other members.
4) Refer to girder(s) for truss to truss connections.
5) Provide mechanical connection (by others) of truss to bearing plate capable of withstanding 100 lb uplift at joint(s) except (jt=lb) 2=180, 7=166.
6) Hanger(s) or other connection device(s) shall be provided sufficient to support concentrated load(s) 17 lb down and 22 lb up at 2-9-8, 17 lb down and 22 lb up at 2-9-8, and 42 lb down and 60 lb up at 5-7-7, and 42 lb down and 60 lb up at 5-7-7 on top chord, and 2 lb down and 21 lb up at 2-9-8, 2 lb down and 21 lb up at 2-9-8, and 20 lb down and 41 lb up at 5-7-7, and 20 lb down and 41 lb up at 5-7-7 on bottom chord. The design/selection of such connection device(s) is the responsibility of others.
7) In the LOAD CASE(S) section, loads applied to the face of the truss are noted as front (F) or back (B).

**LOAD CASE(S)** Standard
1) Dead + Roof Live (balanced): Lumber Increase=1.15, Plate Increase=1.15
Uniform Loads (plf)
Vert: 1-4=-60, 4-5=-20, 2-6=-20
Concentrated Loads (lb)
Vert: 10=-36(F=-18, B=-18) 12=-17(F=-9, B=-9)


January 27,2022



ENGINEERING BY TRENCO A MiTek Affiliate
818 Soundside Road
Edenton, NC 27932

| Job | Truss | Truss Type | Qty | Ply | Cates\Lot 678 Lexington Plantation |
|---|---|---|---|---|---|
| J0222-0628 | D1 | COMMON | 2 | 1 | I49924650<br>Job Reference (optional) |

Comtech, Inc, Fayetteville, NC - 28314, 8.430 s Aug 16 2021 MiTek Industries, Inc. Thu Jan 27 08:53:28 2022 Page 1
ID:mP4IR_1wA7sHHYpJqichtZz2PVG-7L0NkulWUs8uAwrSkao6nYgFNu9Tcdlfk?1xvUzrCSL

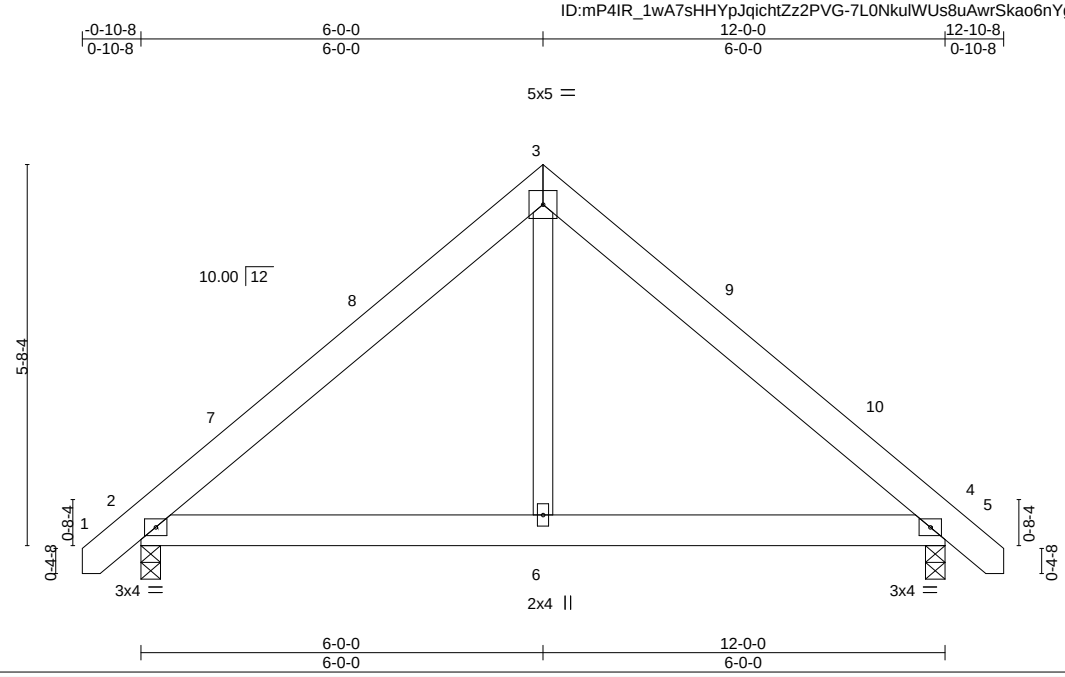


| LOADING (psf) | | SPACING- 2-0-0 | | CSI. | | DEFL. | in | (loc) | l/defl | L/d | PLATES | GRIP |
|---|---|---|---|---|---|---|---|---|---|---|---|---|
| TCLL | 20.0 | Plate Grip DOL | 1.15 | TC | 0.15 | Vert(LL) | -0.01 | 4-6 | >999 | 360 | MT20 | 244/190 |
| TCDL | 10.0 | Lumber DOL | 1.15 | BC | 0.13 | Vert(CT) | -0.02 | 4-6 | >999 | 240 | | |
| BCLL | 0.0 * | Rep Stress Incr | YES | WB | 0.06 | Horz(CT) | 0.00 | 4 | n/a | n/a | | |
| BCDL | 10.0 | Code IRC2015/TPI2014 | | Matrix-S | | Wind(LL) | 0.01 | 2-6 | >999 | 240 | Weight: 78 lb | FT = 20% |

**LUMBER-**
TOP CHORD 2x6 SP No.1
BOT CHORD 2x6 SP No.1
WEBS 2x4 SP No.2

**BRACING-**
TOP CHORD Structural wood sheathing directly applied or 6-0-0 oc purlins.
BOT CHORD Rigid ceiling directly applied or 10-0-0 oc bracing.

**REACTIONS.** (size) 2=0-3-8, 4=0-3-8
Max Horz 2=-135(LC 10)
Max Uplift 2=-32(LC 12), 4=-32(LC 13)
Max Grav 2=522(LC 1), 4=522(LC 1)

**FORCES.** (lb) - Max. Comp./Max. Ten. - All forces 250 (lb) or less except when shown.
TOP CHORD 2-3=-518/147, 3-4=-518/147
BOT CHORD 2-6=0/323, 4-6=0/323
WEBS 3-6=0/284

**NOTES-**
1) Unbalanced roof live loads have been considered for this design.
2) Wind: ASCE 7-10; Vult=130mph Vasd=103mph; TCDL=6.0psf; BCDL=6.0psf; h=15ft; Cat. II; Exp C; Enclosed; MWFRS (envelope) and C-C Exterior(2) -0-8-14 to 3-7-14, Interior(1) 3-7-14 to 6-0-0, Exterior(2) 6-0-0 to 10-4-13, Interior(1) 10-4-13 to 12-8-14 zone;C-C for members and forces & MWFRS for reactions shown; Lumber DOL=1.60 plate grip DOL=1.60
3) This truss has been designed for a 10.0 psf bottom chord live load nonconcurrent with any other live loads.
4) * This truss has been designed for a live load of 30.0psf on the bottom chord in all areas where a rectangle 3-6-0 tall by 2-0-0 wide will fit between the bottom chord and any other members.
5) Provide mechanical connection (by others) of truss to bearing plate capable of withstanding 100 lb uplift at joint(s) 2, 4.


January 27,2022



ENGINEERING BY TRENCO A MiTek Affiliate
818 Soundside Road
Edenton, NC 27932

| Job | Truss | Truss Type | Qty | Ply | Cates\Lot 678 Lexington Plantation |
|---|---|---|---|---|---|
| J0222-0628 | D1GE | GABLE | 1 | 1 | I49924651<br>Job Reference (optional) |

Comtech, Inc, Fayetteville, NC - 28314, 8.430 s Aug 16 2021 MiTek Industries, Inc. Thu Jan 27 08:53:29 2022 Page 1
ID:mP4IR_1wA7sHHYpJqichtZz2PVG-bXalxEl8F9Gln4QeHHKLJlDR6IWTL5bpyfnVRxzrCSK

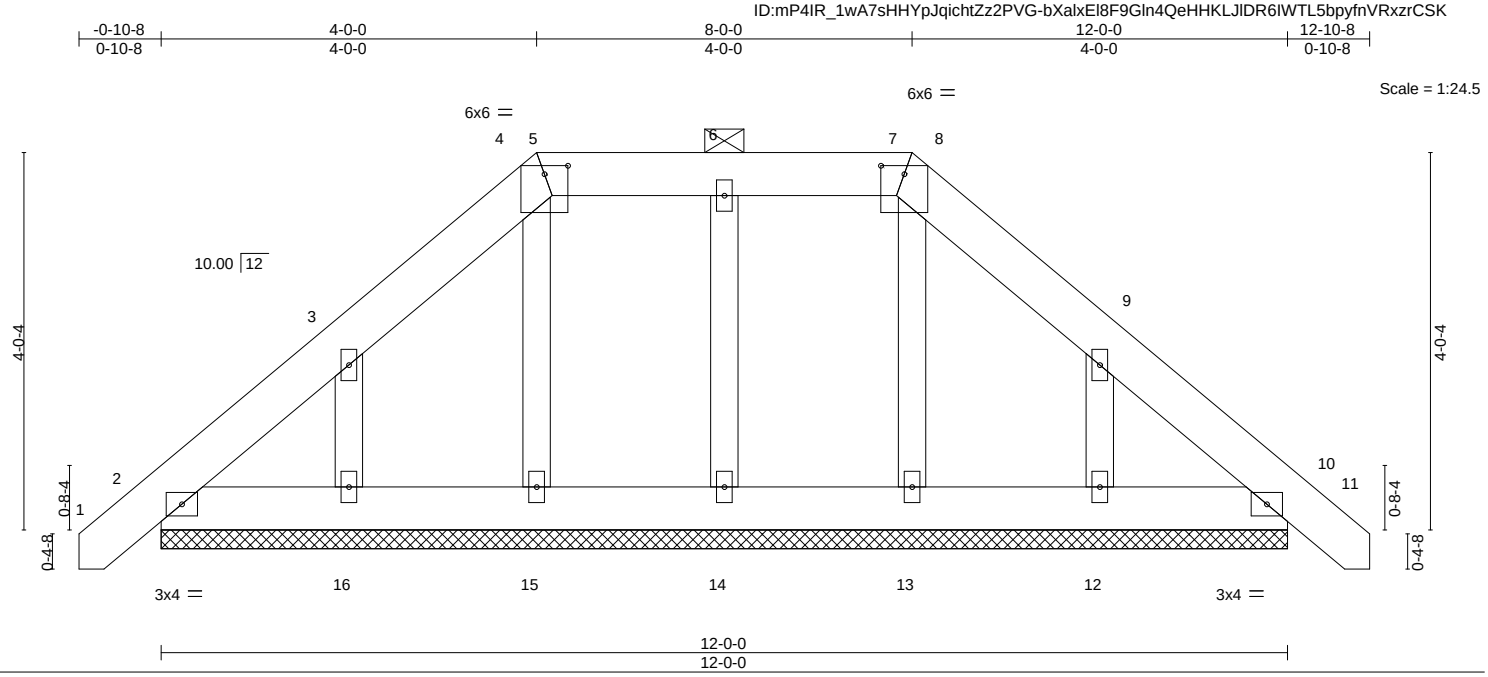


Plate Offsets (X,Y)-- [5:0-3-0,0-1-1], [7:0-3-0,0-1-1]

| LOADING (psf) | | SPACING- 2-0-0 | | CSI. | | DEFL. | in | (loc) | l/defl | L/d | PLATES | GRIP |
|---|---|---|---|---|---|---|---|---|---|---|---|---|
| TCLL | 20.0 | Plate Grip DOL | 1.15 | TC | 0.02 | Vert(LL) | 0.00 | 10 | n/r | 120 | MT20 | 244/190 |
| TCDL | 10.0 | Lumber DOL | 1.15 | BC | 0.01 | Vert(CT) | 0.00 | 10 | n/r | 120 | | |
| BCLL | 0.0 * | Rep Stress Incr | YES | WB | 0.03 | Horz(CT) | 0.00 | 10 | n/a | n/a | | |
| BCDL | 10.0 | Code IRC2015/TPI2014 | | Matrix-S | | | | | | | Weight: 86 lb | FT = 20% |

**LUMBER-**
TOP CHORD 2x6 SP No.1
BOT CHORD 2x6 SP No.1
OTHERS 2x4 SP No.2

**BRACING-**
TOP CHORD Structural wood sheathing directly applied or 6-0-0 oc purlins, except 2-0-0 oc purlins (6-0-0 max.): 5-7.
BOT CHORD Rigid ceiling directly applied or 10-0-0 oc bracing.

**REACTIONS.** All bearings 12-0-0.
(lb) - Max Horz 2=-120(LC 10)
Max Uplift All uplift 100 lb or less at joint(s) 2, 10, 14, 15, 13 except 16=-128(LC 12), 12=-126(LC 13)
Max Grav All reactions 250 lb or less at joint(s) 2, 10, 14, 15, 16, 13, 12

**FORCES.** (lb) - Max. Comp./Max. Ten. - All forces 250 (lb) or less except when shown.

**NOTES-**
1) Unbalanced roof live loads have been considered for this design.
2) Wind: ASCE 7-10; Vult=130mph Vasd=103mph; TCDL=6.0psf; BCDL=6.0psf; h=15ft; Cat. II; Exp C; Enclosed; MWFRS (envelope) gable end zone and C-C Corner(3) -0-8-14 to 3-7-14, Exterior(2) 3-7-14 to 4-1-0, Corner(3) 4-1-0 to 12-3-13, Exterior(2) 12-3-13 to 12-8-14 zone;C-C for members and forces & MWFRS for reactions shown; Lumber DOL=1.60 plate grip DOL=1.60
3) Truss designed for wind loads in the plane of the truss only. For studs exposed to wind (normal to the face), see Standard Industry Gable End Details as applicable, or consult qualified building designer as per ANSI/TPI 1.
4) Provide adequate drainage to prevent water ponding.
5) All plates are 2x4 MT20 unless otherwise indicated.
6) Gable requires continuous bottom chord bearing.
7) Gable studs spaced at 2-0-0 oc.
8) This truss has been designed for a 10.0 psf bottom chord live load nonconcurrent with any other live loads.
9) * This truss has been designed for a live load of 30.0psf on the bottom chord in all areas where a rectangle 3-6-0 tall by 2-0-0 wide will fit between the bottom chord and any other members.
10) Provide mechanical connection (by others) of truss to bearing plate capable of withstanding 100 lb uplift at joint(s) 2, 10, 14, 15, 13 except (jt=lb) 16=128, 12=126.
11) Graphical purlin representation does not depict the size or the orientation of the purlin along the top and/or bottom chord.

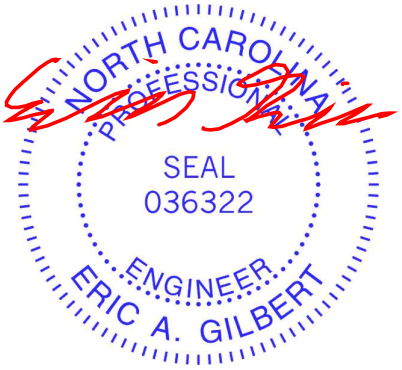


January 27,2022



ENGINEERING BY TRENCO A MiTek Affiliate
818 Soundside Road
Edenton, NC 27932

| Job | Truss | Truss Type | Qty | Ply | Cates\Lot 678 Lexington Plantation |
|---|---|---|---|---|---|
| J0222-0628 | J02 | JACK-OPEN | 2 | 1 | I49924652<br>Job Reference (optional) |

Comtech, Inc, Fayetteville, NC - 28314, 8.430 s Aug 16 2021 MiTek Industries, Inc. Thu Jan 27 08:53:30 2022 Page 1
ID:mP4IR_1wA7sHHYpJqichtZz2PVG-3k879Zmm0TOcPD?qr?raszmcZisi4YFyBJW2_NzrCSJ

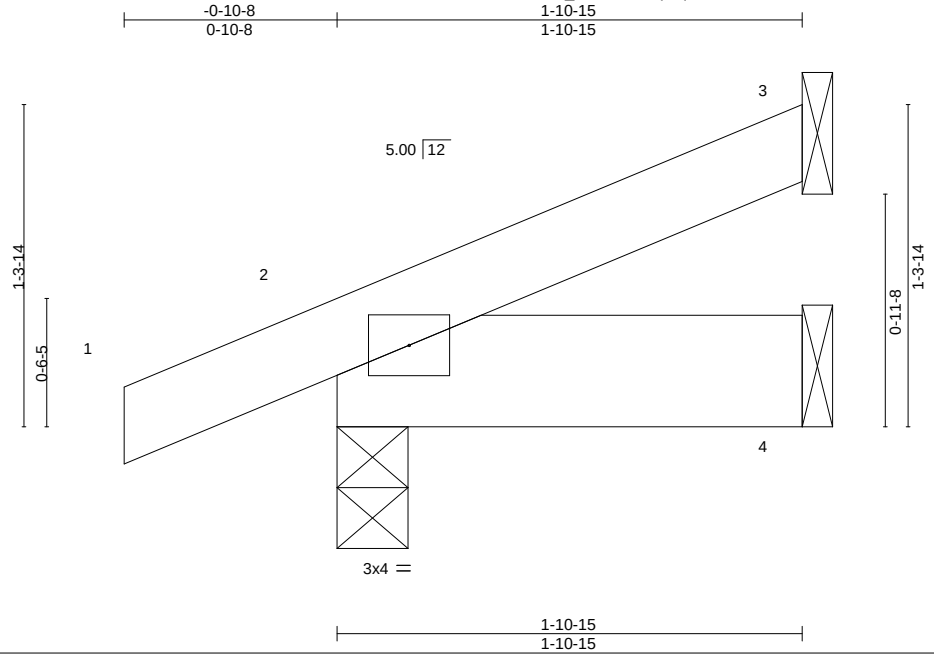


| LOADING (psf) | | SPACING- 2-0-0 | | CSI. | | DEFL. | in | (loc) | l/defl | L/d | PLATES | GRIP |
|---|---|---|---|---|---|---|---|---|---|---|---|---|
| TCLL | 20.0 | Plate Grip DOL | 1.15 | TC | 0.04 | Vert(LL) | -0.00 | 2 | >999 | 360 | MT20 | 244/190 |
| TCDL | 10.0 | Lumber DOL | 1.15 | BC | 0.01 | Vert(CT) | -0.00 | 2 | >999 | 240 | | |
| BCLL | 0.0 * | Rep Stress Incr | YES | WB | 0.00 | Horz(CT) | -0.00 | 3 | n/a | n/a | | |
| BCDL | 10.0 | Code IRC2015/TPI2014 | | Matrix-P | | Wind(LL) | 0.00 | 2 | >999 | 240 | Weight: 9 lb | FT = 20% |

**LUMBER-**
TOP CHORD 2x4 SP No.1
BOT CHORD 2x6 SP No.1

**BRACING-**
TOP CHORD Structural wood sheathing directly applied or 1-10-15 oc purlins.
BOT CHORD Rigid ceiling directly applied or 10-0-0 oc bracing.

**REACTIONS.** (size) 3=Mechanical, 2=0-3-8, 4=Mechanical
Max Horz 2=36(LC 12)
Max Uplift 3=-23(LC 12), 2=-46(LC 8), 4=-10(LC 8)
Max Grav 3=43(LC 1), 2=142(LC 1), 4=37(LC 3)

**FORCES.** (lb) - Max. Comp./Max. Ten. - All forces 250 (lb) or less except when shown.

**NOTES-**
1) Wind: ASCE 7-10; Vult=130mph Vasd=103mph; TCDL=6.0psf; BCDL=6.0psf; h=15ft; Cat. II; Exp C; Enclosed; MWFRS (envelope) and C-C Exterior(2) zone; porch left and right exposed;C-C for members and forces & MWFRS for reactions shown; Lumber DOL=1.60 plate grip DOL=1.60
2) This truss has been designed for a 10.0 psf bottom chord live load nonconcurrent with any other live loads.
3) * This truss has been designed for a live load of 30.0psf on the bottom chord in all areas where a rectangle 3-6-0 tall by 2-0-0 wide will fit between the bottom chord and any other members.
4) Refer to girder(s) for truss to truss connections.
5) Provide mechanical connection (by others) of truss to bearing plate capable of withstanding 100 lb uplift at joint(s) 3, 2, 4.


January 27,2022



ENGINEERING BY TRENCO A MiTek Affiliate
818 Soundside Road
Edenton, NC 27932

| Job | Truss | Truss Type | Qty | Ply | Cates\Lot 678 Lexington Plantation |
|---|---|---|---|---|---|
| J0222-0628 | J03 | JACK-OPEN | 2 | 1 | I49924653<br>Job Reference (optional) |

Comtech, Inc, Fayetteville, NC - 28314, 8.430 s Aug 16 2021 MiTek Industries, Inc. Thu Jan 27 08:53:31 2022 Page 1
ID:mP4IR_1wA7sHHYpJqichtZz2PVG-XwiWMvnPnnWT1Na1PiMpOAlIP6CKp?V6QzGcWpzrCSI

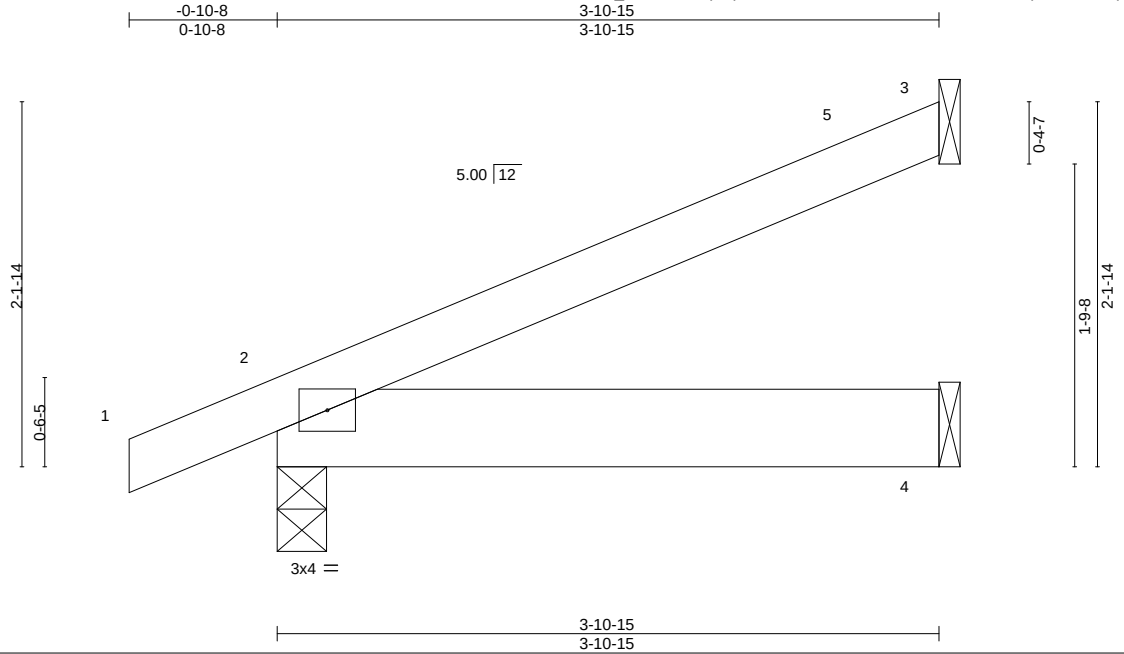


| LOADING (psf) | | SPACING- 2-0-0 | | CSI. | | DEFL. | in | (loc) | l/defl | L/d | PLATES | GRIP |
|---|---|---|---|---|---|---|---|---|---|---|---|---|
| TCLL | 20.0 | Plate Grip DOL | 1.15 | TC | 0.16 | Vert(LL) | -0.00 | 2-4 | >999 | 360 | MT20 | 244/190 |
| TCDL | 10.0 | Lumber DOL | 1.15 | BC | 0.05 | Vert(CT) | -0.01 | 2-4 | >999 | 240 | | |
| BCLL | 0.0 * | Rep Stress Incr | YES | WB | 0.00 | Horz(CT) | -0.00 | 3 | n/a | n/a | | |
| BCDL | 10.0 | Code IRC2015/TPI2014 | | Matrix-P | | Wind(LL) | 0.01 | 2-4 | >999 | 240 | Weight: 17 lb | FT = 20% |

**LUMBER-**
TOP CHORD 2x4 SP No.1
BOT CHORD 2x6 SP No.1

**BRACING-**
TOP CHORD Structural wood sheathing directly applied or 3-10-15 oc purlins.
BOT CHORD Rigid ceiling directly applied or 10-0-0 oc bracing.

**REACTIONS.** (size) 3=Mechanical, 2=0-3-8, 4=Mechanical
Max Horz 2=63(LC 12)
Max Uplift 3=-49(LC 12), 2=-63(LC 8), 4=-19(LC 8)
Max Grav 3=103(LC 1), 2=218(LC 1), 4=74(LC 3)

**FORCES.** (lb) - Max. Comp./Max. Ten. - All forces 250 (lb) or less except when shown.

**NOTES-**
1) Wind: ASCE 7-10; Vult=130mph Vasd=103mph; TCDL=6.0psf; BCDL=6.0psf; h=15ft; Cat. II; Exp C; Enclosed; MWFRS (envelope) and C-C Exterior(2) -0-10-8 to 3-6-5, Interior(1) 3-6-5 to 3-10-3 zone; porch left and right exposed;C-C for members and forces & MWFRS for reactions shown; Lumber DOL=1.60 plate grip DOL=1.60
2) This truss has been designed for a 10.0 psf bottom chord live load nonconcurrent with any other live loads.
3) * This truss has been designed for a live load of 30.0psf on the bottom chord in all areas where a rectangle 3-6-0 tall by 2-0-0 wide will fit between the bottom chord and any other members.
4) Refer to girder(s) for truss to truss connections.
5) Provide mechanical connection (by others) of truss to bearing plate capable of withstanding 100 lb uplift at joint(s) 3, 2, 4.


January 27,2022



ENGINEERING BY TRENCO A MiTek Affiliate
818 Soundside Road
Edenton, NC 27932

| Job | Truss | Truss Type | Qty | Ply | Cates\Lot 678 Lexington Plantation |
|---|---|---|---|---|---|
| J0222-0628 | J06 | JACK-OPEN | 1 | 1 | I49924654<br>Job Reference (optional) |

Comtech, Inc, Fayetteville, NC - 28314, 8.430 s Aug 16 2021 MiTek Industries, Inc. Thu Jan 27 08:53:31 2022 Page 1
ID:mP4IR_1wA7sHHYpJqichtZz2PVG-XwiWMvnPnnWT1Na1PiMpOAlhE6BDp?w6QzGcWpzrCSI

-0-10-8 / 0-10-8 | 5-10-8 / 5-10-8 | 6-0-0 / 0-1-8

Scale = 1:18.5

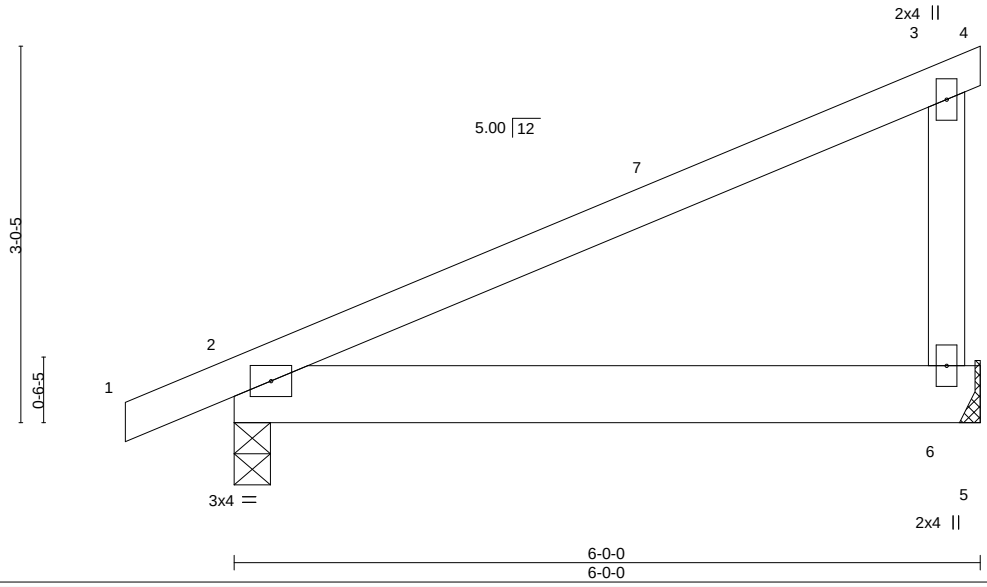


| LOADING (psf) | | SPACING- 2-0-0 | | CSI. | | DEFL. in (loc) l/defl L/d | | PLATES GRIP |
|---|---|---|---|---|---|---|---|---|
| TCLL | 20.0 | Plate Grip DOL | 1.15 | TC | 0.43 | Vert(LL) -0.01 2-6 >999 360 | | MT20 244/190 |
| TCDL | 10.0 | Lumber DOL | 1.15 | BC | 0.12 | Vert(CT) -0.03 2-6 >999 240 | | |
| BCLL | 0.0 * | Rep Stress Incr | YES | WB | 0.04 | Horz(CT) 0.00 n/a n/a | | |
| BCDL | 10.0 | Code IRC2015/TPI2014 | | Matrix-P | | Wind(LL) 0.03 2-6 >999 240 | | Weight: 29 lb FT = 20% |

**LUMBER-**
TOP CHORD 2x4 SP No.1
BOT CHORD 2x6 SP No.1
WEBS 2x4 SP No.2

**BRACING-**
TOP CHORD Structural wood sheathing directly applied or 6-0-0 oc purlins.
BOT CHORD Rigid ceiling directly applied or 10-0-0 oc bracing.

**REACTIONS.** (size) 2=0-3-8, 6=Mechanical
Max Horz 2=91(LC 12)
Max Uplift 2=-78(LC 8), 6=-75(LC 9)
Max Grav 2=290(LC 1), 6=229(LC 1)

**FORCES.** (lb) - Max. Comp./Max. Ten. - All forces 250 (lb) or less except when shown.

**NOTES-**
1) Wind: ASCE 7-10; Vult=130mph Vasd=103mph; TCDL=6.0psf; BCDL=6.0psf; h=15ft; Cat. II; Exp C; Enclosed; MWFRS (envelope) and C-C Exterior(2) -0-10-8 to 3-6-5, Interior(1) 3-6-5 to 6-0-0 zone; porch left and right exposed;C-C for members and forces & MWFRS for reactions shown; Lumber DOL=1.60 plate grip DOL=1.60
2) This truss has been designed for a 10.0 psf bottom chord live load nonconcurrent with any other live loads.
3) * This truss has been designed for a live load of 30.0psf on the bottom chord in all areas where a rectangle 3-6-0 tall by 2-0-0 wide will fit between the bottom chord and any other members.
4) Refer to girder(s) for truss to truss connections.
5) Provide mechanical connection (by others) of truss to bearing plate capable of withstanding 100 lb uplift at joint(s) 2, 6.


January 27,2022



ENGINEERING BY TRENCO A MiTek Affiliate
818 Soundside Road
Edenton, NC 27932

| Job | Truss | Truss Type | Qty | Ply | Cates\Lot 678 Lexington Plantation |
|---|---|---|---|---|---|
| J0222-0628 | M1 | MONOPITCH GIRDER | 1 | 1 | I49924655<br>Job Reference (optional) |

Comtech, Inc, Fayetteville, NC - 28314, 8.430 s Aug 16 2021 MiTek Industries, Inc. Thu Jan 27 08:53:32 2022 Page 1
ID:mP4IR_1wA7sHHYpJqichtZz2PVG-?6GuaFo1Y4eKeX9DzPt2xOrxvVOGYQ0Fed?92GzrCSH

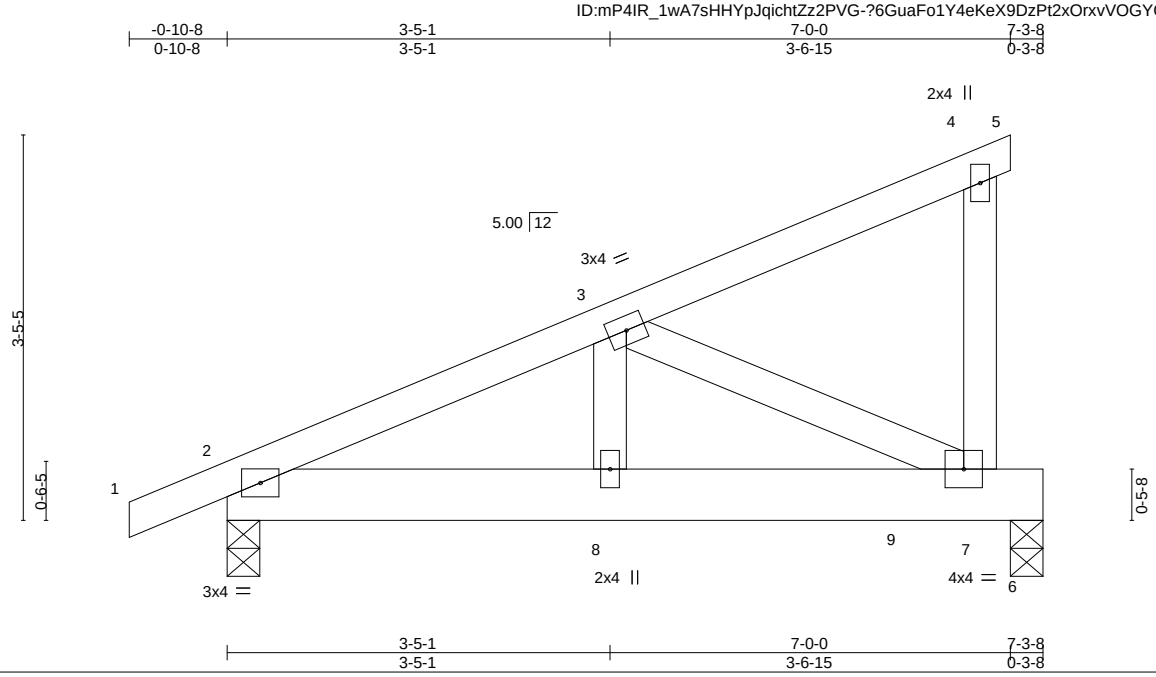


| LOADING (psf) | | SPACING- 2-0-0 | | CSI. | | DEFL. | in | (loc) | l/defl | L/d | PLATES | GRIP |
|---|---|---|---|---|---|---|---|---|---|---|---|---|
| TCLL | 20.0 | Plate Grip DOL | 1.15 | TC | 0.11 | Vert(LL) | -0.02 | 7-8 | >999 | 360 | MT20 | 244/190 |
| TCDL | 10.0 | Lumber DOL | 1.15 | BC | 0.65 | Vert(CT) | -0.05 | 7-8 | >999 | 240 | | |
| BCLL | 0.0 * | Rep Stress Incr | NO | WB | 0.17 | Horz(CT) | 0.00 | 6 | n/a | n/a | | |
| BCDL | 10.0 | Code IRC2015/TPI2014 | | Matrix-P | | Wind(LL) | 0.03 | 7-8 | >999 | 240 | Weight: 40 lb | FT = 20% |

**LUMBER-**
TOP CHORD 2x4 SP No.1
BOT CHORD 2x6 SP No.1
WEBS 2x4 SP No.2

**BRACING-**
TOP CHORD Structural wood sheathing directly applied or 6-0-0 oc purlins, except end verticals.
BOT CHORD Rigid ceiling directly applied or 10-0-0 oc bracing.

**REACTIONS.** (size) 2=0-3-8, 6=0-3-8
Max Horz 2=105(LC 23)
Max Uplift 2=-138(LC 4), 6=-342(LC 5)
Max Grav 2=458(LC 1), 6=873(LC 1)

**FORCES.** (lb) - Max. Comp./Max. Ten. - All forces 250 (lb) or less except when shown.
TOP CHORD 2-3=-784/233
BOT CHORD 2-8=-258/672, 7-8=-258/672
WEBS 3-7=-743/286, 3-8=-178/417

**NOTES-**
1) Wind: ASCE 7-10; Vult=130mph Vasd=103mph; TCDL=6.0psf; BCDL=6.0psf; h=15ft; Cat. II; Exp C; Enclosed; MWFRS (envelope); porch left and right exposed; Lumber DOL=1.60 plate grip DOL=1.60
2) This truss has been designed for a 10.0 psf bottom chord live load nonconcurrent with any other live loads.
3) * This truss has been designed for a live load of 30.0psf on the bottom chord in all areas where a rectangle 3-6-0 tall by 2-0-0 wide will fit between the bottom chord and any other members.
4) Provide mechanical connection (by others) of truss to bearing plate capable of withstanding 100 lb uplift at joint(s) except (jt=lb) 2=138, 6=342.
5) Hanger(s) or other connection device(s) shall be provided sufficient to support concentrated load(s) 730 lb down and 328 lb up at 6-0-12 on bottom chord. The design/selection of such connection device(s) is the responsibility of others.
6) In the LOAD CASE(S) section, loads applied to the face of the truss are noted as front (F) or back (B).

**LOAD CASE(S)** Standard
1) Dead + Roof Live (balanced): Lumber Increase=1.15, Plate Increase=1.15
Uniform Loads (plf)
Vert: 1-4=-60, 4-5=-20, 2-6=-20
Concentrated Loads (lb)
Vert: 9=-730(F)

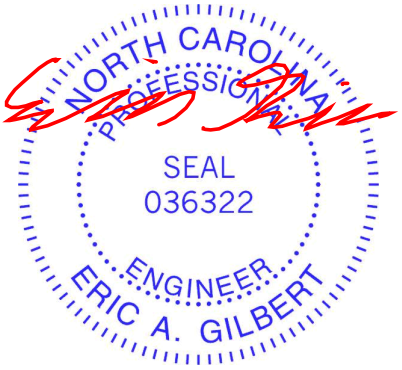


January 27,2022



ENGINEERING BY TRENCO A MiTek Affiliate
818 Soundside Road
Edenton, NC 27932

| Job | Truss | Truss Type | Qty | Ply | Cates\Lot 678 Lexington Plantation |
|---|---|---|---|---|---|
| J0222-0628 | M2 | MONOPITCH | 6 | 1 | I49924656<br>Job Reference (optional) |

Comtech, Inc, Fayetteville, NC - 28314, 8.430 s Aug 16 2021 MiTek Industries, Inc. Thu Jan 27 08:53:33 2022 Page 1
ID:mP4IR_1wA7sHHYpJqichtZz2PVG-UIqGnbofJOmBGhkPW7OHTbO6ovsjHv0OtHliaizrCSG

-0-10-8 | 3-6-13 | 7-0-0
0-10-8 | 3-6-13 | 3-5-3

Scale = 1:20.2

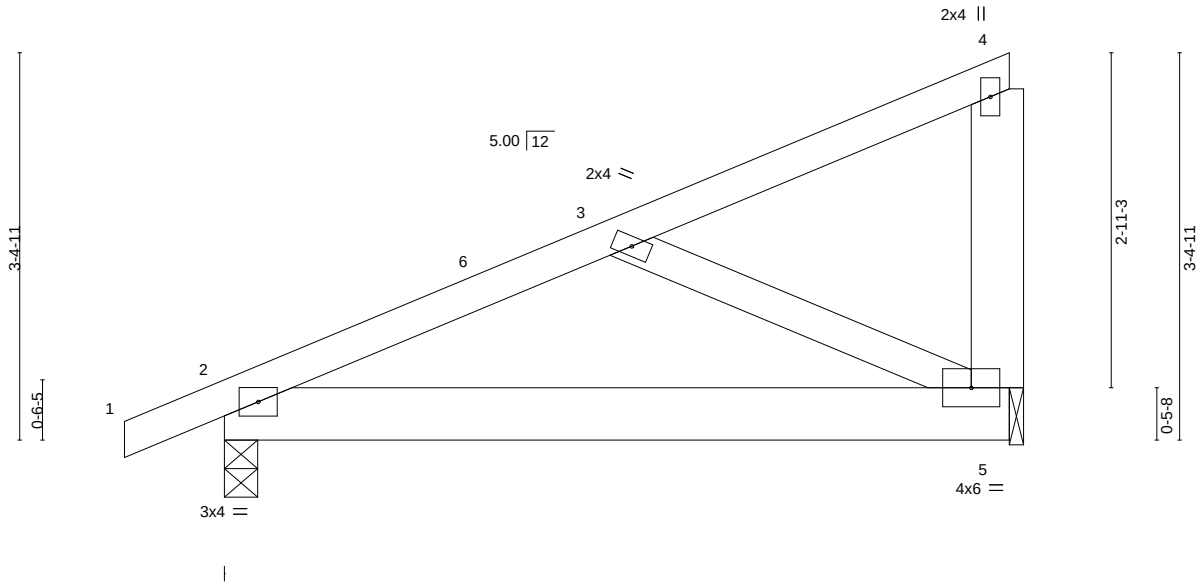


| LOADING (psf) | | | SPACING- | 2-0-0 | CSI. | | DEFL. | in | (loc) | l/defl | L/d | PLATES | GRIP |
|---|---|---|---|---|---|---|---|---|---|---|---|---|---|
| TCLL | 20.0 | | Plate Grip DOL | 1.15 | TC | 0.10 | Vert(LL) | -0.03 | 2-5 | >999 | 360 | MT20 | 244/190 |
| TCDL | 10.0 | | Lumber DOL | 1.15 | BC | 0.18 | Vert(CT) | -0.05 | 2-5 | >999 | 240 | | |
| BCLL | 0.0 | * | Rep Stress Incr | YES | WB | 0.06 | Horz(CT) | 0.00 | 5 | n/a | n/a | | |
| BCDL | 10.0 | | Code IRC2015/TPI2014 | | Matrix-P | | Wind(LL) | 0.06 | 2-5 | >999 | 240 | Weight: 40 lb | FT = 20% |

**LUMBER-**
TOP CHORD 2x4 SP No.1
BOT CHORD 2x6 SP No.1
WEBS 2x6 SP No.1 *Except*
3-5: 2x4 SP No.2

**BRACING-**
TOP CHORD Structural wood sheathing directly applied or 6-0-0 oc purlins, except end verticals.
BOT CHORD Rigid ceiling directly applied or 10-0-0 oc bracing.

**REACTIONS.** (size) 2=0-3-8, 5=0-1-8
Max Horz 2=102(LC 12)
Max Uplift 2=-88(LC 8), 5=-90(LC 9)
Max Grav 2=331(LC 1), 5=260(LC 1)

**FORCES.** (lb) - Max. Comp./Max. Ten. - All forces 250 (lb) or less except when shown.
TOP CHORD 2-3=-310/139
BOT CHORD 2-5=-260/247
WEBS 3-5=-271/286

**NOTES-**
1) Wind: ASCE 7-10; Vult=130mph Vasd=103mph; TCDL=6.0psf; BCDL=6.0psf; h=15ft; Cat. II; Exp C; Enclosed; MWFRS (envelope) and C-C Exterior(2) -0-10-8 to 3-4-8, Interior(1) 3-4-8 to 6-9-4 zone; porch left and right exposed;C-C for members and forces & MWFRS for reactions shown; Lumber DOL=1.60 plate grip DOL=1.60
2) This truss has been designed for a 10.0 psf bottom chord live load nonconcurrent with any other live loads.
3) * This truss has been designed for a live load of 30.0psf on the bottom chord in all areas where a rectangle 3-6-0 tall by 2-0-0 wide will fit between the bottom chord and any other members.
4) Bearing at joint(s) 5 considers parallel to grain value using ANSI/TPI 1 angle to grain formula. Building designer should verify capacity of bearing surface.
5) Provide mechanical connection (by others) of truss to bearing plate at joint(s) 5.
6) Provide mechanical connection (by others) of truss to bearing plate capable of withstanding 100 lb uplift at joint(s) 2, 5.

NORTH CAROLINA PROFESSIONAL SEAL 036322 ENGINEER ERIC A. GILBERT

January 27,2022




ENGINEERING BY TRENCO A MiTek Affiliate
818 Soundside Road
Edenton, NC 27932

| Job | Truss | Truss Type | Qty | Ply | Cates\Lot 678 Lexington Plantation |
|---|---|---|---|---|---|
| J0222-0628 | M2GE | GABLE | 1 | 1 | I49924657<br>Job Reference (optional) |

Comtech, Inc, Fayetteville, NC - 28314, 8.430 s Aug 16 2021 MiTek Industries, Inc. Thu Jan 27 08:53:33 2022 Page 1
ID:mP4IR_1wA7sHHYpJqichtZz2PVG-UIqGnbofJOmBGhkPW7OHTbO6AvuFHvCOtHliaizrCSG

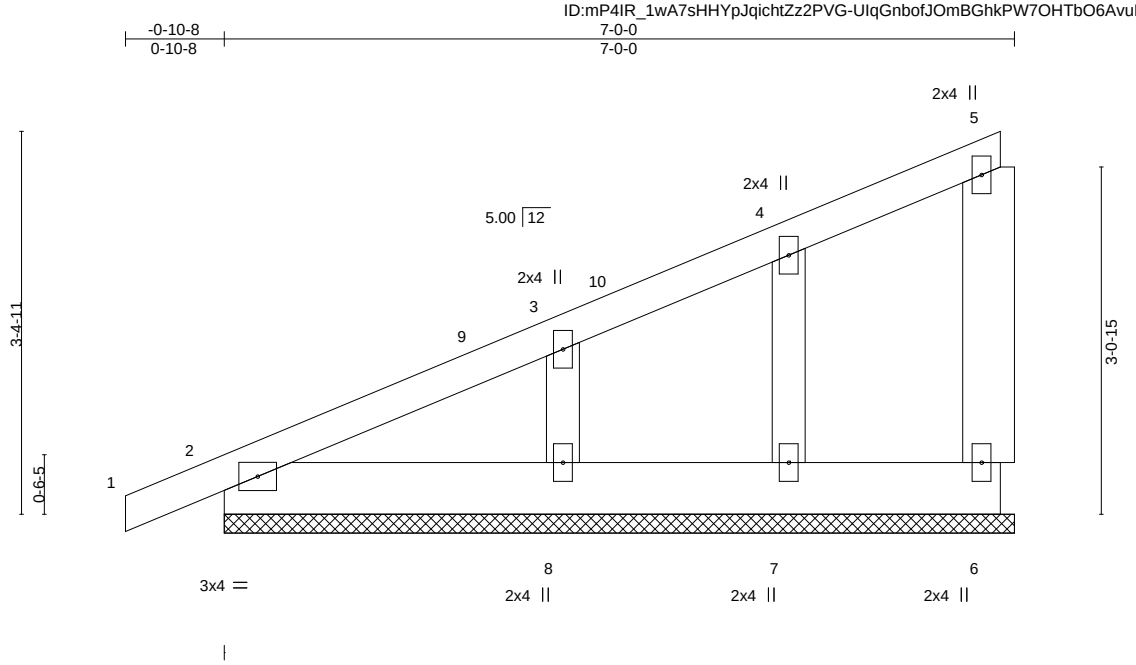


| LOADING (psf) | | SPACING- | 2-0-0 | CSI. | | DEFL. | in | (loc) | l/defl | L/d | PLATES | GRIP |
|---|---|---|---|---|---|---|---|---|---|---|---|---|
| TCLL | 20.0 | Plate Grip DOL | 1.15 | TC | 0.08 | Vert(LL) | -0.00 | 1 | n/r | 120 | MT20 | 244/190 |
| TCDL | 10.0 | Lumber DOL | 1.15 | BC | 0.02 | Vert(CT) | 0.00 | 1 | n/r | 120 | | |
| BCLL | 0.0 * | Rep Stress Incr | YES | WB | 0.05 | Horz(CT) | 0.00 | | n/a | n/a | | |
| BCDL | 10.0 | Code IRC2015/TPI2014 | | Matrix-P | | | | | | | Weight: 39 lb | FT = 20% |

**LUMBER-**

| | |
|---|---|
| TOP CHORD | 2x4 SP No.1 |
| BOT CHORD | 2x6 SP No.1 |
| WEBS | 2x6 SP No.1 |
| OTHERS | 2x4 SP No.2 |

**BRACING-**

| | |
|---|---|
| TOP CHORD | Structural wood sheathing directly applied or 6-0-0 oc purlins, except end verticals. |
| BOT CHORD | Rigid ceiling directly applied or 10-0-0 oc bracing. |

**REACTIONS.** All bearings 7-0-0.
(lb) - Max Horz 2=148(LC 12)
Max Uplift All uplift 100 lb or less at joint(s) 6, 2, 7, 8
Max Grav All reactions 250 lb or less at joint(s) 6, 2, 7, 8

**FORCES.** (lb) - Max. Comp./Max. Ten. - All forces 250 (lb) or less except when shown.
WEBS 3-8=-170/288

**NOTES-**
1) Wind: ASCE 7-10; Vult=130mph Vasd=103mph; TCDL=6.0psf; BCDL=6.0psf; h=15ft; Cat. II; Exp C; Enclosed; MWFRS (envelope) gable end zone and C-C Corner(3) -0-10-8 to 3-6-5, Exterior(2) 3-6-5 to 6-9-4 zone;C-C for members and forces & MWFRS for reactions shown; Lumber DOL=1.60 plate grip DOL=1.60
2) Truss designed for wind loads in the plane of the truss only. For studs exposed to wind (normal to the face), see Standard Industry Gable End Details as applicable, or consult qualified building designer as per ANSI/TPI 1.
3) Gable requires continuous bottom chord bearing.
4) Gable studs spaced at 2-0-0 oc.
5) This truss has been designed for a 10.0 psf bottom chord live load nonconcurrent with any other live loads.
6) * This truss has been designed for a live load of 30.0psf on the bottom chord in all areas where a rectangle 3-6-0 tall by 2-0-0 wide will fit between the bottom chord and any other members.
7) Provide mechanical connection (by others) of truss to bearing plate capable of withstanding 100 lb uplift at joint(s) 6, 2, 7, 8.


January 27,2022



ENGINEERING BY TRENCO A MiTek Affiliate
818 Soundside Road
Edenton, NC 27932

| Job | Truss | Truss Type | Qty | Ply | Cates\Lot 678 Lexington Plantation |
|---|---|---|---|---|---|
| J0222-0628 | M3 | HALF HIP GIRDER | 1 | 1 | I49924658<br>Job Reference (optional) |

Comtech, Inc, Fayetteville, NC - 28314, 8.430 s Aug 16 2021 MiTek Industries, Inc. Thu Jan 27 08:53:34 2022 Page 1
ID:mP4IR_1wA7sHHYpJqichtZz2PVG-yVOe?xpH4iu2urJc4qvW0pwHYJ5E0LXY6xUG78zrCSF

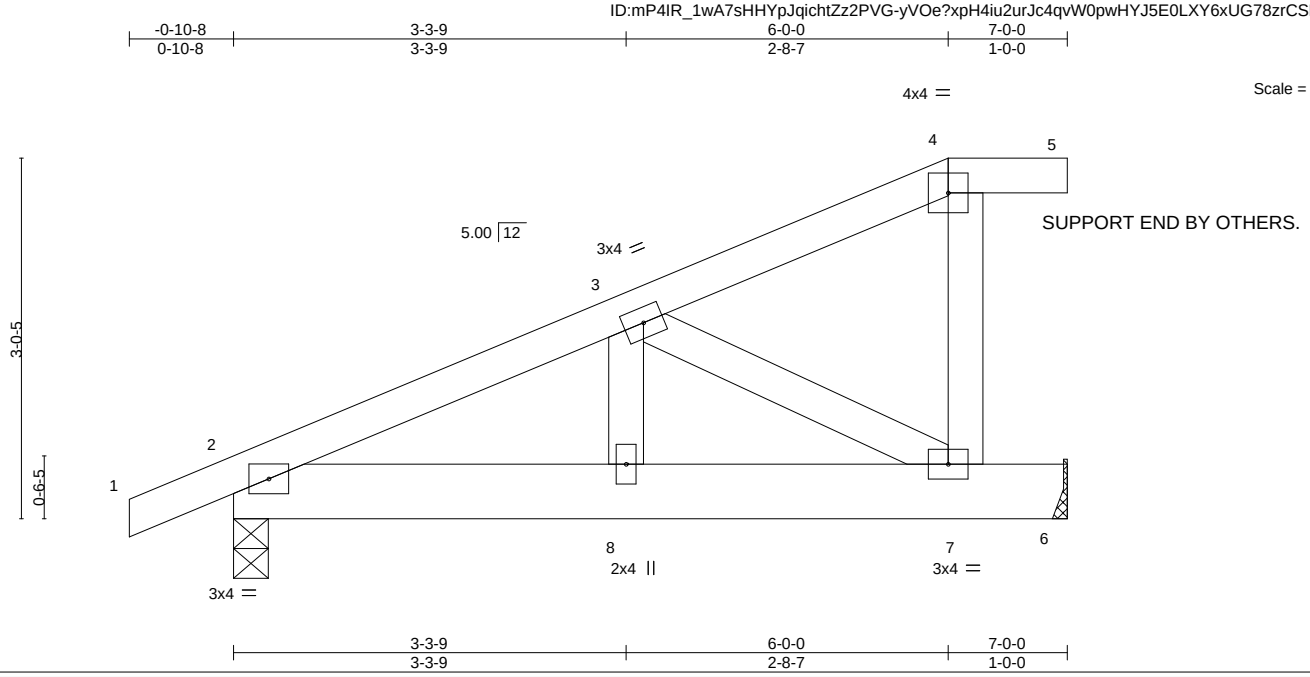


| LOADING (psf) | | SPACING- 2-0-0 | | CSI. | | DEFL. | in | (loc) | l/defl | L/d | PLATES | GRIP |
|---|---|---|---|---|---|---|---|---|---|---|---|---|
| TCLL | 20.0 | Plate Grip DOL | 1.15 | TC | 0.10 | Vert(LL) | -0.02 | 7-8 | >999 | 360 | MT20 | 244/190 |
| TCDL | 10.0 | Lumber DOL | 1.15 | BC | 0.55 | Vert(CT) | -0.04 | 7-8 | >999 | 240 | | |
| BCLL | 0.0 * | Rep Stress Incr | NO | WB | 0.11 | Horz(CT) | 0.00 | 6 | n/a | n/a | | |
| BCDL | 10.0 | Code IRC2015/TPI2014 | | Matrix-P | | Wind(LL) | 0.03 | 7-8 | >999 | 240 | Weight: 38 lb | FT = 20% |

**LUMBER-**
TOP CHORD 2x4 SP No.1
BOT CHORD 2x6 SP No.1
WEBS 2x4 SP No.2

**BRACING-**
TOP CHORD Structural wood sheathing directly applied or 6-0-0 oc purlins, except 2-0-0 oc purlins (6-0-0 max.): 4-5.
BOT CHORD Rigid ceiling directly applied or 10-0-0 oc bracing.

**REACTIONS.** (size) 2=0-3-8, 6=Mechanical
Max Horz 2=92(LC 8)
Max Uplift 2=-119(LC 4), 6=-308(LC 5)
Max Grav 2=401(LC 1), 6=750(LC 1)

**FORCES.** (lb) - Max. Comp./Max. Ten. - All forces 250 (lb) or less except when shown.
TOP CHORD 2-3=-613/177
BOT CHORD 2-8=-197/512, 7-8=-197/512
WEBS 3-8=-153/344, 3-7=-571/219

**NOTES-**
1) Unbalanced roof live loads have been considered for this design.
2) Wind: ASCE 7-10; Vult=130mph Vasd=103mph; TCDL=6.0psf; BCDL=6.0psf; h=15ft; Cat. II; Exp C; Enclosed; MWFRS (envelope); porch left and right exposed; Lumber DOL=1.60 plate grip DOL=1.60
3) Provide adequate drainage to prevent water ponding.
4) This truss has been designed for a 10.0 psf bottom chord live load nonconcurrent with any other live loads.
5) * This truss has been designed for a live load of 30.0psf on the bottom chord in all areas where a rectangle 3-6-0 tall by 2-0-0 wide will fit between the bottom chord and any other members.
6) Refer to girder(s) for truss to truss connections.
7) Provide mechanical connection (by others) of truss to bearing plate capable of withstanding 100 lb uplift at joint(s) except (jt=lb) 2=119, 6=308.
8) Graphical purlin representation does not depict the size or the orientation of the purlin along the top and/or bottom chord.
9) Hanger(s) or other connection device(s) shall be provided sufficient to support concentrated load(s) 542 lb down and 286 lb up at 6-0-0 on bottom chord. The design/selection of such connection device(s) is the responsibility of others.
10) In the LOAD CASE(S) section, loads applied to the face of the truss are noted as front (F) or back (B).

**LOAD CASE(S)** Standard
1) Dead + Roof Live (balanced): Lumber Increase=1.15, Plate Increase=1.15
Uniform Loads (plf)
Vert: 1-4=-60, 4-5=-60, 2-6=-20
Concentrated Loads (lb)
Vert: 7=-542(B)


January 27,2022



ENGINEERING BY TRENCO A MiTek Affiliate
818 Soundside Road
Edenton, NC 27932

| Job | Truss | Truss Type | Qty | Ply | Cates\Lot 678 Lexington Plantation |
|---|---|---|---|---|---|
| J0222-0628 | M6 | MONOPITCH | 4 | 1 | I49924659<br>Job Reference (optional) |

Comtech, Inc, Fayetteville, NC - 28314, 8.430 s Aug 16 2021 MiTek Industries, Inc. Thu Jan 27 08:53:35 2022 Page 1
ID:mP4IR_1wA7sHHYpJqichtZz2PVG-Qhx0CHqvr?0vW?uoeYQlZ0TPpjYrlpUhLbEpfazrCSE

-0-10-8 / 0-10-8 | 5-0-0 / 5-0-0

Scale = 1:15.6

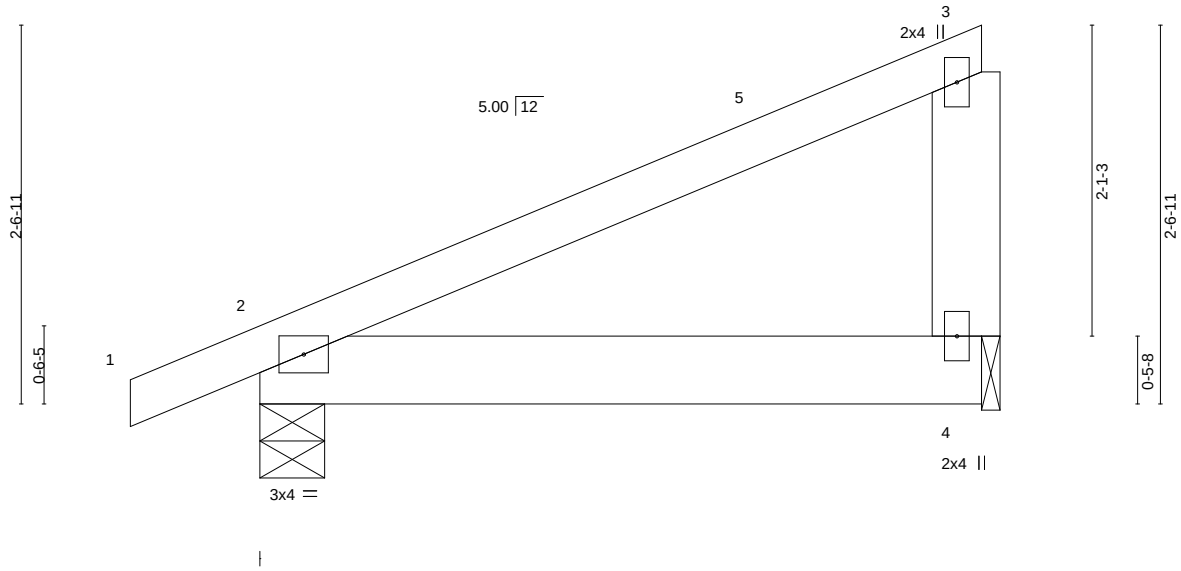


| LOADING (psf) | | SPACING- 2-0-0 | | CSI. | | DEFL. | in | (loc) | l/defl | L/d | PLATES | GRIP |
|---|---|---|---|---|---|---|---|---|---|---|---|---|
| TCLL | 20.0 | Plate Grip DOL | 1.15 | TC | 0.26 | Vert(LL) | -0.01 | 2-4 | >999 | 360 | MT20 | 244/190 |
| TCDL | 10.0 | Lumber DOL | 1.15 | BC | 0.08 | Vert(CT) | -0.01 | 2-4 | >999 | 240 | | |
| BCLL | 0.0 * | Rep Stress Incr | YES | WB | 0.00 | Horz(CT) | 0.00 | | n/a | n/a | | |
| BCDL | 10.0 | Code IRC2015/TPI2014 | | Matrix-P | | Wind(LL) | 0.00 | 2 | **** | 240 | Weight: 25 lb | FT = 20% |

**LUMBER-**
TOP CHORD 2x4 SP No.1
BOT CHORD 2x6 SP No.1
WEBS 2x6 SP No.1

**BRACING-**
TOP CHORD Structural wood sheathing directly applied or 5-0-0 oc purlins, except end verticals.
BOT CHORD Rigid ceiling directly applied or 10-0-0 oc bracing.

**REACTIONS.** (size) 2=0-5-4, 4=0-1-8
Max Horz 2=75(LC 12)
Max Uplift 2=-21(LC 8), 4=-34(LC 12)
Max Grav 2=256(LC 1), 4=174(LC 1)

**FORCES.** (lb) - Max. Comp./Max. Ten. - All forces 250 (lb) or less except when shown.

**NOTES-**
1) Wind: ASCE 7-10; Vult=130mph Vasd=103mph; TCDL=6.0psf; BCDL=6.0psf; h=15ft; Cat. II; Exp C; Enclosed; MWFRS (envelope) and C-C Exterior(2) -0-10-8 to 3-6-5, Interior(1) 3-6-5 to 4-9-4 zone;C-C for members and forces & MWFRS for reactions shown; Lumber DOL=1.60 plate grip DOL=1.60
2) This truss has been designed for a 10.0 psf bottom chord live load nonconcurrent with any other live loads.
3) * This truss has been designed for a live load of 30.0psf on the bottom chord in all areas where a rectangle 3-6-0 tall by 2-0-0 wide will fit between the bottom chord and any other members.
4) Bearing at joint(s) 4 considers parallel to grain value using ANSI/TPI 1 angle to grain formula. Building designer should verify capacity of bearing surface.
5) Provide mechanical connection (by others) of truss to bearing plate at joint(s) 4.
6) Provide mechanical connection (by others) of truss to bearing plate capable of withstanding 100 lb uplift at joint(s) 2, 4.

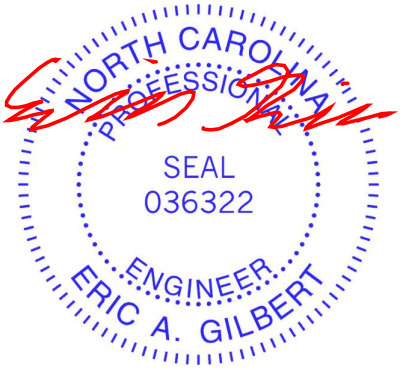


January 27,2022



ENGINEERING BY TRENCO A MiTek Affiliate
818 Soundside Road
Edenton, NC 27932

| Job | Truss | Truss Type | Qty | Ply | Cates\Lot 678 Lexington Plantation |
|---|---|---|---|---|---|
| J0222-0628 | M6A | MONOPITCH | 1 | 1 | I49924660<br>Job Reference (optional) |

Comtech, Inc, Fayetteville, NC - 28314, 8.430 s Aug 16 2021 MiTek Industries, Inc. Thu Jan 27 08:53:36 2022 Page 1
ID:mP4IR_1wA7sHHYpJqichtZz2PVG-utVOPdrXcJ8l78T_CFy_5E0av7uxUGkrZFzNB1zrCSD

-0-10-8 5-0-0
0-10-8 5-0-0

Scale = 1:15.6

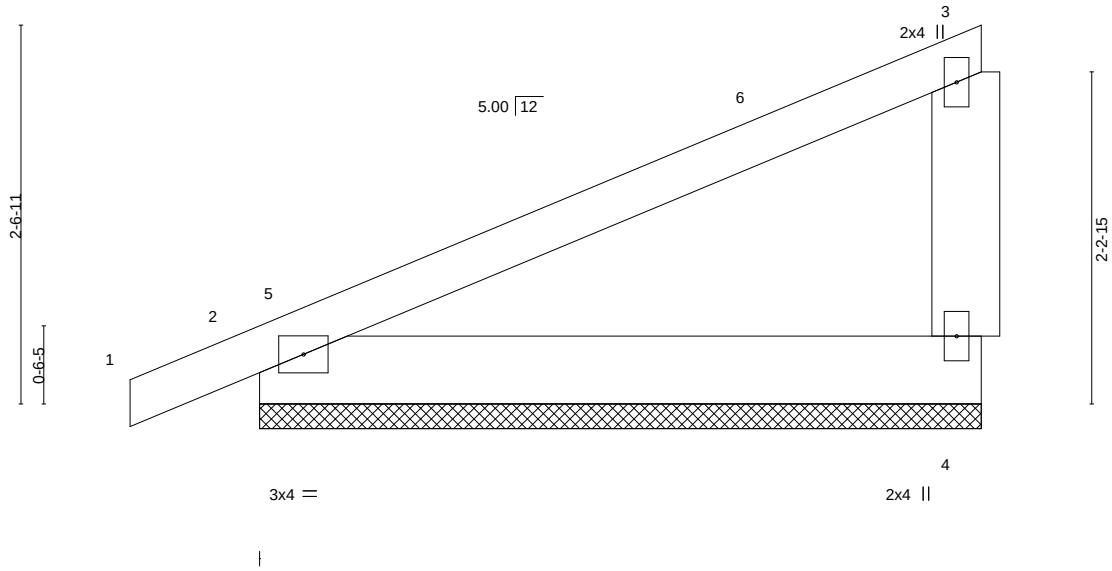


| LOADING (psf) | | SPACING- 2-0-0 | | CSI. | | DEFL. in (loc) l/defl L/d | | PLATES GRIP |
|---|---|---|---|---|---|---|---|---|
| TCLL | 20.0 | Plate Grip DOL | 1.15 | TC | 0.30 | Vert(LL) -0.00 1 n/r 120 | | MT20 244/190 |
| TCDL | 10.0 | Lumber DOL | 1.15 | BC | 0.09 | Vert(CT) 0.01 1 n/r 120 | | |
| BCLL | 0.0 * | Rep Stress Incr | YES | WB | 0.00 | Horz(CT) 0.00 n/a n/a | | |
| BCDL | 10.0 | Code IRC2015/TPI2014 | | Matrix-P | | | | Weight: 25 lb FT = 20% |

**LUMBER-**
TOP CHORD 2x4 SP No.1
BOT CHORD 2x6 SP No.1
WEBS 2x6 SP No.1

**BRACING-**
TOP CHORD Structural wood sheathing directly applied or 5-0-0 oc purlins, except end verticals.
BOT CHORD Rigid ceiling directly applied or 10-0-0 oc bracing.

**REACTIONS.** (size) 4=4-10-8, 2=4-10-8
Max Horz 2=75(LC 12)
Max Uplift 4=-35(LC 12), 2=-18(LC 12)
Max Grav 4=186(LC 1), 2=248(LC 1)

**FORCES.** (lb) - Max. Comp./Max. Ten. - All forces 250 (lb) or less except when shown.

**NOTES-**
1) Wind: ASCE 7-10; Vult=130mph Vasd=103mph; TCDL=6.0psf; BCDL=6.0psf; h=15ft; Cat. II; Exp C; Enclosed; MWFRS (envelope) and C-C Exterior(2) -0-10-8 to 3-6-5, Interior(1) 3-6-5 to 4-9-4 zone;C-C for members and forces & MWFRS for reactions shown; Lumber DOL=1.60 plate grip DOL=1.60
2) Gable requires continuous bottom chord bearing.
3) This truss has been designed for a 10.0 psf bottom chord live load nonconcurrent with any other live loads.
4) * This truss has been designed for a live load of 30.0psf on the bottom chord in all areas where a rectangle 3-6-0 tall by 2-0-0 wide will fit between the bottom chord and any other members.
5) Provide mechanical connection (by others) of truss to bearing plate capable of withstanding 100 lb uplift at joint(s) 4, 2.


January 27,2022



ENGINEERING BY TRENCO A MiTek Affiliate
818 Soundside Road
Edenton, NC 27932

| Job | Truss | Truss Type | Qty | Ply | Cates\Lot 678 Lexington Plantation |
|---|---|---|---|---|---|
| J0222-0628 | V1 | VALLEY | 1 | 1 | I49924661<br>Job Reference (optional) |

Comtech, Inc, Fayetteville, NC - 28314, 8.430 s Aug 16 2021 MiTek Industries, Inc. Thu Jan 27 08:53:37 2022 Page 1
ID:mP4IR_1wA7sHHYpJqichtZz2PVG-M43ndzs9MdGcII1AlzTDeRYn_WDcDhe_ovjwjTzrCSC

Scale: 1/4"=1'

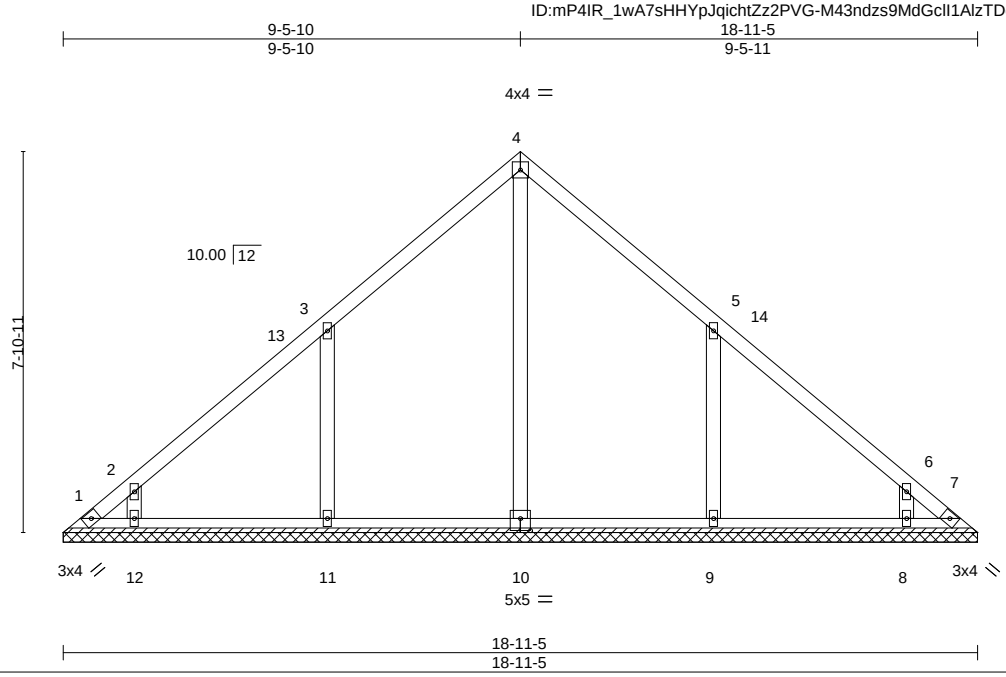


Plate Offsets (X,Y)-- [10:0-2-8,0-3-0]

| LOADING (psf) | | SPACING- 2-0-0 | | CSI. | | DEFL. | in | (loc) | l/defl | L/d | PLATES | GRIP |
|---|---|---|---|---|---|---|---|---|---|---|---|---|
| TCLL | 20.0 | Plate Grip DOL | 1.15 | TC | 0.16 | Vert(LL) | n/a | - | n/a | 999 | MT20 | 244/190 |
| TCDL | 10.0 | Lumber DOL | 1.15 | BC | 0.19 | Vert(CT) | n/a | - | n/a | 999 | | |
| BCLL | 0.0 * | Rep Stress Incr | YES | WB | 0.15 | Horz(CT) | 0.00 | 7 | n/a | n/a | | |
| BCDL | 10.0 | Code IRC2015/TPI2014 | | Matrix-S | | | | | | | Weight: 88 lb | FT = 20% |

**LUMBER-**
TOP CHORD 2x4 SP No.1
BOT CHORD 2x4 SP No.1
OTHERS 2x4 SP No.2

**BRACING-**
TOP CHORD Structural wood sheathing directly applied or 6-0-0 oc purlins.
BOT CHORD Rigid ceiling directly applied or 10-0-0 oc bracing.

**REACTIONS.** All bearings 18-11-5.
(lb) - Max Horz 1=181(LC 9)
Max Uplift All uplift 100 lb or less at joint(s) 7 except 1=-113(LC 10), 11=-141(LC 12), 12=-102(LC 12), 9=-141(LC 13), 8=-102(LC 13)
Max Grav All reactions 250 lb or less at joint(s) 1, 7 except 10=435(LC 22), 11=474(LC 19), 12=273(LC 19), 9=474(LC 20), 8=273(LC 20)

**FORCES.** (lb) - Max. Comp./Max. Ten. - All forces 250 (lb) or less except when shown.
WEBS 3-11=-357/257, 2-12=-280/225, 5-9=-357/254, 6-8=-280/226

**NOTES-**
1) Unbalanced roof live loads have been considered for this design.
2) Wind: ASCE 7-10; Vult=130mph Vasd=103mph; TCDL=6.0psf; BCDL=6.0psf; h=15ft; Cat. II; Exp C; Enclosed; MWFRS (envelope) and C-C Exterior(2) 0-4-13 to 4-9-10, Interior(1) 4-9-10 to 9-5-10, Exterior(2) 9-5-10 to 13-10-7, Interior(1) 13-10-7 to 18-6-8 zone;C-C for members and forces & MWFRS for reactions shown; Lumber DOL=1.60 plate grip DOL=1.60
3) All plates are 2x4 MT20 unless otherwise indicated.
4) This truss has been designed for a 10.0 psf bottom chord live load nonconcurrent with any other live loads.
5) * This truss has been designed for a live load of 30.0psf on the bottom chord in all areas where a rectangle 3-6-0 tall by 2-0-0 wide will fit between the bottom chord and any other members, with BCDL = 10.0psf.
6) Provide mechanical connection (by others) of truss to bearing plate capable of withstanding 100 lb uplift at joint(s) 7 except (jt=lb) 1=113, 11=141, 12=102, 9=141, 8=102.
7) Non Standard bearing condition. Review required.


January 27,2022



ENGINEERING BY TRENCO A MiTek Affiliate
818 Soundside Road
Edenton, NC 27932

| Job | Truss | Truss Type | Qty | Ply | Cates\Lot 678 Lexington Plantation |
|---|---|---|---|---|---|
| J0222-0628 | V2 | VALLEY | 1 | 1 | I49924662<br>Job Reference (optional) |

Comtech, Inc, Fayetteville, NC - 28314, 8.430 s Aug 16 2021 MiTek Industries, Inc. Thu Jan 27 08:53:38 2022 Page 1
ID:mP4IR_1wA7sHHYpJqichtZz2PVG-qGd9qIso7wOTNScNJg_SAf5yuwZEy9k81ZSTGvzrCSB

Scale = 1:38.8

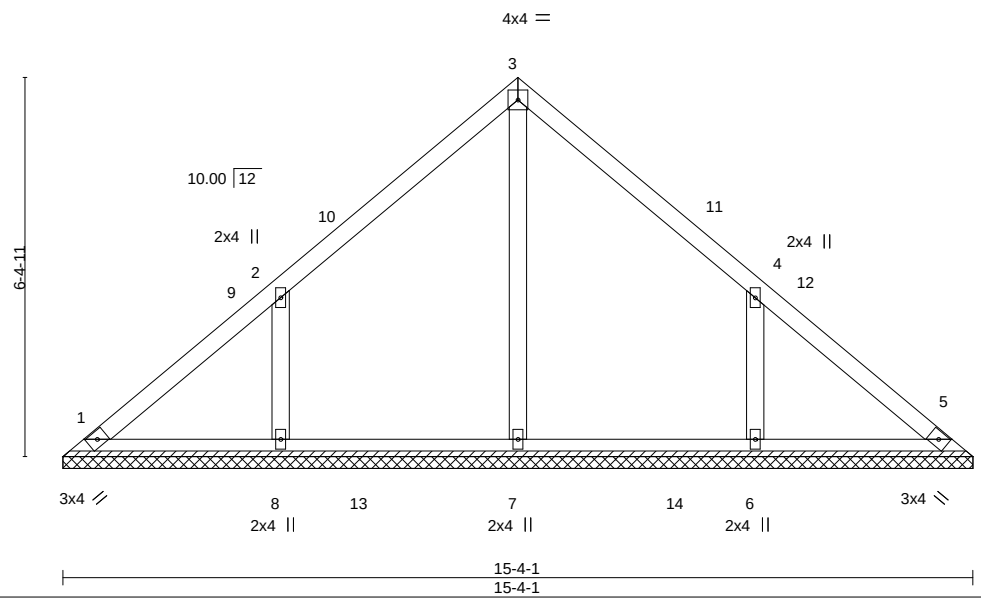


Plate Offsets (X,Y)-- [4:0-0-0,0-0-0]

| LOADING (psf) | | SPACING- 2-0-0 | | CSI. | | DEFL. | in | (loc) | l/defl | L/d | PLATES | GRIP |
|---|---|---|---|---|---|---|---|---|---|---|---|---|
| TCLL | 20.0 | Plate Grip DOL | 1.15 | TC | 0.15 | Vert(LL) | n/a | - | n/a | 999 | MT20 | 244/190 |
| TCDL | 10.0 | Lumber DOL | 1.15 | BC | 0.16 | Vert(CT) | n/a | - | n/a | 999 | | |
| BCLL | 0.0 * | Rep Stress Incr | YES | WB | 0.10 | Horz(CT) | 0.00 | 5 | n/a | n/a | | |
| BCDL | 10.0 | Code IRC2015/TPI2014 | | Matrix-S | | | | | | | Weight: 67 lb | FT = 20% |

**LUMBER-**
TOP CHORD 2x4 SP No.1
BOT CHORD 2x4 SP No.1
OTHERS 2x4 SP No.2

**BRACING-**
TOP CHORD Structural wood sheathing directly applied or 6-0-0 oc purlins.
BOT CHORD Rigid ceiling directly applied or 10-0-0 oc bracing.

**REACTIONS.** All bearings 15-4-1.
(lb) - Max Horz 1=-145(LC 8)
Max Uplift All uplift 100 lb or less at joint(s) 1 except 8=-139(LC 12), 6=-139(LC 13)
Max Grav All reactions 250 lb or less at joint(s) 1, 5 except 7=407(LC 19), 8=413(LC 19), 6=413(LC 20)

**FORCES.** (lb) - Max. Comp./Max. Ten. - All forces 250 (lb) or less except when shown.
WEBS 2-8=-348/251, 4-6=-348/251

**NOTES-**
1) Unbalanced roof live loads have been considered for this design.
2) Wind: ASCE 7-10; Vult=130mph Vasd=103mph; TCDL=6.0psf; BCDL=6.0psf; h=15ft; Cat. II; Exp C; Enclosed; MWFRS (envelope) and C-C Exterior(2) 0-4-13 to 4-9-10, Interior(1) 4-9-10 to 7-8-1, Exterior(2) 7-8-1 to 12-0-14, Interior(1) 12-0-14 to 14-11-4 zone;C-C for members and forces & MWFRS for reactions shown; Lumber DOL=1.60 plate grip DOL=1.60
3) Gable requires continuous bottom chord bearing.
4) This truss has been designed for a 10.0 psf bottom chord live load nonconcurrent with any other live loads.
5) * This truss has been designed for a live load of 30.0psf on the bottom chord in all areas where a rectangle 3-6-0 tall by 2-0-0 wide will fit between the bottom chord and any other members, with BCDL = 10.0psf.
6) Provide mechanical connection (by others) of truss to bearing plate capable of withstanding 100 lb uplift at joint(s) 1 except (jt=lb) 8=139, 6=139.

NORTH CAROLINA PROFESSIONAL SEAL 036322 ENGINEER ERIC A. GILBERT

January 27,2022



ENGINEERING BY TRENCO A MiTek Affiliate
818 Soundside Road
Edenton, NC 27932

| Job | Truss | Truss Type | Qty | Ply | Cates\Lot 678 Lexington Plantation |
|---|---|---|---|---|---|
| J0222-0628 | V3 | VALLEY | 1 | 1 | I49924663<br>Job Reference (optional) |

Comtech, Inc, Fayetteville, NC - 28314, 8.430 s Aug 16 2021 MiTek Industries, Inc. Thu Jan 27 08:53:38 2022 Page 1
ID:mP4IR_1wA7sHHYpJqichtZz2PVG-qGd9qIso7wOTNScNJg_SAf5y8waLyAM81ZSTGvzrCSB

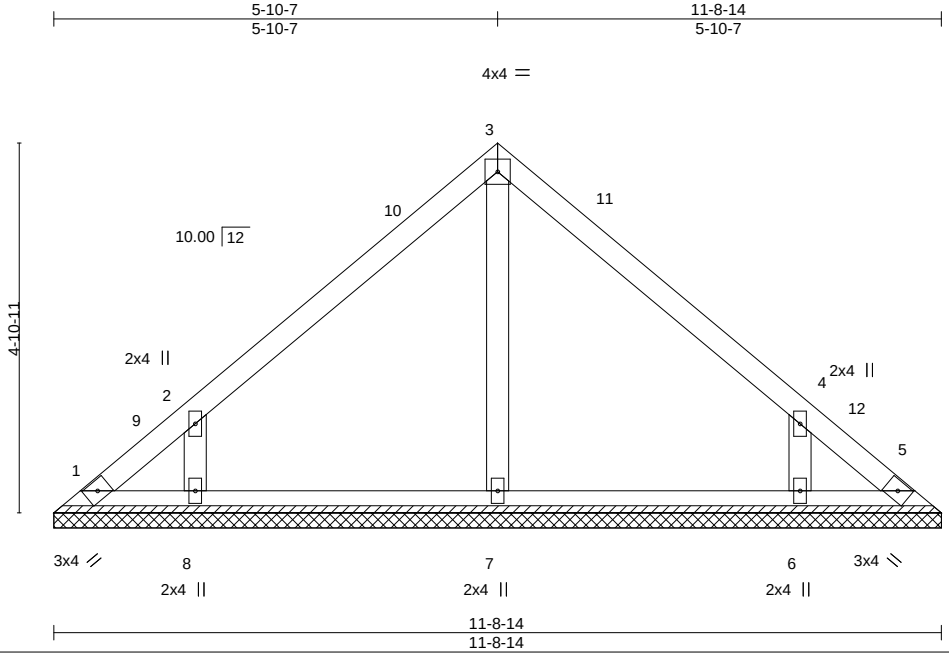


Plate Offsets (X,Y)-- [4:0-0-0,0-0-0]

| LOADING (psf) | | SPACING- 2-0-0 | | CSI. | | DEFL. | in | (loc) | l/defl | L/d | PLATES | GRIP |
|---|---|---|---|---|---|---|---|---|---|---|---|---|
| TCLL | 20.0 | Plate Grip DOL | 1.15 | TC | 0.13 | Vert(LL) | n/a | - | n/a | 999 | MT20 | 244/190 |
| TCDL | 10.0 | Lumber DOL | 1.15 | BC | 0.09 | Vert(CT) | n/a | - | n/a | 999 | | |
| BCLL | 0.0 * | Rep Stress Incr | YES | WB | 0.06 | Horz(CT) | 0.00 | 5 | n/a | n/a | | |
| BCDL | 10.0 | Code IRC2015/TPI2014 | | Matrix-S | | | | | | | Weight: 48 lb | FT = 20% |

**LUMBER-**
TOP CHORD 2x4 SP No.1
BOT CHORD 2x4 SP No.1
OTHERS 2x4 SP No.2

**BRACING-**
TOP CHORD Structural wood sheathing directly applied or 6-0-0 oc purlins.
BOT CHORD Rigid ceiling directly applied or 10-0-0 oc bracing.

**REACTIONS.** All bearings 11-8-14.
(lb) - Max Horz 1=-109(LC 8)
Max Uplift All uplift 100 lb or less at joint(s) 1, 5 except 8=-124(LC 12), 6=-124(LC 13)
Max Grav All reactions 250 lb or less at joint(s) 1, 5, 7 except 8=326(LC 19), 6=325(LC 20)

**FORCES.** (lb) - Max. Comp./Max. Ten. - All forces 250 (lb) or less except when shown.
WEBS 2-8=-317/249, 4-6=-317/249

**NOTES-**
1) Unbalanced roof live loads have been considered for this design.
2) Wind: ASCE 7-10; Vult=130mph Vasd=103mph; TCDL=6.0psf; BCDL=6.0psf; h=15ft; Cat. II; Exp C; Enclosed; MWFRS (envelope) and C-C Exterior(2) 0-4-13 to 4-9-10, Interior(1) 4-9-10 to 5-10-7, Exterior(2) 5-10-7 to 10-3-4, Interior(1) 10-3-4 to 11-4-1 zone;C-C for members and forces & MWFRS for reactions shown; Lumber DOL=1.60 plate grip DOL=1.60
3) Gable requires continuous bottom chord bearing.
4) This truss has been designed for a 10.0 psf bottom chord live load nonconcurrent with any other live loads.
5) * This truss has been designed for a live load of 30.0psf on the bottom chord in all areas where a rectangle 3-6-0 tall by 2-0-0 wide will fit between the bottom chord and any other members.
6) Provide mechanical connection (by others) of truss to bearing plate capable of withstanding 100 lb uplift at joint(s) 1, 5 except (jt=lb) 8=124, 6=124.


January 27,2022



ENGINEERING BY TRENCO A MiTek Affiliate
818 Soundside Road
Edenton, NC 27932

| Job | Truss | Truss Type | Qty | Ply | Cates\Lot 678 Lexington Plantation |
|---|---|---|---|---|---|
| J0222-0628 | V4 | VALLEY | 1 | 1 | I49924664<br>Job Reference (optional) |

Comtech, Inc, Fayetteville, NC - 28314, 8.430 s Aug 16 2021 MiTek Industries, Inc. Thu Jan 27 08:53:39 2022 Page 1
ID:mP4IR_1wA7sHHYpJqichtZz2PVG-ISBX2etQuEXK_cBZtNVhjse6qKwQhd1HFDC1oMzrCSA

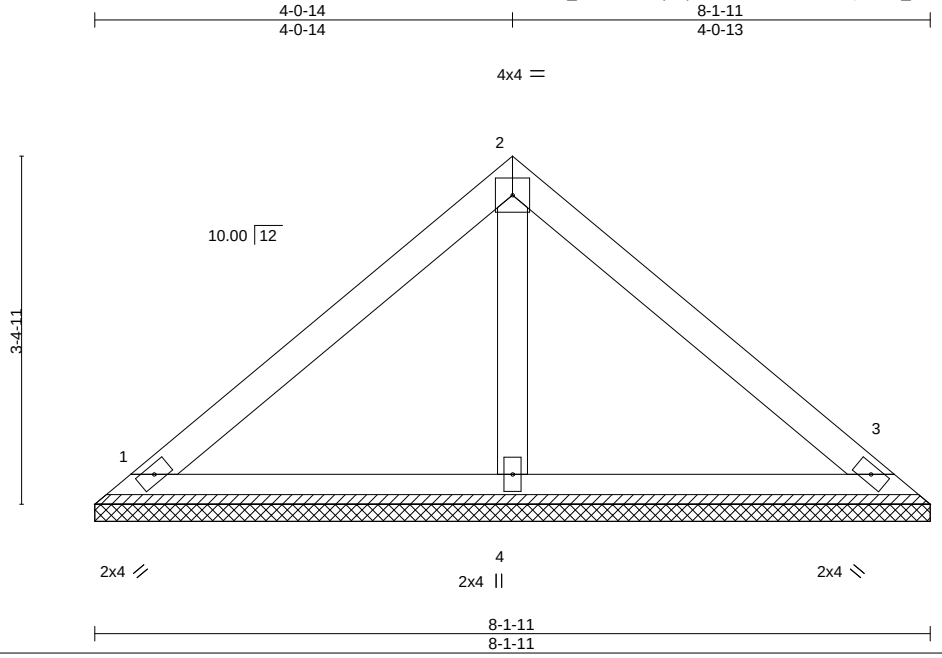


| LOADING (psf) | | SPACING- 2-0-0 | | CSI. | | DEFL. | in | (loc) | l/defl | L/d | PLATES | GRIP |
|---|---|---|---|---|---|---|---|---|---|---|---|---|
| TCLL | 20.0 | Plate Grip DOL | 1.15 | TC | 0.20 | Vert(LL) | n/a | - | n/a | 999 | MT20 | 244/190 |
| TCDL | 10.0 | Lumber DOL | 1.15 | BC | 0.10 | Vert(CT) | n/a | - | n/a | 999 | | |
| BCLL | 0.0 * | Rep Stress Incr | YES | WB | 0.03 | Horz(CT) | 0.00 | 3 | n/a | n/a | | |
| BCDL | 10.0 | Code IRC2015/TPI2014 | | Matrix-P | | | | | | | Weight: 31 lb | FT = 20% |

**LUMBER-**
TOP CHORD 2x4 SP No.1
BOT CHORD 2x4 SP No.1
OTHERS 2x4 SP No.2

**BRACING-**
TOP CHORD Structural wood sheathing directly applied or 6-0-0 oc purlins.
BOT CHORD Rigid ceiling directly applied or 10-0-0 oc bracing.

**REACTIONS.** (size) 1=8-1-11, 3=8-1-11, 4=8-1-11
Max Horz 1=-73(LC 8)
Max Uplift 1=-26(LC 13), 3=-32(LC 13)
Max Grav 1=170(LC 1), 3=170(LC 1), 4=247(LC 1)

**FORCES.** (lb) - Max. Comp./Max. Ten. - All forces 250 (lb) or less except when shown.

**NOTES-**
1) Unbalanced roof live loads have been considered for this design.
2) Wind: ASCE 7-10; Vult=130mph Vasd=103mph; TCDL=6.0psf; BCDL=6.0psf; h=15ft; Cat. II; Exp C; Enclosed; MWFRS (envelope) and C-C Exterior(2) zone;C-C for members and forces & MWFRS for reactions shown; Lumber DOL=1.60 plate grip DOL=1.60
3) Gable requires continuous bottom chord bearing.
4) This truss has been designed for a 10.0 psf bottom chord live load nonconcurrent with any other live loads.
5) * This truss has been designed for a live load of 30.0psf on the bottom chord in all areas where a rectangle 3-6-0 tall by 2-0-0 wide will fit between the bottom chord and any other members.
6) Provide mechanical connection (by others) of truss to bearing plate capable of withstanding 100 lb uplift at joint(s) 1, 3.


January 27,2022



ENGINEERING BY TRENCO A MiTek Affiliate
818 Soundside Road
Edenton, NC 27932

| Job | Truss | Truss Type | Qty | Ply | Cates\Lot 678 Lexington Plantation |
|---|---|---|---|---|---|
| J0222-0628 | V5 | VALLEY | 1 | 1 | I49924665<br>Job Reference (optional) |

Comtech, Inc, Fayetteville, NC - 28314, 8.430 s Aug 16 2021 MiTek Industries, Inc. Thu Jan 27 08:53:40 2022 Page 1
ID:mP4IR_1wA7sHHYpJqichtZz2PVG-nflvF_u2fYfBcmmlR50wG4AKwkGHQ4jQUtxaKozrCS9

Scale = 1:12.2

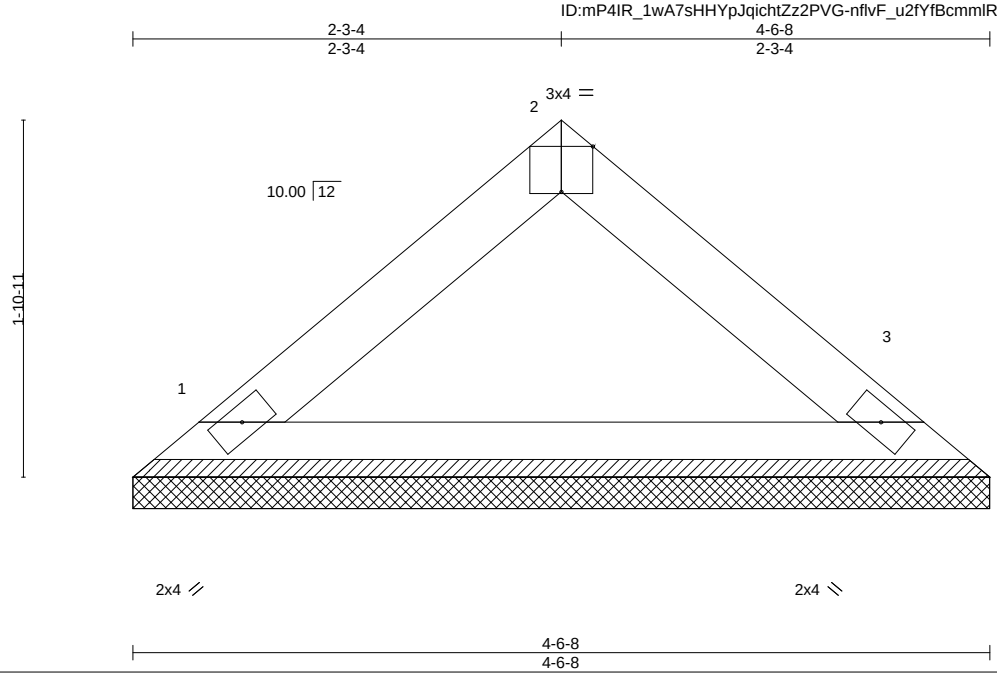


Plate Offsets (X,Y)-- [2:0-2-0,Edge]

| LOADING (psf) | | SPACING- 2-0-0 | | CSI. | | DEFL. | in | (loc) | l/defl | L/d | PLATES | GRIP |
|---|---|---|---|---|---|---|---|---|---|---|---|---|
| TCLL | 20.0 | Plate Grip DOL | 1.15 | TC | 0.05 | Vert(LL) | n/a | - | n/a | 999 | MT20 | 244/190 |
| TCDL | 10.0 | Lumber DOL | 1.15 | BC | 0.12 | Vert(CT) | n/a | - | n/a | 999 | | |
| BCLL | 0.0 * | Rep Stress Incr | YES | WB | 0.00 | Horz(CT) | 0.00 | 3 | n/a | n/a | | |
| BCDL | 10.0 | Code IRC2015/TPI2014 | | Matrix-P | | | | | | | Weight: 14 lb | FT = 20% |

**LUMBER-**
TOP CHORD 2x4 SP No.1
BOT CHORD 2x4 SP No.1

**BRACING-**
TOP CHORD Structural wood sheathing directly applied or 4-6-8 oc purlins.
BOT CHORD Rigid ceiling directly applied or 10-0-0 oc bracing.

**REACTIONS.** (size) 1=4-6-8, 3=4-6-8
Max Horz 1=-37(LC 8)
Max Uplift 1=-7(LC 12), 3=-7(LC 13)
Max Grav 1=149(LC 1), 3=149(LC 1)

**FORCES.** (lb) - Max. Comp./Max. Ten. - All forces 250 (lb) or less except when shown.

**NOTES-**
1) Unbalanced roof live loads have been considered for this design.
2) Wind: ASCE 7-10; Vult=130mph Vasd=103mph; TCDL=6.0psf; BCDL=6.0psf; h=15ft; Cat. II; Exp C; Enclosed; MWFRS (envelope) and C-C Exterior(2) zone;C-C for members and forces & MWFRS for reactions shown; Lumber DOL=1.60 plate grip DOL=1.60
3) This truss has been designed for a 10.0 psf bottom chord live load nonconcurrent with any other live loads.
4) * This truss has been designed for a live load of 30.0psf on the bottom chord in all areas where a rectangle 3-6-0 tall by 2-0-0 wide will fit between the bottom chord and any other members.
5) Provide mechanical connection (by others) of truss to bearing plate capable of withstanding 100 lb uplift at joint(s) 1, 3.
6) Non Standard bearing condition. Review required.


January 27,2022



ENGINEERING BY TRENCO A MiTek Affiliate
818 Soundside Road
Edenton, NC 27932

# Symbols

## PLATE LOCATION AND ORIENTATION

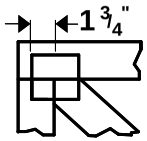


Center plate on joint unless x, y offsets are indicated. Dimensions are in ft-in-sixteenths. Apply plates to both sides of truss and fully embed teeth.

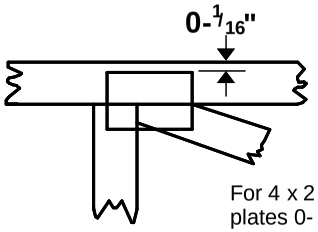


For 4 x 2 orientation, locate plates 0- 1/16" from outside edge of truss.

This symbol indicates the required direction of slots in connector plates.

*** Plate location details available in MiTek 20/20 software or upon request.**

## PLATE SIZE

4 x 4

The first dimension is the plate width measured perpendicular to slots. Second dimension is the length parallel to slots.

## LATERAL BRACING LOCATION

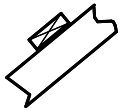

Indicated by symbol shown and/or by text in the bracing section of the output. Use T or I bracing if indicated.

## BEARING

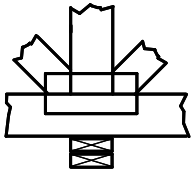

Indicates location where bearings (supports) occur. Icons vary but reaction section indicates joint number where bearings occur. Min size shown is for crushing only.

**Industry Standards:**

ANSI/TPI1: National Design Specification for Metal Plate Connected Wood Truss Construction.
DSB-89: Design Standard for Bracing.
BCSI: Building Component Safety Information, Guide to Good Practice for Handling, Installing & Bracing of Metal Plate Connected Wood Trusses.

# Numbering System

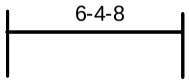


**dimensions shown in ft-in-sixteenths**
(Drawings not to scale)

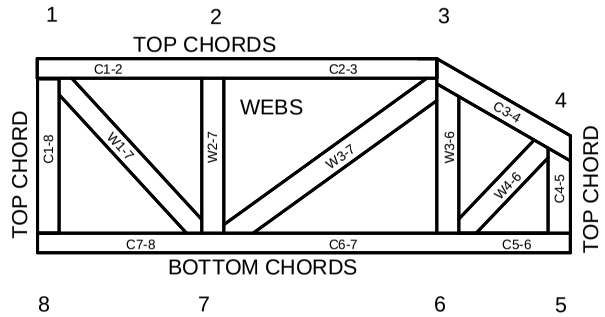


**JOINTS ARE GENERALLY NUMBERED/LETTERED CLOCKWISE AROUND THE TRUSS STARTING AT THE JOINT FARTHEST TO THE LEFT.**

**CHORDS AND WEBS ARE IDENTIFIED BY END JOINT NUMBERS/LETTERS.**

## PRODUCT CODE APPROVALS

ICC-ES Reports:

ESR-1311, ESR-1352, ESR1988
ER-3907, ESR-2362, ESR-1397, ESR-3282

Trusses are designed for wind loads in the plane of the truss unless otherwise shown.

Lumber design values are in accordance with ANSI/TPI 1 section 6.3 These truss designs rely on lumber values established by others.



MiTek

ENGINEERING BY TRENCO
A MiTek Affiliate



# General Safety Notes

## Failure to Follow Could Cause Property Damage or Personal Injury

1. Additional stability bracing for truss system, e.g. diagonal or X-bracing, is always required. See BCSI.
2. Truss bracing must be designed by an engineer. For wide truss spacing, individual lateral braces themselves may require bracing, or alternative Tor I bracing should be considered.
3. Never exceed the design loading shown and never stack materials on inadequately braced trusses.
4. Provide copies of this truss design to the building designer, erection supervisor, property owner and all other interested parties.
5. Cut members to bear tightly against each other.
6. Place plates on each face of truss at each joint and embed fully. Knots and wane at joint locations are regulated by ANSI/TPI 1.
7. Design assumes trusses will be suitably protected from the environment in accord with ANSI/TPI 1.
8. Unless otherwise noted, moisture content of lumber shall not exceed 19% at time of fabrication.
9. Unless expressly noted, this design is not applicable for use with fire retardant, preservative treated, or green lumber.
10. Camber is a non-structural consideration and is the responsibility of truss fabricator. General practice is to camber for dead load deflection.
11. Plate type, size, orientation and location dimensions indicated are minimum plating requirements.
12. Lumber used shall be of the species and size, and in all respects, equal to or better than that specified.
13. Top chords must be sheathed or purlins provided at spacing indicated on design.
14. Bottom chords require lateral bracing at 10 ft. spacing, or less, if no ceiling is installed, unless otherwise noted.
15. Connections not shown are the responsibility of others.
16. Do not cut or alter truss member or plate without prior approval of an engineer.
17. Install and load vertically unless indicated otherwise.
18. Use of green or treated lumber may pose unacceptable environmental, health or performance risks. Consult with project engineer before use.
19. Review all portions of this design (front, back, words and pictures) before use. Reviewing pictures alone is not sufficient.
20. Design assumes manufacture in accordance with ANSI/TPI 1 Quality Criteria.
21. The design does not take into account any dynamic or other loads other than those expressly stated.