ENGINEERING BY TRENCO
A MiTek Affiliate

Trenco
818 Soundside Rd
Edenton, NC 27932

Re: 149_2115_A
KB Home 149.2115.A

The truss drawing(s) referenced below have been prepared by Truss Engineering Co. under my direct supervision based on the parameters provided by 84 Components - #2383.

Pages or sheets covered by this seal: I48384468 thru I48384483

My license renewal date for the state of North Carolina is December 31, 2021.

North Carolina COA: C-0844

NORTH CAROLINA PROFESSIONAL SEAL 044925 ENGINEER SCOTT M. SEVIER

October 18,2021

Sevier, Scott

IMPORTANT NOTE: The seal on these truss component designs is a certification that the engineer named is licensed in the jurisdiction(s) identified and that the designs comply with ANSI/TPI 1. These designs are based upon parameters shown (e.g., loads, supports, dimensions, shapes and design codes), which were given to MiTek or TRENCO. Any project specific information included is for MiTek's or TRENCO's customers file reference purpose only, and was not taken into account in the preparation of these designs. MiTek or TRENCO has not independently verified the applicability of the design parameters or the designs for any particular building. Before use, the building designer should verify applicability of design parameters and properly incorporate these designs into the overall building design per ANSI/TPI 1, Chapter 2.

Job	Truss	Truss Type	Qty	Ply	KB Home 149.2115.A
149_2115_A	A1	Piggyback Base	7	1	I48384468 Job Reference (optional)

84 Components (Dunn), Dunn, NC - 28334, 8.520 s Aug 27 2021 MiTek Industries, Inc. Fri Oct 15 15:11:19 2021 Page 1

ID:cmNXBBvy9jI3gOX4hJTcOZyhfop-3wWefXwUONDYyULVh_yV?pw2WzD?DvoGWdMPUyyT7mM

-0-10-8	6-11-11	13-9-5	20-7-0	29-5-0	36-2-11	43-0-5	49-9-0
0-10-8	6-11-11	6-9-11	6-9-11	8-10-0	6-9-11	6-9-11	6-8-11

Scale = 1:86.0

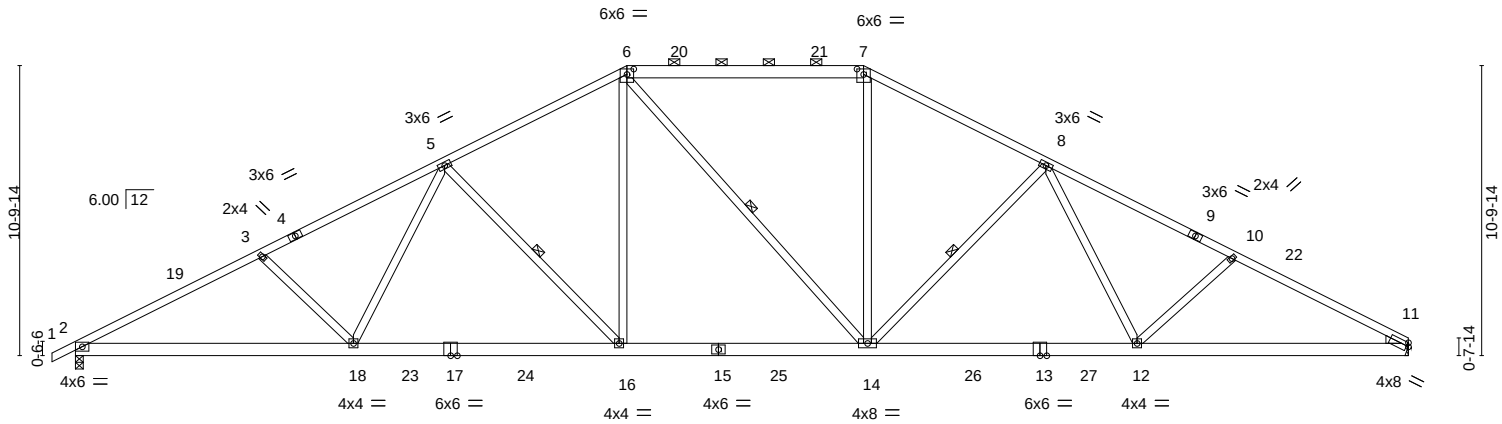

10-4-8	39-7-8	49-9-0
10-4-8	29-3-0	10-1-8

Plate Offsets (X,Y)-- [6:0-3-0,0-2-7], [7:0-3-0,0-2-7], [11:Edge,0-1-10]

LOADING (psf)		**SPACING-** 2-0-0	**CSI.**		**DEFL.**	in	(loc)	l/defl	L/d	**PLATES**	**GRIP**
TCLL	20.0	Plate Grip DOL 1.15	TC	0.88	Vert(LL)	-0.27	16-18	>999	240	MT20	197/144
TCDL	10.0	Lumber DOL 1.15	BC	0.87	Vert(CT)	-0.51	16-18	>999	180		
BCLL	0.0 *	Rep Stress Incr YES	WB	0.35	Horz(CT)	0.15	11	n/a	n/a		
BCDL	10.0	Code IRC2015/TPI2014	Matrix-S							Weight: 321 lb	FT = 20%

LUMBER-

TOP CHORD 2x4 SP No.2 or 2x4 SPF No.2 *Except*
6-7: 2x6 SP No.2, 9-11: 2x4 SP No.1
BOT CHORD 2x6 SP No.2
WEBS 2x4 SP No.3 *Except*
6-14: 2x4 SP No.2 or 2x4 SPF No.2
WEDGE
Right: 2x4 SP No.3

BRACING-

TOP CHORD Structural wood sheathing directly applied, except 2-0-0 oc purlins (3-4-15 max.): 6-7.
BOT CHORD Rigid ceiling directly applied or 10-0-0 oc bracing.
WEBS 1 Row at midpt 5-16, 8-14, 6-14

REACTIONS. (size) 11=Mechanical, 2=0-3-8
Max Horz 2=183(LC 12)
Max Uplift 11=-200(LC 13), 2=-224(LC 12)
Max Grav 11=1981(LC 1), 2=2044(LC 1)

FORCES. (lb) - Max. Comp./Max. Ten. - All forces 250 (lb) or less except when shown.
TOP CHORD 2-3=-3753/527, 3-5=-3526/521, 5-6=-2766/518, 6-7=-2367/512, 7-8=-2733/513, 8-10=-3463/524, 10-11=-3704/546
BOT CHORD 2-18=-437/3249, 16-18=-312/2857, 14-16=-168/2395, 12-14=-298/2815, 11-12=-394/3183
WEBS 3-18=-312/226, 5-18=-40/557, 5-16=-710/272, 6-16=-84/849, 7-14=-42/796, 8-14=-690/270, 8-12=-35/526, 10-12=-285/232

NOTES-

1) Unbalanced roof live loads have been considered for this design.
2) Wind: ASCE 7-10; Vult=130mph Vasd=103mph; TCDL=6.0psf; BCDL=6.0psf; h=25ft; Cat. II; Exp B; Enclosed; MWFRS (envelope) gable end zone and C-C Exterior(2) -0-10-8 to 4-1-3, Interior(1) 4-1-3 to 20-7-0, Exterior(2) 20-7-0 to 27-7-7, Interior(1) 27-7-7 to 29-5-0, Exterior(2) 29-5-0 to 36-2-11, Interior(1) 36-2-11 to 49-8-4 zone;C-C for members and forces & MWFRS for reactions shown; Lumber DOL=1.60 plate grip DOL=1.60
3) Provide adequate drainage to prevent water ponding.
4) This truss has been designed for a 10.0 psf bottom chord live load nonconcurrent with any other live loads.
5) * This truss has been designed for a live load of 20.0psf on the bottom chord in all areas where a rectangle 3-6-0 tall by 2-0-0 wide will fit between the bottom chord and any other members, with BCDL = 10.0psf.
6) Refer to girder(s) for truss to truss connections.
7) Provide mechanical connection (by others) of truss to bearing plate capable of withstanding 200 lb uplift at joint 11.
8) One H2.5A Simpson Strong-Tie connectors recommended to connect truss to bearing walls due to UPLIFT at jt(s) 2. This connection is for uplift only and does not consider lateral forces.
9) Graphical purlin representation does not depict the size or the orientation of the purlin along the top and/or bottom chord.

October 18,2021

WARNING - Verify design parameters and READ NOTES ON THIS AND INCLUDED MITEK REFERENCE PAGE MII-7473 rev. 5/19/2020 BEFORE USE.
Design valid for use only with MiTek® connectors. This design is based only upon parameters shown, and is for an individual building component, not a truss system. Before use, the building designer must verify the applicability of design parameters and properly incorporate this design into the overall building design. Bracing indicated is to prevent buckling of individual truss web and/or chord members only. Additional temporary and permanent bracing is always required for stability and to prevent collapse with possible personal injury and property damage. For general guidance regarding the fabrication, storage, delivery, erection and bracing of trusses and truss systems, see **ANSI/TPI1 Quality Criteria, DSB-89 and BCSI Building Component Safety Information** available from Truss Plate Institute, 2670 Crain Highway, Suite 203 Waldorf, MD 20601

ENGINEERING BY TRENCO A MiTek Affiliate
818 Soundside Road
Edenton, NC 27932

Job	Truss	Truss Type	Qty	Ply	KB Home 149.2115.A
149_2115_A	A1E	Piggyback Base Supported Gable	1	1	I48384469 Job Reference (optional)

84 Components (Dunn), Dunn, NC - 28334, 8.520 s Aug 27 2021 MiTek Industries, Inc. Fri Oct 15 15:11:22 2021 Page 1

ID:cmNXBBvy9jl3gOX4hJTcOZyhfop-UVBmHZyNhIb7px44N6WCdRYkpARTQJqiCba35HyT7mJ

-0-10-8 | 20-7-0 | 29-5-0 | 49-9-0

0-10-8 | 20-7-0 | 8-10-0 | 20-4-0

Scale = 1:87.6

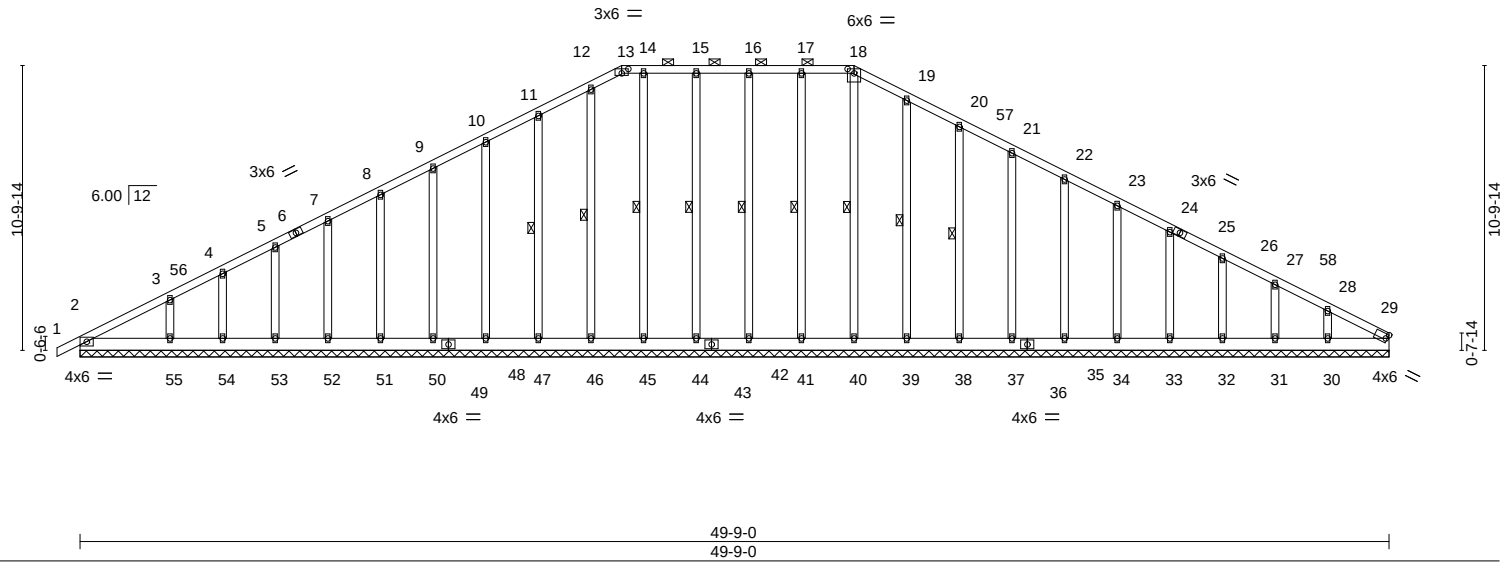

Plate Offsets (X,Y)-- [13:0-3-0,0-2-0], [18:0-3-0,0-2-0]

LOADING (psf)		SPACING- 2-0-0		CSI.		DEFL. in (loc) l/defl L/d					PLATES	GRIP
TCLL	20.0	Plate Grip DOL	1.15	TC	0.11	Vert(LL)	-0.00	1	n/r	120	MT20	197/144
TCDL	10.0	Lumber DOL	1.15	BC	0.05	Vert(CT)	0.00	1	n/r	120		
BCLL	0.0 *	Rep Stress Incr	YES	WB	0.14	Horz(CT)	0.01	29	n/a	n/a		
BCDL	10.0	Code IRC2015/TPI2014		Matrix-S							Weight: 417 lb	FT = 20%

LUMBER-

TOP CHORD 2x4 SP No.2 or 2x4 SPF No.2
BOT CHORD 2x6 SP No.2
OTHERS 2x4 SP No.3

BRACING-

TOP CHORD Structural wood sheathing directly applied or 6-0-0 oc purlins, except 2-0-0 oc purlins (6-0-0 max.): 13-18.
BOT CHORD Rigid ceiling directly applied or 10-0-0 oc bracing.
WEBS 1 Row at midpt 18-40, 17-41, 16-42, 15-44, 14-45, 12-46, 11-47, 19-39, 20-38

REACTIONS. All bearings 49-9-0.
(lb) - Max Horz 2=184(LC 12)
Max Uplift All uplift 100 lb or less at joint(s) 41, 42, 44, 46, 47, 48, 50, 51, 52, 53, 54, 55, 39, 38, 37, 35, 34, 33, 32, 31, 30, 2
Max Grav All reactions 250 lb or less at joint(s) 29, 40, 41, 42, 44, 45, 46, 47, 48, 50, 51, 52, 53, 54, 39, 38, 37, 35, 34, 33, 32, 31, 30, 2 except 55=265(LC 23)

FORCES. (lb) - Max. Comp./Max. Ten. - All forces 250 (lb) or less except when shown.
TOP CHORD 11-12=-99/286, 12-13=-105/299, 13-14=-95/298, 14-15=-95/298, 15-16=-95/298, 16-17=-95/298, 17-18=-95/298, 18-19=-108/314, 19-20=-91/267

NOTES-

1) Unbalanced roof live loads have been considered for this design.
2) Wind: ASCE 7-10; Vult=130mph Vasd=103mph; TCDL=6.0psf; BCDL=6.0psf; h=25ft; Cat. II; Exp B; Enclosed; MWFRS (envelope) gable end zone and C-C Corner(3) -0-10-8 to 4-1-3, Exterior(2) 4-1-3 to 20-7-0, Corner(3) 20-7-0 to 25-5-0, Exterior(2) 25-5-0 to 29-5-0, Corner(3) 29-5-0 to 34-4-11, Exterior(2) 34-4-11 to 49-7-4 zone;C-C for members and forces & MWFRS for reactions shown; Lumber DOL=1.60 plate grip DOL=1.60
3) Truss designed for wind loads in the plane of the truss only. For studs exposed to wind (normal to the face), see Standard Industry Gable End Details as applicable, or consult qualified building designer as per ANSI/TPI 1.
4) Provide adequate drainage to prevent water ponding.
5) All plates are 2x4 MT20 unless otherwise indicated.
6) Gable requires continuous bottom chord bearing.
7) Gable studs spaced at 2-0-0 oc.
8) This truss has been designed for a 10.0 psf bottom chord live load nonconcurrent with any other live loads.
9) * This truss has been designed for a live load of 20.0psf on the bottom chord in all areas where a rectangle 3-6-0 tall by 2-0-0 wide will fit between the bottom chord and any other members.
10) N/A
11) Beveled plate or shim required to provide full bearing surface with truss chord at joint(s) 2.
12) Graphical purlin representation does not depict the size or the orientation of the purlin along the top and/or bottom chord.

October 18,2021

WARNING - Verify design parameters and READ NOTES ON THIS AND INCLUDED MITEK REFERENCE PAGE MII-7473 rev. 5/19/2020 BEFORE USE.
Design valid for use only with MiTek® connectors. This design is based only upon parameters shown, and is for an individual building component, not a truss system. Before use, the building designer must verify the applicability of design parameters and properly incorporate this design into the overall building design. Bracing indicated is to prevent buckling of individual truss web and/or chord members only. Additional temporary and permanent bracing is always required for stability and to prevent collapse with possible personal injury and property damage. For general guidance regarding the fabrication, storage, delivery, erection and bracing of trusses and truss systems, see **ANSI/TPI1 Quality Criteria, DSB-89 and BCSI Building Component Safety Information** available from Truss Plate Institute, 2670 Crain Highway, Suite 203 Waldorf, MD 20601

ENGINEERING BY TRENCO A MiTek Affiliate
818 Soundside Road
Edenton, NC 27932

Job	Truss	Truss Type	Qty	Ply	KB Home 149.2115.A
149_2115_A	A2	PIGGYBACK BASE	3	1	I48384470 Job Reference (optional)

84 Components (Dunn), Dunn, NC - 28334, 8.520 s Aug 27 2021 MiTek Industries, Inc. Fri Oct 15 15:11:23 2021 Page 1
ID:cmNXBBvy9jI3gOX4hJTcOZyhfop-yhl8Uvz?Scj_R5fGwq1RAf5l0acP9ehrQFKcdjyT7mI

-0-10-8	6-11-11	13-9-5	20-7-0	29-5-0	36-2-11	43-0-5	50-0-0	50-10-8
0-10-8	6-11-11	6-9-11	6-9-11	8-10-0	6-9-11	6-9-11	6-11-11	0-10-8

Scale = 1:87.1

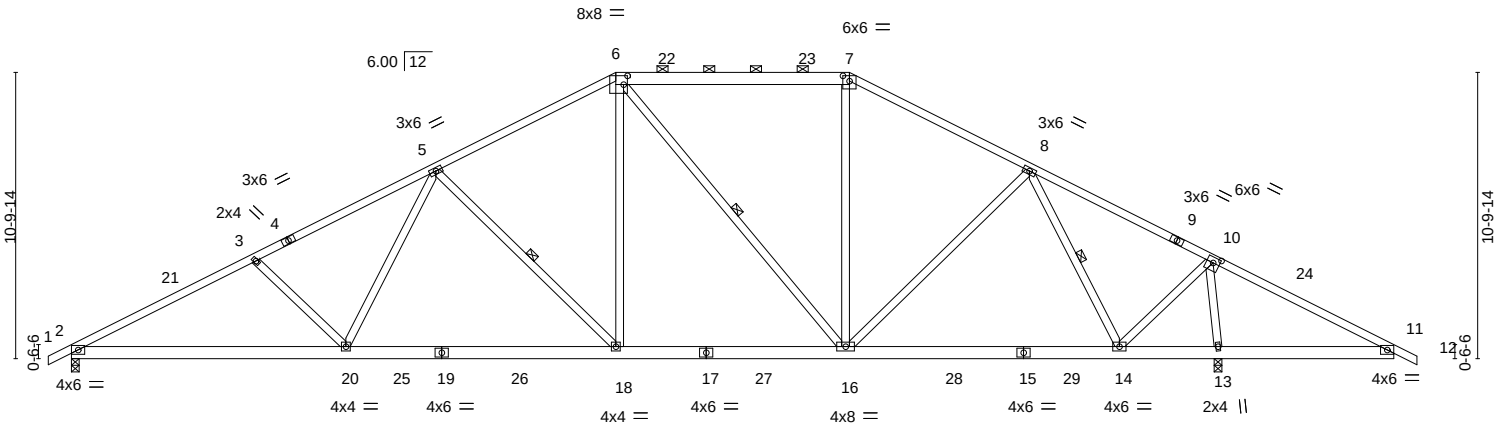

10-4-8	20-7-0	29-5-0	39-7-8	43-6-0	50-0-0
10-4-8	10-2-8	8-10-0	10-2-8	3-10-8	6-6-0

Plate Offsets (X,Y)-- [6:0-1-12,0-4-0], [7:0-3-0,0-2-7], [10:0-3-0,0-2-8]

LOADING (psf)		SPACING- 2-0-0		CSI.		DEFL.	in	(loc)	l/defl	L/d	PLATES	GRIP
TCLL	20.0	Plate Grip DOL	1.15	TC	0.72	Vert(LL)	-0.21	18-20	>999	240	MT20	197/144
TCDL	10.0	Lumber DOL	1.15	BC	0.71	Vert(CT)	-0.38	18-20	>999	180		
BCLL	0.0 *	Rep Stress Incr	YES	WB	0.68	Horz(CT)	0.08	13	n/a	n/a		
BCDL	10.0	Code IRC2015/TPI2014		Matrix-S							Weight: 327 lb	FT = 20%

LUMBER-
TOP CHORD 2x4 SP No.2 or 2x4 SPF No.2 *Except*
6-7: 2x6 SP No.2
BOT CHORD 2x6 SP No.2
WEBS 2x4 SP No.3 *Except*
6-16: 2x4 SP No.2 or 2x4 SPF No.2

BRACING-
TOP CHORD Structural wood sheathing directly applied or 2-3-5 oc purlins, except 2-0-0 oc purlins (4-7-1 max.): 6-7.
BOT CHORD Rigid ceiling directly applied or 6-0-0 oc bracing.
WEBS 1 Row at midpt 5-18, 8-14, 6-16

REACTIONS. (size) 2=0-3-8, 13=(0-3-8 + H10A Simpson Strong-Tie) (req. 0-3-11)
Max Horz 2=179(LC 12)
Max Uplift 2=-218(LC 12), 13=-256(LC 13)
Max Grav 2=1742(LC 1), 13=2360(LC 1)

FORCES. (lb) - Max. Comp./Max. Ten. - All forces 250 (lb) or less except when shown.
TOP CHORD 2-3=-3129/444, 3-5=-2898/430, 5-6=-2093/420, 6-7=-1546/405, 7-8=-1798/393, 8-10=-1032/211, 10-11=-213/670
BOT CHORD 2-20=-420/2699, 18-20=-245/2282, 16-18=-55/1816, 14-16=-103/1301, 13-14=-370/239, 11-13=-504/265
WEBS 3-20=-324/227, 5-20=-37/582, 5-18=-728/271, 6-18=-84/840, 7-16=-14/406, 8-16=-14/385, 8-14=-1120/255, 10-14=-163/1635, 6-16=-491/129, 10-13=-2189/392

NOTES-
1) Unbalanced roof live loads have been considered for this design.
2) Wind: ASCE 7-10; Vult=130mph Vasd=103mph; TCDL=6.0psf; BCDL=6.0psf; h=25ft; Cat. II; Exp B; Enclosed; MWFRS (envelope) gable end zone and C-C Exterior(2) -0-10-8 to 4-1-8, Interior(1) 4-1-8 to 20-7-0, Exterior(2) 20-7-0 to 27-7-14, Interior(1) 27-7-14 to 29-5-0, Exterior(2) 29-5-0 to 36-2-11, Interior(1) 36-2-11 to 50-10-8 zone;C-C for members and forces & MWFRS for reactions shown; Lumber DOL=1.60 plate grip DOL=1.60
3) Provide adequate drainage to prevent water ponding.
4) This truss has been designed for a 10.0 psf bottom chord live load nonconcurrent with any other live loads.
5) * This truss has been designed for a live load of 20.0psf on the bottom chord in all areas where a rectangle 3-6-0 tall by 2-0-0 wide will fit between the bottom chord and any other members, with BCDL = 10.0psf.
6) H10A Simpson Strong-Tie connectors recommended to connect truss to bearing walls due to UPLIFT at jt(s) 13. This connection is for uplift only and does not consider lateral forces.
7) One H2.5A Simpson Strong-Tie connectors recommended to connect truss to bearing walls due to UPLIFT at jt(s) 2. This connection is for uplift only and does not consider lateral forces.
8) Graphical purlin representation does not depict the size or the orientation of the purlin along the top and/or bottom chord.

October 18,2021

WARNING - Verify design parameters and READ NOTES ON THIS AND INCLUDED MITEK REFERENCE PAGE MII-7473 rev. 5/19/2020 BEFORE USE.
Design valid for use only with MiTek® connectors. This design is based only upon parameters shown, and is for an individual building component, not a truss system. Before use, the building designer must verify the applicability of design parameters and properly incorporate this design into the overall building design. Bracing indicated is to prevent buckling of individual truss web and/or chord members only. Additional temporary and permanent bracing is always required for stability and to prevent collapse with possible personal injury and property damage. For general guidance regarding the fabrication, storage, delivery, erection and bracing of trusses and truss systems, see **ANSI/TPI1 Quality Criteria, DSB-89 and BCSI Building Component Safety Information** available from Truss Plate Institute, 2670 Crain Highway, Suite 203 Waldorf, MD 20601

ENGINEERING BY TRENCO A MiTek Affiliate
818 Soundside Road
Edenton, NC 27932

Job	Truss	Truss Type	Qty	Ply	KB Home 149.2115.A
149_2115_A	A3	ROOF TRUSS	4	1	I48384471 Job Reference (optional)

84 Components (Dunn), Dunn, NC - 28334, 8.520 s Aug 27 2021 MiTek Industries, Inc. Fri Oct 15 15:11:25 2021 Page 1

ID:cmNXBBvy9jI3gOX4hJTcOZyhfop-u3tvvb_F_DzigPpf2F3vF4A2KNEhdVw8uZpjhcyT7mG

-0-10-8	6-11-11	13-9-5	20-7-0	24-10-4	25-1-12	29-5-0	36-2-11	43-0-5	50-0-0	50-10-8
0-10-8	6-11-11	6-9-11	6-9-11	4-3-4	0-3-8	4-3-4	6-9-11	6-9-11	6-11-11	0-10-8

Scale = 1:88.7

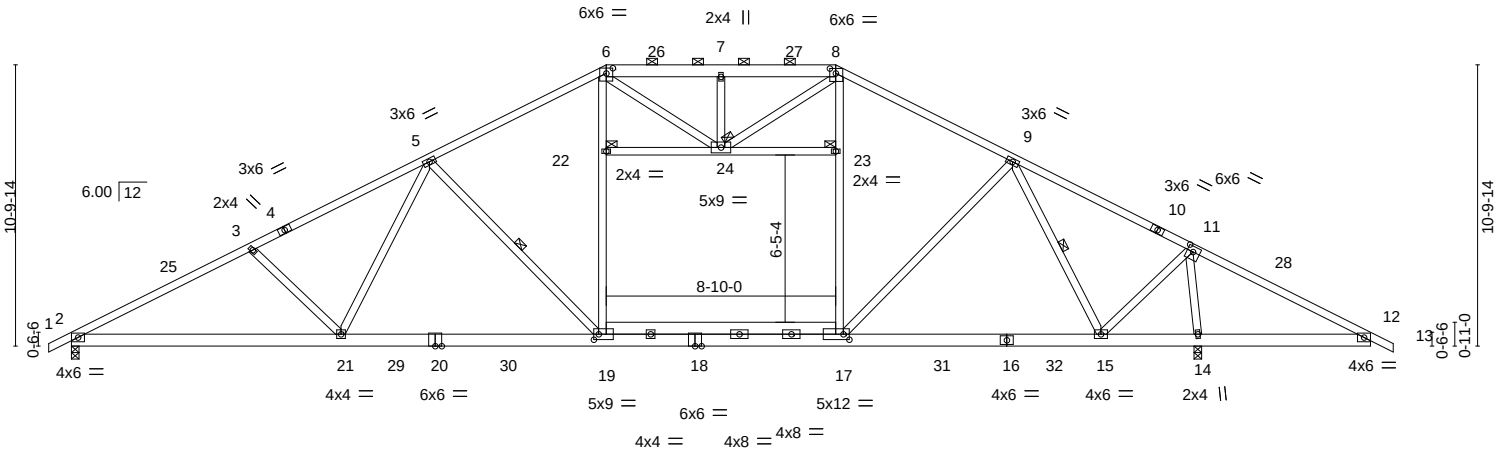

10-4-8	20-7-0	29-5-0	39-7-8	43-6-0	50-0-0
10-4-8	10-2-8	8-10-0	10-2-8	3-10-8	6-6-0

Plate Offsets (X,Y)-- [6:0-3-0,0-2-7], [8:0-2-12,0-2-4], [11:0-2-12,0-2-8], [17:0-2-12,0-2-8], [19:0-2-4,0-2-8]

LOADING (psf)		**SPACING-** 2-0-0		**CSI.**		**DEFL.**	in	(loc)	l/defl	L/d	**PLATES**	**GRIP**
TCLL	20.0	Plate Grip DOL	1.15	TC	0.92	Vert(LL)	-0.67	19-21	>776	240	MT20	197/144
TCDL	10.0	Lumber DOL	1.15	BC	0.98	Vert(CT)	-1.16	19-21	>449	180		
BCLL	0.0 *	Rep Stress Incr	YES	WB	0.89	Horz(CT)	0.08	14	n/a	n/a		
BCDL	10.0	Code IRC2015/TPI2014		Matrix-S		Attic	-0.37	17-19	293	360	Weight: 361 lb	FT = 20%

LUMBER-

TOP CHORD 2x4 SP No.2 or 2x4 SPF No.2 *Except*
6-8: 2x6 SP No.2

BOT CHORD 2x6 SP No.2 *Except*
16-18,18-20: 2x6 SP DSS

WEBS 2x4 SP No.3 *Except*
6-19,8-17: 2x4 SP No.1

BRACING-

TOP CHORD Structural wood sheathing directly applied, except 2-0-0 oc purlins (4-8-14 max.): 6-8.

BOT CHORD Rigid ceiling directly applied or 2-2-0 oc bracing.

WEBS 1 Row at midpt 5-19, 9-15

JOINTS 1 Brace at Jt(s): 22, 23, 24

REACTIONS. (size) 2=0-3-8, 14=(0-3-8 + H10A Simpson Strong-Tie) (req. 0-4-1)
Max Horz 2=179(LC 16)
Max Uplift 2=-194(LC 12), 14=-225(LC 13)
Max Grav 2=1904(LC 2), 14=2579(LC 2)

FORCES. (lb) - Max. Comp./Max. Ten. - All forces 250 (lb) or less except when shown.

TOP CHORD 2-3=-3570/397, 3-5=-3345/383, 5-6=-2444/369, 6-7=-2228/410, 7-8=-2228/410, 8-9=-2335/345, 9-11=-1166/190, 11-12=-210/662

BOT CHORD 2-21=-387/3085, 19-21=-193/2641, 17-19=0/2068, 15-17=-71/1600, 14-15=-363/240, 12-14=-497/262

WEBS 3-21=-304/224, 5-21=-84/682, 5-19=-863/308, 19-22=-17/763, 6-22=-6/779, 17-23=0/519, 8-23=0/541, 9-17=-8/680, 9-15=-1443/268, 11-15=-116/1757, 7-24=-279/131, 8-24=-107/465, 11-14=-2324/341

NOTES-

1) Unbalanced roof live loads have been considered for this design.
2) Wind: ASCE 7-10; Vult=130mph Vasd=103mph; TCDL=6.0psf; BCDL=6.0psf; h=25ft; Cat. II; Exp B; Enclosed; MWFRS (envelope) gable end zone and C-C Exterior(2) -0-10-8 to 4-1-8, Interior(1) 4-1-8 to 20-7-0, Exterior(2) 20-7-0 to 27-7-14, Interior(1) 27-7-14 to 29-5-0, Exterior(2) 29-5-0 to 36-2-11, Interior(1) 36-2-11 to 50-10-8 zone;C-C for members and forces & MWFRS for reactions shown; Lumber DOL=1.60 plate grip DOL=1.60
3) Provide adequate drainage to prevent water ponding.
4) This truss has been designed for a 10.0 psf bottom chord live load nonconcurrent with any other live loads.
5) * This truss has been designed for a live load of 20.0psf on the bottom chord in all areas where a rectangle 3-6-0 tall by 2-0-0 wide will fit between the bottom chord and any other members, with BCDL = 10.0psf.
6) Ceiling dead load (5.0 psf) on member(s). 22-24, 23-24
7) Bottom chord live load (40.0 psf) and additional bottom chord dead load (0.0 psf) applied only to room. 17-19
8) H10A Simpson Strong-Tie connectors recommended to connect truss to bearing walls due to UPLIFT at jt(s) 14. This connection is for uplift only and does not consider lateral forces.
9) One H2.5A Simpson Strong-Tie connectors recommended to connect truss to bearing walls due to UPLIFT at jt(s) 2. This connection is for uplift only and does not consider lateral forces.
10) Graphical purlin representation does not depict the size or the orientation of the purlin along the top and/or bottom chord.
11) ATTIC SPACE SHOWN IS DESIGNED AS UNINHABITABLE.

October 18,2021

WARNING - Verify design parameters and READ NOTES ON THIS AND INCLUDED MITEK REFERENCE PAGE MII-7473 rev. 5/19/2020 BEFORE USE.
Design valid for use only with MiTek® connectors. This design is based only upon parameters shown, and is for an individual building component, not a truss system. Before use, the building designer must verify the applicability of design parameters and properly incorporate this design into the overall building design. Bracing indicated is to prevent buckling of individual truss web and/or chord members only. Additional temporary and permanent bracing is always required for stability and to prevent collapse with possible personal injury and property damage. For general guidance regarding the fabrication, storage, delivery, erection and bracing of trusses and truss systems, see **ANSI/TPI1 Quality Criteria, DSB-89 and BCSI Building Component Safety Information** available from Truss Plate Institute, 2670 Crain Highway, Suite 203 Waldorf, MD 20601

ENGINEERING BY TRENCO A MiTek Affiliate
818 Soundside Road
Edenton, NC 27932

Job	Truss	Truss Type	Qty	Ply	KB Home 149.2115.A
149_2115_A	A4	ROOF TRUSS	2	1	I48384472 Job Reference (optional)

84 Components (Dunn), Dunn, NC - 28334, 8.520 s Aug 27 2021 MiTek Industries, Inc. Fri Oct 15 15:11:26 2021 Page 1

ID:cmNXBBvy9jl3gOX4hJTcOZyhfop-MGRH7x?tlX5ZIZOrcya8nHjDvnbzMzdI7DYHE2yT7mF

-0-10-8	6-11-11	13-9-5	20-7-0	24-8-8	24-10-4	29-5-0	36-2-11	43-0-5	50-0-0	50-10-8
0-10-8	6-11-11	6-9-11	6-9-11	4-1-8	0-1-12	4-6-12	6-9-11	6-9-11	6-11-11	0-10-8

Scale = 1:88.9

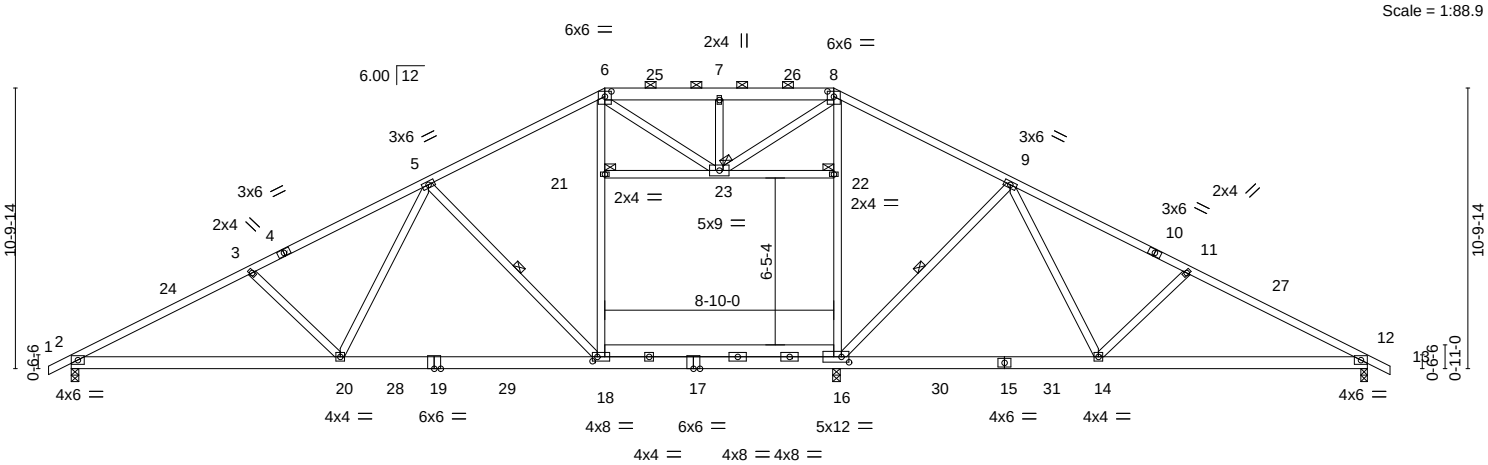

10-4-8	20-7-0	29-5-0	29-6-4	39-7-8	50-0-0
10-4-8	10-2-8	8-10-0	0-1-4	10-1-4	10-4-8

Plate Offsets (X,Y)-- [6:0-3-0,0-2-7], [8:0-3-0,0-2-7], [16:0-3-8,0-2-8], [18:0-2-4,0-2-0]

LOADING (psf)		**SPACING-** 2-0-0		**CSI.**		**DEFL.**	in	(loc)	l/defl	L/d	**PLATES**	**GRIP**
TCLL	20.0	Plate Grip DOL	1.15	TC	0.94	Vert(LL)	-0.51	18-20	>692	240	MT20	197/144
TCDL	10.0	Lumber DOL	1.15	BC	0.91	Vert(CT)	-0.94	18-20	>376	180		
BCLL	0.0 *	Rep Stress Incr	YES	WB	0.79	Horz(CT)	0.12	12	n/a	n/a		
BCDL	10.0	Code IRC2015/TPI2014		Matrix-S		Attic	-0.22	16-18	493	360	Weight: 356 lb	FT = 20%

LUMBER-

TOP CHORD 2x4 SP No.2 or 2x4 SPF No.2 *Except*
6-8: 2x6 SP No.2

BOT CHORD 2x6 SP No.2 *Except*
15-17,17-19: 2x6 SP DSS

WEBS 2x4 SP No.3 *Except*
6-18,8-16: 2x4 SP No.2 or 2x4 SPF No.2

BRACING-

TOP CHORD Structural wood sheathing directly applied, except
2-0-0 oc purlins (4-6-9 max.): 6-8.

BOT CHORD Rigid ceiling directly applied or 10-0-0 oc bracing, Except:
2-2-0 oc bracing: 18-20.

WEBS 1 Row at midpt 5-18, 9-16

JOINTS 1 Brace at Jt(s): 21, 22, 23

REACTIONS. (size) 2=0-3-8, 16=0-3-8, 12=0-3-0
Max Horz 2=179(LC 12)
Max Uplift 2=-262(LC 12), 16=-204(LC 13), 12=-109(LC 12)
Max Grav 2=2013(LC 26), 16=785(LC 27), 12=1891(LC 2)

FORCES. (lb) - Max. Comp./Max. Ten. - All forces 250 (lb) or less except when shown.

TOP CHORD 2-3=-3790/478, 3-5=-3567/471, 5-6=-2713/451, 6-7=-2492/498, 7-8=-2492/498, 8-9=-2609/464, 9-11=-3252/461, 11-12=-3485/476

BOT CHORD 2-20=-507/3280, 18-20=-328/2859, 16-18=-132/2326, 14-16=-195/2661, 12-14=-310/3017

WEBS 3-20=-300/223, 5-20=-51/635, 5-18=-797/281, 18-21=-64/837, 6-21=-54/854, 16-22=-109/719, 8-22=-99/742, 9-16=-683/282, 9-14=-53/509, 11-14=-344/235, 8-23=-88/376, 7-23=-281/132

NOTES-

1) Unbalanced roof live loads have been considered for this design.
2) Wind: ASCE 7-10; Vult=130mph Vasd=103mph; TCDL=6.0psf; BCDL=6.0psf; h=25ft; Cat. II; Exp B; Enclosed; MWFRS (envelope) gable end zone and C-C Exterior(2) -0-10-8 to 4-1-8, Interior(1) 4-1-8 to 20-7-0, Exterior(2) 20-7-0 to 27-7-14, Interior(1) 27-7-14 to 29-5-0, Exterior(2) 29-5-0 to 36-2-11, Interior(1) 36-2-11 to 50-10-8 zone;C-C for members and forces & MWFRS for reactions shown; Lumber DOL=1.60 plate grip DOL=1.60
3) Provide adequate drainage to prevent water ponding.
4) This truss has been designed for a 10.0 psf bottom chord live load nonconcurrent with any other live loads.
5) * This truss has been designed for a live load of 20.0psf on the bottom chord in all areas where a rectangle 3-6-0 tall by 2-0-0 wide will fit between the bottom chord and any other members, with BCDL = 10.0psf.
6) Ceiling dead load (5.0 psf) on member(s). 21-23, 22-23
7) Bottom chord live load (40.0 psf) and additional bottom chord dead load (0.0 psf) applied only to room. 16-18
8) One H2.5A Simpson Strong-Tie connectors recommended to connect truss to bearing walls due to UPLIFT at jt(s) 2, 16, and 12. This connection is for uplift only and does not consider lateral forces.
9) Graphical purlin representation does not depict the size or the orientation of the purlin along the top and/or bottom chord.
10) ATTIC SPACE SHOWN IS DESIGNED AS UNINHABITABLE.

NORTH CAROLINA PROFESSIONAL SEAL 044925 ENGINEER SCOTT M. SEVIER

October 18,2021

WARNING - Verify design parameters and READ NOTES ON THIS AND INCLUDED MITEK REFERENCE PAGE MII-7473 rev. 5/19/2020 BEFORE USE.
Design valid for use only with MiTek® connectors. This design is based only upon parameters shown, and is for an individual building component, not a truss system. Before use, the building designer must verify the applicability of design parameters and properly incorporate this design into the overall building design. Bracing indicated is to prevent buckling of individual truss web and/or chord members only. Additional temporary and permanent bracing is always required for stability and to prevent collapse with possible personal injury and property damage. For general guidance regarding the fabrication, storage, delivery, erection and bracing of trusses and truss systems, see **ANSI/TPI1 Quality Criteria, DSB-89 and BCSI Building Component Safety Information** available from Truss Plate Institute, 2670 Crain Highway, Suite 203 Waldorf, MD 20601

ENGINEERING BY TRENCO A MiTek Affiliate
818 Soundside Road
Edenton, NC 27932

Job	Truss	Truss Type	Qty	Ply	KB Home 149.2115.A
149_2115_A	A5	PIGGYBACK BASE	8	1	I48384473 Job Reference (optional)

84 Components (Dunn), Dunn, NC - 28334, 8.520 s Aug 27 2021 MiTek Industries, Inc. Fri Oct 15 15:11:28 2021 Page 1

ID:cmNXBBvy9jI3gOX4hJTcOZyhfop-IeY1Yc18H8LHXsXEjNdctiodAbMfqrhaaX1NIxyT7mD

-0-10-8	6-11-11	13-9-5	20-7-0	25-0-0	29-5-0	36-2-11	43-0-5	50-0-0	50-10-8
0-10-8	6-11-11	6-9-11	6-9-11	4-5-0	4-5-0	6-9-11	6-9-11	6-11-11	0-10-8

Scale = 1:86.7

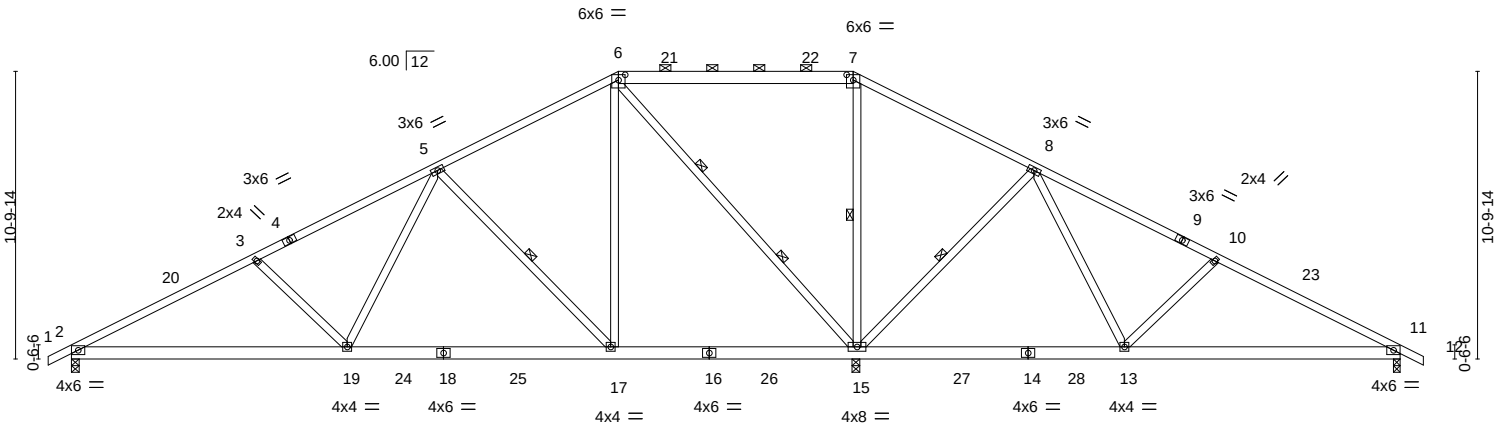

10-4-8	20-7-0	29-5-0	29-6-4	39-7-8	50-0-0
10-4-8	10-2-8	8-10-0	0-1-4	10-1-4	10-4-8

Plate Offsets (X,Y)-- [6:0-3-0,0-2-7], [7:0-3-0,0-2-7]

LOADING (psf)		**SPACING-** 2-0-0	**CSI.**		**DEFL.** in (loc) l/defl L/d	**PLATES**	**GRIP**
TCLL	20.0	Plate Grip DOL 1.15	TC	0.69	Vert(LL) -0.11 17-19 >999 240	MT20	197/144
TCDL	10.0	Lumber DOL 1.15	BC	0.52	Vert(CT) -0.20 2-19 >999 180		
BCLL	0.0 *	Rep Stress Incr YES	WB	0.95	Horz(CT) 0.03 15 n/a n/a		
BCDL	10.0	Code IRC2015/TPI2014	Matrix-S			Weight: 323 lb	FT = 20%

LUMBER-

TOP CHORD 2x4 SP No.2 or 2x4 SPF No.2 *Except*
6-7: 2x6 SP No.2
BOT CHORD 2x6 SP No.2
WEBS 2x4 SP No.3 *Except*
6-15: 2x4 SP No.2 or 2x4 SPF No.2

BRACING-

TOP CHORD Structural wood sheathing directly applied or 3-11-8 oc purlins, except
2-0-0 oc purlins (10-0-0 max.): 6-7.
BOT CHORD Rigid ceiling directly applied or 6-0-0 oc bracing.
WEBS 1 Row at midpt 5-17, 7-15, 8-15
2 Rows at 1/3 pts 6-15

REACTIONS. (size) 2=0-3-8, 15=(0-3-8 + H10A Simpson Strong-Tie) (req. 0-4-4), 11=0-3-0
Max Horz 2=179(LC 12)
Max Uplift 2=-156(LC 12), 15=-166(LC 12), 11=-128(LC 13)
Max Grav 2=1015(LC 23), 15=2729(LC 2), 11=562(LC 24)

FORCES. (lb) - Max. Comp./Max. Ten. - All forces 250 (lb) or less except when shown.
TOP CHORD 2-3=-1574/250, 3-5=-1277/219, 5-6=-440/186, 6-7=0/776, 7-8=-24/965, 8-10=-309/257, 10-11=-614/193
BOT CHORD 2-19=-306/1314, 17-19=-125/817, 15-17=-33/385, 13-15=-365/184, 11-13=-101/468
WEBS 3-19=-368/231, 5-19=-44/605, 5-17=-752/275, 6-17=-86/871, 7-15=-848/209, 8-15=-769/276, 8-13=-46/620, 10-13=-398/233, 6-15=-1501/242

NOTES-

1) Unbalanced roof live loads have been considered for this design.
2) Wind: ASCE 7-10; Vult=130mph Vasd=103mph; TCDL=6.0psf; BCDL=6.0psf; h=25ft; Cat. II; Exp B; Enclosed; MWFRS (envelope) gable end zone and C-C Exterior(2) -0-10-8 to 4-1-8, Interior(1) 4-1-8 to 20-7-0, Exterior(2) 20-7-0 to 27-7-14, Interior(1) 27-7-14 to 29-5-0, Exterior(2) 29-5-0 to 36-2-11, Interior(1) 36-2-11 to 50-10-8 zone;C-C for members and forces & MWFRS for reactions shown; Lumber DOL=1.60 plate grip DOL=1.60
3) Provide adequate drainage to prevent water ponding.
4) This truss has been designed for a 10.0 psf bottom chord live load nonconcurrent with any other live loads.
5) * This truss has been designed for a live load of 20.0psf on the bottom chord in all areas where a rectangle 3-6-0 tall by 2-0-0 wide will fit between the bottom chord and any other members, with BCDL = 10.0psf.
6) H10A Simpson Strong-Tie connectors recommended to connect truss to bearing walls due to UPLIFT at jt(s) 15. This connection is for uplift only and does not consider lateral forces.
7) One H2.5A Simpson Strong-Tie connectors recommended to connect truss to bearing walls due to UPLIFT at jt(s) 2 and 11. This connection is for uplift only and does not consider lateral forces.
8) Graphical purlin representation does not depict the size or the orientation of the purlin along the top and/or bottom chord.

October 18,2021

WARNING - Verify design parameters and READ NOTES ON THIS AND INCLUDED MITEK REFERENCE PAGE MII-7473 rev. 5/19/2020 BEFORE USE.
Design valid for use only with MiTek® connectors. This design is based only upon parameters shown, and is for an individual building component, not a truss system. Before use, the building designer must verify the applicability of design parameters and properly incorporate this design into the overall building design. Bracing indicated is to prevent buckling of individual truss web and/or chord members only. Additional temporary and permanent bracing is always required for stability and to prevent collapse with possible personal injury and property damage. For general guidance regarding the fabrication, storage, delivery, erection and bracing of trusses and truss systems, see **ANSI/TPI1 Quality Criteria, DSB-89 and BCSI Building Component Safety Information** available from Truss Plate Institute, 2670 Crain Highway, Suite 203 Waldorf, MD 20601

ENGINEERING BY TRENCO A MiTek Affiliate
818 Soundside Road
Edenton, NC 27932

Job	Truss	Truss Type	Qty	Ply	KB Home 149.2115.A
149_2115_A	A5E	Piggyback Base Supported Gable	1	1	I48384474 Job Reference (optional)

84 Components (Dunn), Dunn, NC - 28334, 8.520 s Aug 27 2021 MiTek Industries, Inc. Fri Oct 15 15:11:30 2021 Page 1
ID:cmNXBBvy9jI3gOX4hJTcOZyhfop-F1goyI2Opmc?nAhcrof4y7t6nOALIxpt1rWUNpyT7mB

-0-10-8 | 20-7-0 | 29-5-0 | 50-0-0 | 50-10-8
0-10-8 | 20-7-0 | 8-10-0 | 20-7-0 | 0-10-8

Scale = 1:87.9

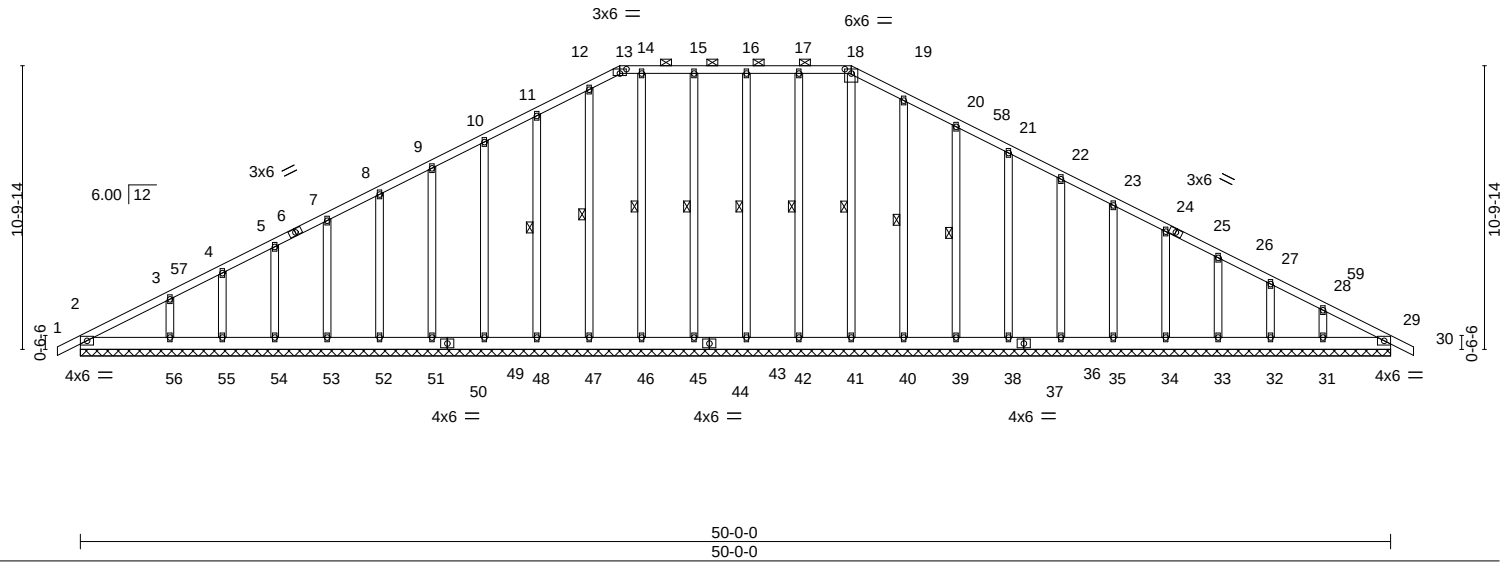

Plate Offsets (X,Y)-- [13:0-3-0,0-2-0], [18:0-3-0,0-2-0]

LOADING (psf)		SPACING- 2-0-0		CSI.		DEFL. in (loc) l/defl L/d					PLATES	GRIP
TCLL	20.0	Plate Grip DOL	1.15	TC	0.11	Vert(LL)	0.00	29	n/r	120	MT20	197/144
TCDL	10.0	Lumber DOL	1.15	BC	0.05	Vert(CT)	0.00	29	n/r	120		
BCLL	0.0 *	Rep Stress Incr	YES	WB	0.14	Horz(CT)	0.01	29	n/a	n/a		
BCDL	10.0	Code IRC2015/TPI2014		Matrix-S							Weight: 419 lb	FT = 20%

LUMBER-
TOP CHORD 2x4 SP No.2 or 2x4 SPF No.2
BOT CHORD 2x6 SP No.2
OTHERS 2x4 SP No.3

BRACING-
TOP CHORD Structural wood sheathing directly applied or 6-0-0 oc purlins, except 2-0-0 oc purlins (6-0-0 max.): 13-18.
BOT CHORD Rigid ceiling directly applied or 10-0-0 oc bracing.
WEBS 1 Row at midpt 18-41, 17-42, 16-43, 15-45, 14-46, 12-47, 11-48, 19-40, 20-39

REACTIONS. All bearings 50-0-0.
(lb) - Max Horz 2=179(LC 12)
Max Uplift All uplift 100 lb or less at joint(s) 42, 43, 45, 47, 48, 49, 51, 52, 53, 54, 55, 56, 40, 39, 38, 36, 35, 34, 33, 32, 31, 2
Max Grav All reactions 250 lb or less at joint(s) 29, 41, 42, 43, 45, 46, 47, 48, 49, 51, 52, 53, 54, 55, 40, 39, 38, 36, 35, 34, 33, 32, 31, 2 except 56=265(LC 23)

FORCES. (lb) - Max. Comp./Max. Ten. - All forces 250 (lb) or less except when shown.
TOP CHORD 11-12=-100/290, 12-13=-106/302, 13-14=-96/300, 14-15=-96/300, 15-16=-96/300, 16-17=-96/300, 17-18=-96/300, 18-19=-109/316, 19-20=-91/269

NOTES-
1) Unbalanced roof live loads have been considered for this design.
2) Wind: ASCE 7-10; Vult=130mph Vasd=103mph; TCDL=6.0psf; BCDL=6.0psf; h=25ft; Cat. II; Exp B; Enclosed; MWFRS (envelope) gable end zone and C-C Corner(3) -0-10-8 to 4-1-8, Exterior(2) 4-1-8 to 20-7-0, Corner(3) 20-7-0 to 25-5-0, Exterior(2) 25-5-0 to 29-5-0, Corner(3) 29-5-0 to 34-5-0, Exterior(2) 34-5-0 to 50-10-8 zone;C-C for members and forces & MWFRS for reactions shown; Lumber DOL=1.60 plate grip DOL=1.60
3) Truss designed for wind loads in the plane of the truss only. For studs exposed to wind (normal to the face), see Standard Industry Gable End Details as applicable, or consult qualified building designer as per ANSI/TPI 1.
4) Provide adequate drainage to prevent water ponding.
5) All plates are 2x4 MT20 unless otherwise indicated.
6) Gable requires continuous bottom chord bearing.
7) Gable studs spaced at 2-0-0 oc.
8) This truss has been designed for a 10.0 psf bottom chord live load nonconcurrent with any other live loads.
9) * This truss has been designed for a live load of 20.0psf on the bottom chord in all areas where a rectangle 3-6-0 tall by 2-0-0 wide will fit between the bottom chord and any other members.
10) N/A

11) Graphical purlin representation does not depict the size or the orientation of the purlin along the top and/or bottom chord.

October 18,2021

WARNING - Verify design parameters and READ NOTES ON THIS AND INCLUDED MITEK REFERENCE PAGE MII-7473 rev. 5/19/2020 BEFORE USE.
Design valid for use only with MiTek® connectors. This design is based only upon parameters shown, and is for an individual building component, not a truss system. Before use, the building designer must verify the applicability of design parameters and properly incorporate this design into the overall building design. Bracing indicated is to prevent buckling of individual truss web and/or chord members only. Additional temporary and permanent bracing is always required for stability and to prevent collapse with possible personal injury and property damage. For general guidance regarding the fabrication, storage, delivery, erection and bracing of trusses and truss systems, see **ANSI/TPI1 Quality Criteria, DSB-89 and BCSI Building Component Safety Information** available from Truss Plate Institute, 2670 Crain Highway, Suite 203 Waldorf, MD 20601

ENGINEERING BY TRENCO A MiTek Affiliate
818 Soundside Road
Edenton, NC 27932

Job	Truss	Truss Type	Qty	Ply	KB Home 149.2115.A
149_2115_A	B1	Common	4	1	I48384475 Job Reference (optional)

84 Components (Dunn), Dunn, NC - 28334, 8.520 s Aug 27 2021 MiTek Industries, Inc. Fri Oct 15 15:11:32 2021 Page 1
ID:cmNXBBvy9jI3gOX4hJTcOZyhfop-BQoYN_4eKNsi0Ur?yDhY1YyI4CiQmr7AV9?bRiyT7m9

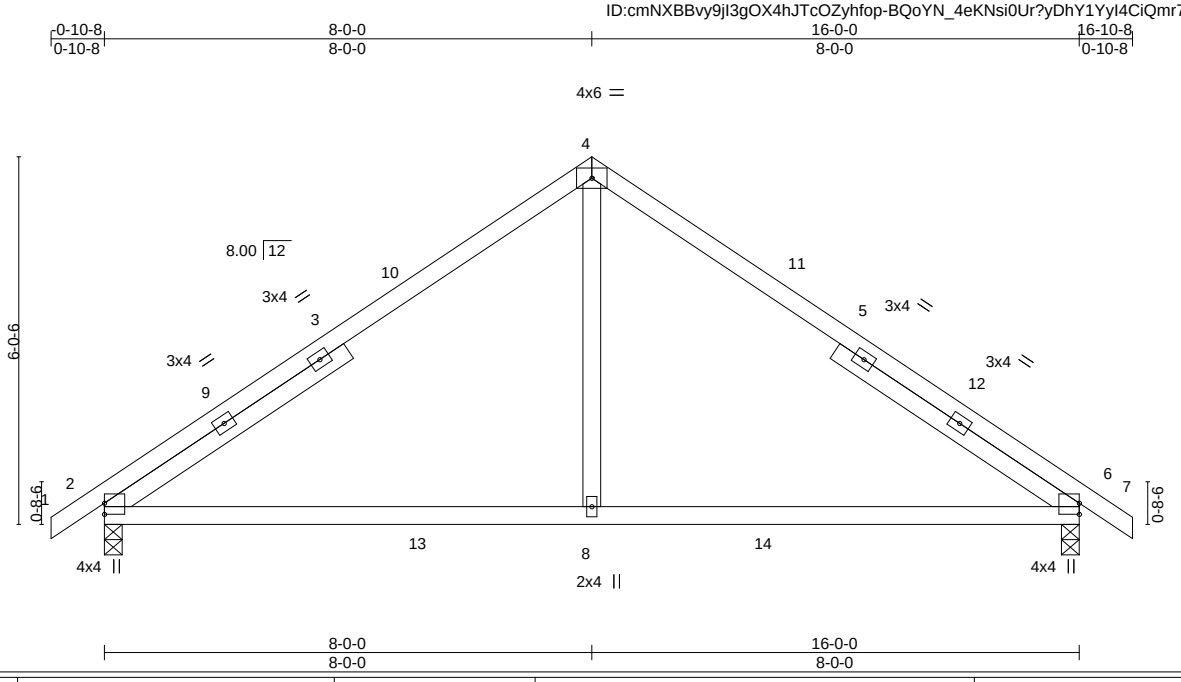

LOADING (psf)			SPACING- 2-0-0	CSI.		DEFL. in (loc) l/defl L/d					PLATES	GRIP
TCLL	20.0		Plate Grip DOL 1.15	TC	0.76	Vert(LL)	-0.08	2-8	>999	240	MT20	197/144
TCDL	10.0		Lumber DOL 1.15	BC	0.66	Vert(CT)	-0.17	2-8	>999	180		
BCLL	0.0	*	Rep Stress Incr YES	WB	0.15	Horz(CT)	0.01	6	n/a	n/a		
BCDL	10.0		Code IRC2015/TPI2014	Matrix-S							Weight: 78 lb	FT = 20%

LUMBER-
TOP CHORD 2x4 SP No.1
BOT CHORD 2x4 SP No.2 or 2x4 SPF No.2
WEBS 2x4 SP No.3
SLIDER Left 2x4 SP No.3 4-9-0, Right 2x4 SP No.3 4-9-0

BRACING-
TOP CHORD Structural wood sheathing directly applied or 4-10-5 oc purlins.
BOT CHORD Rigid ceiling directly applied or 10-0-0 oc bracing.

REACTIONS. (size) 2=0-3-8, 6=0-3-8
Max Horz 2=-146(LC 10)
Max Uplift 2=-86(LC 12), 6=-86(LC 13)
Max Grav 2=722(LC 19), 6=722(LC 20)

FORCES. (lb) - Max. Comp./Max. Ten. - All forces 250 (lb) or less except when shown.
TOP CHORD 2-4=-809/110, 4-6=-809/110
BOT CHORD 2-8=-2/616, 6-8=-2/616
WEBS 4-8=0/399

NOTES-
1) Unbalanced roof live loads have been considered for this design.
2) Wind: ASCE 7-10; Vult=130mph Vasd=103mph; TCDL=6.0psf; BCDL=6.0psf; h=25ft; Cat. II; Exp B; Enclosed; MWFRS (envelope) gable end zone and C-C Exterior(2) -0-10-8 to 2-1-8, Interior(1) 2-1-8 to 8-0-0, Exterior(2) 8-0-0 to 11-0-0, Interior(1) 11-0-0 to 16-10-8 zone;C-C for members and forces & MWFRS for reactions shown; Lumber DOL=1.60 plate grip DOL=1.60
3) This truss has been designed for a 10.0 psf bottom chord live load nonconcurrent with any other live loads.
4) * This truss has been designed for a live load of 20.0psf on the bottom chord in all areas where a rectangle 3-6-0 tall by 2-0-0 wide will fit between the bottom chord and any other members, with BCDL = 10.0psf.
5) One H2.5A Simpson Strong-Tie connectors recommended to connect truss to bearing walls due to UPLIFT at jt(s) 2 and 6. This connection is for uplift only and does not consider lateral forces.

October 18,2021

WARNING - Verify design parameters and READ NOTES ON THIS AND INCLUDED MITEK REFERENCE PAGE MII-7473 rev. 5/19/2020 BEFORE USE.
Design valid for use only with MiTek® connectors. This design is based only upon parameters shown, and is for an individual building component, not a truss system. Before use, the building designer must verify the applicability of design parameters and properly incorporate this design into the overall building design. Bracing indicated is to prevent buckling of individual truss web and/or chord members only. Additional temporary and permanent bracing is always required for stability and to prevent collapse with possible personal injury and property damage. For general guidance regarding the fabrication, storage, delivery, erection and bracing of trusses and truss systems, see **ANSI/TPI1 Quality Criteria, DSB-89 and BCSI Building Component Safety Information** available from Truss Plate Institute, 2670 Crain Highway, Suite 203 Waldorf, MD 20601

ENGINEERING BY TRENCO A MiTek Affiliate
818 Soundside Road
Edenton, NC 27932

Job	Truss	Truss Type	Qty	Ply	KB Home 149.2115.A
149_2115_A	BE	GABLE	1	1	I48384476 Job Reference (optional)

84 Components (Dunn), Dunn, NC - 28334, 8.520 s Aug 27 2021 MiTek Industries, Inc. Fri Oct 15 15:11:33 2021 Page 1
ID:cmNXBBvy9jl3gOX4hJTcOZyhfop-fcMwbK5G5h_ZeeQBWwCnamVd5cC?VKuKkpl8z8yT7m8

0-10-8 | 8-0-0 | 16-0-0 | 16-10-8
0-10-8 | 8-0-0 | 8-0-0 | 0-10-8

Scale = 1:38.1

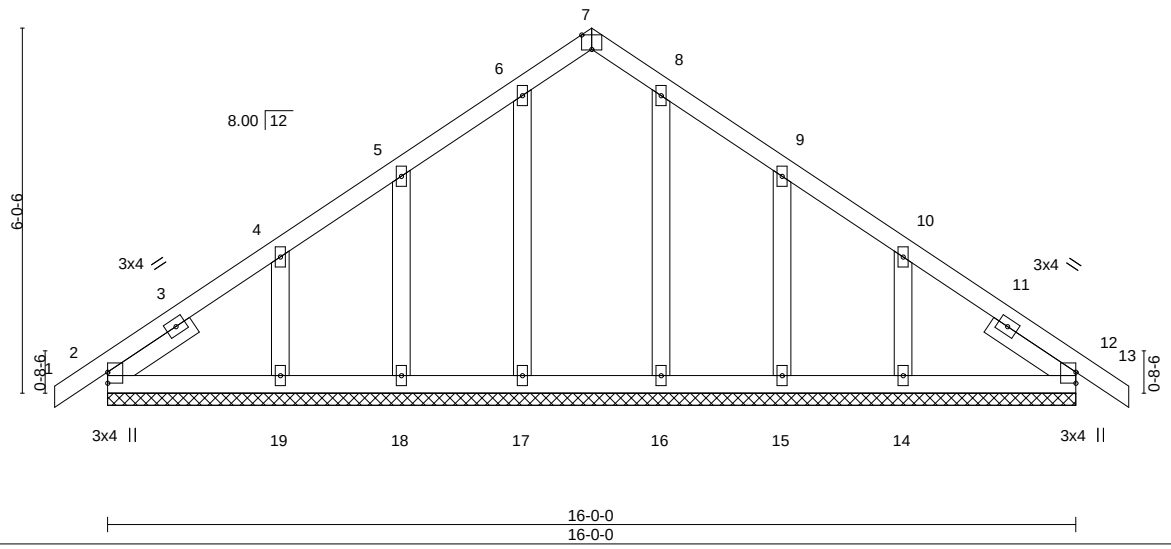

Plate Offsets (X,Y)-- [7:0-2-0,Edge]

LOADING (psf)		SPACING-	2-0-0	CSI.		DEFL.	in	(loc)	l/defl	L/d	PLATES	GRIP
TCLL	20.0	Plate Grip DOL	1.15	TC	0.11	Vert(LL)	0.00	12	n/r	120	MT20	197/144
TCDL	10.0	Lumber DOL	1.15	BC	0.06	Vert(CT)	0.00	13	n/r	120		
BCLL	0.0 *	Rep Stress Incr	YES	WB	0.05	Horz(CT)	0.00	12	n/a	n/a		
BCDL	10.0	Code IRC2015/TPI2014		Matrix-S							Weight: 91 lb	FT = 20%

LUMBER-
TOP CHORD 2x4 SP No.2 or 2x4 SPF No.2
BOT CHORD 2x4 SP No.2 or 2x4 SPF No.2
OTHERS 2x4 SP No.3
SLIDER Left 2x4 SP No.3 1-7-15, Right 2x4 SP No.3 1-7-15

BRACING-
TOP CHORD Structural wood sheathing directly applied or 6-0-0 oc purlins.
BOT CHORD Rigid ceiling directly applied or 10-0-0 oc bracing.

REACTIONS. All bearings 16-0-0.
(lb) - Max Horz 2=-146(LC 10)
Max Uplift All uplift 100 lb or less at joint(s) 17, 18, 15 except 19=-115(LC 12), 14=-111(LC 13)
Max Grav All reactions 250 lb or less at joint(s) 2, 12, 17, 18, 19, 16, 15, 14

FORCES. (lb) - Max. Comp./Max. Ten. - All forces 250 (lb) or less except when shown.

NOTES-
1) Unbalanced roof live loads have been considered for this design.
2) Wind: ASCE 7-10; Vult=130mph Vasd=103mph; TCDL=6.0psf; BCDL=6.0psf; h=25ft; Cat. II; Exp B; Enclosed; MWFRS (envelope) gable end zone and C-C Corner(3) -0-10-8 to 2-1-8, Exterior(2) 2-1-8 to 8-0-0, Corner(3) 8-0-0 to 11-1-12, Exterior(2) 11-1-12 to 16-10-8 zone;C-C for members and forces & MWFRS for reactions shown; Lumber DOL=1.60 plate grip DOL=1.60
3) Truss designed for wind loads in the plane of the truss only. For studs exposed to wind (normal to the face), see Standard Industry Gable End Details as applicable, or consult qualified building designer as per ANSI/TPI 1.
4) All plates are 2x4 MT20 unless otherwise indicated.
5) Gable requires continuous bottom chord bearing.
6) Gable studs spaced at 2-0-0 oc.
7) This truss has been designed for a 10.0 psf bottom chord live load nonconcurrent with any other live loads.
8) * This truss has been designed for a live load of 20.0psf on the bottom chord in all areas where a rectangle 3-6-0 tall by 2-0-0 wide will fit between the bottom chord and any other members, with BCDL = 10.0psf.

October 18,2021

WARNING - Verify design parameters and READ NOTES ON THIS AND INCLUDED MITEK REFERENCE PAGE MII-7473 rev. 5/19/2020 BEFORE USE.
Design valid for use only with MiTek® connectors. This design is based only upon parameters shown, and is for an individual building component, not a truss system. Before use, the building designer must verify the applicability of design parameters and properly incorporate this design into the overall building design. Bracing indicated is to prevent buckling of individual truss web and/or chord members only. Additional temporary and permanent bracing is always required for stability and to prevent collapse with possible personal injury and property damage. For general guidance regarding the fabrication, storage, delivery, erection and bracing of trusses and truss systems, see **ANSI/TPI1 Quality Criteria, DSB-89 and BCSI Building Component Safety Information** available from Truss Plate Institute, 2670 Crain Highway, Suite 203 Waldorf, MD 20601

ENGINEERING BY TRENCO A MiTek Affiliate
818 Soundside Road
Edenton, NC 27932

Job	Truss	Truss Type	Qty	Ply	KB Home 149.2115.A
149_2115_A	BG	HOWE	1	2	I48384477 Job Reference (optional)

8.520 s Aug 27 2021 MiTek Industries, Inc. Fri Oct 15 15:18:04 2021 Page 1
ID:cmNXBBvy9jI3gOX4hJTcOZyhfop-yqmjUNGr0osadJyq5WTOSjBFkDWBcwFte8yLC_yT7g1

Scale = 1:37.7

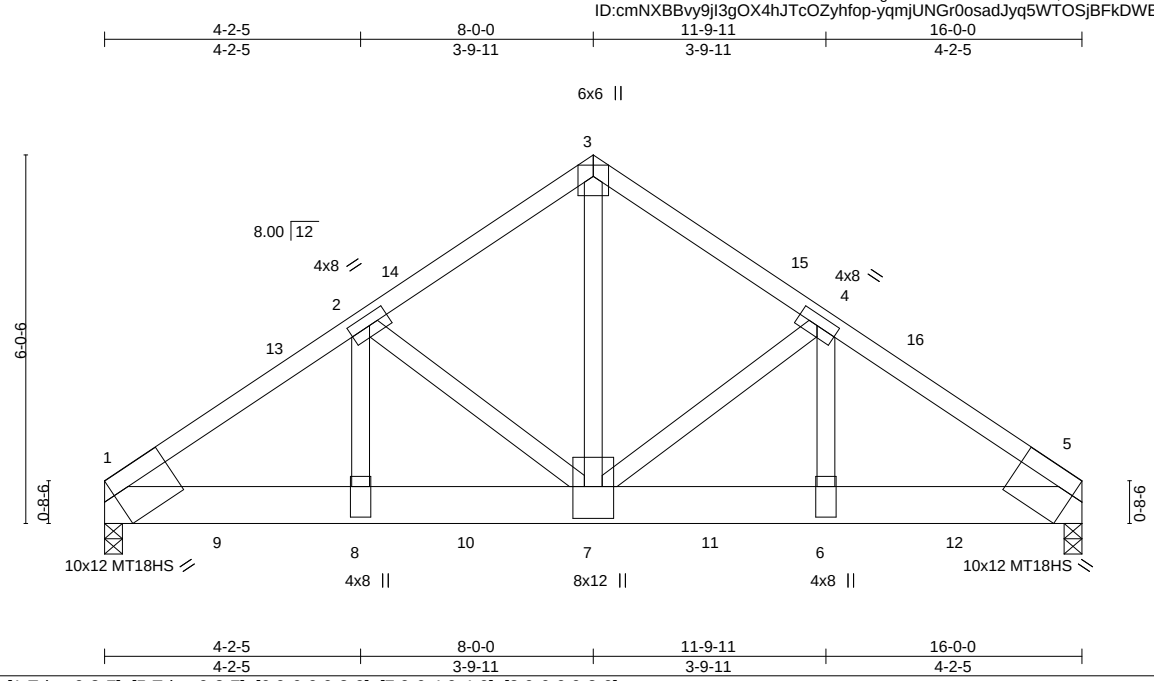

Plate Offsets (X,Y)-- [1:Edge,0-3-7], [5:Edge,0-3-7], [6:0-6-0,0-2-0], [7:0-6-4,0-4-0], [8:0-6-0,0-2-0]

LOADING (psf)		SPACING- 2-0-0		CSI.		DEFL.	in	(loc)	l/defl	L/d	PLATES	GRIP
TCLL	20.0	Plate Grip DOL	1.15	TC	0.85	Vert(LL)	-0.09	6-7	>999	240	MT20	197/144
TCDL	10.0	Lumber DOL	1.15	BC	0.52	Vert(CT)	-0.18	6-7	>999	180	MT18HS	197/144
BCLL	0.0 *	Rep Stress Incr	NO	WB	0.98	Horz(CT)	0.04	5	n/a	n/a		
BCDL	10.0	Code IRC2015/TPI2014		Matrix-S							Weight: 214 lb	FT = 20%

LUMBER-
TOP CHORD 2x4 SP No.2 or 2x4 SPF No.2
BOT CHORD 2x8 SP DSS
WEBS 2x4 SP No.3 *Except*
3-7: 2x4 SP No.2 or 2x4 SPF No.2

BRACING-
TOP CHORD Structural wood sheathing directly applied or 2-10-15 oc purlins.
BOT CHORD Rigid ceiling directly applied or 10-0-0 oc bracing.

REACTIONS. (lb/size) 1=7523/0-3-8 (req. 0-5-14), 5=7461/0-3-8 (req. 0-5-14)
Max Horz 1=-137(LC 31)
Max Uplift 1=-812(LC 12), 5=-805(LC 13)

SUPPLEMENTARY BEARING PLATES, SPECIAL ANCHORAGE, OR OTHER MEANS TO ALLOW FOR THE MINIMUM REQUIRED SUPPORT WIDTH (SUCH AS COLUMN CAPS, BEARING BLOCKS, ETC.) ARE THE RESPONSIBILITY OF THE TRUSS MANUFACTURER OR THE BUILDING DESIGNER.

FORCES. (lb) - Max. Comp./Max. Ten. - All forces 250 (lb) or less except when shown.
TOP CHORD 1-13=-10476/1143, 2-13=-10383/1159, 2-14=-7473/863, 3-14=-7433/886, 3-15=-7433/886, 4-15=-7473/863, 4-16=-10385/1159, 5-16=-10478/1143
BOT CHORD 1-9=-934/8354, 8-9=-934/8354, 8-10=-934/8354, 7-10=-934/8354, 7-11=-867/8356, 6-11=-867/8356, 6-12=-867/8356, 5-12=-867/8356
WEBS 2-8=-342/3612, 3-7=-891/7977, 4-6=-344/3615, 2-7=-2784/404, 4-7=-2786/406

NOTES-
1) 2-ply truss to be connected together with 10d (0.131"x3") nails as follows:
Top chords connected as follows: 2x4 - 1 row at 0-9-0 oc.
Bottom chords connected as follows: 2x8 - 2 rows staggered at 0-5-0 oc.
Webs connected as follows: 2x4 - 1 row at 0-9-0 oc.
2) All loads are considered equally applied to all plies, except if noted as front (F) or back (B) face in the LOAD CASE(S) section. Ply to ply connections have been provided to distribute only loads noted as (F) or (B), unless otherwise indicated.
3) Unbalanced roof live loads have been considered for this design.
4) Wind: ASCE 7-10; Vult=130mph Vasd=103mph; TCDL=6.0psf; BCDL=6.0psf; h=25ft; Cat. II; Exp B; Enclosed; MWFRS (envelope) gable end zone and C-C Exterior(2) 0-1-12 to 3-1-12, Interior(1) 3-1-12 to 8-0-0, Exterior(2) 8-0-0 to 11-0-0, Interior(1) 11-0-0 to 15-10-4 zone;C-C for members and forces & MWFRS for reactions shown; Lumber DOL=1.60 plate grip DOL=1.60
5) All plates are MT20 plates unless otherwise indicated.
6) This truss has been designed for a 10.0 psf bottom chord live load nonconcurrent with any other live loads.
7) * This truss has been designed for a live load of 20.0psf on the bottom chord in all areas where a rectangle 3-6-0 tall by 2-0-0 wide will fit between the bottom chord and any other members.
8) WARNING: Required bearing size at joint(s) 1, 5 greater than input bearing size.
9) Provide mechanical connection (by others) of truss to bearing plate capable of withstanding 812 lb uplift at joint 1 and 805 lb uplift at joint 5.
10) This truss is designed in accordance with the 2015 International Residential Code sections R502.11.1 and R802.10.2 and referenced standard ANSI/TPI 1.
11) Hanger(s) or other connection device(s) shall be provided sufficient to support concentrated load(s) 1961 lb down and 220 lb up at 1-11-4, 1961 lb down and 220 lb up at 3-11-4, 1961 lb down and 220 lb up at 5-11-4, 1961 lb down and 220 lb up at 7-11-4, 1961 lb down and 220 lb up at 9-11-4, and 1961 lb down and 220 lb up at 11-11-4, and 1961 lb down and 220 lb up at 13-11-4 on bottom chord. The design/selection of such connection device(s) is the responsibility of others.

October 18,2021

LOAD CASE(S) Standard
Continued on page 2

WARNING - Verify design parameters and READ NOTES ON THIS AND INCLUDED MITEK REFERENCE PAGE MII-7473 rev. 5/19/2020 BEFORE USE.
Design valid for use only with MiTek® connectors. This design is based only upon parameters shown, and is for an individual building component, not a truss system. Before use, the building designer must verify the applicability of design parameters and properly incorporate this design into the overall building design. Bracing indicated is to prevent buckling of individual truss web and/or chord members only. Additional temporary and permanent bracing is always required for stability and to prevent collapse with possible personal injury and property damage. For general guidance regarding the fabrication, storage, delivery, erection and bracing of trusses and truss systems, see **ANSI/TPI1 Quality Criteria, DSB-89 and BCSI Building Component Safety Information** available from Truss Plate Institute, 2670 Crain Highway, Suite 203 Waldorf, MD 20601

ENGINEERING BY
TRENCO
A MiTek Affiliate
818 Soundside Road
Edenton, NC 27932

LOAD CASE(S) Standard

1) Dead + Roof Live (balanced): Lumber Increase=1.15, Plate Increase=1.15
   Uniform Loads (plf)
   Vert: 1-5=-20, 1-3=-60, 3-5=-60
   Concentrated Loads (lb)
   Vert: 8=-1961(B) 7=-1961(B) 6=-1961(B) 9=-1961(B) 10=-1961(B) 11=-1961(B) 12=-1961(B)

WARNING - Verify design parameters and READ NOTES ON THIS AND INCLUDED MITEK REFERENCE PAGE MII-7473 rev. 5/19/2020 BEFORE USE.
Design valid for use only with MiTek® connectors. This design is based only upon parameters shown, and is for an individual building component, not a truss system. Before use, the building designer must verify the applicability of design parameters and properly incorporate this design into the overall building design. Bracing indicated is to prevent buckling of individual truss web and/or chord members only. Additional temporary and permanent bracing is always required for stability and to prevent collapse with possible personal injury and property damage. For general guidance regarding the fabrication, storage, delivery, erection and bracing of trusses and truss systems, see **ANSI/TPI1 Quality Criteria, DSB-89 and BCSI Building Component Safety Information** available from Truss Plate Institute, 2670 Crain Highway, Suite 203 Waldorf, MD 20601

ENGINEERING BY TRENCO A MiTek Affiliate
818 Soundside Road
Edenton, NC 27932

Job	Truss	Truss Type	Qty	Ply	KB Home 149.2115.A
149_2115_A	PB1	Piggyback	2	1	I48384478 Job Reference (optional)

84 Components (Dunn), Dunn, NC - 28334, 8.520 s Aug 27 2021 MiTek Industries, Inc. Fri Oct 15 15:11:35 2021 Page 1
ID:cmNXBBvy9jI3gOX4hJTcOZyhfop-b?Th006XdIEHtxaadLFFfBaxzPsTzEfcB7EF21yT7m6

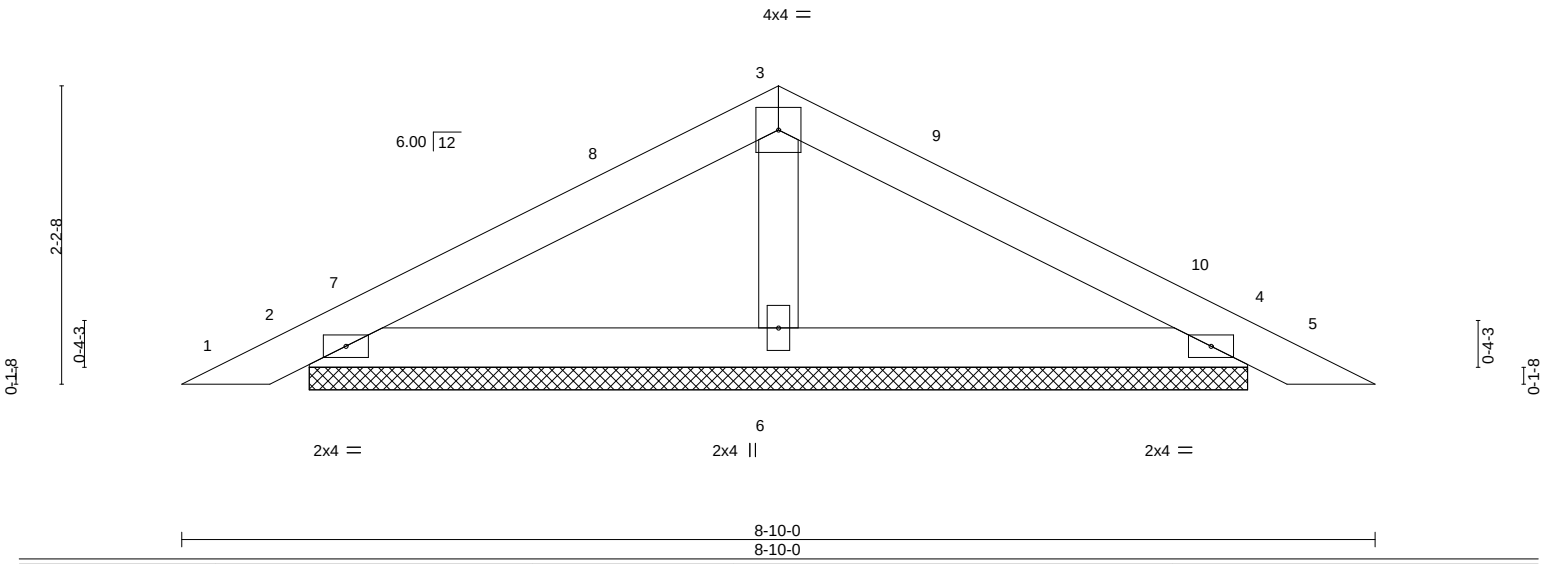

LOADING (psf)		SPACING- 2-0-0		CSI.		DEFL. in (loc) l/defl L/d		PLATES GRIP
TCLL	20.0	Plate Grip DOL	1.15	TC	0.21	Vert(LL) 0.01 5 n/r 120		MT20 197/144
TCDL	10.0	Lumber DOL	1.15	BC	0.12	Vert(CT) 0.01 5 n/r 120		
BCLL	0.0 *	Rep Stress Incr	YES	WB	0.04	Horz(CT) 0.00 4 n/a n/a		
BCDL	10.0	Code IRC2015/TPI2014		Matrix-P				Weight: 27 lb FT = 20%

LUMBER-
TOP CHORD 2x4 SP No.2 or 2x4 SPF No.2
BOT CHORD 2x4 SP No.2 or 2x4 SPF No.2
OTHERS 2x4 SP No.3

BRACING-
TOP CHORD Structural wood sheathing directly applied or 6-0-0 oc purlins.
BOT CHORD Rigid ceiling directly applied or 10-0-0 oc bracing.

REACTIONS. (size) 2=6-11-6, 4=6-11-6, 6=6-11-6
Max Horz 2=34(LC 12)
Max Uplift 2=-48(LC 12), 4=-54(LC 13)
Max Grav 2=181(LC 1), 4=181(LC 1), 6=268(LC 1)

FORCES. (lb) - Max. Comp./Max. Ten. - All forces 250 (lb) or less except when shown.

NOTES-
1) Unbalanced roof live loads have been considered for this design.
2) Wind: ASCE 7-10; Vult=130mph Vasd=103mph; TCDL=6.0psf; BCDL=6.0psf; h=25ft; Cat. II; Exp B; Enclosed; MWFRS (envelope) gable end zone and C-C Exterior(2) 0-3-15 to 3-3-15, Interior(1) 3-3-15 to 4-5-0, Exterior(2) 4-5-0 to 7-5-0, Interior(1) 7-5-0 to 8-6-1 zone;C-C for members and forces & MWFRS for reactions shown; Lumber DOL=1.60 plate grip DOL=1.60
3) Gable requires continuous bottom chord bearing.
4) This truss has been designed for a 10.0 psf bottom chord live load nonconcurrent with any other live loads.
5) * This truss has been designed for a live load of 20.0psf on the bottom chord in all areas where a rectangle 3-6-0 tall by 2-0-0 wide will fit between the bottom chord and any other members.
6) N/A

7) See Standard Industry Piggyback Truss Connection Detail for Connection to base truss as applicable, or consult qualified building designer.

October 18,2021

WARNING - Verify design parameters and READ NOTES ON THIS AND INCLUDED MITEK REFERENCE PAGE MII-7473 rev. 5/19/2020 BEFORE USE.
Design valid for use only with MiTek® connectors. This design is based only upon parameters shown, and is for an individual building component, not a truss system. Before use, the building designer must verify the applicability of design parameters and properly incorporate this design into the overall building design. Bracing indicated is to prevent buckling of individual truss web and/or chord members only. Additional temporary and permanent bracing is always required for stability and to prevent collapse with possible personal injury and property damage. For general guidance regarding the fabrication, storage, delivery, erection and bracing of trusses and truss systems, see **ANSI/TPI1 Quality Criteria, DSB-89 and BCSI Building Component Safety Information** available from Truss Plate Institute, 2670 Crain Highway, Suite 203 Waldorf, MD 20601

ENGINEERING BY TRENCO A MiTek Affiliate
818 Soundside Road
Edenton, NC 27932

Job	Truss	Truss Type	Qty	Ply	KB Home 149.2115.A
149_2115_A	PB2	Piggyback	24	1	I48384479 Job Reference (optional)

84 Components (Dunn), Dunn, NC - 28334, 8.520 s Aug 27 2021 MiTek Industries, Inc. Fri Oct 15 15:11:36 2021 Page 1
ID:cmNXBBvy9jI3gOX4hJTcOZyhfop-3B13DL79OcM8V59mB2mUBO76hp3TigUmQnzoaTyT7m5

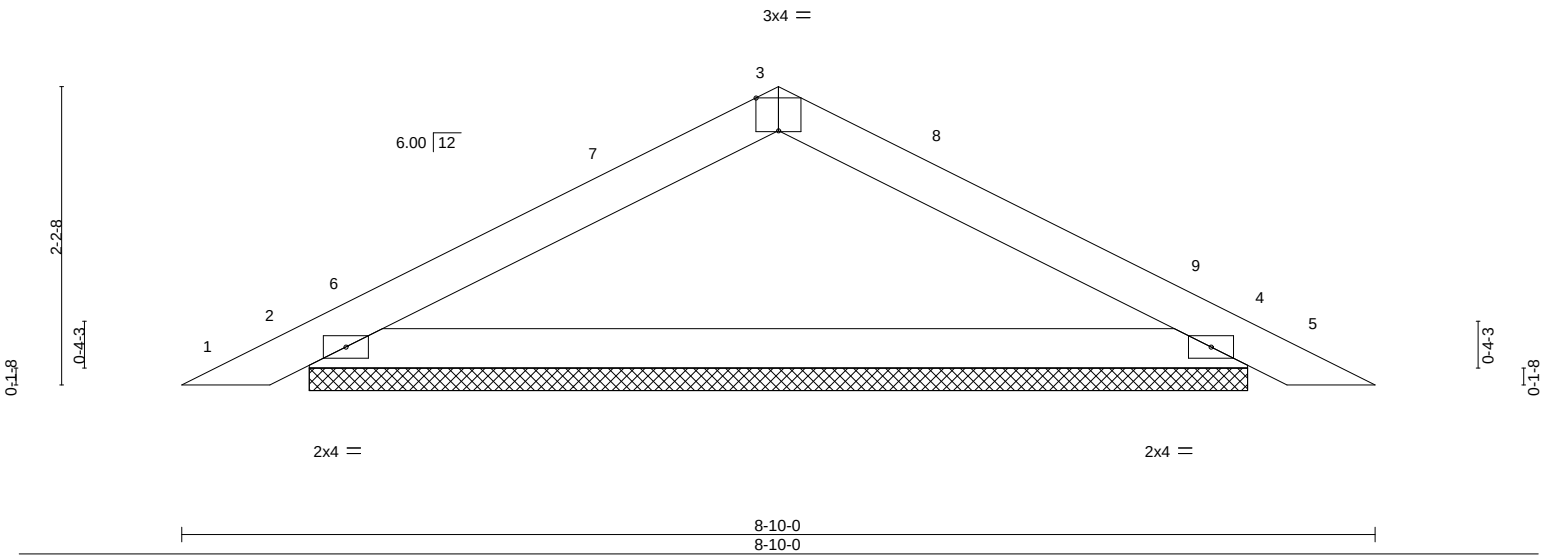

Plate Offsets (X,Y)-- [3:0-2-0,Edge]

LOADING (psf)		SPACING- 2-0-0		CSI.		DEFL. in (loc) l/defl L/d					PLATES	GRIP
TCLL	20.0	Plate Grip DOL	1.15	TC	0.21	Vert(LL)	0.01	5	n/r	120	MT20	197/144
TCDL	10.0	Lumber DOL	1.15	BC	0.65	Vert(CT)	0.01	5	n/r	120		
BCLL	0.0 *	Rep Stress Incr	YES	WB	0.00	Horz(CT)	0.00	4	n/a	n/a		
BCDL	10.0	Code IRC2015/TPI2014		Matrix-P							Weight: 25 lb	FT = 20%

LUMBER-
TOP CHORD 2x4 SP No.2 or 2x4 SPF No.2
BOT CHORD 2x4 SP No.2 or 2x4 SPF No.2

BRACING-
TOP CHORD Structural wood sheathing directly applied or 6-0-0 oc purlins.
BOT CHORD Rigid ceiling directly applied or 10-0-0 oc bracing.

REACTIONS. (size) 2=6-11-6, 4=6-11-6
Max Horz 2=34(LC 12)
Max Uplift 2=-46(LC 12), 4=-46(LC 13)
Max Grav 2=315(LC 1), 4=315(LC 1)

FORCES. (lb) - Max. Comp./Max. Ten. - All forces 250 (lb) or less except when shown.
TOP CHORD 2-3=-261/150, 3-4=-261/150

NOTES-
1) Unbalanced roof live loads have been considered for this design.
2) Wind: ASCE 7-10; Vult=130mph Vasd=103mph; TCDL=6.0psf; BCDL=6.0psf; h=25ft; Cat. II; Exp B; Enclosed; MWFRS (envelope) gable end zone and C-C Exterior(2) 0-3-15 to 3-3-15, Interior(1) 3-3-15 to 4-5-0, Exterior(2) 4-5-0 to 7-5-0, Interior(1) 7-5-0 to 8-6-1 zone;C-C for members and forces & MWFRS for reactions shown; Lumber DOL=1.60 plate grip DOL=1.60
3) Gable requires continuous bottom chord bearing.
4) This truss has been designed for a 10.0 psf bottom chord live load nonconcurrent with any other live loads.
5) * This truss has been designed for a live load of 20.0psf on the bottom chord in all areas where a rectangle 3-6-0 tall by 2-0-0 wide will fit between the bottom chord and any other members.
6) N/A

7) See Standard Industry Piggyback Truss Connection Detail for Connection to base truss as applicable, or consult qualified building designer.

October 18,2021

WARNING - Verify design parameters and READ NOTES ON THIS AND INCLUDED MITEK REFERENCE PAGE MII-7473 rev. 5/19/2020 BEFORE USE.
Design valid for use only with MiTek® connectors. This design is based only upon parameters shown, and is for an individual building component, not a truss system. Before use, the building designer must verify the applicability of design parameters and properly incorporate this design into the overall building design. Bracing indicated is to prevent buckling of individual truss web and/or chord members only. Additional temporary and permanent bracing is always required for stability and to prevent collapse with possible personal injury and property damage. For general guidance regarding the fabrication, storage, delivery, erection and bracing of trusses and truss systems, see **ANSI/TPI1 Quality Criteria, DSB-89 and BCSI Building Component Safety Information** available from Truss Plate Institute, 2670 Crain Highway, Suite 203 Waldorf, MD 20601

ENGINEERING BY TRENCO A MiTek Affiliate
818 Soundside Road
Edenton, NC 27932

Job	Truss	Truss Type	Qty	Ply	KB Home 149.2115.A
149_2115_A	V1	Valley	1	1	I48384480 Job Reference (optional)

84 Components (Dunn), Dunn, NC - 28334, 8.520 s Aug 27 2021 MiTek Industries, Inc. Fri Oct 15 15:11:36 2021 Page 1
ID:cmNXBBvy9jI3gOX4hJTcOZyhfop-3B13DL79OcM8V59mB2mUBO7z3p8Rif_mQnzoaTyT7m5

6-2-10 | 12-5-4
6-2-10 | 6-2-10

Scale = 1:26.5

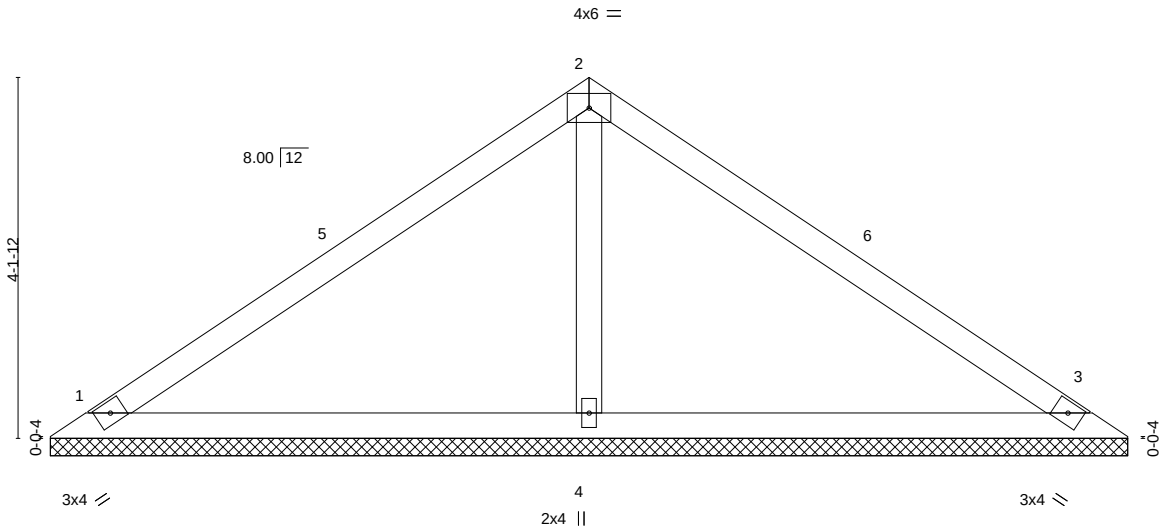

LOADING (psf)			SPACING- 2-0-0		CSI.		DEFL.	in	(loc)	l/defl	L/d	PLATES	GRIP
TCLL	20.0		Plate Grip DOL	1.15	TC	0.83	Vert(LL)	n/a	-	n/a	999	MT20	197/144
TCDL	10.0		Lumber DOL	1.15	BC	0.33	Vert(CT)	n/a	-	n/a	999		
BCLL	0.0	*	Rep Stress Incr	YES	WB	0.10	Horz(CT)	0.00	3	n/a	n/a		
BCDL	10.0		Code IRC2015/TPI2014		Matrix-S							Weight: 44 lb	FT = 20%

LUMBER-
TOP CHORD 2x4 SP No.3
BOT CHORD 2x4 SP No.2 or 2x4 SPF No.2
OTHERS 2x4 SP No.3

BRACING-
TOP CHORD Structural wood sheathing directly applied or 6-0-0 oc purlins.
BOT CHORD Rigid ceiling directly applied or 10-0-0 oc bracing.

REACTIONS. (size) 1=12-4-8, 3=12-4-8, 4=12-4-8
Max Horz 1=95(LC 11)
Max Uplift 1=-41(LC 12), 3=-53(LC 13), 4=-16(LC 12)
Max Grav 1=224(LC 1), 3=224(LC 1), 4=469(LC 1)

FORCES. (lb) - Max. Comp./Max. Ten. - All forces 250 (lb) or less except when shown.
WEBS 2-4=-298/91

NOTES-
1) Unbalanced roof live loads have been considered for this design.
2) Wind: ASCE 7-10; Vult=130mph Vasd=103mph; TCDL=6.0psf; BCDL=6.0psf; h=25ft; Cat. II; Exp B; Enclosed; MWFRS (envelope) gable end zone and C-C Exterior(2) 0-5-12 to 3-5-12, Interior(1) 3-5-12 to 6-2-10, Exterior(2) 6-2-10 to 9-2-10, Interior(1) 9-2-10 to 11-11-8 zone;C-C for members and forces & MWFRS for reactions shown; Lumber DOL=1.60 plate grip DOL=1.60
3) Gable requires continuous bottom chord bearing.
4) This truss has been designed for a 10.0 psf bottom chord live load nonconcurrent with any other live loads.
5) * This truss has been designed for a live load of 20.0psf on the bottom chord in all areas where a rectangle 3-6-0 tall by 2-0-0 wide will fit between the bottom chord and any other members.

October 18,2021

WARNING - Verify design parameters and READ NOTES ON THIS AND INCLUDED MITEK REFERENCE PAGE MII-7473 rev. 5/19/2020 BEFORE USE.
Design valid for use only with MiTek® connectors. This design is based only upon parameters shown, and is for an individual building component, not a truss system. Before use, the building designer must verify the applicability of design parameters and properly incorporate this design into the overall building design. Bracing indicated is to prevent buckling of individual truss web and/or chord members only. Additional temporary and permanent bracing is always required for stability and to prevent collapse with possible personal injury and property damage. For general guidance regarding the fabrication, storage, delivery, erection and bracing of trusses and truss systems, see **ANSI/TPI1 Quality Criteria, DSB-89 and BCSI Building Component Safety Information** available from Truss Plate Institute, 2670 Crain Highway, Suite 203 Waldorf, MD 20601

ENGINEERING BY TRENCO A MiTek Affiliate
818 Soundside Road
Edenton, NC 27932

Job	Truss	Truss Type	Qty	Ply	KB Home 149.2115.A
149_2115_A	V2	Valley	1	1	I48384481 Job Reference (optional)

84 Components (Dunn), Dunn, NC - 28334, 8.520 s Aug 27 2021 MiTek Industries, Inc. Fri Oct 15 15:11:37 2021 Page 1
ID:cmNXBBvy9jI3gOX4hJTcOZyhfop-XNbRQh8n9vU?6FjyImHjkcgD7DV4R7wveRjM6vyT7m4

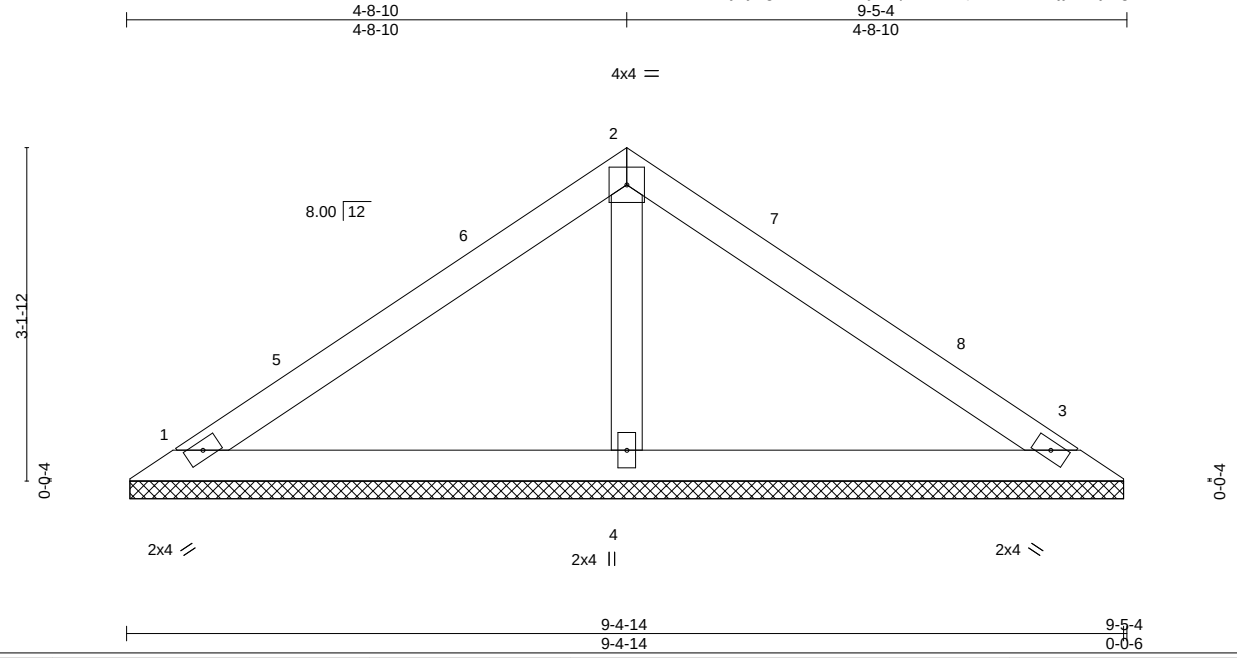

LOADING (psf)			SPACING- 2-0-0		CSI.		DEFL.	in	(loc)	l/defl	L/d	PLATES	GRIP
TCLL	20.0		Plate Grip DOL	1.15	TC	0.42	Vert(LL)	n/a	-	n/a	999	MT20	244/190
TCDL	10.0		Lumber DOL	1.15	BC	0.30	Vert(CT)	n/a	-	n/a	999		
BCLL	0.0	*	Rep Stress Incr	YES	WB	0.05	Horz(CT)	0.00	3	n/a	n/a		
BCDL	10.0		Code IRC2015/TPI2014		Matrix-S							Weight: 33 lb	FT = 20%

LUMBER-
TOP CHORD 2x4 SP No.3
BOT CHORD 2x4 SP No.3
OTHERS 2x4 SP No.3

BRACING-
TOP CHORD Structural wood sheathing directly applied or 6-0-0 oc purlins.
BOT CHORD Rigid ceiling directly applied or 10-0-0 oc bracing.

REACTIONS. (size) 1=9-4-8, 3=9-4-8, 4=9-4-8
Max Horz 1=-70(LC 8)
Max Uplift 1=-31(LC 12), 3=-40(LC 13), 4=-12(LC 12)
Max Grav 1=165(LC 1), 3=165(LC 1), 4=347(LC 1)

FORCES. (lb) - Max. Comp./Max. Ten. - All forces 250 (lb) or less except when shown.

NOTES-
1) Unbalanced roof live loads have been considered for this design.
2) Wind: ASCE 7-10; Vult=130mph Vasd=103mph; TCDL=6.0psf; BCDL=6.0psf; h=25ft; Cat. II; Exp B; Enclosed; MWFRS (envelope) gable end zone and C-C Exterior(2) 0-5-12 to 3-5-12, Interior(1) 3-5-12 to 4-8-10, Exterior(2) 4-8-10 to 7-8-10, Interior(1) 7-8-10 to 8-11-8 zone;C-C for members and forces & MWFRS for reactions shown; Lumber DOL=1.60 plate grip DOL=1.60
3) Gable requires continuous bottom chord bearing.
4) This truss has been designed for a 10.0 psf bottom chord live load nonconcurrent with any other live loads.
5) * This truss has been designed for a live load of 20.0psf on the bottom chord in all areas where a rectangle 3-6-0 tall by 2-0-0 wide will fit between the bottom chord and any other members.

October 18,2021

WARNING - Verify design parameters and READ NOTES ON THIS AND INCLUDED MITEK REFERENCE PAGE MII-7473 rev. 5/19/2020 BEFORE USE.
Design valid for use only with MiTek® connectors. This design is based only upon parameters shown, and is for an individual building component, not a truss system. Before use, the building designer must verify the applicability of design parameters and properly incorporate this design into the overall building design. Bracing indicated is to prevent buckling of individual truss web and/or chord members only. Additional temporary and permanent bracing is always required for stability and to prevent collapse with possible personal injury and property damage. For general guidance regarding the fabrication, storage, delivery, erection and bracing of trusses and truss systems, see **ANSI/TPI1 Quality Criteria, DSB-89 and BCSI Building Component Safety Information** available from Truss Plate Institute, 2670 Crain Highway, Suite 203 Waldorf, MD 20601

ENGINEERING BY TRENCO A MiTek Affiliate
818 Soundside Road
Edenton, NC 27932

Job	Truss	Truss Type	Qty	Ply	KB Home 149.2115.A
149_2115_A	V3	Valley	1	1	I48384482 Job Reference (optional)

84 Components (Dunn), Dunn, NC - 28334, 8.520 s Aug 27 2021 MiTek Industries, Inc. Fri Oct 15 15:11:38 2021 Page 1
ID:cmNXBBvy9jI3gOX4hJTcOZyhfop-0a9pe19PwDcskPI9JToyHpCRvdt3AaY3t5SvfMyT7m3

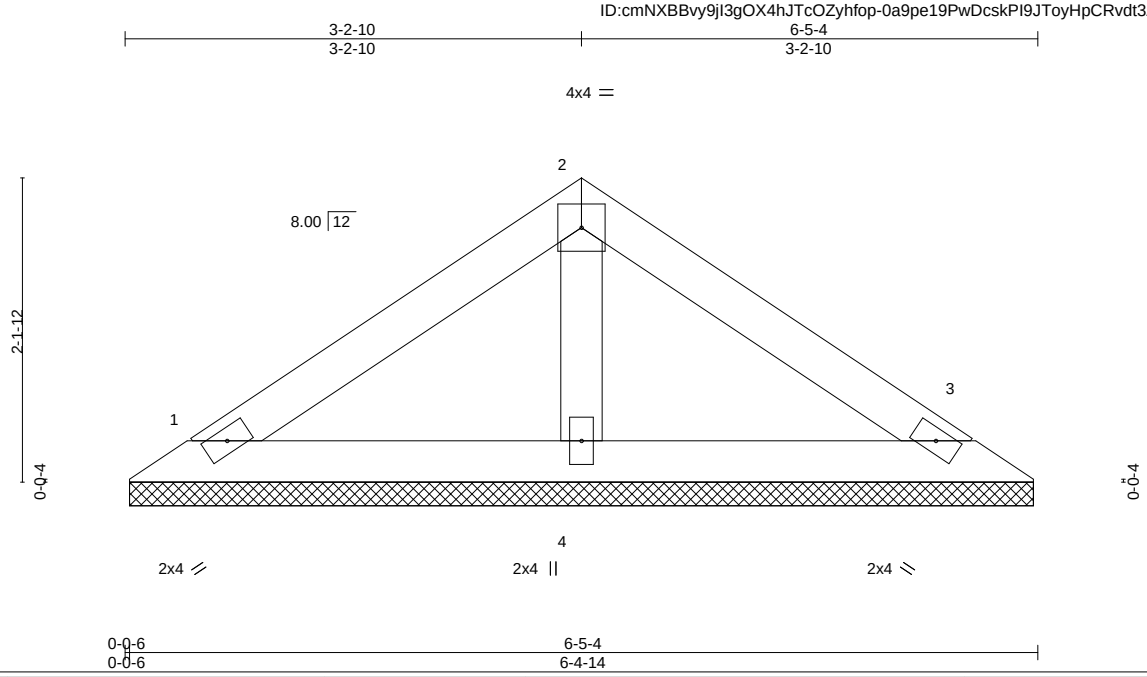

LOADING (psf)		SPACING- 2-0-0		CSI.		DEFL. in (loc) l/defl L/d		PLATES	GRIP
TCLL	20.0	Plate Grip DOL	1.15	TC	0.23	Vert(LL) n/a - n/a 999		MT20	244/190
TCDL	10.0	Lumber DOL	1.15	BC	0.13	Vert(CT) n/a - n/a 999			
BCLL	0.0 *	Rep Stress Incr	YES	WB	0.03	Horz(CT) 0.00 3 n/a n/a			
BCDL	10.0	Code IRC2015/TPI2014		Matrix-P				Weight: 22 lb	FT = 20%

LUMBER-
TOP CHORD 2x4 SP No.3
BOT CHORD 2x4 SP No.3
OTHERS 2x4 SP No.3

BRACING-
TOP CHORD Structural wood sheathing directly applied or 6-0-0 oc purlins.
BOT CHORD Rigid ceiling directly applied or 10-0-0 oc bracing.

REACTIONS. (size) 1=6-4-8, 3=6-4-8, 4=6-4-8
Max Horz 1=-45(LC 8)
Max Uplift 1=-26(LC 12), 3=-32(LC 13)
Max Grav 1=117(LC 1), 3=117(LC 1), 4=203(LC 1)

FORCES. (lb) - Max. Comp./Max. Ten. - All forces 250 (lb) or less except when shown.

NOTES-
1) Unbalanced roof live loads have been considered for this design.
2) Wind: ASCE 7-10; Vult=130mph Vasd=103mph; TCDL=6.0psf; BCDL=6.0psf; h=25ft; Cat. II; Exp B; Enclosed; MWFRS (envelope) gable end zone and C-C Exterior(2) zone;C-C for members and forces & MWFRS for reactions shown; Lumber DOL=1.60 plate grip DOL=1.60
3) Gable requires continuous bottom chord bearing.
4) This truss has been designed for a 10.0 psf bottom chord live load nonconcurrent with any other live loads.
5) * This truss has been designed for a live load of 20.0psf on the bottom chord in all areas where a rectangle 3-6-0 tall by 2-0-0 wide will fit between the bottom chord and any other members.

October 18,2021

WARNING - Verify design parameters and READ NOTES ON THIS AND INCLUDED MITEK REFERENCE PAGE MII-7473 rev. 5/19/2020 BEFORE USE.
Design valid for use only with MiTek® connectors. This design is based only upon parameters shown, and is for an individual building component, not a truss system. Before use, the building designer must verify the applicability of design parameters and properly incorporate this design into the overall building design. Bracing indicated is to prevent buckling of individual truss web and/or chord members only. Additional temporary and permanent bracing is always required for stability and to prevent collapse with possible personal injury and property damage. For general guidance regarding the fabrication, storage, delivery, erection and bracing of trusses and truss systems, see **ANSI/TPI1 Quality Criteria, DSB-89 and BCSI Building Component Safety Information** available from Truss Plate Institute, 2670 Crain Highway, Suite 203 Waldorf, MD 20601

ENGINEERING BY TRENCO A MiTek Affiliate
818 Soundside Road
Edenton, NC 27932

Job	Truss	Truss Type	Qty	Ply	KB Home 149.2115.A
149_2115_A	V4	Valley	1	1	I48384483 Job Reference (optional)

84 Components (Dunn), Dunn, NC - 28334, 8.520 s Aug 27 2021 MiTek Industries, Inc. Fri Oct 15 15:11:39 2021 Page 1
ID:cmNXBBvy9jl3gOX4hJTcOZyhfop-UmjBrN91hXkjMZtLsBJBp1lfb1EPv1DC6kCTBoyT7m2

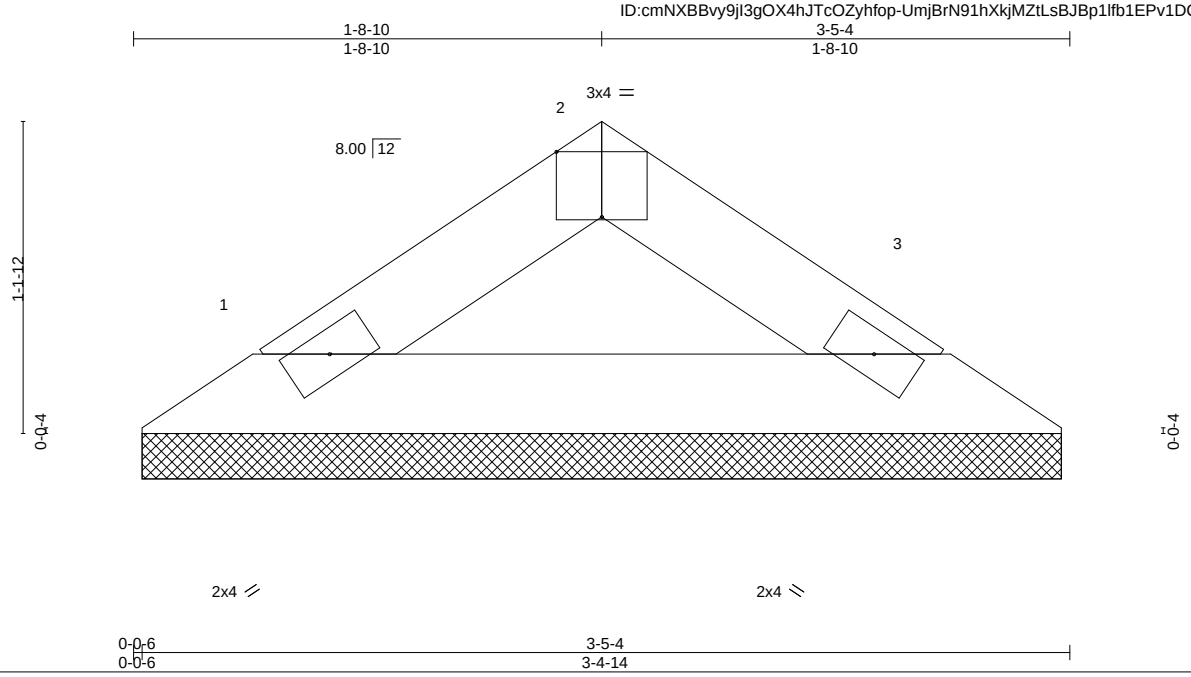

Plate Offsets (X,Y)-- [2:0-2-0,Edge]

LOADING (psf)		SPACING-	2-0-0	CSI.		DEFL.	in	(loc)	l/defl	L/d	PLATES	GRIP
TCLL	20.0	Plate Grip DOL	1.15	TC	0.04	Vert(LL)	n/a	-	n/a	999	MT20	244/190
TCDL	10.0	Lumber DOL	1.15	BC	0.12	Vert(CT)	n/a	-	n/a	999		
BCLL	0.0 *	Rep Stress Incr	YES	WB	0.00	Horz(CT)	0.00	3	n/a	n/a		
BCDL	10.0	Code IRC2015/TPI2014		Matrix-P							Weight: 10 lb	FT = 20%

LUMBER-
TOP CHORD 2x4 SP No.3
BOT CHORD 2x4 SP No.3

BRACING-
TOP CHORD Structural wood sheathing directly applied or 3-5-4 oc purlins.
BOT CHORD Rigid ceiling directly applied or 10-0-0 oc bracing.

REACTIONS. (size) 1=3-4-8, 3=3-4-8
Max Horz 1=-20(LC 8)
Max Uplift 1=-11(LC 12), 3=-11(LC 13)
Max Grav 1=99(LC 1), 3=99(LC 1)

FORCES. (lb) - Max. Comp./Max. Ten. - All forces 250 (lb) or less except when shown.

NOTES-
1) Unbalanced roof live loads have been considered for this design.
2) Wind: ASCE 7-10; Vult=130mph Vasd=103mph; TCDL=6.0psf; BCDL=6.0psf; h=25ft; Cat. II; Exp B; Enclosed; MWFRS (envelope) gable end zone and C-C Exterior(2) zone;C-C for members and forces & MWFRS for reactions shown; Lumber DOL=1.60 plate grip DOL=1.60
3) Gable requires continuous bottom chord bearing.
4) This truss has been designed for a 10.0 psf bottom chord live load nonconcurrent with any other live loads.
5) * This truss has been designed for a live load of 20.0psf on the bottom chord in all areas where a rectangle 3-6-0 tall by 2-0-0 wide will fit between the bottom chord and any other members.

October 18,2021

WARNING - Verify design parameters and READ NOTES ON THIS AND INCLUDED MITEK REFERENCE PAGE MII-7473 rev. 5/19/2020 BEFORE USE.
Design valid for use only with MiTek® connectors. This design is based only upon parameters shown, and is for an individual building component, not a truss system. Before use, the building designer must verify the applicability of design parameters and properly incorporate this design into the overall building design. Bracing indicated is to prevent buckling of individual truss web and/or chord members only. Additional temporary and permanent bracing is always required for stability and to prevent collapse with possible personal injury and property damage. For general guidance regarding the fabrication, storage, delivery, erection and bracing of trusses and truss systems, see **ANSI/TPI1 Quality Criteria, DSB-89 and BCSI Building Component Safety Information** available from Truss Plate Institute, 2670 Crain Highway, Suite 203 Waldorf, MD 20601

ENGINEERING BY TRENCO A MiTek Affiliate
818 Soundside Road
Edenton, NC 27932

Symbols

PLATE LOCATION AND ORIENTATION

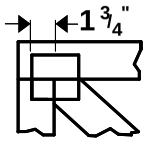

Center plate on joint unless x, y offsets are indicated. Dimensions are in ft-in-sixteenths. Apply plates to both sides of truss and fully embed teeth.

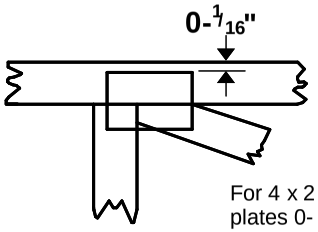

For 4 x 2 orientation, locate plates 0- 1/16" from outside edge of truss.

This symbol indicates the required direction of slots in connector plates.

*** Plate location details available in MiTek 20/20 software or upon request.**

PLATE SIZE

4 x 4

The first dimension is the plate width measured perpendicular to slots. Second dimension is the length parallel to slots.

LATERAL BRACING LOCATION

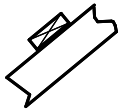

Indicated by symbol shown and/or by text in the bracing section of the output. Use T or I bracing if indicated.

BEARING

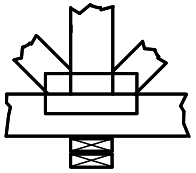

Indicates location where bearings (supports) occur. Icons vary but reaction section indicates joint number where bearings occur. Min size shown is for crushing only.

Industry Standards:

ANSI/TPI1: National Design Specification for Metal Plate Connected Wood Truss Construction.
DSB-89: Design Standard for Bracing.
BCSI: Building Component Safety Information, Guide to Good Practice for Handling, Installing & Bracing of Metal Plate Connected Wood Trusses.

Numbering System

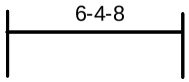

dimensions shown in ft-in-sixteenths
(Drawings not to scale)

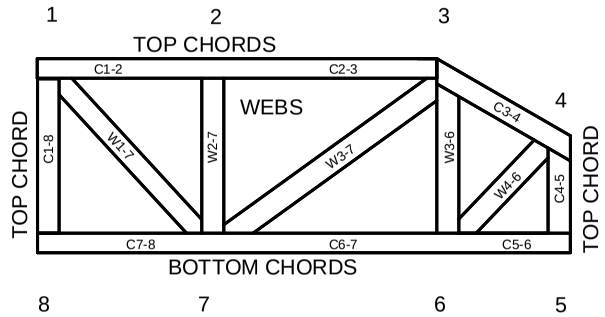

JOINTS ARE GENERALLY NUMBERED/LETTERED CLOCKWISE AROUND THE TRUSS STARTING AT THE JOINT FARTHEST TO THE LEFT.

CHORDS AND WEBS ARE IDENTIFIED BY END JOINT NUMBERS/LETTERS.

PRODUCT CODE APPROVALS

ICC-ES Reports:

ESR-1311, ESR-1352, ESR1988
ER-3907, ESR-2362, ESR-1397, ESR-3282

Trusses are designed for wind loads in the plane of the truss unless otherwise shown.

Lumber design values are in accordance with ANSI/TPI 1 section 6.3 These truss designs rely on lumber values established by others.

© 2012 MiTek® All Rights Reserved

MiTek

ENGINEERING BY TRENCO
A MiTek Affiliate

General Safety Notes

Failure to Follow Could Cause Property Damage or Personal Injury

1. Additional stability bracing for truss system, e.g. diagonal or X-bracing, is always required. See BCSI.
2. Truss bracing must be designed by an engineer. For wide truss spacing, individual lateral braces themselves may require bracing, or alternative Tor I bracing should be considered.
3. Never exceed the design loading shown and never stack materials on inadequately braced trusses.
4. Provide copies of this truss design to the building designer, erection supervisor, property owner and all other interested parties.
5. Cut members to bear tightly against each other.
6. Place plates on each face of truss at each joint and embed fully. Knots and wane at joint locations are regulated by ANSI/TPI 1.
7. Design assumes trusses will be suitably protected from the environment in accord with ANSI/TPI 1.
8. Unless otherwise noted, moisture content of lumber shall not exceed 19% at time of fabrication.
9. Unless expressly noted, this design is not applicable for use with fire retardant, preservative treated, or green lumber.
10. Camber is a non-structural consideration and is the responsibility of truss fabricator. General practice is to camber for dead load deflection.
11. Plate type, size, orientation and location dimensions indicated are minimum plating requirements.
12. Lumber used shall be of the species and size, and in all respects, equal to or better than that specified.
13. Top chords must be sheathed or purlins provided at spacing indicated on design.
14. Bottom chords require lateral bracing at 10 ft. spacing, or less, if no ceiling is installed, unless otherwise noted.
15. Connections not shown are the responsibility of others.
16. Do not cut or alter truss member or plate without prior approval of an engineer.
17. Install and load vertically unless indicated otherwise.
18. Use of green or treated lumber may pose unacceptable environmental, health or performance risks. Consult with project engineer before use.
19. Review all portions of this design (front, back, words and pictures) before use. Reviewing pictures alone is not sufficient.
20. Design assumes manufacture in accordance with ANSI/TPI 1 Quality Criteria.
21. The design does not take into account any dynamic or other loads other than those expressly stated.