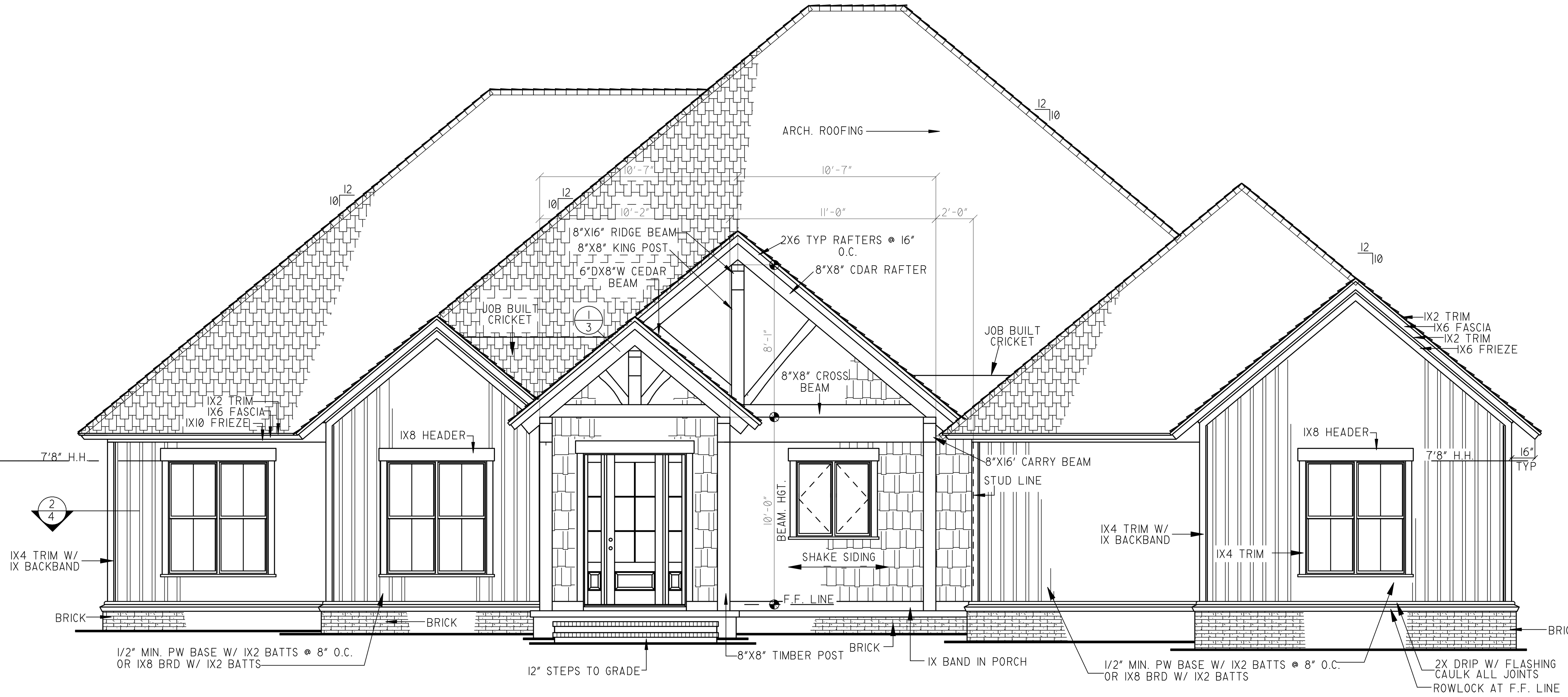

FRONT ELEVATION

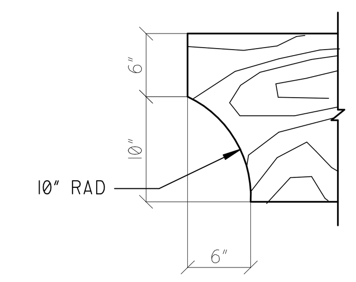

2 ENTRY TIMBER RIDGE CUT DETAIL
1" = 1'-0"

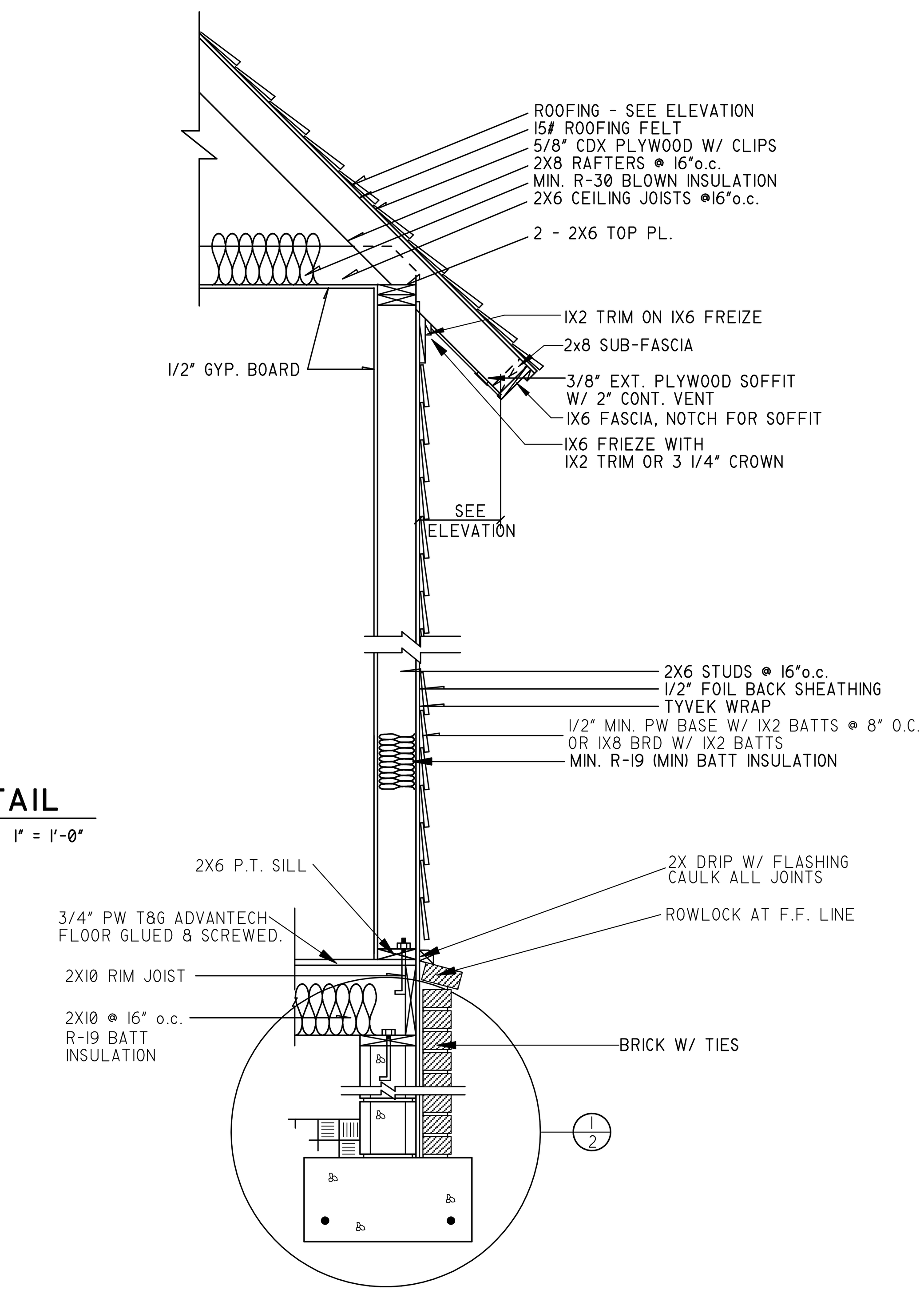

TYP SECTIONAL DETAIL
3/4" = 1'-0"

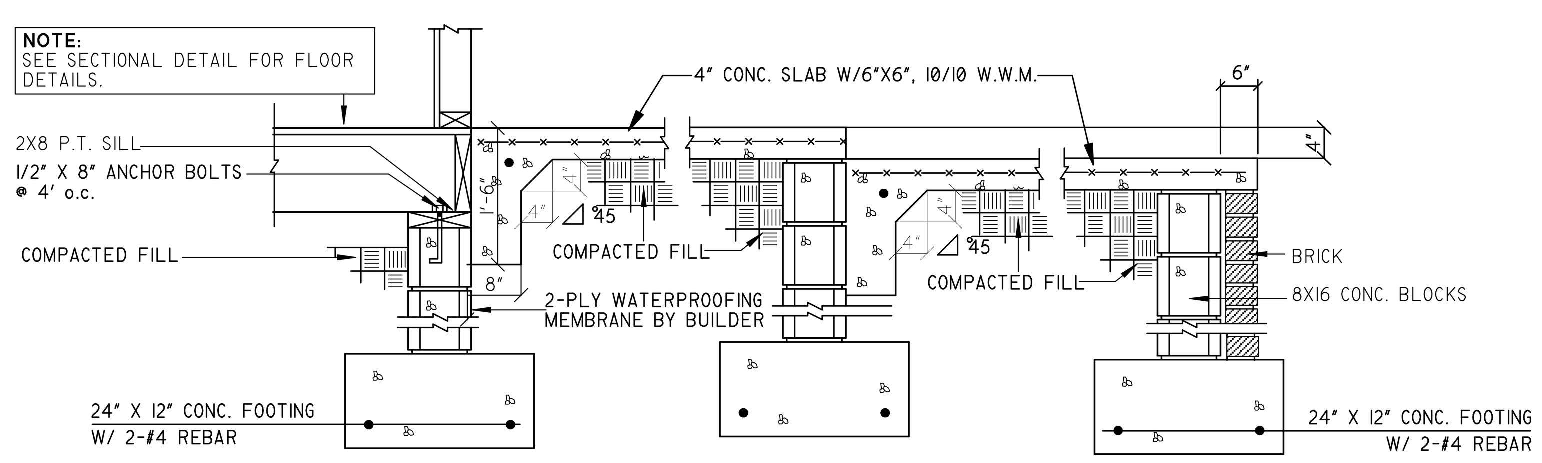

3 STEP DOWN DETAIL
3/4" = 1'-0"

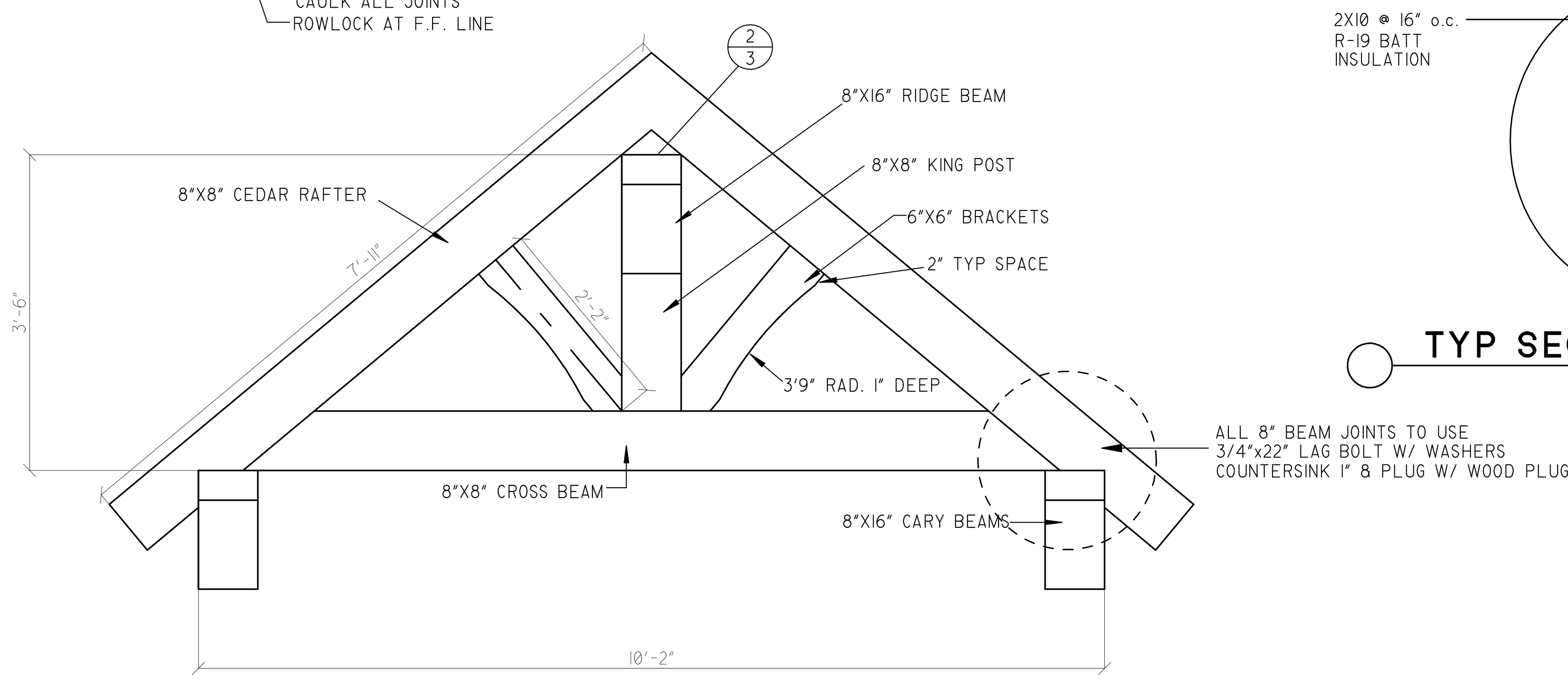

1 ENTRY BEAM DETAIL
3/4" = 1'-0"

NOTE:
1.- ALL BEAMS TO BE CEDAR UNLESS OTHERWISE BY OWNER.

ELEVATION NOTES:

1. GUTTERS AND DOWNSPOUTS ARE NOT SHOWN FOR CLARITY. DOWNSPOUTS SHALL BE LOCATED TOWARDS THE FRONT AND REAR OF THE HOUSE. LOCATE DOWNSPOUTS IN NON-VISUALLY OFFENSIVE LOCATIONS, FOR EXAMPLE, FRONT WALL OF HOUSE, BESIDE PORCH COLUMNS, ETC. GENERAL CONTRACTOR SHALL VERIFY EXISTING GRADES AND COORDINATE ANY NECESSARY ADJUSTMENTS TO HOUSE WITH OWNER.
2. PLUMBING AND HVAC VENTS SHALL BE GROUPED IN ATTIC TO LIMIT ROOF PENETRATIONS AND TO BE LOCATED AWAY FROM PUBLIC VIEW, I.E. AT THE REAR OF THE HOUSE AND SHALL BE PRIMED AND PAINTED TO MATCH ROOF COLOR.
3. PROVIDE ATTIC VENTILATION PER LOCAL CODE REQUIREMENTS.
4. EXTERIOR FLASHING SHALL BE CORRECTLY INSTALLED AT ALL CONNECTIONS BETWEEN ROOFS, WALLS, CHIMNEYS, PROJECTIONS AND PENETRATIONS AS REQUIRED BY APPROVED CONSTRUCTION PRACTICES.
5. CONTRACTOR SHALL PROVIDE ADEQUATE ATTIC VENTILATIONS / ROOF VENTS PER LOCAL GOVERNING CODE. INSTALL CONTINUOUS RIDGE VENTILATION AND PAINT TO MATCH ROOF. PROVIDE APPROPRIATE SOFFIT VENTILATION AT OVERHANGS.

RIGHT ELEVATION

NOTICE DUTY OF COOPERATION

NELSON DESIGN GROUP, LLC, or Michael E. Nelson assumes no liability for any HOME constructed from this plan. Release of these plans contemplates further cooperation among the owner, his contractor and the designer. Design and construction are complex. Although the designer and his consultants performed their services with due care and diligence, they cannot guarantee perfection. Communication is imperfect and every contingency cannot be anticipated. Any ambiguity or discrepancy discovered by the use of these plans shall be reported immediately to the designer. Failure to notify the designer compounds misunderstanding and increases construction costs. A failure to cooperate by a simple notice to the designer shall relieve the designer from responsibility for all consequences. Changes made from the plans without the consent of the designer are unauthorized and shall relieve the designer of responsibility for all consequences arriving out of such changes. Only qualified Designer, Architect, Contractor, or Structural Engineer should attempt to modify any portion of this design. Written dimensions on these drawings shall have precedence over scaled dimensions; contractors shall verify and be responsible for all dimensions and conditions on the job. This office must be notified of any variations from the dimensions and conditions shown by these drawings. Shop details must be submitted to this office for approval before proceeding with fabrication.

REVISIONS	BY
30x42	

Nelson Design Group LLC
RESIDENTIAL PLANNERS • DESIGNERS
NATIONALLY PUBLISHED
5210 STADIUM BLVD. SUITE A JONESBORO, AR. 72404
870.931.5777
FAX. 931.5792
Member AIBD • CPBD
http://www.nelsondesigngroup.com
800.590.2423

AMERICAN INSTITUTE OF BUILDING DESIGN ARKANSAS
MICHAEL E. NELSON
P.B.D. Cert. No. AR-104

© 2022 NELSON DESIGN GROUP, LLC.
Reproduction of these plans, in any form, without the written consent of the Designer, is prohibited.

ELEVATIONS / NOTES

The Gallaher Home

CAD DESIGNED

DATE	1-13-2022
SCALE	1/4" = 1'-0"
BUILDER	
JOB	MENC245-21
DRAWN BY	SMN