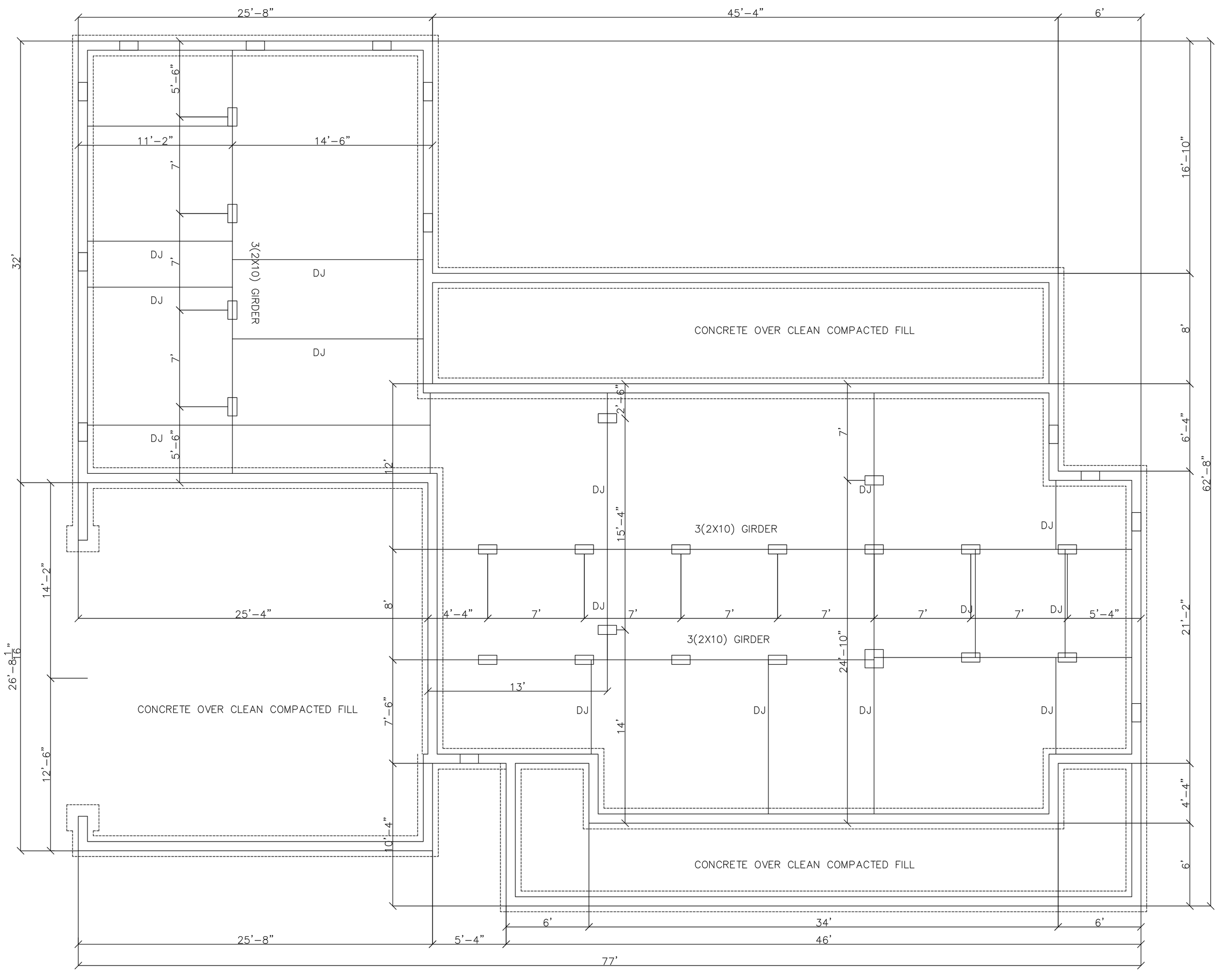

FOUNDATION PLAN
SCALE: 1/4"=1'

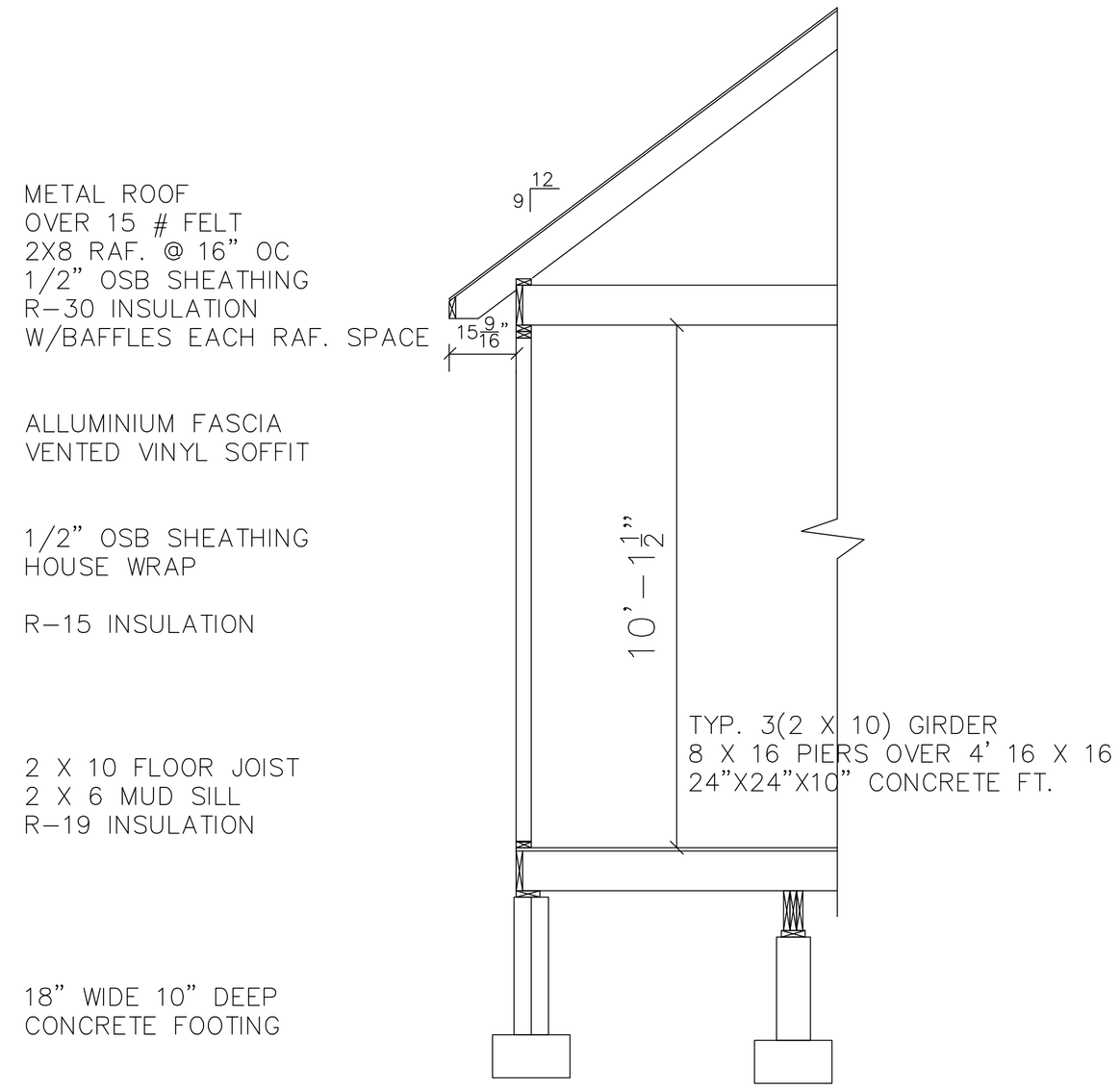

SCALE: 1/2"=1'

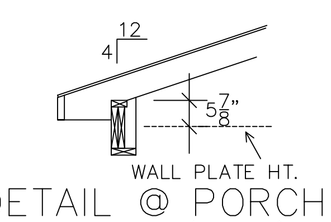

DETAIL @ PORCH
SCALE: 1/2=1'

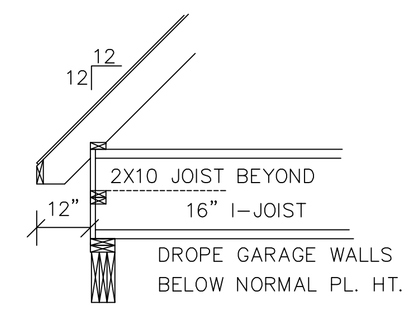

DETAIL @ GARAGE
SCALE: 1/2=1'

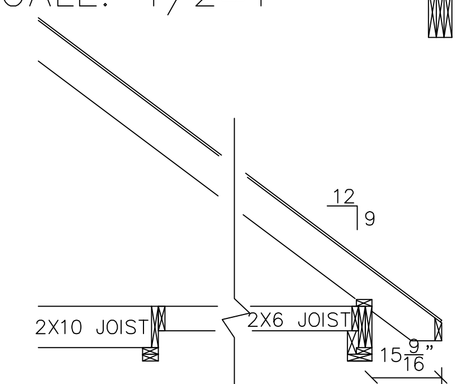

DETAIL @ REAR PORCH
SCALE: 1/2=1'