Job	Truss	Truss Type	Qty	Ply	Sloan-Roof - Bonus
21030004-C	A01	Piggyback Base	3	1	Job Reference (optional)

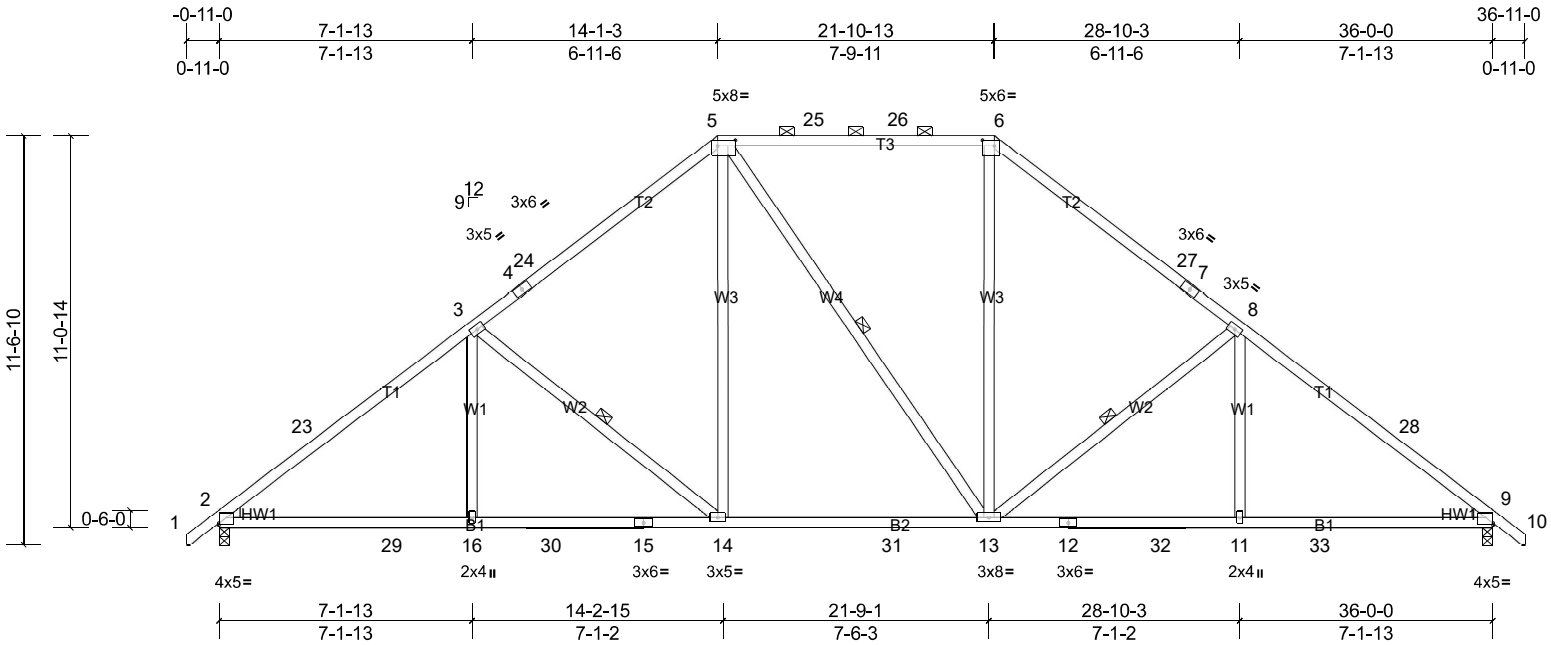

Scale = 1:65.1

Plate Offsets (X, Y): [2:Edge,0-0-9], [5:0-6-0,0-2-0], [6:0-4-0,0-2-0], [9:Edge,0-0-9]

Loading	(psf)	Spacing	2-0-0	CSI		DEFL	in	(loc)	l/defl	L/d	PLATES	GRIP
TCLL (roof)	20.0	Plate Grip DOL	1.15	TC	0.91	Vert(LL)	-0.18	13-14	>999	240	MT20	244/190
Snow (Pf/Pg)	18.9/20.0	Lumber DOL	1.15	BC	0.82	Vert(CT)	-0.30	13-14	>999	180		
TCDL	10.0	Rep Stress Incr	YES	WB	0.24	Horz(CT)	0.09	9	n/a	n/a		
BCLL	0.0*	Code	IRC2018/TPI2014	Matrix-MSH								
BCDL	10.0										Weight: 214 lb	FT = 20%

LUMBER

TOP CHORD	2x4 SP No.2 *Except* T3:2x4 SP No.1
BOT CHORD	2x4 SP No.2
WEBS	2x4 SP No.2
WEDGE	Left: 2x4 SP No.3
	Right: 2x4 SP No.3

BRACING

TOP CHORD	Structural wood sheathing directly applied or 3-4-8 oc purlins, except 2-0-0 oc purlins (2-2-0 max.): 5-6.
BOT CHORD	Rigid ceiling directly applied or 10-0-0 oc bracing.
WEBS	1 Row at midpt 3-14, 5-13, 8-13

MiTek recommends that Stabilizers and required cross bracing be installed during truss erection, in accordance with Stabilizer Installation guide.

REACTIONS (lb/size) 2=1299/0-3-8, (min. 0-2-0), 9=1299/0-3-8, (min. 0-2-0)
Max Horiz 2=-211 (LC 11)
Max Grav 2=1699 (LC 28), 9=1694 (LC 29)

FORCES (lb) - Max. Comp./Max. Ten. - All forces 250 (lb) or less except when shown.

TOP CHORD 2-23=-2321/84, 3-23=-2223/116, 3-4=-1784/145, 4-24=-1729/153, 5-24=-1674/190, 5-25=-1336/205, 25-26=-1336/205, 6-26=-1336/205, 6-27=-1665/190, 7-27=-1719/153, 7-8=-1775/145, 8-28=-2214/116, 9-28=-2312/84

BOT CHORD 2-29=-142/1907, 16-29=-14/1907, 16-30=-14/1907, 15-30=-14/1907, 14-15=-14/1907, 14-31=0/1395, 13-31=0/1395, 12-13=0/1771, 12-32=0/1771, 11-32=0/1771, 11-33=0/1771, 9-33=0/1771

WEBS 3-16=0/354, 3-14=-661/122, 5-14=0/721, 6-13=0/677, 8-13=-662/122, 8-11=0/355

NOTES

1) Unbalanced roof live loads have been considered for this design.
2) Wind: ASCE 7-16; Vult=130mph (3-second gust) Vasd=103mph; TCDL=6.0psf; BCDL=6.0psf; h=25ft; Cat. II; Exp B; Enclosed; MWFRS (envelope) and C-C Exterior(2E) -0-10-7 to 2-8-13, Interior (1) 2-8-13 to 14-1-3, Exterior(2R) 14-1-3 to 19-2-4, Interior (1) 19-2-4 to 21-10-13, Exterior(2R) 21-10-13 to 26-11-15, Interior (1) 26-11-15 to 36-10-7 zone;C-C for members and forces & MWFRS for reactions shown; Lumber DOL=1.60 plate grip DOL=1.33
3) TCLL: ASCE 7-16; Pr=20.0 psf (roof LL: Lum DOL=1.15 Plate DOL=1.15); Pg=20.0 psf; Pf=18.9 psf (Lum DOL=1.15 Plate DOL=1.15); Is=1.0; Rough Cat B; Fully Exp.; Ce=0.9; Cs=1.00; Ct=1.10, Lu=50-0-0; Min. flat roof snow load governs. Rain surcharge applied to all exposed surfaces with slopes less than 0.500/12 in accordance with IBC 1608.3.4.
4) This truss has been designed for greater of min roof live load of 12.0 psf or 2.00 times flat roof load of 13.9 psf on overhangs non-concurrent with other live loads.
5) Provide adequate drainage to prevent water ponding.
6) * This truss has been designed for a live load of 20.0psf on the bottom chord in all areas where a rectangle 3-06-00 tall by 2-00-00 wide will fit between the bottom chord and any other members, with BCDL = 10.0psf.
7) This truss is designed in accordance with the 2018 International Residential Code sections R502.11.1 and R802.10.2 and referenced standard ANSI/TPI 1.
8) Graphical purlin representation does not depict the size or the orientation of the purlin along the top and/or bottom chord.

LOAD CASE(S) Standard

Job	Truss	Truss Type	Qty	Ply	Sloan-Roof - Bonus
21030004-C	A01A	Piggyback Base	2	1	Job Reference (optional)

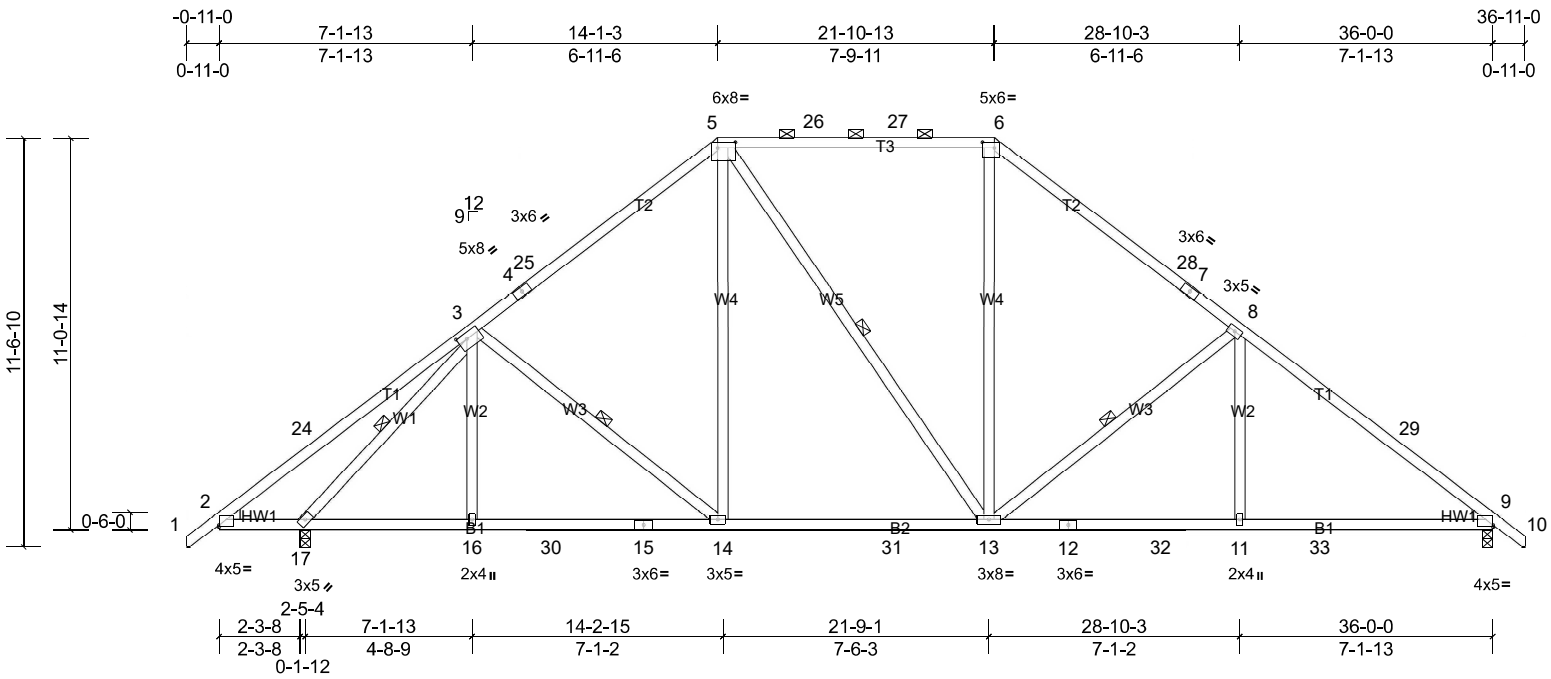

Scale = 1:65.1

Plate Offsets (X, Y): [2:Edge,0-0-9], [3:0-3-1,0-2-0], [5:0-6-0,0-2-0], [6:0-4-0,0-2-0], [9:Edge,0-0-9]

Loading	(psf)	Spacing	2-0-0	CSI		DEFL	in	(loc)	l/defl	L/d	PLATES	GRIP
TCLL (roof)	20.0	Plate Grip DOL	1.15	TC	0.88	Vert(LL)	-0.14	13-14	>999	240	MT20	244/190
Snow (Pf/Pg)	18.9/20.0	Lumber DOL	1.15	BC	0.76	Vert(CT)	-0.24	13-14	>999	180		
TCDL	10.0	Rep Stress Incr	YES	WB	0.48	Horz(CT)	0.07	9	n/a	n/a		
BCLL	0.0*	Code	IRC2018/TPI2014	Matrix-MSH								
BCDL	10.0										Weight: 225 lb	FT = 20%

LUMBER

TOP CHORD	2x4 SP No.2 *Except* T3:2x4 SP No.1
BOT CHORD	2x4 SP No.2
WEBS	2x4 SP No.2
WEDGE	Left: 2x4 SP No.3 Right: 2x4 SP No.3

REACTIONS (lb/size) 9=1211/0-3-8, (min. 0-1-14), 17=1388/0-3-8, (min. 0-2-2)
Max Horiz 17=-211 (LC 11)
Max Grav 9=1580 (LC 29), 17=1785 (LC 28)

BRACING

TOP CHORD	Structural wood sheathing directly applied or 3-6-8 oc purlins, except 2-0-0 oc purlins (2-4-4 max.): 5-6.
BOT CHORD	Rigid ceiling directly applied or 10-0-0 oc bracing, Except: 6-0-0 oc bracing: 2-17.
WEBS	1 Row at midpt 3-14, 8-13, 5-13, 3-17

MiTek recommends that Stabilizers and required cross bracing be installed during truss erection, in accordance with Stabilizer Installation guide.

FORCES (lb) - Max. Comp./Max. Ten. - All forces 250 (lb) or less except when shown.

TOP CHORD 2-24=-172/385, 3-24=-9/347, 3-4=-1490/130, 4-25=-1434/139, 5-25=-1380/175, 5-26=-1179/197, 26-27=-1179/197, 6-27=-1179/197, 6-28=-1470/186, 7-28=-1525/149, 7-8=-1580/140, 8-29=-2027/112, 9-29=-2122/80

BOT CHORD 16-17=-28/1267, 16-30=-28/1268, 15-30=-28/1268, 14-15=-28/1268, 14-31=0/1154, 13-31=0/1154, 12-13=0/1620, 12-32=0/1620, 11-32=0/1620, 11-33=0/1620, 9-33=0/1620

WEBS 3-16=0/263, 5-14=0/424, 6-13=0/559, 8-11=0/359, 8-13=-668/122, 3-17=-1972/99

NOTES

1) Unbalanced roof live loads have been considered for this design.
2) Wind: ASCE 7-16; Vult=130mph (3-second gust) Vasd=103mph; TCDL=6.0psf; BCDL=6.0psf; h=25ft; Cat. II; Exp B; Enclosed; MWFRS (envelope) and C-C Exterior(2E) -0-10-7 to 2-8-13, Interior (1) 2-8-13 to 14-1-3, Exterior(2R) 14-1-3 to 19-2-4, Interior (1) 19-2-4 to 21-10-13, Exterior(2R) 21-10-13 to 26-11-15, Interior (1) 26-11-15 to 36-10-7 zone;C-C for members and forces & MWFRS for reactions shown; Lumber DOL=1.60 plate grip DOL=1.33
3) TCLL: ASCE 7-16; Pr=20.0 psf (roof LL: Lum DOL=1.15 Plate DOL=1.15); Pg=20.0 psf; Pf=18.9 psf (Lum DOL=1.15 Plate DOL=1.15); Is=1.0; Rough Cat B; Fully Exp.; Ce=0.9; Cs=1.00; Ct=1.10, Lu=50-0-0; Min. flat roof snow load governs. Rain surcharge applied to all exposed surfaces with slopes less than 0.500/12 in accordance with IBC 1608.3.4.
4) This truss has been designed for greater of min roof live load of 12.0 psf or 2.00 times flat roof load of 13.9 psf on overhangs non-concurrent with other live loads.
5) Provide adequate drainage to prevent water ponding.
6) * This truss has been designed for a live load of 20.0psf on the bottom chord in all areas where a rectangle 3-06-00 tall by 2-00-00 wide will fit between the bottom chord and any other members, with BCDL = 10.0psf.
7) This truss is designed in accordance with the 2018 International Residential Code sections R502.11.1 and R802.10.2 and referenced standard ANSI/TPI 1.
8) Graphical purlin representation does not depict the size or the orientation of the purlin along the top and/or bottom chord.

LOAD CASE(S) Standard

Job	Truss	Truss Type	Qty	Ply	Sloan-Roof - Bonus
21030004-C	A01G	Piggyback Base	1	1	Job Reference (optional)

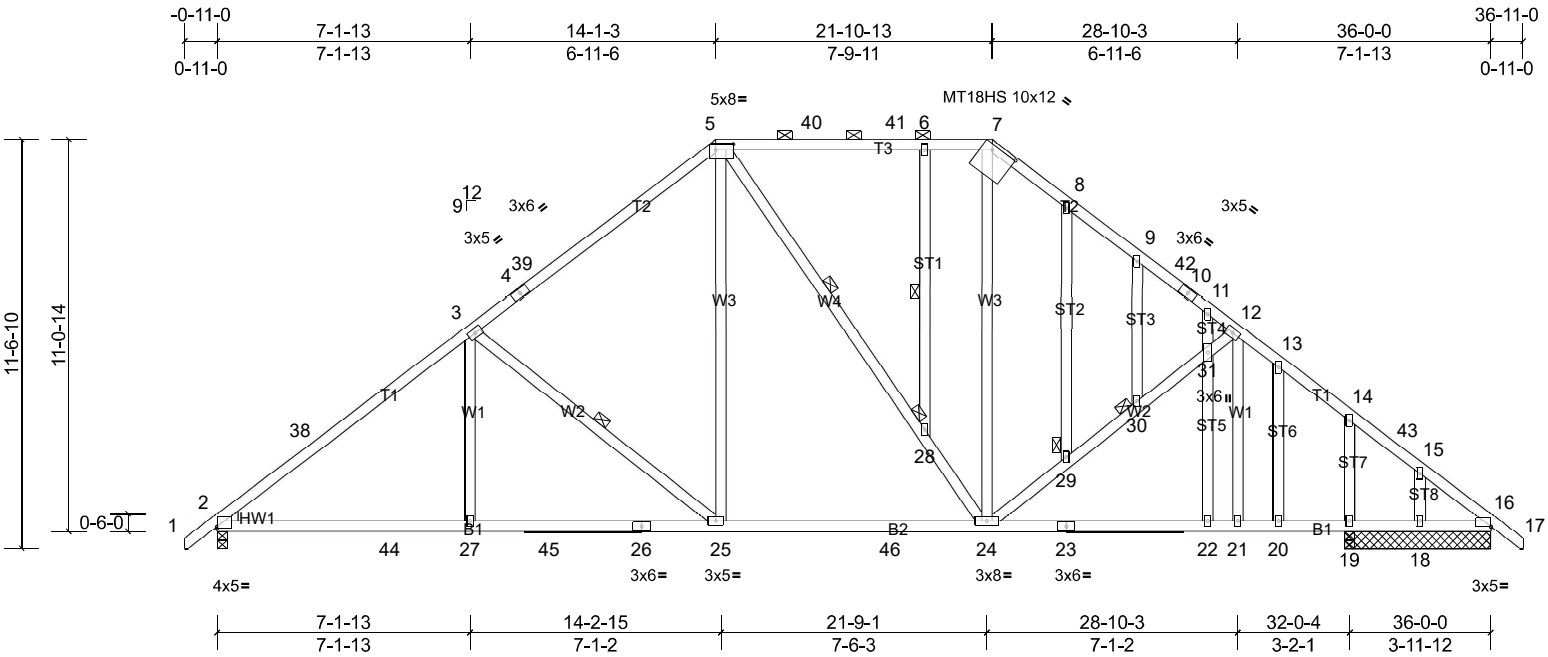

Scale = 1:65.1

Plate Offsets (X, Y): [2:Edge,0-0-9], [5:0-6-0,0-2-0], [7:0-8-8,0-1-12], [16:Edge,0-0-1]

Loading	(psf)	Spacing	2-0-0	CSI		DEFL	in	(loc)	l/defl	L/d	PLATES	GRIP
TCLL (roof)	20.0	Plate Grip DOL	1.15	TC	0.75	Vert(LL)	-0.16	24-25	>999	240	MT20	244/190
Snow (Pf/Pg)	18.9/20.0	Lumber DOL	1.15	BC	0.79	Vert(CT)	-0.27	24-25	>999	180	MT18HS	244/190
TCDL	10.0	Rep Stress Incr	YES	WB	0.37	Horz(CT)	0.09	16	n/a	n/a		
BCLL	0.0*	Code	IRC2018/TPI2014	Matrix-MSH								
BCDL	10.0										Weight: 264 lb	FT = 20%

LUMBER

TOP CHORD	2x4 SP No.2
BOT CHORD	2x4 SP No.2
WEBS	2x4 SP No.2
OTHERS	2x4 SP No.3 *Except* ST1,ST2:2x4 SP No.2
WEDGE	Left: 2x4 SP No.3

BRACING

TOP CHORD	Structural wood sheathing directly applied or 3-5-6 oc purlins, except 2-0-0 oc purlins (3-11-2 max.): 5-7.
BOT CHORD	Rigid ceiling directly applied or 10-0-0 oc bracing.
WEBS	1 Row at midpt 3-25, 5-28, 6-28
JOINTS	1 Brace at Jt(s): 28, 29, 30

MiTek recommends that Stabilizers and required cross bracing be installed during truss erection, in accordance with Stabilizer Installation guide.

REACTIONS All bearings 4-1-8. except 2=0-3-8, 19=0-3-8
(lb) - Max Horiz 2=211 (LC 12)
Max Uplift All uplift 100 (lb) or less at joint(s) except 18=-191 (LC 31)
Max Grav All reactions 250 (lb) or less at joint(s) 18 except 2=1650 (LC 28), 16=1393 (LC 3), 19=442 (LC 29), 32=1393 (LC 3)

FORCES (lb) - Max. Comp./Max. Ten. - All forces 250 (lb) or less except when shown.

TOP CHORD 2-38=-2237/83, 3-38=-2139/115, 3-4=-1697/143, 4-39=-1642/151, 5-39=-1585/188, 5-40=-1238/205, 40-41=-1238/205, 6-41=-1238/205, 6-7=-1238/205, 7-8=-1500/190, 8-9=-1565/168, 9-42=-1537/135, 10-42=-1553/129, 10-11=-1577/123, 11-12=-1599/86, 12-13=-1819/134, 13-14=-1872/112, 14-43=-1747/75, 15-43=-1801/66, 15-16=-1881/31

BOT CHORD 2-44=-144/1844, 27-44=-9/1844, 27-45=-9/1844, 26-45=-9/1844, 25-26=-9/1844, 25-46=0/1329, 24-46=0/1329, 23-24=0/1451, 22-23=0/1451, 21-22=0/1451, 20-21=0/1451, 19-20=0/1451, 18-19=0/1451, 16-18=0/1451

WEBS 3-27=0/356, 5-25=0/719, 7-24=-4/616, 3-25=-666/122, 24-29=-383/119, 29-30=-384/110, 30-31=-325/81, 12-31=-351/133

NOTES

1) Unbalanced roof live loads have been considered for this design.
2) Wind: ASCE 7-16; Vult=130mph (3-second gust) Vasd=103mph; TCDL=6.0psf; BCDL=6.0psf; h=25ft; Cat. II; Exp B; Enclosed; MWFRS (envelope) and C-C Exterior(2E) -0-10-7 to 2-8-13, Interior (1) 2-8-13 to 14-1-3, Exterior(2R) 14-1-3 to 19-2-4, Interior (1) 19-2-4 to 21-10-13, Exterior(2R) 21-10-13 to 26-11-15, Interior (1) 26-11-15 to 36-10-7 zone;C-C for members and forces & MWFRS for reactions shown; Lumber DOL=1.60 plate grip DOL=1.33
3) Truss designed for wind loads in the plane of the truss only. For studs exposed to wind (normal to the face), see Standard Industry Gable End Details as applicable, or consult qualified building designer as per ANSI/TPI 1.
4) TCLL: ASCE 7-16; Pr=20.0 psf (roof LL: Lum DOL=1.15 Plate DOL=1.15); Pg=20.0 psf; Pf=18.9 psf (Lum DOL=1.15 Plate DOL=1.15); Is=1.0; Rough Cat B; Fully Exp.; Ce=0.9; Cs=1.00; Ct=1.10, Lu=50-0-0; Min. flat roof snow load governs. Rain surcharge applied to all exposed surfaces with slopes less than 0.500/12 in accordance with IBC 1608.3.4.
5) This truss has been designed for greater of min roof live load of 12.0 psf or 2.00 times flat roof load of 13.9 psf on overhangs non-concurrent with other live loads.
6) Provide adequate drainage to prevent water ponding.
7) All plates are MT20 plates unless otherwise indicated.
8) All plates are 2x4 MT20 unless otherwise indicated.
9) Gable studs spaced at 2-0-0 oc.
10) * This truss has been designed for a live load of 20.0psf on the bottom chord in all areas where a rectangle 3-06-00 tall by 2-00-00 wide will fit between the bottom chord and any other members, with BCDL = 10.0psf.
11) One RT7A MiTek connectors recommended to connect truss to bearing walls due to UPLIFT at jt(s) 18. This connection is for uplift only and does not consider lateral forces.
12) This truss is designed in accordance with the 2018 International Residential Code sections R502.11.1 and R802.10.2 and referenced standard ANSI/TPI 1.

Continued on page 2

13) Graphical purlin representation does not depict the size or the orientation of the purlin along the top and/or bottom chord.

LOAD CASE(S) Standard

Job	Truss	Truss Type	Qty	Ply	Sloan-Roof - Bonus
21030004-C	A02	Piggyback Base	10	1	Job Reference (optional)

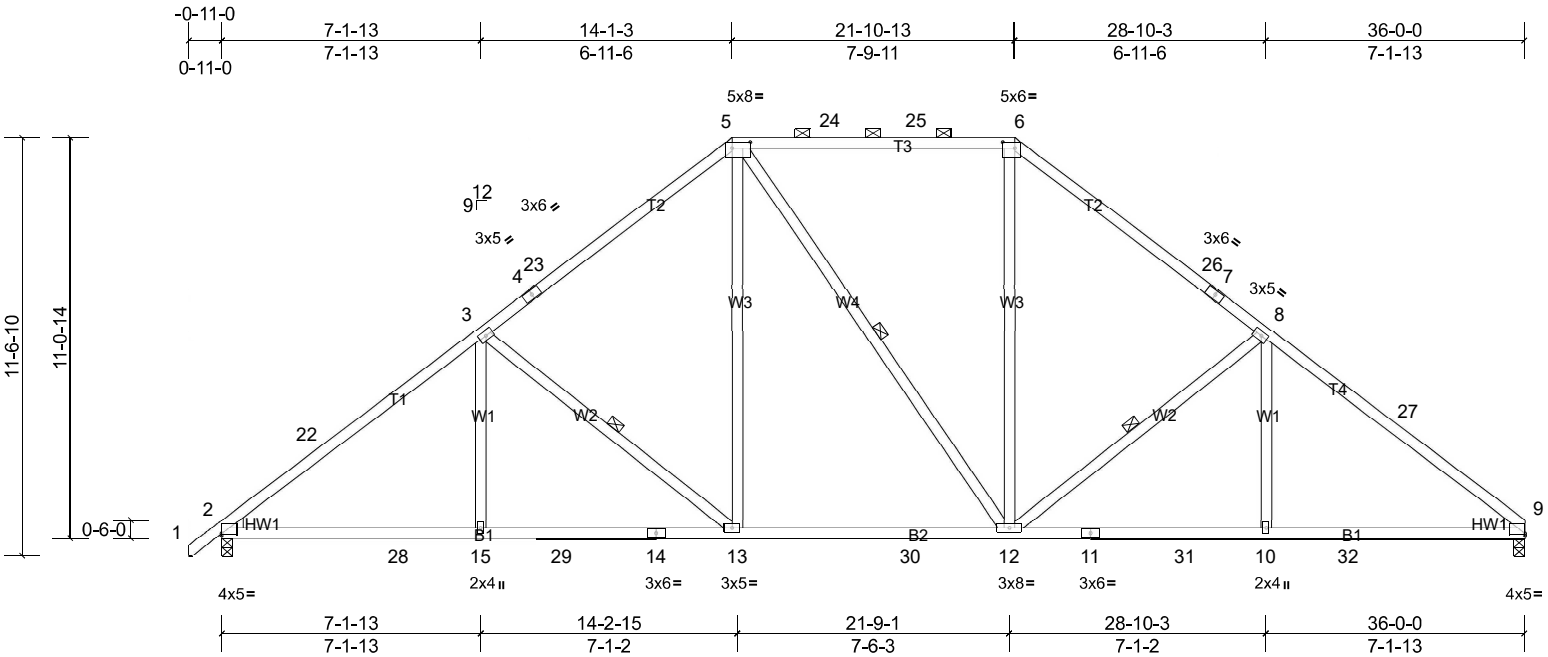

Scale = 1:63.7

Plate Offsets (X, Y): [2:Edge,0-0-9], [5:0-6-0,0-2-0], [6:0-4-0,0-2-0], [9:Edge,0-0-9]

Loading	(psf)	Spacing	2-0-0	CSI		DEFL	in	(loc)	l/defl	L/d	PLATES	GRIP
TCLL (roof)	20.0	Plate Grip DOL	1.15	TC	0.91	Vert(LL)	-0.18	12-13	>999	240	MT20	244/190
Snow (Pf/Pg)	18.9/20.0	Lumber DOL	1.15	BC	0.82	Vert(CT)	-0.30	12-13	>999	180		
TCDL	10.0	Rep Stress Incr	YES	WB	0.24	Horz(CT)	0.09	9	n/a	n/a		
BCLL	0.0*	Code	IRC2018/TPI2014	Matrix-MSH								
BCDL	10.0										Weight: 213 lb	FT = 20%

LUMBER

TOP CHORD	2x4 SP No.2 *Except* T3:2x4 SP No.1
BOT CHORD	2x4 SP No.2
WEBS	2x4 SP No.2
WEDGE	Left: 2x4 SP No.3
	Right: 2x4 SP No.3

BRACING

TOP CHORD	Structural wood sheathing directly applied or 3-3-2 oc purlins, except 2-0-0 oc purlins (2-2-0 max.): 5-6.
BOT CHORD	Rigid ceiling directly applied or 10-0-0 oc bracing.
WEBS	1 Row at midpt 3-13, 8-12, 5-12

MiTek recommends that Stabilizers and required cross bracing be installed during truss erection, in accordance with Stabilizer Installation guide.

REACTIONS (lb/size) 2=1300/0-3-8, (min. 0-2-0), 9=1257/0-3-8, (min. 0-1-15)
Max Horiz 2=207 (LC 12)
Max Grav 2=1700 (LC 28), 9=1646 (LC 29)

FORCES (lb) - Max. Comp./Max. Ten. - All forces 250 (lb) or less except when shown.

TOP CHORD 2-22=-2322/85, 3-22=-2223/116, 3-4=-1785/145, 4-23=-1730/154, 5-23=-1675/190, 5-24=-1337/205, 24-25=-1337/205, 6-25=-1337/205, 6-26=-1666/194, 7-26=-1721/154, 7-8=-1776/148, 8-27=-2214/124, 9-27=-2316/96

BOT CHORD 2-28=-147/1901, 15-28=-42/1901, 15-29=-42/1901, 14-29=-42/1901, 13-14=-42/1901, 13-30=0/1390, 12-30=0/1390, 11-12=-12/1775, 11-31=-12/1775, 10-31=-12/1775, 10-32=-12/1775, 9-32=-12/1775

WEBS 3-15=0/354, 5-13=0/721, 6-12=0/678, 8-10=0/356, 3-13=-661/122, 8-12=-666/123

NOTES

1) Unbalanced roof live loads have been considered for this design.
2) Wind: ASCE 7-16; Vult=130mph (3-second gust) Vasd=103mph; TCDL=6.0psf; BCDL=6.0psf; h=25ft; Cat. II; Exp B; Enclosed; MWFRS (envelope) and C-C Exterior(2E) -0-10-7 to 2-8-13, Interior (1) 2-8-13 to 14-1-3, Exterior(2R) 14-1-3 to 19-2-4, Interior (1) 19-2-4 to 21-10-13, Exterior(2R) 21-10-13 to 26-11-15, Interior (1) 26-11-15 to 36-0-0 zone;C-C for members and forces & MWFRS for reactions shown; Lumber DOL=1.60 plate grip DOL=1.33
3) TCLL: ASCE 7-16; Pr=20.0 psf (roof LL: Lum DOL=1.15 Plate DOL=1.15); Pg=20.0 psf; Pf=18.9 psf (Lum DOL=1.15 Plate DOL=1.15); Is=1.0; Rough Cat B; Fully Exp.; Ce=0.9; Cs=1.00; Ct=1.10, Lu=50-0-0; Min. flat roof snow load governs. Rain surcharge applied to all exposed surfaces with slopes less than 0.500/12 in accordance with IBC 1608.3.4.
4) This truss has been designed for greater of min roof live load of 12.0 psf or 2.00 times flat roof load of 13.9 psf on overhangs non-concurrent with other live loads.
5) Provide adequate drainage to prevent water ponding.
6) * This truss has been designed for a live load of 20.0psf on the bottom chord in all areas where a rectangle 3-06-00 tall by 2-00-00 wide will fit between the bottom chord and any other members, with BCDL = 10.0psf.
7) This truss is designed in accordance with the 2018 International Residential Code sections R502.11.1 and R802.10.2 and referenced standard ANSI/TPI 1.
8) Graphical purlin representation does not depict the size or the orientation of the purlin along the top and/or bottom chord.

LOAD CASE(S) Standard

Job	Truss	Truss Type	Qty	Ply	Sloan-Roof - Bonus
21030004-C	A02G	Piggyback Base Supported Gable	1	1	Job Reference (optional)

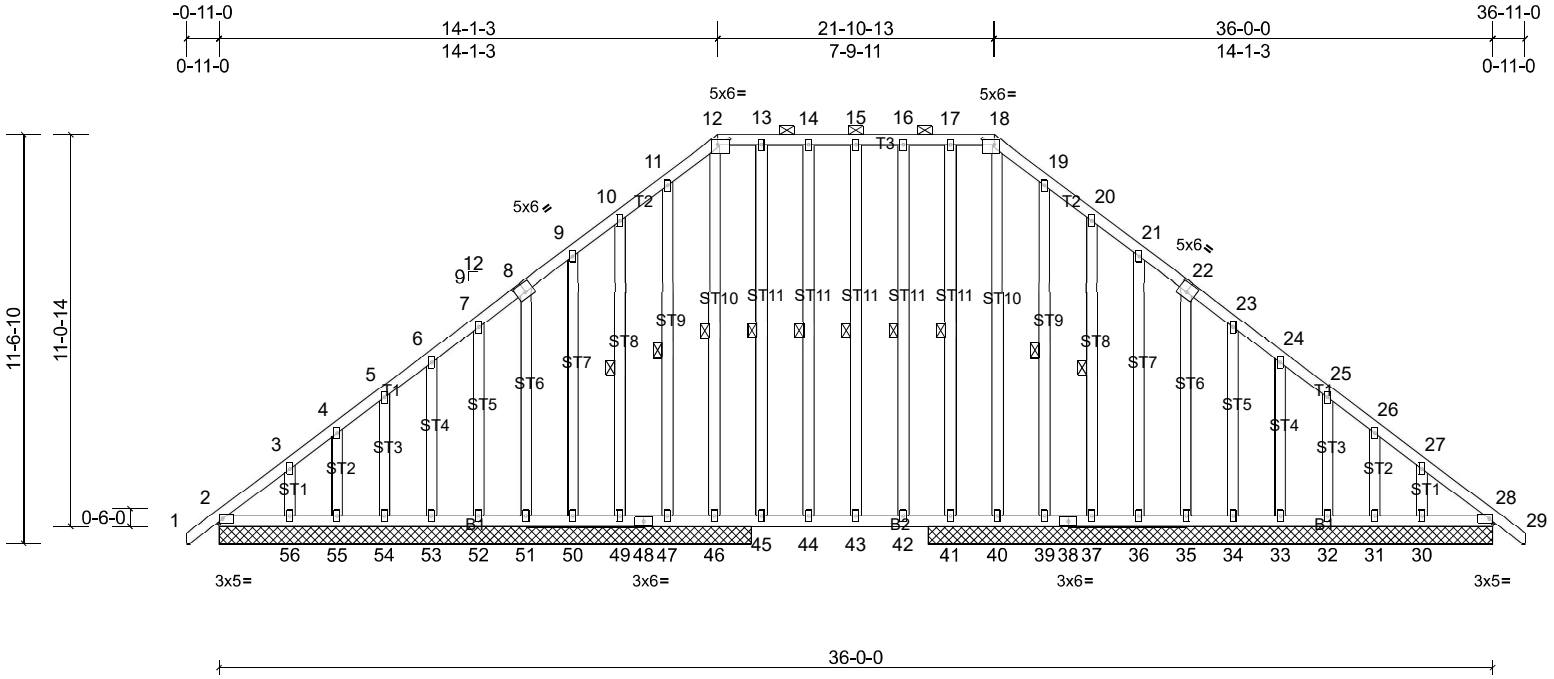

Scale = 1:65.1

Plate Offsets (X, Y): [8:0-3-0,0-3-0], [12:0-4-0,0-2-0], [18:0-4-0,0-2-0], [22:0-3-0,0-3-0]

Loading	(psf)	Spacing	2-0-0	CSI		DEFL	in	(loc)	l/defl	L/d	PLATES	GRIP
TCLL (roof)	20.0	Plate Grip DOL	1.15	TC	0.25	Vert(LL)	-0.04	43-44	>999	240	MT20	244/190
Snow (Pf/Pg)	18.9/20.0	Lumber DOL	1.15	BC	0.35	Vert(CT)	-0.08	43-44	>999	180		
TCDL	10.0	Rep Stress Incr	YES	WB	0.23	Horz(CT)	0.01	28	n/a	n/a		
BCLL	0.0*	Code	IRC2018/TPI2014	Matrix-MSH								
BCDL	10.0										Weight: 376 lb	FT = 20%

LUMBER

TOP CHORD	2x4 SP No.2
BOT CHORD	2x4 SP No.2
OTHERS	2x4 SP No.2 *Except* ST4,ST3,ST2,ST1:2x4 SP No.3

REACTIONS All bearings 15-11-8. except 2=15-0-8, 46=15-0-8, 47=15-0-8, 49=15-0-8, 50=15-0-8, 51=15-0-8, 52=15-0-8, 53=15-0-8, 54=15-0-8, 55=15-0-8, 56=15-0-8, 57=15-0-8

(lb) - Max Horiz 2=211 (LC 12), 57=211 (LC 12)

Max Uplift All uplift 100 (lb) or less at joint(s) 2, 28, 30, 31, 32, 33, 34, 35, 36, 37, 39, 41, 49, 50, 51, 52, 53, 54, 55, 56, 57, 60 except 40=-204 (LC 34), 47=-190 (LC 35)

Max Grav All reactions 250 (lb) or less at joint(s) 2, 28, 30, 31, 32, 33, 34, 35, 36, 37, 39, 40, 47, 49, 50, 51, 52, 53, 54, 55, 56, 57, 60 except 41=554 (LC 34), 46=500 (LC 34)

FORCES (lb) - Max. Comp./Max. Ten. - All forces 250 (lb) or less except when shown.

TOP CHORD 11-12=-147/265, 18-19=-169/268

WEBS 17-41=-251/29

BRACING

TOP CHORD Structural wood sheathing directly applied or 6-0-0 oc purlins, except
2-0-0 oc purlins (6-0-0 max.): 12-18.

BOT CHORD Rigid ceiling directly applied or 10-0-0 oc bracing.

WEBS 1 Row at midpt 15-43, 14-44, 13-45, 12-46, 11-47, 10-49, 16-42, 17-41, 19-39, 20-37

MiTek recommends that Stabilizers and required cross bracing be installed during truss erection, in accordance with Stabilizer Installation guide.

NOTES

1) Unbalanced roof live loads have been considered for this design.
2) Wind: ASCE 7-16; Vult=130mph (3-second gust) Vasd=103mph; TCDL=6.0psf; BCDL=6.0psf; h=25ft; Cat. II; Exp B; Enclosed; MWFRS (envelope) and C-C Corner(3E) -0-10-7 to 2-8-13, Exterior(2N) 2-8-13 to 14-1-3, Corner(3R) 14-1-3 to 17-8-6, Exterior(2N) 17-8-6 to 21-10-13, Corner(3R) 21-10-13 to 25-6-1, Exterior(2N) 25-6-1 to 36-10-7 zone;C-C for members and forces & MWFRS for reactions shown; Lumber DOL=1.60 plate grip DOL=1.33
3) Truss designed for wind loads in the plane of the truss only. For studs exposed to wind (normal to the face), see Standard Industry Gable End Details as applicable, or consult qualified building designer as per ANSI/TPI 1.
4) TCLL: ASCE 7-16; Pr=20.0 psf (roof LL: Lum DOL=1.15 Plate DOL=1.15); Pg=20.0 psf; Pf=18.9 psf (Lum DOL=1.15 Plate DOL=1.15); Is=1.0; Rough Cat B; Fully Exp.; Ce=0.9; Cs=1.00; Ct=1.10, Lu=50-0-0; Min. flat roof snow load governs. Rain surcharge applied to all exposed surfaces with slopes less than 0.500/12 in accordance with IBC 1608.3.4.
5) This truss has been designed for greater of min roof live load of 12.0 psf or 2.00 times flat roof load of 13.9 psf on overhangs non-concurrent with other live loads.
6) Provide adequate drainage to prevent water ponding.
7) All plates are 2x4 MT20 unless otherwise indicated.
8) Gable studs spaced at 1-4-0 oc.
9) * This truss has been designed for a live load of 20.0psf on the bottom chord in all areas where a rectangle 3-06-00 tall by 2-00-00 wide will fit between the bottom chord and any other members.
10) One RT7A MiTek connectors recommended to connect truss to bearing walls due to UPLIFT at jt(s) 2, 28, 47, 49, 50, 51, 52, 53, 54, 55, 56, 41, 40, 39, 37, 36, 35, 34, 33, 32, 31, and 30. This connection is for uplift only and does not consider lateral forces.
11) This truss is designed in accordance with the 2018 International Residential Code sections R502.11.1 and R802.10.2 and referenced standard ANSI/TPI 1.
12) Graphical purlin representation does not depict the size or the orientation of the purlin along the top and/or bottom chord.

Continued on page 2

LOAD CASE(S) Standard

Job	Truss	Truss Type	Qty	Ply	Sloan-Roof - Bonus
21030004-C	B02	Piggyback Base	5	1	Job Reference (optional)

ID:O3pVQPS?HTPbHNNHs8JfOfyXU54-nzWwigThYIXtUf2FEnXwfljCbMvvW1U0yANvzPz8fY6

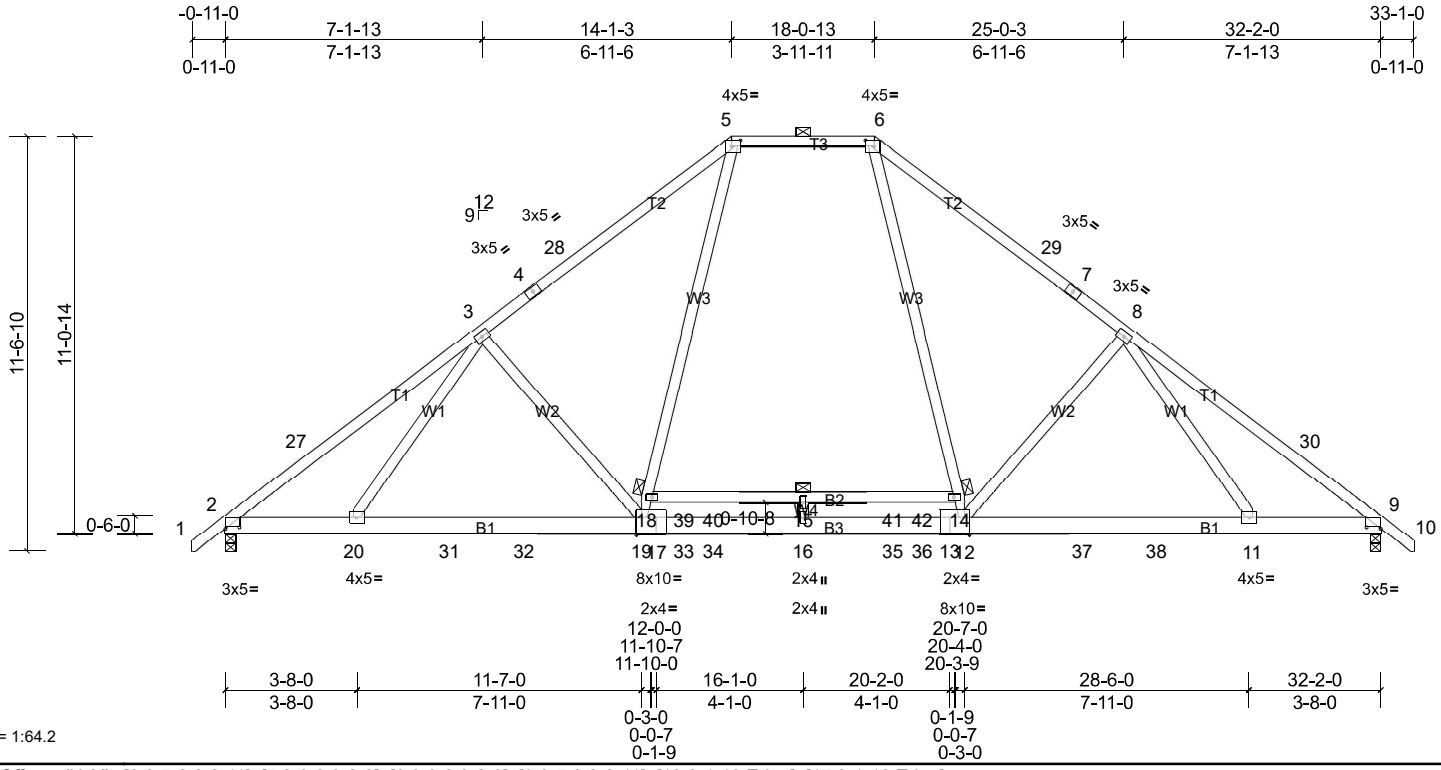

Scale = 1:64.2

Plate Offsets (X, Y): [2:0-5-0,0-0-11], [5:0-3-0,0-2-0], [6:0-3-0,0-2-0], [9:0-5-0,0-0-11], [13:0-1-12,Edge], [17:0-1-12,Edge]

Loading	(psf)	Spacing	2-0-0	CSI		DEFL	in	(loc)	l/defl	L/d	PLATES	GRIP
TCLL (roof)	20.0	Plate Grip DOL	1.15	TC	0.94	Vert(LL)	-0.26	19-20	>999	240	MT20	244/190
Snow (Pf/Pg)	18.9/20.0	Lumber DOL	1.15	BC	0.90	Vert(CT)	-0.38	15-18	>999	180		
TCDL	10.0	Rep Stress Incr	YES	WB	0.45	Horz(CT)	0.04	9	n/a	n/a		
BCLL	0.0 *	Code	IRC2018/TPI2014	Matrix-MSH								
BCDL	10.0										Weight: 221 lb	FT = 20%

LUMBER

TOP CHORD	2x4 SP No.2
BOT CHORD	2x6 SP 2400F 2.0E *Except* B2:2x4 SP No.2, B3:2x6 SP No.2
WEBS	2x4 SP No.3 *Except* W3:2x4 SP No.2

REACTIONS (lb/size) 2=1338/0-3-8, (min. 0-1-8), 9=1338/0-3-8, (min. 0-1-8)
Max Horiz 2=-211 (LC 11)
Max Grav 2=1828 (LC 25), 9=1828 (LC 26)

BRACING

TOP CHORD	Structural wood sheathing directly applied, except 2-0-0 oc purlins (4-8-15 max.): 5-6.
BOT CHORD	Rigid ceiling directly applied or 10-0-0 oc bracing. Except: 6-0-0 oc bracing: 14-18

MiTek recommends that Stabilizers and required cross bracing be installed during truss erection, in accordance with Stabilizer Installation guide.

FORCES (lb) - Max. Comp./Max. Ten. - All forces 250 (lb) or less except when shown.

TOP CHORD 2-27=-2638/0, 3-27=-2457/0, 3-4=-2243/0, 4-28=-2171/0, 5-28=-2135/0, 5-6=-1447/12, 6-29=-2135/0, 7-29=-2171/0, 7-8=-2243/0, 8-30=-2457/0, 9-30=-2639/0

BOT CHORD 2-20=0/2171, 20-31=0/2052, 31-32=0/2052, 19-32=0/2052, 17-19=0/1575, 17-33=0/1575, 33-34=0/1575, 16-34=0/1575, 16-35=0/1575, 35-36=0/1575, 13-36=0/1575, 12-13=0/1575, 12-37=0/1921, 37-38=0/1921, 11-38=0/1921, 9-11=0/2013

WEBS 3-19=-475/197, 18-19=0/960, 5-18=0/1070, 8-12=-475/197, 6-14=0/1070, 12-14=0/960, 15-16=-253/0

NOTES

1) Unbalanced roof live loads have been considered for this design.
2) Wind: ASCE 7-16; Vult=130mph (3-second gust) Vasd=103mph; TCDL=6.0psf; BCDL=6.0psf; h=25ft; Cat. II; Exp B; Enclosed; MWFRS (envelope) and C-C Exterior(2E) -0-10-7 to 2-4-3, Interior (1) 2-4-3 to 14-1-3, Exterior(2E) 14-1-3 to 18-0-13, Exterior(2R) 18-0-13 to 22-7-7, Interior (1) 22-7-7 to 33-0-7 zone;C-C for members and forces & MWFRS for reactions shown; Lumber DOL=1.60 plate grip DOL=1.33
3) TCLL: ASCE 7-16; Pr=20.0 psf (roof LL: Lum DOL=1.15 Plate DOL=1.15); Pg=20.0 psf; Pf=18.9 psf (Lum DOL=1.15 Plate DOL=1.15); Is=1.0; Rough Cat B; Fully Exp.; Ce=0.9; Cs=1.00; Ct=1.10, Lu=50-0-0; Min. flat roof snow load governs. Rain surcharge applied to all exposed surfaces with slopes less than 0.500/12 in accordance with IBC 1608.3.4.
4) This truss has been designed for greater of min roof live load of 12.0 psf or 2.00 times flat roof load of 13.9 psf on overhangs non-concurrent with other live loads.
5) 200.0lb AC unit load placed on the bottom chord, 16-1-0 from left end, supported at two points, 5-0-0 apart.
6) Provide adequate drainage to prevent water ponding.
7) * This truss has been designed for a live load of 20.0psf on the bottom chord in all areas where a rectangle 3-06-00 tall by 2-00-00 wide will fit between the bottom chord and any other members, with BCDL = 10.0psf.
8) This truss is designed in accordance with the 2018 International Residential Code sections R502.11.1 and R802.10.2 and referenced standard ANSI/TPI 1.
9) Graphical purlin representation does not depict the size or the orientation of the purlin along the top and/or bottom chord.

LOAD CASE(S) Standard

Job	Truss	Truss Type	Qty	Ply	Sloan-Roof - Bonus
21030004-C	B04	Piggyback Base	4	1	Job Reference (optional)

ID:Fk1J31COqD?N0GEwgJtu5WyXU1X-nzWwigThYIXtUf2FEnXwfljG7Mz8W160yANvzPz8fY6

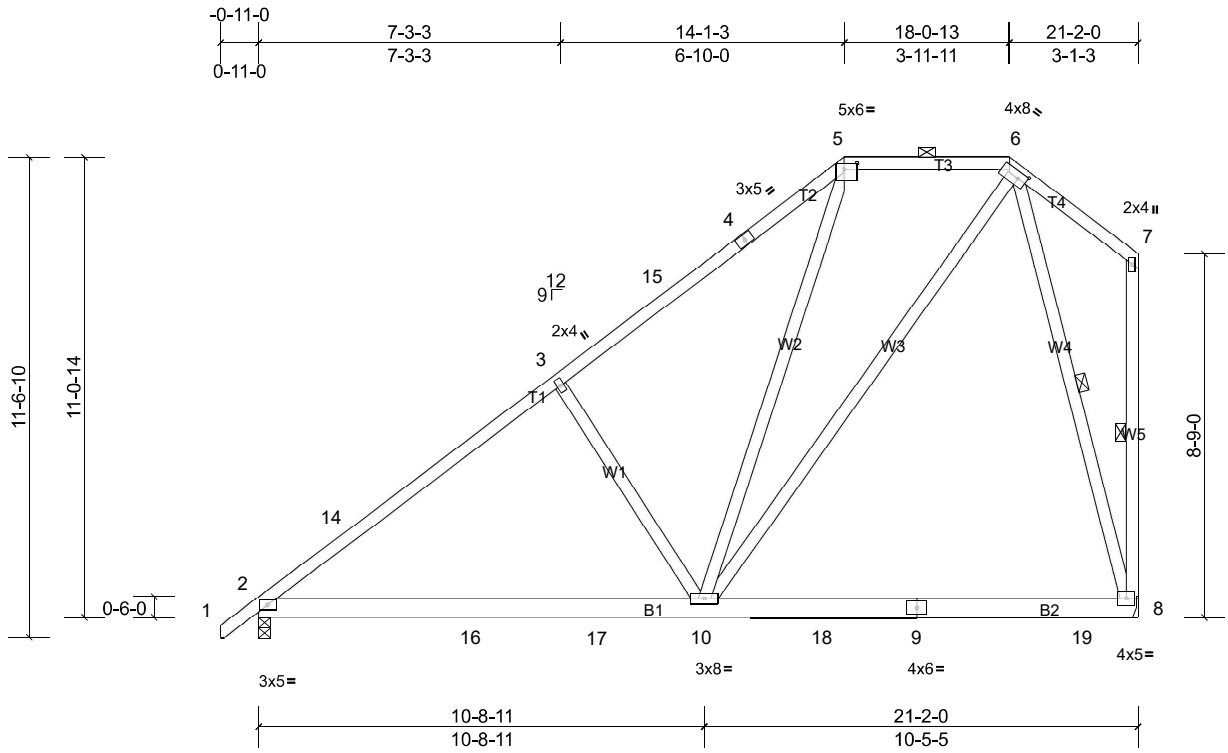

Scale = 1:55.5

Plate Offsets (X, Y): [5:0-3-12,0-1-12], [6:0-2-8,0-2-0]

Loading	(psf)	Spacing	2-0-0	CSI		DEFL	in	(loc)	l/defl	L/d	PLATES	GRIP
TCLL (roof)	20.0	Plate Grip DOL	1.15	TC	0.65	Vert(LL)	-0.15	8-10	>999	240	MT20	244/190
Snow (Pf/Pg)	18.9/20.0	Lumber DOL	1.15	BC	0.69	Vert(CT)	-0.23	8-10	>999	180		
TCDL	10.0	Rep Stress Incr	YES	WB	0.41	Horz(CT)	0.01	8	n/a	n/a		
BCLL	0.0*	Code	IRC2018/TPI2014	Matrix-MSH								
BCDL	10.0										Weight: 161 lb	FT = 20%

LUMBER

TOP CHORD	2x4 SP No.2
BOT CHORD	2x6 SP No.2
WEBS	2x4 SP No.2 *Except* W5,W1:2x4 SP No.3

REACTIONS (lb/size) 2=763/0-3-8, (min. 0-1-8), 8=741/ Mechanical, (min. 0-1-8)
Max Horiz 2=248 (LC 13)
Max Uplift 8=-14 (LC 13)
Max Grav 2=1032 (LC 25), 8=1002 (LC 25)

BRACING

TOP CHORD	Structural wood sheathing directly applied or 5-0-4 oc purlins, except end verticals, and 2-0-0 oc purlins (6-0-0 max.): 5-6.
BOT CHORD	Rigid ceiling directly applied or 10-0-0 oc bracing.
WEBS	1 Row at midpt 7-8, 6-8

MiTek recommends that Stabilizers and required cross bracing be installed during truss erection, in accordance with Stabilizer Installation guide.

FORCES (lb) - Max. Comp./Max. Ten. - All forces 250 (lb) or less except when shown.
TOP CHORD 2-14=-1173/0, 3-14=-1063/32, 3-15=-1002/66, 4-15=-881/75, 4-5=-866/97, 5-6=-639/164
BOT CHORD 2-16=-171/954, 16-17=-171/954, 10-17=-171/954
WEBS 6-8=-776/134, 5-10=0/324, 3-10=-407/182, 6-10=-114/766

NOTES

1) Unbalanced roof live loads have been considered for this design.
2) Wind: ASCE 7-16; Vult=130mph (3-second gust) Vasd=103mph; TCDL=6.0psf; BCDL=6.0psf; h=25ft; Cat. II; Exp B; Enclosed; MWFRS (envelope) and C-C Exterior(2E) -0-10-7 to 2-1-9, Interior (1) 2-1-9 to 14-1-3, Exterior(2E) 14-1-3 to 21-0-4 zone;C-C for members and forces & MWFRS for reactions shown; Lumber DOL=1.60 plate grip DOL=1.33
3) TCLL: ASCE 7-16; Pr=20.0 psf (roof LL: Lum DOL=1.15 Plate DOL=1.15); Pg=20.0 psf; Pf=18.9 psf (Lum DOL=1.15 Plate DOL=1.15); Is=1.0; Rough Cat B; Fully Exp.; Ce=0.9; Cs=1.00; Ct=1.10, Lu=50-0-0; Min. flat roof snow load governs. Rain surcharge applied to all exposed surfaces with slopes less than 0.500/12 in accordance with IBC 1608.3.4.
4) This truss has been designed for greater of min roof live load of 12.0 psf or 2.00 times flat roof load of 13.9 psf on overhangs non-concurrent with other live loads.
5) Provide adequate drainage to prevent water ponding.
6) * This truss has been designed for a live load of 20.0psf on the bottom chord in all areas where a rectangle 3-06-00 tall by 2-00-00 wide will fit between the bottom chord and any other members, with BCDL = 10.0psf.
7) Refer to girder(s) for truss to truss connections.
8) Provide mechanical connection (by others) of truss to bearing plate capable of withstanding 14 lb uplift at joint 8.
9) This truss is designed in accordance with the 2018 International Residential Code sections R502.11.1 and R802.10.2 and referenced standard ANSI/TPI 1.
10) Graphical purlin representation does not depict the size or the orientation of the purlin along the top and/or bottom chord.

LOAD CASE(S) Standard

Job	Truss	Truss Type	Qty	Ply	Sloan-Roof - Bonus
21030004-C	B05	Piggyback Base	4	1	Job Reference (optional)

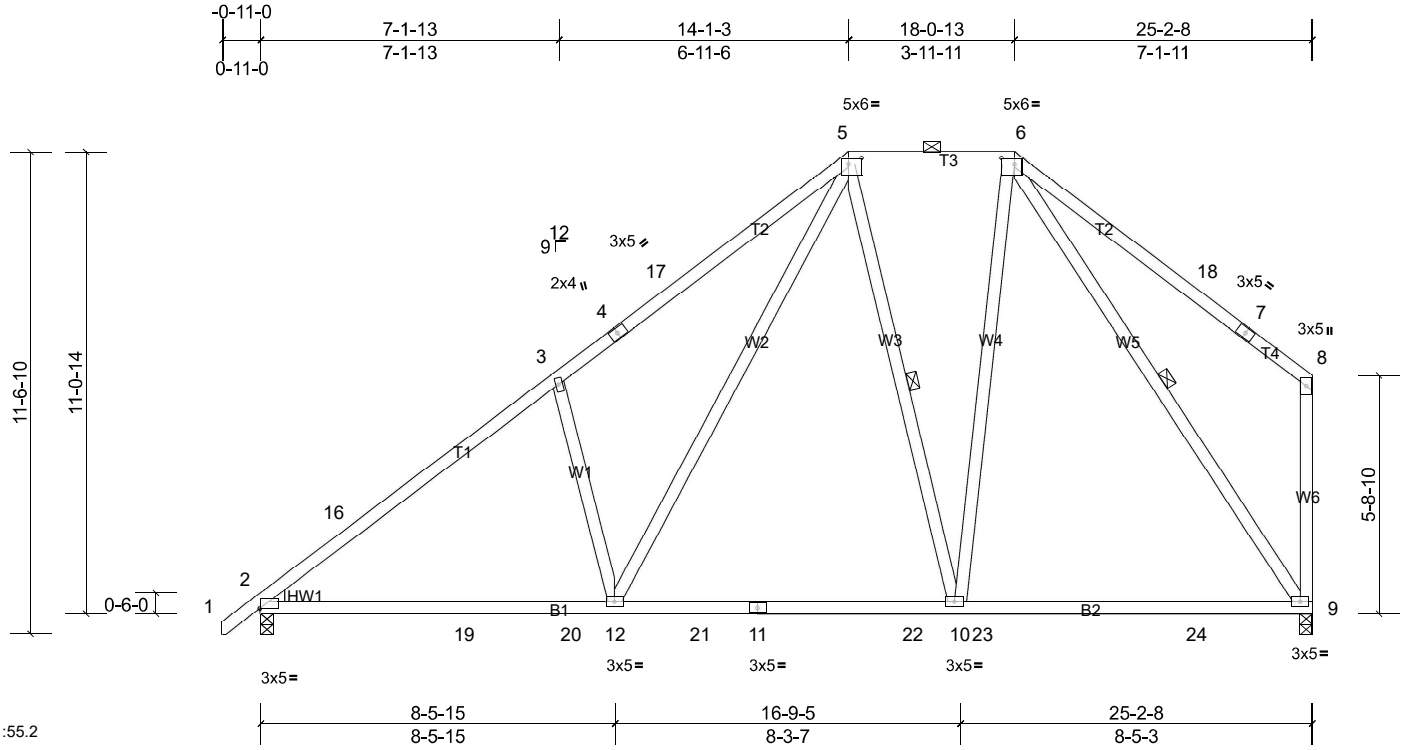

Scale = 1:55.2

Plate Offsets (X, Y): [2:Edge,0-0-1], [5:0-3-12,0-1-12], [6:0-3-12,0-1-12]

Loading	(psf)	Spacing	2-0-0	CSI		DEFL	in	(loc)	l/defl	L/d	PLATES	GRIP
TCLL (roof)	20.0	Plate Grip DOL	1.15	TC	0.70	Vert(LL)	-0.21	9-10	>999	240	MT20	244/190
Snow (Pf/Pg)	18.9/20.0	Lumber DOL	1.15	BC	0.88	Vert(CT)	-0.33	9-10	>901	180		
TCDL	10.0	Rep Stress Incr	YES	WB	0.76	Horz(CT)	0.03	9	n/a	n/a		
BCLL	0.0*	Code	IRC2018/TPI2014	Matrix-MSH								
BCDL	10.0										Weight: 170 lb	FT = 20%

LUMBER

TOP CHORD	2x4 SP No.2
BOT CHORD	2x4 SP No.2
WEBS	2x4 SP No.2 *Except* W1:2x4 SP No.3
WEDGE	Left: 2x4 SP No.3

BRACING

TOP CHORD	Structural wood sheathing directly applied or 4-0-7 oc purlins, except end verticals, and 2-0-0 oc purlins (6-0-0 max.): 5-6.
BOT CHORD	Rigid ceiling directly applied or 10-0-0 oc bracing.
WEBS	1 Row at midpt 6-9, 5-10

REACTIONS (lb/size) 2=905/0-3-8, (min. 0-1-8), 9=873/0-3-8, (min. 0-1-8)
Max Horiz 2=203 (LC 10)
Max Grav 2=1231 (LC 25), 9=1176 (LC 25)

MiTek recommends that Stabilizers and required cross bracing be installed during truss erection, in accordance with Stabilizer Installation guide.

FORCES (lb) - Max. Comp./Max. Ten. - All forces 250 (lb) or less except when shown.

TOP CHORD 2-16=-1527/30, 3-16=-1441/66, 3-4=-1494/141, 4-17=-1412/156, 5-17=-1374/187, 5-6=-641/145, 8-9=-252/110

BOT CHORD 2-19=-198/1253, 19-20=-122/1253, 12-20=-122/1253, 12-21=-36/725, 11-21=-36/725, 11-22=-36/725, 10-22=-36/725, 10-23=-14/590, 23-24=-14/590, 9-24=-14/590

WEBS 6-9=-1023/16, 3-12=-449/189, 5-12=-103/909, 5-10=-274/104, 6-10=0/646

NOTES

1) Unbalanced roof live loads have been considered for this design.
2) Wind: ASCE 7-16; Vult=130mph (3-second gust) Vasd=103mph; TCDL=6.0psf; BCDL=6.0psf; h=25ft; Cat. II; Exp B; Enclosed; MWFRS (envelope) and C-C Exterior(2E) -0-10-7 to 2-1-9, Interior (1) 2-1-9 to 14-1-3, Exterior(2E) 14-1-3 to 18-0-13, Exterior(2R) 18-0-13 to 22-3-12, Interior (1) 22-3-12 to 25-0-12 zone;C-C for members and forces & MWFRS for reactions shown; Lumber DOL=1.60 plate grip DOL=1.33
3) TCLL: ASCE 7-16; Pr=20.0 psf (roof LL: Lum DOL=1.15 Plate DOL=1.15); Pg=20.0 psf; Pf=18.9 psf (Lum DOL=1.15 Plate DOL=1.15); Is=1.0; Rough Cat B; Fully Exp.; Ce=0.9; Cs=1.00; Ct=1.10, Lu=50-0-0; Min. flat roof snow load governs. Rain surcharge applied to all exposed surfaces with slopes less than 0.500/12 in accordance with IBC 1608.3.4.
4) This truss has been designed for greater of min roof live load of 12.0 psf or 2.00 times flat roof load of 13.9 psf on overhangs non-concurrent with other live loads.
5) Provide adequate drainage to prevent water ponding.
6) All plates are 3x5 MT20 unless otherwise indicated.
7) * This truss has been designed for a live load of 20.0psf on the bottom chord in all areas where a rectangle 3-06-00 tall by 2-00-00 wide will fit between the bottom chord and any other members, with BCDL = 10.0psf.
8) This truss is designed in accordance with the 2018 International Residential Code sections R502.11.1 and R802.10.2 and referenced standard ANSI/TPI 1.
9) Graphical purlin representation does not depict the size or the orientation of the purlin along the top and/or bottom chord.

LOAD CASE(S) Standard

Job	Truss	Truss Type	Qty	Ply	Sloan-Roof - Bonus
21030004-C	B05G	Piggyback Base Supported Gable	3	1	Job Reference (optional)

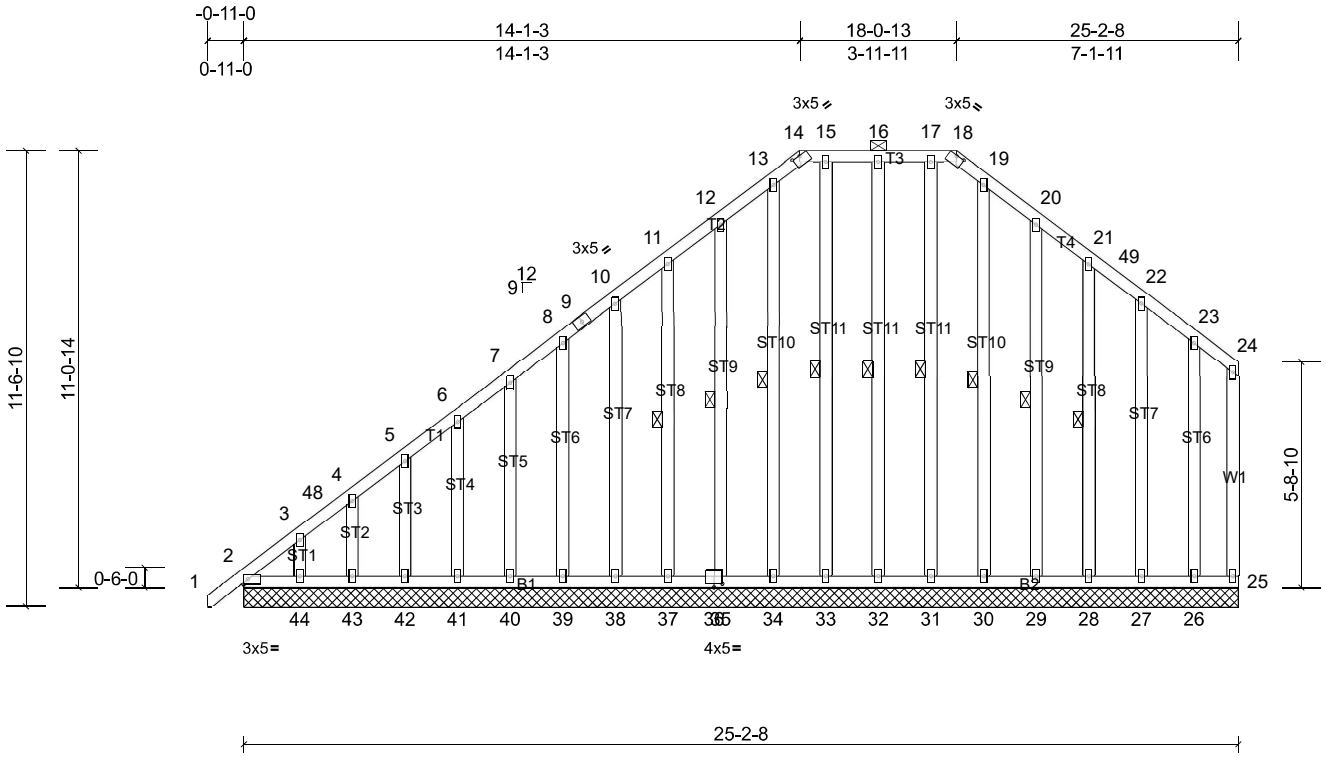

Scale = 1:58.4

Plate Offsets (X, Y): [14:0-2-8,0-0-5], [18:0-2-8,0-0-5], [36:0-2-8,0-1-4]

Loading	(psf)	Spacing	2-0-0	CSI		DEFL	in	(loc)	l/defl	L/d	PLATES	GRIP
TCLL (roof)	20.0	Plate Grip DOL	1.15	TC	0.08	Vert(LL)	n/a	-	n/a	999	MT20	244/190
Snow (Pf/Pg)	18.9/20.0	Lumber DOL	1.15	BC	0.03	Vert(CT)	n/a	-	n/a	999		
TCDL	10.0	Rep Stress Incr	YES	WB	0.08	Horz(CT)	n/a	-	n/a	n/a		
BCLL	0.0 *	Code	IRC2018/TPI2014	Matrix-MSH								
BCDL	10.0										Weight: 281 lb	FT = 20%

LUMBER

TOP CHORD	2x4 SP No.2
BOT CHORD	2x4 SP No.2
WEBS	2x4 SP No.2
OTHERS	2x4 SP No.2 *Except* ST4,ST3,ST2,ST1:2x4 SP No.3

BRACING

TOP CHORD	Structural wood sheathing directly applied or 6-0-0 oc purlins, except end verticals, and 2-0-0 oc purlins (6-0-0 max.): 14-18.
BOT CHORD	Rigid ceiling directly applied or 10-0-0 oc bracing.
WEBS	1 Row at midpt 16-32, 15-33, 13-34, 12-35, 11-37, 17-31, 19-30, 20-29, 21-28

MiTek recommends that Stabilizers and required cross bracing be installed during truss erection, in accordance with Stabilizer Installation guide.

REACTIONS All bearings 25-2-8.
(lb) - Max Horiz 2=203 (LC 10), 45=203 (LC 10)
Max Uplift All uplift 100 (lb) or less at joint(s) 2, 25, 26, 27, 28, 29, 32, 33, 34, 35, 37, 38, 39, 40, 41, 42, 43, 44, 45
Max Grav All reactions 250 (lb) or less at joint(s) 2, 25, 26, 27, 28, 29, 30, 31, 32, 33, 34, 35, 37, 38, 39, 40, 41, 42, 43, 44, 45

FORCES (lb) - Max. Comp./Max. Ten. - All forces 250 (lb) or less except when shown.

NOTES

1) Unbalanced roof live loads have been considered for this design.
2) Wind: ASCE 7-16; Vult=130mph (3-second gust) Vasd=103mph; TCDL=6.0psf; BCDL=6.0psf; h=25ft; Cat. II; Exp B; Enclosed; MWFRS (envelope) and C-C Corner(3E) -0-10-7 to 2-1-9, Exterior(2N) 2-1-9 to 14-1-3, Corner(3R) 14-1-3 to 17-1-3, Exterior(2N) 17-1-3 to 18-0-13, Corner(3R) 18-0-13 to 21-0-13, Exterior(2N) 21-0-13 to 25-0-12 zone;C-C for members and forces & MWFRS for reactions shown; Lumber DOL=1.60 plate grip DOL=1.33
3) Truss designed for wind loads in the plane of the truss only. For studs exposed to wind (normal to the face), see Standard Industry Gable End Details as applicable, or consult qualified building designer as per ANSI/TPI 1.
4) TCLL: ASCE 7-16; Pr=20.0 psf (roof LL: Lum DOL=1.15 Plate DOL=1.15); Pg=20.0 psf; Pf=18.9 psf (Lum DOL=1.15 Plate DOL=1.15); Is=1.0; Rough Cat B; Fully Exp.; Ce=0.9; Cs=1.00; Ct=1.10, Lu=50-0-0; Min. flat roof snow load governs. Rain surcharge applied to all exposed surfaces with slopes less than 0.500/12 in accordance with IBC 1608.3.4.
5) This truss has been designed for greater of min roof live load of 12.0 psf or 2.00 times flat roof load of 13.9 psf on overhangs non-concurrent with other live loads.
6) Provide adequate drainage to prevent water ponding.
7) All plates are 2x4 MT20 unless otherwise indicated.
8) Gable requires continuous bottom chord bearing.
9) Gable studs spaced at 1-4-0 oc.
10) * This truss has been designed for a live load of 20.0psf on the bottom chord in all areas where a rectangle 3-06-00 tall by 2-00-00 wide will fit between the bottom chord and any other members.
11) One RT7A MiTek connectors recommended to connect truss to bearing walls due to UPLIFT at jt(s) 2, 25, 32, 33, 34, 35, 37, 38, 39, 40, 41, 42, 43, 44, 29, 28, 27, and 26. This connection is for uplift only and does not consider lateral forces.
12) This truss is designed in accordance with the 2018 International Residential Code sections R502.11.1 and R802.10.2 and referenced standard ANSI/TPI 1.
13) Graphical purlin representation does not depict the size or the orientation of the purlin along the top and/or bottom chord.

LOAD CASE(S) Standard

Job	Truss	Truss Type	Qty	Ply	Sloan-Roof - Bonus
21030004-C	C01	Attic	6	1	Job Reference (optional)

ID:eaJuLNzTanBFp3VhO8yqC6yXTyg-F94Iv0UJIbgk5pcSnU29CyGNzlORFVgAAq7SVrz8fY5

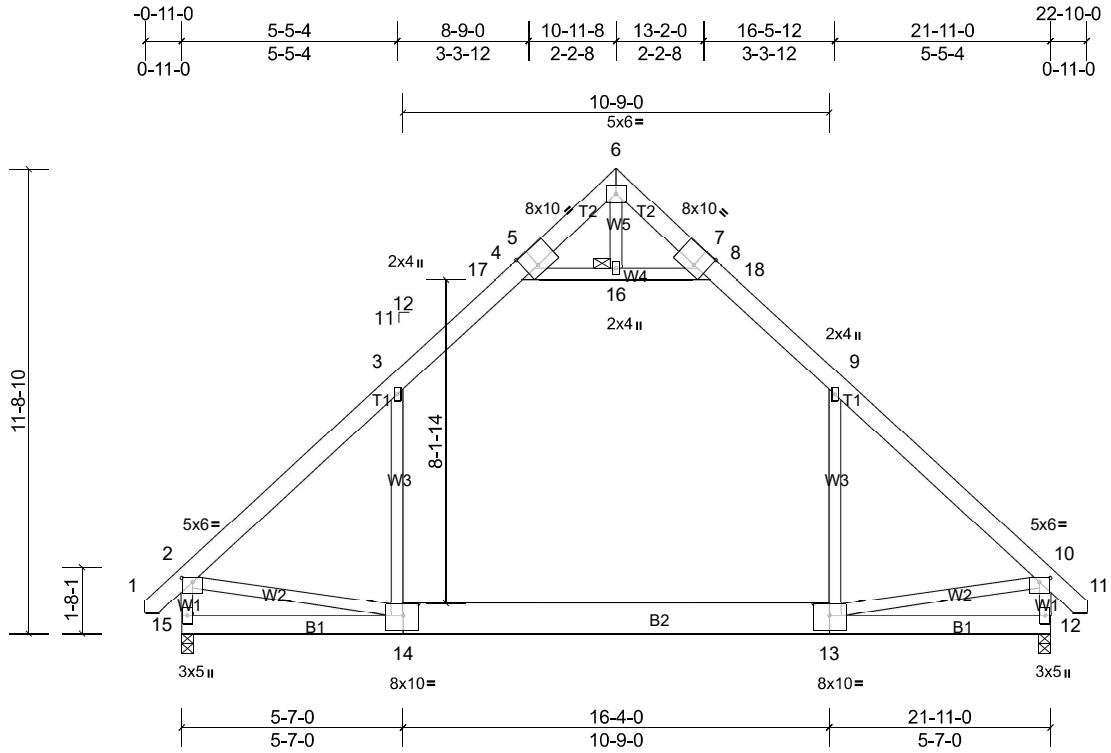

Scale = 1:58.1

Plate Offsets (X, Y): [2:0-3-4,0-1-4], [5:0-3-13,Edge], [7:0-3-13,Edge], [10:0-3-4,0-1-4], [13:0-4-12,0-3-8], [14:0-4-12,0-3-8]

Loading	(psf)	Spacing	2-0-0	CSI		DEFL	in	(loc)	l/defl	L/d	PLATES	GRIP
TCLL (roof)	20.0	Plate Grip DOL	1.15	TC	0.90	Vert(LL)	-0.24	13-14	>999	240	MT20	244/190
Snow (Pf/Pg)	13.9/20.0	Lumber DOL	1.15	BC	0.37	Vert(CT)	-0.37	13-14	>704	180		
TCDL	10.0	Rep Stress Incr	YES	WB	0.26	Horz(CT)	0.01	12	n/a	n/a		
BCLL	0.0*	Code	IRC2018/TPI2014	Matrix-MSH		Attic	-0.11	13-14	>999	360		
BCDL	10.0										Weight: 189 lb	FT = 20%

LUMBER

TOP CHORD	2x6 SP No.2
BOT CHORD	2x6 SP No.2 *Except* B2:2x10 SP 2400F 2.0E
WEBS	2x4 SP No.3 *Except* W4:2x4 SP No.2

REACTIONS (lb/size) 12=891/0-3-8, (min. 0-1-8), 15=891/0-3-8, (min. 0-1-8)
Max Horiz 15=201 (LC 12)
Max Grav 12=1258 (LC 27), 15=1258 (LC 26)

BRACING

TOP CHORD	Structural wood sheathing directly applied or 2-2-0 oc purlins, except end verticals.
BOT CHORD	Rigid ceiling directly applied or 10-0-0 oc bracing.
JOINTS	1 Brace at Jt(s): 16

MiTek recommends that Stabilizers and required cross bracing be installed during truss erection, in accordance with Stabilizer Installation guide.

FORCES (lb) - Max. Comp./Max. Ten. - All forces 250 (lb) or less except when shown.

TOP CHORD	2-3=-1320/0, 3-17=-843/110, 4-17=-733/116, 8-18=-733/116, 9-18=-843/110, 9-10=-1320/0, 2-15=-1222/23, 10-12=-1223/23
BOT CHORD	14-15=-206/422, 13-14=0/862, 12-13=-41/274
WEBS	9-13=-11/541, 3-14=-11/541, 4-16=-1128/165, 8-16=-1128/165, 2-14=0/680, 10-13=0/683

NOTES

1) Unbalanced roof live loads have been considered for this design.
2) Wind: ASCE 7-16; Vult=130mph (3-second gust) Vasd=103mph; TCDL=6.0psf; BCDL=6.0psf; h=25ft; Cat. II; Exp B; Enclosed; MWFRS (envelope) and C-C Exterior(2E) -0-8-13 to 2-3-3, Interior (1) 2-3-3 to 10-11-8, Exterior(2R) 10-11-8 to 13-11-8, Interior (1) 13-11-8 to 22-7-13 zone;C-C for members and forces & MWFRS for reactions shown; Lumber DOL=1.60 plate grip DOL=1.33
3) TCLL: ASCE 7-16; Pr=20.0 psf (roof LL: Lum DOL=1.15 Plate DOL=1.15); Pg=20.0 psf; Pf=13.9 psf (Lum DOL=1.15 Plate DOL=1.15); Is=1.0; Rough Cat B; Fully Exp.; Ce=0.9; Cs=1.00; Ct=1.10
4) This truss has been designed for greater of min roof live load of 12.0 psf or 2.00 times flat roof load of 13.9 psf on overhangs non-concurrent with other live loads.
5) * This truss has been designed for a live load of 20.0psf on the bottom chord in all areas where a rectangle 3-06-00 tall by 2-00-00 wide will fit between the bottom chord and any other members.
6) Ceiling dead load (5.0 psf) on member(s). 3-4, 8-9, 4-16, 8-16; Wall dead load (5.0psf) on member(s).9-13, 3-14
7) Bottom chord live load (40.0 psf) and additional bottom chord dead load (0.0 psf) applied only to room. 13-14
8) This truss is designed in accordance with the 2018 International Residential Code sections R502.11.1 and R802.10.2 and referenced standard ANSI/TPI 1.
9) Attic room checked for L/360 deflection.

LOAD CASE(S) Standard

Job	Truss	Truss Type	Qty	Ply	Sloan-Roof - Bonus
21030004-C	C01G	Attic Supported Gable	1	1	Job Reference (optional)

ID:LNifU_2wgq5fCbcP_LVJDgyXTs6-jMdg7MVy3vobjzBeLBaOkAol19l2_zsJPUs01Hz8fY4

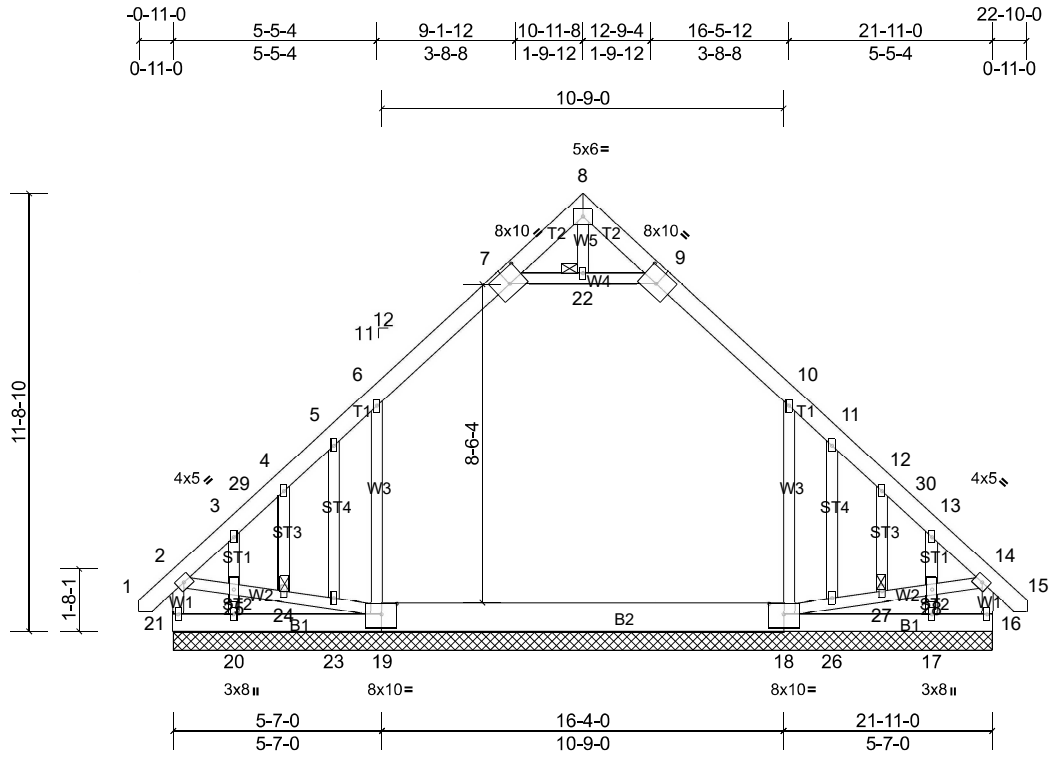

Scale = 1:61.7

Plate Offsets (X, Y): [7:0-5-0,0-4-8], [9:0-5-0,0-4-8], [18:0-4-12,0-3-8], [19:0-4-12,0-3-8]

Loading	(psf)	Spacing	2-0-0	CSI		DEFL	in	(loc)	l/defl	L/d	PLATES	GRIP
TCLL (roof)	20.0	Plate Grip DOL	1.15	TC	0.11	Vert(LL)	n/a	-	n/a	999	MT20	244/190
Snow (Pf/Pg)	13.9/20.0	Lumber DOL	1.15	BC	0.28	Vert(CT)	n/a	-	n/a	999		
TCDL	10.0	Rep Stress Incr	YES	WB	0.20	Horz(CT)	0.00	16	n/a	n/a		
BCLL	0.0 *	Code	IRC2018/TPI2014	Matrix-MSH								
BCDL	10.0										Weight: 214 lb	FT = 20%

LUMBER

TOP CHORD	2x6 SP No.2
BOT CHORD	2x6 SP No.2 *Except* B2:2x10 SP 2400F 2.0E
WEBS	2x4 SP No.3 *Except* W4:2x4 SP No.2
OTHERS	2x4 SP No.3

BRACING

TOP CHORD	Structural wood sheathing directly applied or 6-0-0 oc purlins, except end verticals.
BOT CHORD	Rigid ceiling directly applied or 10-0-0 oc bracing.
JOINTS	1 Brace at Jt(s): 22, 24, 27

MiTek recommends that Stabilizers and required cross bracing be installed during truss erection, in accordance with Stabilizer Installation guide.

REACTIONS All bearings 21-11-0.
(lb) - Max Horiz 21=201 (LC 12)
Max Uplift All uplift 100 (lb) or less at joint(s) 16, 17, 18, 19, 20, 21
Max Grav All reactions 250 (lb) or less at joint(s) 17, 20 except 16=399 (LC 26), 18=669 (LC 27), 19=669 (LC 26), 21=404 (LC 27)

FORCES (lb) - Max. Comp./Max. Ten. - All forces 250 (lb) or less except when shown.

TOP CHORD 2-21=-338/22, 2-3=-362/45, 3-29=-392/32, 4-29=-352/36, 4-5=-351/46, 5-6=-284/57, 6-7=-390/156, 9-10=-390/155, 10-11=-282/55, 11-12=-350/45, 12-30=-351/35, 13-30=-392/31, 13-14=-359/41, 14-16=-337/19

BOT CHORD 18-19=-28/260

WEBS 10-18=-296/168, 18-26=-26/254, 6-19=-298/167

NOTES

1) Unbalanced roof live loads have been considered for this design.
2) Wind: ASCE 7-16; Vult=130mph (3-second gust) Vasd=103mph; TCDL=6.0psf; BCDL=6.0psf; h=25ft; Cat. II; Exp B; Enclosed; MWFRS (envelope) and C-C Corner(3E) -0-8-13 to 2-3-3, Exterior(2N) 2-3-3 to 10-11-8, Corner(3R) 10-11-8 to 13-11-8, Exterior(2N) 13-11-8 to 22-7-13 zone;C-C for members and forces & MWFRS for reactions shown; Lumber DOL=1.60 plate grip DOL=1.33
3) Truss designed for wind loads in the plane of the truss only. For studs exposed to wind (normal to the face), see Standard Industry Gable End Details as applicable, or consult qualified building designer as per ANSI/TPI 1.
4) TCLL: ASCE 7-16; Pr=20.0 psf (roof LL: Lum DOL=1.15 Plate DOL=1.15); Pg=20.0 psf; Pf=13.9 psf (Lum DOL=1.15 Plate DOL=1.15); Is=1.0; Rough Cat B; Fully Exp.; Ce=0.9; Cs=1.00; Ct=1.10
5) This truss has been designed for greater of min roof live load of 12.0 psf or 2.00 times flat roof load of 13.9 psf on overhangs non-concurrent with other live loads.
6) All plates are 2x4 MT20 unless otherwise indicated.
7) Gable requires continuous bottom chord bearing.
8) Truss to be fully sheathed from one face or securely braced against lateral movement (i.e. diagonal web).
9) Gable studs spaced at 1-4-0 oc.
10) * This truss has been designed for a live load of 20.0psf on the bottom chord in all areas where a rectangle 3-06-00 tall by 2-00-00 wide will fit between the bottom chord and any other members, with BCDL = 10.0psf.
11) One RT7A MiTek connectors recommended to connect truss to bearing walls due to UPLIFT at jt(s) 21, 16, 19, 18, 20, and 17. This connection is for uplift only and does not consider lateral forces.
12) This truss is designed in accordance with the 2018 International Residential Code sections R502.11.1 and R802.10.2 and referenced standard ANSI/TPI 1.
13) Attic room checked for L/360 deflection.

LOAD CASE(S) Standard

Job	Truss	Truss Type	Qty	Ply	Sloan-Roof - Bonus
21030004-C	C02	Attic	1	1	Job Reference (optional)

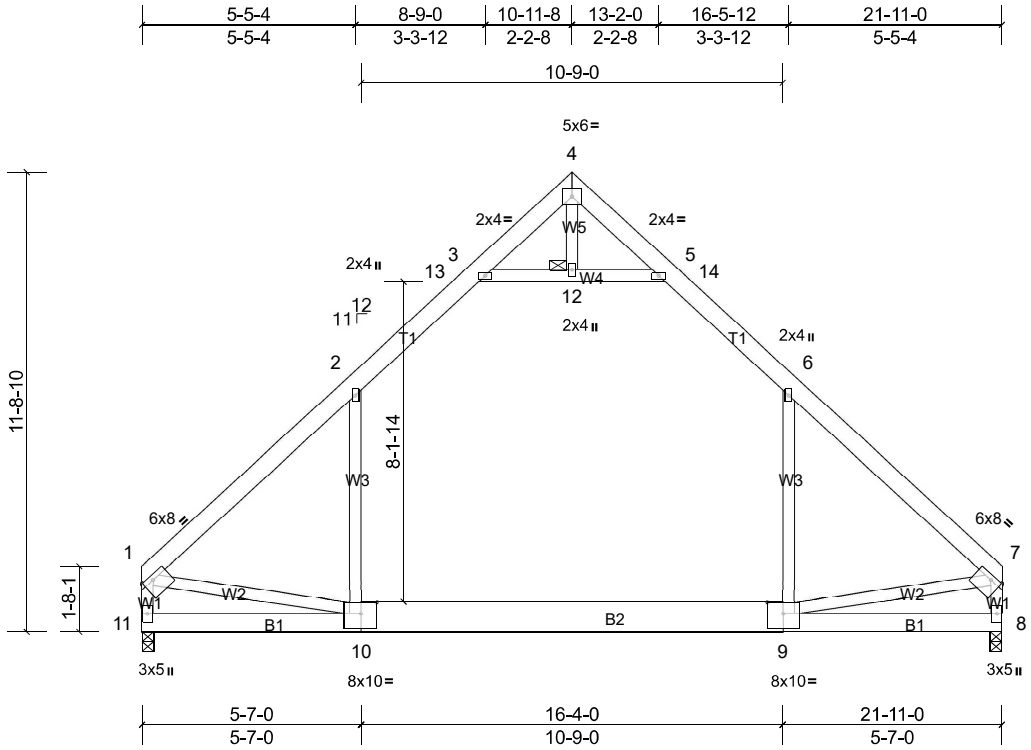

Scale = 1:58.7

Plate Offsets (X, Y): [1:0-3-4,0-1-8], [7:0-3-4,0-1-8], [9:0-4-12,0-3-8], [10:0-4-12,0-3-8]

Loading	(psf)	Spacing	2-0-0	CSI		DEFL	in	(loc)	l/defl	L/d	PLATES	GRIP
TCLL (roof)	20.0	Plate Grip DOL	1.15	TC	0.96	Vert(LL)	-0.25	9-10	>999	240	MT20	244/190
Snow (Pf/Pg)	13.9/20.0	Lumber DOL	1.15	BC	0.37	Vert(CT)	-0.37	9-10	>696	180		
TCDL	10.0	Rep Stress Incr	YES	WB	0.26	Horz(CT)	0.01	8	n/a	n/a		
BCLL	0.0*	Code	IRC2018/TPI2014	Matrix-MSH		Attic	-0.11	9-10	>999	360		
BCDL	10.0										Weight: 184 lb	FT = 20%

LUMBER

TOP CHORD	2x6 SP No.2
BOT CHORD	2x6 SP No.2 *Except* B2:2x10 SP 2400F 2.0E
WEBS	2x4 SP No.3 *Except* W4:2x4 SP No.2

BRACING

TOP CHORD	Structural wood sheathing directly applied, except end verticals.
BOT CHORD	Rigid ceiling directly applied or 10-0-0 oc bracing.
JOINTS	1 Brace at Jt(s): 12

MiTek recommends that Stabilizers and required cross bracing be installed during truss erection, in accordance with Stabilizer Installation guide.

REACTIONS (lb/size) 8=849/0-3-8, (min. 0-1-8), 11=849/0-3-8, (min. 0-1-8)
Max Horiz 11=-186 (LC 9)
Max Grav 8=1215 (LC 25), 11=1215 (LC 26)

FORCES (lb) - Max. Comp./Max. Ten. - All forces 250 (lb) or less except when shown.

TOP CHORD 1-2=-1317/0, 2-13=-845/109, 3-13=-735/115, 3-4=-18/254, 4-5=-18/254, 5-14=-735/115, 6-14=-845/109, 6-7=-1317/0, 1-11=-1187/0, 7-8=-1187/0

BOT CHORD 10-11=-205/364, 9-10=0/858

WEBS 6-9=-20/531, 2-10=-20/531, 3-12=-1139/163, 5-12=-1139/163, 1-10=0/716, 7-9=0/719

NOTES

1) Unbalanced roof live loads have been considered for this design.
2) Wind: ASCE 7-16; Vult=130mph (3-second gust) Vasd=103mph; TCDL=6.0psf; BCDL=6.0psf; h=25ft; Cat. II; Exp B; Enclosed; MWFRS (envelope) and C-C Exterior(2E) 0-1-12 to 3-1-12, Interior (1) 3-1-12 to 10-11-8, Exterior(2R) 10-11-8 to 13-11-8, Interior (1) 13-11-8 to 21-9-4 zone;C-C for members and forces & MWFRS for reactions shown; Lumber DOL=1.60 plate grip DOL=1.33
3) TCLL: ASCE 7-16; Pr=20.0 psf (roof LL: Lum DOL=1.15 Plate DOL=1.15); Pg=20.0 psf; Pf=13.9 psf (Lum DOL=1.15 Plate DOL=1.15); Is=1.0; Rough Cat B; Fully Exp.; Ce=0.9; Cs=1.00; Ct=1.10
4) * This truss has been designed for a live load of 20.0psf on the bottom chord in all areas where a rectangle 3-06-00 tall by 2-00-00 wide will fit between the bottom chord and any other members.
5) Ceiling dead load (5.0 psf) on member(s). 2-3, 5-6, 3-12, 5-12; Wall dead load (5.0psf) on member(s).6-9, 2-10
6) Bottom chord live load (40.0 psf) and additional bottom chord dead load (0.0 psf) applied only to room. 9-10
7) This truss is designed in accordance with the 2018 International Residential Code sections R502.11.1 and R802.10.2 and referenced standard ANSI/TPI 1.
8) Attic room checked for L/360 deflection.

LOAD CASE(S) Standard

Job	Truss	Truss Type	Qty	Ply	Sloan-Roof - Bonus
21030004-C	C02G	Attic Girder	1	**2**	Job Reference (optional)

ID:TGk?k2SZ93DadCZNkXgCqYyXTy2-BYB2KiWaqDwSL6mqvv5dHNLp9Z7njR3Te8cZZjz8fY3

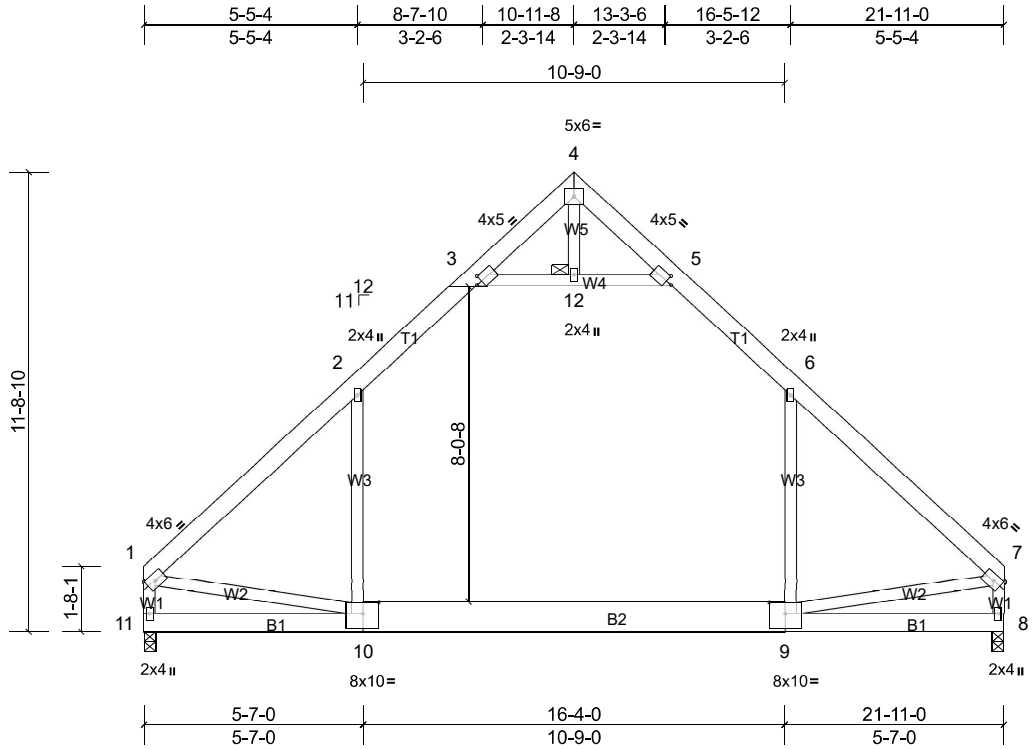

Scale = 1:58.7

Plate Offsets (X, Y): [3:0-1-14,0-2-0], [5:0-1-14,0-2-0], [9:0-4-12,0-3-8], [10:0-4-12,0-3-8]

Loading	(psf)	**Spacing**	2-0-0	**CSI**		**DEFL**	in	(loc)	l/defl	L/d	**PLATES**	**GRIP**
TCLL (roof)	20.0	Plate Grip DOL	1.15	TC	0.54	Vert(LL)	-0.12	9-10	>999	240	MT20	244/190
Snow (Pf/Pg)	13.9/20.0	Lumber DOL	1.15	BC	0.18	Vert(CT)	-0.19	9-10	>999	180		
TCDL	10.0	Rep Stress Incr	NO	WB	0.14	Horz(CT)	0.00	8	n/a	n/a		
BCLL	0.0 *	Code	IRC2018/TPI2014	Matrix-MSH		Attic	-0.06	9-10	>999	360		
BCDL	10.0										Weight: 369 lb	FT = 20%

LUMBER

TOP CHORD	2x6 SP No.2
BOT CHORD	2x6 SP No.2 *Except* B2:2x10 SP 2400F 2.0E
WEBS	2x4 SP No.3 *Except* W4:2x4 SP No.2

BRACING

TOP CHORD	Structural wood sheathing directly applied or 6-0-0 oc purlins, except end verticals.
BOT CHORD	Rigid ceiling directly applied or 10-0-0 oc bracing.
JOINTS	1 Brace at Jt(s): 12

REACTIONS (lb/size) 8=897/0-3-8, (min. 0-1-8), 11=897/0-3-8, (min. 0-1-8)
Max Horiz 11=-186 (LC 5)
Max Grav 8=1262 (LC 21), 11=1262 (LC 22)

FORCES (lb) - Max. Comp./Max. Ten. - All forces 250 (lb) or less except when shown.

TOP CHORD	1-2=-1384/0, 2-3=-921/14, 5-6=-921/14, 6-7=-1384/0, 1-11=-1243/0, 7-8=-1244/0
BOT CHORD	10-11=-212/357, 9-10=0/910
WEBS	6-9=0/525, 2-10=0/525, 3-12=-1134/35, 5-12=-1134/35, 1-10=0/776, 7-9=0/779

NOTES

1) 2-ply truss to be connected together with 10d (0.131"x3") nails as follows:
Top chords connected as follows: 2x6 - 2 rows staggered at 0-9-0 oc, 2x4 - 1 row at 0-9-0 oc.
Bottom chords connected as follows: 2x6 - 2 rows staggered at 0-9-0 oc, 2x10 - 2 rows staggered at 0-9-0 oc.
Web connected as follows: 2x4 - 1 row at 0-9-0 oc.
2) All loads are considered equally applied to all plies, except if noted as front (F) or back (B) face in the LOAD CASE(S) section. Ply to ply connections have been provided to distribute only loads noted as (F) or (B), unless otherwise indicated.
3) Unbalanced roof live loads have been considered for this design.
4) Wind: ASCE 7-16; Vult=130mph (3-second gust) Vasd=103mph; TCDL=6.0psf; BCDL=6.0psf; h=25ft; Cat. II; Exp B; Enclosed; MWFRS (envelope); Lumber DOL=1.60 plate grip DOL=1.33
5) TCLL: ASCE 7-16; Pr=20.0 psf (roof LL: Lum DOL=1.15 Plate DOL=1.15); Pg=20.0 psf; Pf=13.9 psf (Lum DOL=1.15 Plate DOL=1.15); Is=1.0; Rough Cat B; Fully Exp.; Ce=0.9; Cs=1.00; Ct=1.10
6) * This truss has been designed for a live load of 20.0psf on the bottom chord in all areas where a rectangle 3-06-00 tall by 2-00-00 wide will fit between the bottom chord and any other members.
7) Ceiling dead load (10.0 psf) on member(s). 2-3, 5-6, 3-12, 5-12
8) Bottom chord live load (40.0 psf) and additional bottom chord dead load (5.0 psf) applied only to room. 9-10
9) This truss is designed in accordance with the 2018 International Residential Code sections R502.11.1 and R802.10.2 and referenced standard ANSI/TPI 1.
10) Attic room checked for L/360 deflection.

LOAD CASE(S) Standard

Job	Truss	Truss Type	Qty	Ply	Sloan-Roof - Bonus
21030004-C	C03	Attic	2	1	Job Reference (optional)

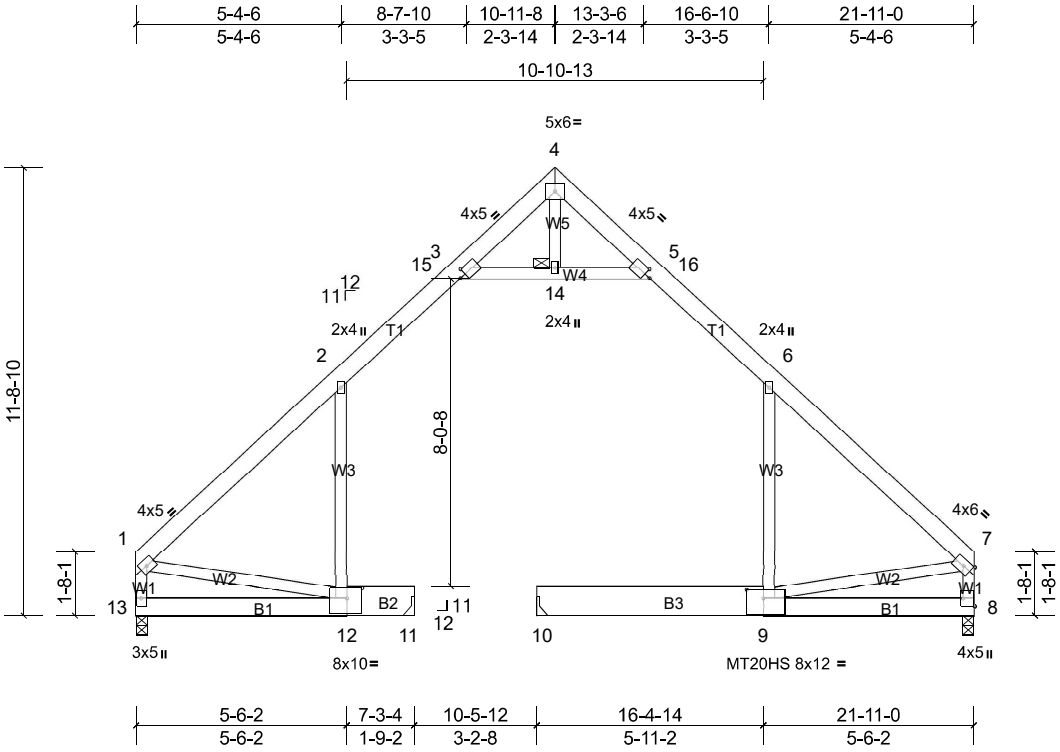

Scale = 1:60.3

5-6-2	7-3-4	10-5-12	16-4-14	21-11-0
5-6-2	1-9-2	3-2-8	5-11-2	5-6-2

Plate Offsets (X, Y): [3:0-1-14,0-2-0], [5:0-1-14,0-2-0], [8:Edge,0-3-8], [9:0-5-4,0-2-12], [12:0-4-12,0-3-4]

Loading	(psf)	**Spacing**	2-0-0	**CSI**		**DEFL**	in	(loc)	l/defl	L/d	**PLATES**	**GRIP**
TCLL (roof)	20.0	Plate Grip DOL	1.15	TC	0.77	Vert(LL)	-0.22	8-9	>607	240	MT20	244/190
Snow (Pf/Pg)	13.9/20.0	Lumber DOL	1.15	BC	0.76	Vert(CT)	-0.41	8-9	>324	180	MT20HS	187/143
TCDL	10.0	Rep Stress Incr	YES	WB	0.44	Horz(CT)	0.90	10	n/a	n/a		
BCLL	0.0 *	Code	IRC2018/TPI2014	Matrix-MSH								
BCDL	10.0										Weight: 172 lb	FT = 20%

LUMBER

TOP CHORD	2x6 SP No.2
BOT CHORD	2x6 SP 2400F 2.0E *Except* B2,B3:2x10 SP 2400F 2.0E
WEBS	2x4 SP No.3 *Except* W4:2x4 SP No.2

REACTIONS All bearings 0-3-8. except 11= Mechanical, 10= Mechanical
(lb) - Max Horiz 13=-186 (LC 9)
Max Uplift All uplift 100 (lb) or less at joint(s) 8, 11 except 13=-110 (LC 14)
Max Grav All reactions 250 (lb) or less at joint(s) except 8=504 (LC 2), 10=333 (LC 2), 11=611 (LC 25), 13=362 (LC 26)

BRACING

TOP CHORD	Structural wood sheathing directly applied or 6-0-0 oc purlins, except end verticals.
BOT CHORD	Rigid ceiling directly applied or 10-0-0 oc bracing, Except: 8-6-8 oc bracing: 8-9.
JOINTS	1 Brace at Jt(s): 14

MiTek recommends that Stabilizers and required cross bracing be installed during truss erection, in accordance with Stabilizer Installation guide.

FORCES (lb) - Max. Comp./Max. Ten. - All forces 250 (lb) or less except when shown.

TOP CHORD	1-2=-260/294, 2-15=-295/205, 3-4=-366/0, 4-5=-327/42
BOT CHORD	12-13=-199/255
WEBS	2-12=-675/135, 6-9=-448/67, 3-14=-76/406, 5-14=-76/406, 1-12=-251/201

NOTES

1) Unbalanced roof live loads have been considered for this design.
2) Wind: ASCE 7-16; Vult=130mph (3-second gust) Vasd=103mph; TCDL=6.0psf; BCDL=6.0psf; h=25ft; Cat. II; Exp B; Enclosed; MWFRS (envelope) and C-C Exterior(2E) 0-1-12 to 3-1-12, Interior (1) 3-1-12 to 10-11-8, Exterior(2R) 10-11-8 to 13-11-8, Interior (1) 13-11-8 to 21-9-4 zone;C-C for members and forces & MWFRS for reactions shown; Lumber DOL=1.60 plate grip DOL=1.33
3) TCLL: ASCE 7-16; Pr=20.0 psf (roof LL: Lum DOL=1.15 Plate DOL=1.15); Pg=20.0 psf; Pf=13.9 psf (Lum DOL=1.15 Plate DOL=1.15); Is=1.0; Rough Cat B; Fully Exp.; Ce=0.9; Cs=1.00; Ct=1.10
4) All plates are MT20 plates unless otherwise indicated.
5) * This truss has been designed for a live load of 20.0psf on the bottom chord in all areas where a rectangle 3-06-00 tall by 2-00-00 wide will fit between the bottom chord and any other members.
6) Refer to girder(s) for truss to truss connections.
7) Provide mechanical connection (by others) of truss to bearing plate capable of withstanding 100 lb uplift at joint(s) 11.
8) One RT7A MiTek connectors recommended to connect truss to bearing walls due to UPLIFT at jt(s) 13 and 8. This connection is for uplift only and does not consider lateral forces.
9) This truss is designed in accordance with the 2018 International Residential Code sections R502.11.1 and R802.10.2 and referenced standard ANSI/TPI 1.
10) Attic room checked for L/360 deflection.

LOAD CASE(S) Standard

Job	Truss	Truss Type	Qty	Ply	Sloan-Roof - Bonus
21030004-C	D01	Common	2	1	Job Reference (optional)

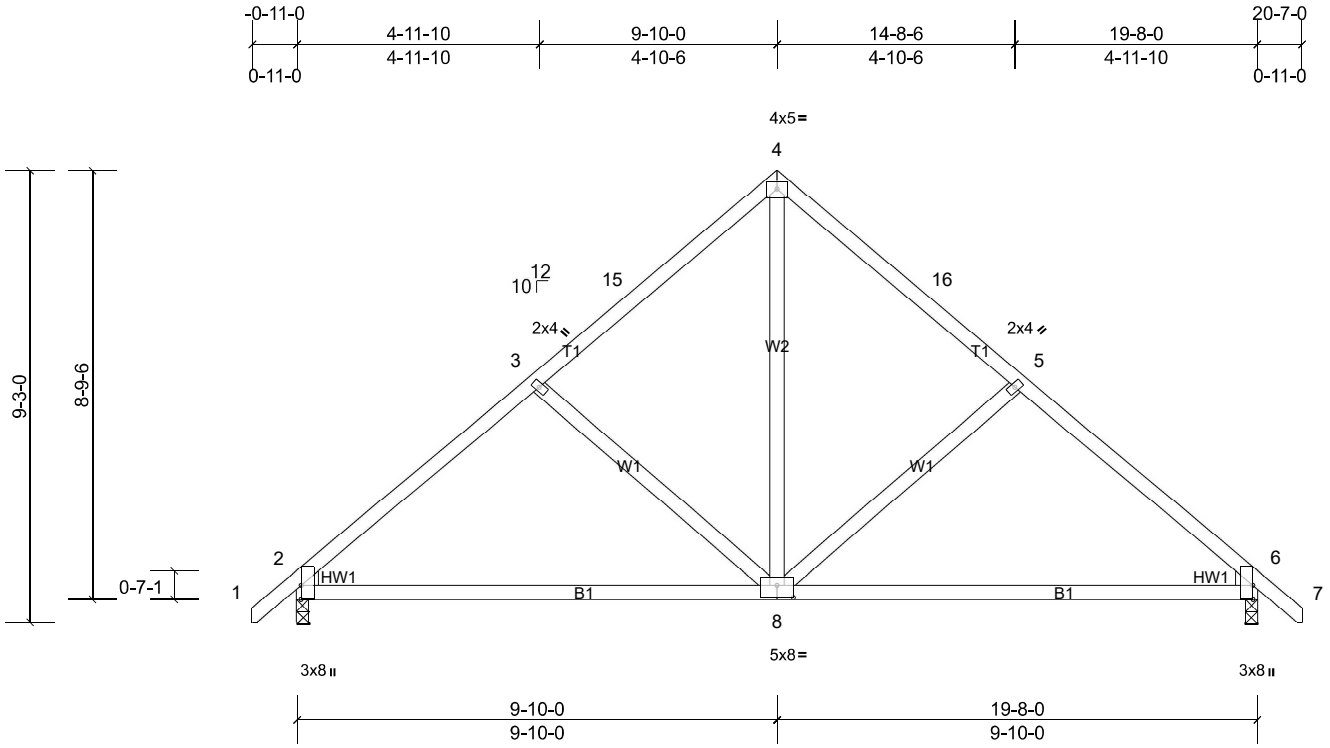

Scale = 1:47.2

Plate Offsets (X, Y): [2:0-3-8,Edge], [6:0-3-8,Edge], [8:0-4-0,0-3-0]

Loading	(psf)	Spacing	2-0-0	CSI		DEFL	in	(loc)	l/defl	L/d	PLATES	GRIP
TCLL (roof)	20.0	Plate Grip DOL	1.15	TC	0.33	Vert(LL)	0.03	8-11	>999	240	MT20	244/190
Snow (Pf/Pg)	13.9/20.0	Lumber DOL	1.15	BC	0.59	Vert(CT)	-0.16	8-11	>999	180		
TCDL	10.0	Rep Stress Incr	YES	WB	0.21	Horz(CT)	0.01	6	n/a	n/a		
BCLL	0.0*	Code	IRC2018/TPI2014	Matrix-MSH								
BCDL	10.0										Weight: 103 lb	FT = 20%

LUMBER

TOP CHORD	2x4 SP No.2
BOT CHORD	2x4 SP No.2
WEBS	2x4 SP No.2
WEDGE	Left: 2x4 SP No.3
	Right: 2x4 SP No.3

BRACING

TOP CHORD	Structural wood sheathing directly applied or 5-10-1 oc purlins.
BOT CHORD	Rigid ceiling directly applied or 10-0-0 oc bracing.

MiTek recommends that Stabilizers and required cross bracing be installed during truss erection, in accordance with Stabilizer Installation guide.

REACTIONS (lb/size) 2=707/0-3-0, (min. 0-1-8), 6=707/0-3-0, (min. 0-1-8)
Max Horiz 2=167 (LC 12)
Max Grav 2=838 (LC 2), 6=838 (LC 2)

FORCES (lb) - Max. Comp./Max. Ten. - All forces 250 (lb) or less except when shown.
TOP CHORD 2-3=-929/131, 3-15=-735/124, 4-15=-629/147, 4-16=-629/147, 5-16=-735/124, 5-6=-929/131
BOT CHORD 2-8=-79/707, 6-8=-1/677
WEBS 4-8=-67/538, 3-8=-283/148, 5-8=-283/148

NOTES

1) Unbalanced roof live loads have been considered for this design.
2) Wind: ASCE 7-16; Vult=130mph (3-second gust) Vasd=103mph; TCDL=6.0psf; BCDL=6.0psf; h=25ft; Cat. II; Exp B; Enclosed; MWFRS (envelope) and C-C Exterior(2E) -0-10-6 to 2-1-10, Interior (1) 2-1-10 to 9-10-0, Exterior(2R) 9-10-0 to 12-10-0, Interior (1) 12-10-0 to 20-6-6 zone;C-C for members and forces & MWFRS for reactions shown; Lumber DOL=1.60 plate grip DOL=1.33
3) TCLL: ASCE 7-16; Pr=20.0 psf (roof LL: Lum DOL=1.15 Plate DOL=1.15); Pg=20.0 psf; Pf=13.9 psf (Lum DOL=1.15 Plate DOL=1.15); Is=1.0; Rough Cat B; Fully Exp.; Ce=0.9; Cs=1.00; Ct=1.10
4) This truss has been designed for greater of min roof live load of 12.0 psf or 2.00 times flat roof load of 13.9 psf on overhangs non-concurrent with other live loads.
5) * This truss has been designed for a live load of 20.0psf on the bottom chord in all areas where a rectangle 3-06-00 tall by 2-00-00 wide will fit between the bottom chord and any other members.
6) This truss is designed in accordance with the 2018 International Residential Code sections R502.11.1 and R802.10.2 and referenced standard ANSI/TPI 1.

LOAD CASE(S) Standard

Job	Truss	Truss Type	Qty	Ply	Sloan-Roof - Bonus
21030004-C	D01G	Common Supported Gable	1	1	Job Reference (optional)

ID:LjKoK24FfxpbvfclThWFAbyXTqn-BYB2KiWaqDwSL6mqvv5dHNLwSZ8NjSLTe8cZZjz8fY3

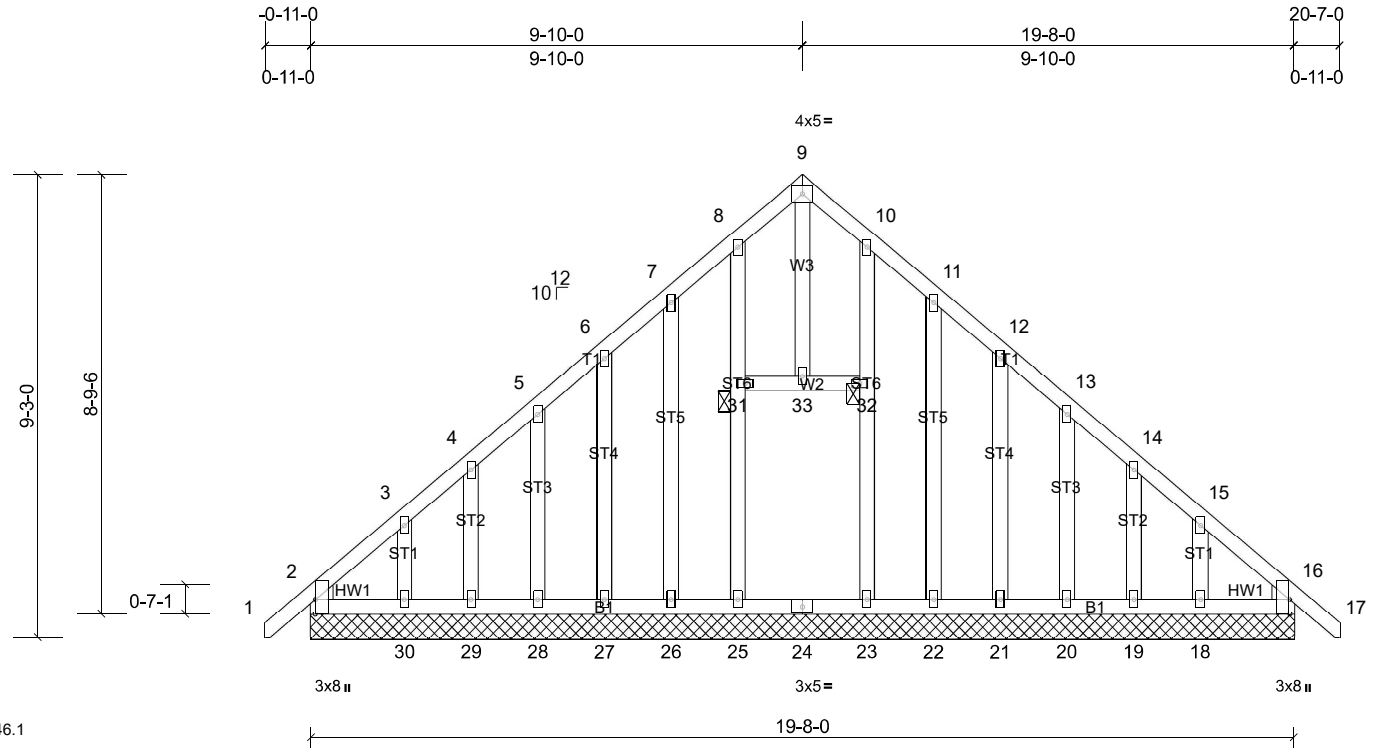

Scale = 1:46.1

Plate Offsets (X, Y): [2:0-3-8,Edge], [16:0-3-8,Edge]

Loading	(psf)	Spacing	2-0-0	CSI		DEFL	in	(loc)	l/defl	L/d	PLATES	GRIP
TCLL (roof)	20.0	Plate Grip DOL	1.15	TC	0.07	Vert(LL)	n/a	-	n/a	999	MT20	244/190
Snow (Pf/Pg)	13.9/20.0	Lumber DOL	1.15	BC	0.08	Vert(CT)	n/a	-	n/a	999		
TCDL	10.0	Rep Stress Incr	YES	WB	0.12	Horz(CT)	0.01	16	n/a	n/a		
BCLL	0.0*	Code	IRC2018/TPI2014	Matrix-MSH								
BCDL	10.0										Weight: 159 lb	FT = 20%

LUMBER

TOP CHORD	2x4 SP No.2
BOT CHORD	2x4 SP No.2
WEBS	2x4 SP No.3
OTHERS	2x4 SP No.3 *Except* ST6,ST5:2x4 SP No.2
WEDGE	Left: 2x4 SP No.3
	Right: 2x4 SP No.3

BRACING

TOP CHORD	Structural wood sheathing directly applied or 6-0-0 oc purlins.
BOT CHORD	Rigid ceiling directly applied or 10-0-0 oc bracing.
JOINTS	1 Brace at Jt(s): 31, 32

MiTek recommends that Stabilizers and required cross bracing be installed during truss erection, in accordance with Stabilizer Installation guide.

REACTIONS All bearings 19-8-0.
(lb) - Max Horiz 2=-167 (LC 11), 34=-167 (LC 11)
Max Uplift All uplift 100 (lb) or less at joint(s) 2, 18, 19, 20, 21, 22, 26, 27, 28, 29, 30, 34
Max Grav All reactions 250 (lb) or less at joint(s) 2, 16, 18, 19, 20, 21, 22, 23, 25, 26, 27, 28, 29, 30, 34, 38

FORCES (lb) - Max. Comp./Max. Ten. - All forces 250 (lb) or less except when shown.

NOTES

1) Unbalanced roof live loads have been considered for this design.
2) Wind: ASCE 7-16; Vult=130mph (3-second gust) Vasd=103mph; TCDL=6.0psf; BCDL=6.0psf; h=25ft; Cat. II; Exp B; Enclosed; MWFRS (envelope) and C-C Corner(3E) -0-10-6 to 1-10-8, Exterior(2N) 1-10-8 to 9-10-0, Corner(3R) 9-10-0 to 12-10-0, Exterior(2N) 12-10-0 to 20-6-6 zone;C-C for members and forces & MWFRS for reactions shown; Lumber DOL=1.60 plate grip DOL=1.33
3) Truss designed for wind loads in the plane of the truss only. For studs exposed to wind (normal to the face), see Standard Industry Gable End Details as applicable, or consult qualified building designer as per ANSI/TPI 1.
4) TCLL: ASCE 7-16; Pr=20.0 psf (roof LL: Lum DOL=1.15 Plate DOL=1.15); Pg=20.0 psf; Pf=13.9 psf (Lum DOL=1.15 Plate DOL=1.15); Is=1.0; Rough Cat B; Fully Exp.; Ce=0.9; Cs=1.00; Ct=1.10
5) This truss has been designed for greater of min roof live load of 12.0 psf or 2.00 times flat roof load of 13.9 psf on overhangs non-concurrent with other live loads.
6) All plates are 2x4 MT20 unless otherwise indicated.
7) Gable requires continuous bottom chord bearing.
8) Gable studs spaced at 1-4-0 oc.
9) * This truss has been designed for a live load of 20.0psf on the bottom chord in all areas where a rectangle 3-06-00 tall by 2-00-00 wide will fit between the bottom chord and any other members, with BCDL = 10.0psf.
10) One RT7A MiTek connectors recommended to connect truss to bearing walls due to UPLIFT at jt(s) 2, 26, 27, 28, 29, 30, 22, 21, 20, 19, and 18. This connection is for uplift only and does not consider lateral forces.
11) Beveled plate or shim required to provide full bearing surface with truss chord at joint(s) 2, 34.
12) This truss is designed in accordance with the 2018 International Residential Code sections R502.11.1 and R802.10.2 and referenced standard ANSI/TPI 1.

LOAD CASE(S) Standard

Job	Truss	Truss Type	Qty	Ply	Sloan-Roof - Bonus
21030004-C	D02	Common Supported Gable	1	1	Job Reference (optional)

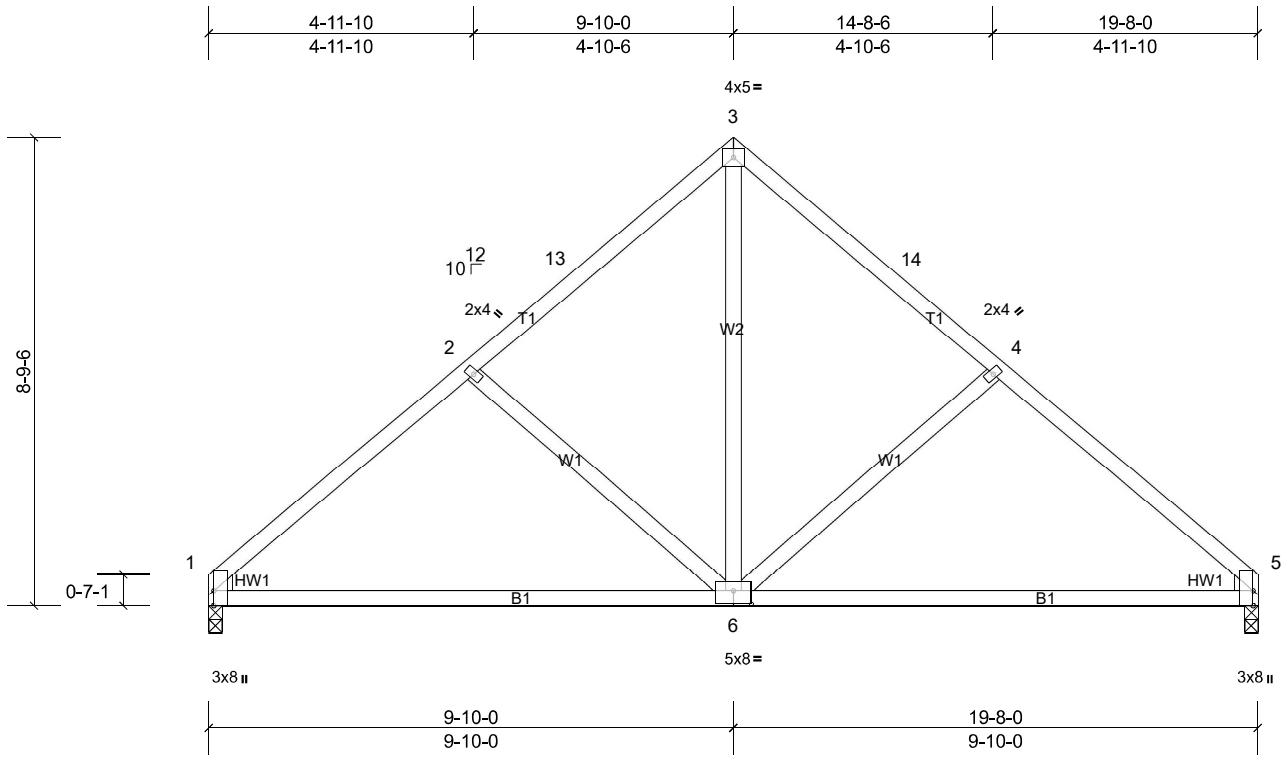

Scale = 1:43.2

Plate Offsets (X, Y): [1:0-3-8,Edge], [5:0-3-8,Edge], [6:0-4-0,0-3-0]

Loading	(psf)	Spacing	2-0-0	CSI		DEFL	in	(loc)	l/defl	L/d	PLATES	GRIP
TCLL (roof)	20.0	Plate Grip DOL	1.15	TC	0.34	Vert(LL)	0.03	6-9	>999	240	MT20	244/190
Snow (Pf/Pg)	13.9/20.0	Lumber DOL	1.15	BC	0.60	Vert(CT)	-0.17	6-9	>999	180		
TCDL	10.0	Rep Stress Incr	YES	WB	0.21	Horz(CT)	0.01	5	n/a	n/a		
BCLL	0.0 *	Code	IRC2018/TPI2014	Matrix-MSH								
BCDL	10.0										Weight: 100 lb	FT = 20%

LUMBER

TOP CHORD	2x4 SP No.2
BOT CHORD	2x4 SP No.2
WEBS	2x4 SP No.2
WEDGE	Left: 2x4 SP No.3
	Right: 2x4 SP No.3

BRACING

TOP CHORD	Structural wood sheathing directly applied or 5-9-10 oc purlins.
BOT CHORD	Rigid ceiling directly applied or 10-0-0 oc bracing.

MiTek recommends that Stabilizers and required cross bracing be installed during truss erection, in accordance with Stabilizer Installation guide.

REACTIONS (lb/size) 1=666/0-3-0, (min. 0-1-8), 5=666/0-3-0, (min. 0-1-8)
Max Horiz 1=154 (LC 12)
Max Grav 1=787 (LC 2), 5=787 (LC 2)

FORCES (lb) - Max. Comp./Max. Ten. - All forces 250 (lb) or less except when shown.
TOP CHORD 1-2=-934/134, 2-13=-739/127, 3-13=-633/150, 3-14=-633/150, 4-14=-739/127, 4-5=-934/134
BOT CHORD 1-6=-91/705, 5-6=-27/682
WEBS 3-6=-70/545, 2-6=-286/149, 4-6=-286/149

NOTES

1) Unbalanced roof live loads have been considered for this design.
2) Wind: ASCE 7-16; Vult=130mph (3-second gust) Vasd=103mph; TCDL=6.0psf; BCDL=6.0psf; h=25ft; Cat. II; Exp B; Enclosed; MWFRS (envelope) and C-C Exterior(2E) 0-0-0 to 3-0-0, Interior (1) 3-0-0 to 9-10-0, Exterior(2R) 9-10-0 to 12-10-0, Interior (1) 12-10-0 to 19-8-0 zone;C-C for members and forces & MWFRS for reactions shown; Lumber DOL=1.60 plate grip DOL=1.33
3) TCLL: ASCE 7-16; Pr=20.0 psf (roof LL: Lum DOL=1.15 Plate DOL=1.15); Pg=20.0 psf; Pf=13.9 psf (Lum DOL=1.15 Plate DOL=1.15); Is=1.0; Rough Cat B; Fully Exp.; Ce=0.9; Cs=1.00; Ct=1.10
4) * This truss has been designed for a live load of 20.0psf on the bottom chord in all areas where a rectangle 3-06-00 tall by 2-00-00 wide will fit between the bottom chord and any other members.
5) This truss is designed in accordance with the 2018 International Residential Code sections R502.11.1 and R802.10.2 and referenced standard ANSI/TPI 1.

LOAD CASE(S) Standard

Job	Truss	Truss Type	Qty	Ply	Sloan-Roof - Bonus
21030004-C	E01G	Common Supported Gable	1	1	Job Reference (optional)

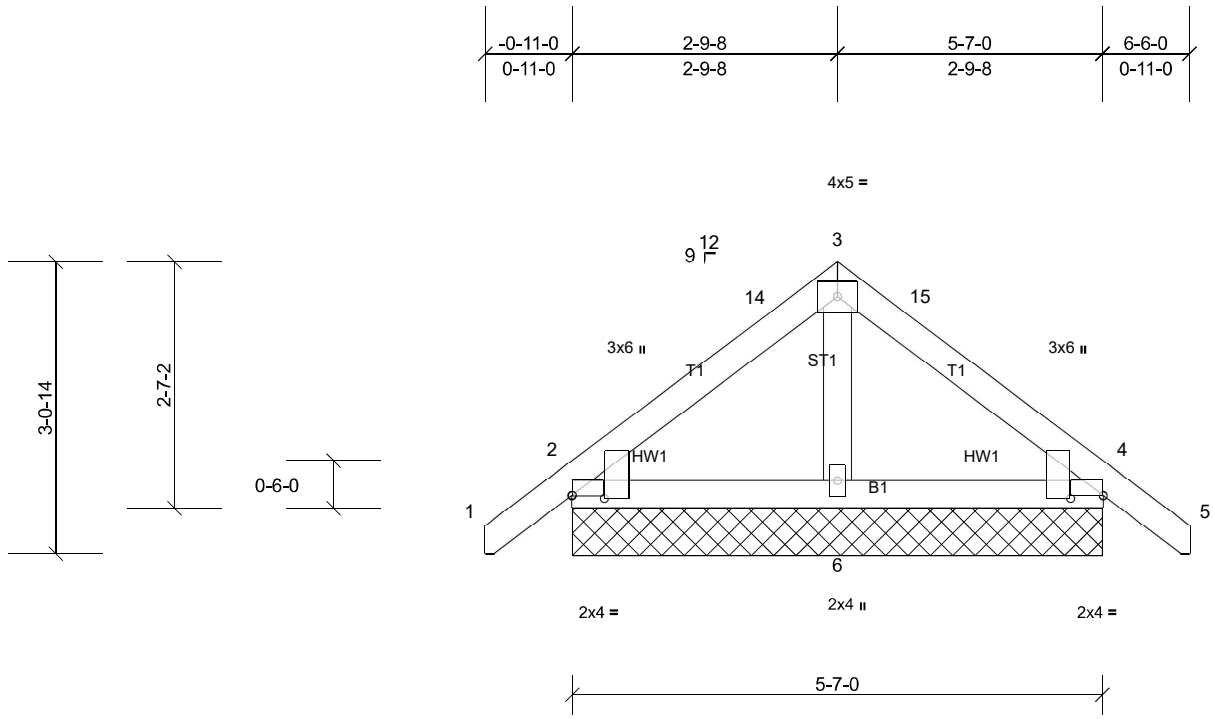

Scale = 1:24.3

Plate Offsets (X, Y): [2:Edge,0-0-1], [2:0-0-6,0-4-2], [4:Edge,0-0-1], [4:0-0-6,0-4-2]

Loading	(psf)	Spacing	2-0-0	CSI		DEFL	in	(loc)	l/defl	L/d	PLATES	GRIP
TCLL (roof)	20.0	Plate Grip DOL	1.15	TC	0.10	Vert(LL)	n/a	-	n/a	999	MT20	244/190
Snow (Pf/Pg)	13.9/20.0	Lumber DOL	1.15	BC	0.10	Vert(CT)	n/a	-	n/a	999		
TCDL	10.0	Rep Stress Incr	YES	WB	0.01	Horz(CT)	0.00	2	n/a	n/a		
BCLL	0.0 *	Code	IRC2018/TPI2014	Matrix-MP								
BCDL	10.0										Weight: 27 lb	FT = 20%

LUMBER

TOP CHORD	2x4 SP No.2
BOT CHORD	2x4 SP No.2
OTHERS	2x4 SP No.3
WEDGE	Left: 2x4 SP No.2
	Right: 2x4 SP No.2

BRACING

TOP CHORD	Structural wood sheathing directly applied or 5-7-0 oc purlins.
BOT CHORD	Rigid ceiling directly applied or 10-0-0 oc bracing.

MiTek recommends that Stabilizers and required cross bracing be installed during truss erection, in accordance with Stabilizer Installation guide.

REACTIONS All bearings 5-7-0.
(lb) - Max Horiz 2=52 (LC 12), 7=52 (LC 12)
Max Uplift All uplift 100 (lb) or less at joint(s) 2, 4, 7, 11
Max Grav All reactions 250 (lb) or less at joint(s) 2, 4, 6, 7, 11

FORCES (lb) - Max. Comp./Max. Ten. - All forces 250 (lb) or less except when shown.

NOTES

1) Unbalanced roof live loads have been considered for this design.
2) Wind: ASCE 7-16; Vult=130mph (3-second gust) Vasd=103mph; TCDL=6.0psf; BCDL=6.0psf; h=25ft; Cat. II; Exp B; Enclosed; MWFRS (envelope) and C-C Corner(3E) -0-10-7 to 2-1-9, Exterior(2N) 2-1-9 to 2-9-8, Corner(3R) 2-9-8 to 5-7-0, Exterior(2N) 5-7-0 to 6-5-7 zone;C-C for members and forces & MWFRS for reactions shown; Lumber DOL=1.60 plate grip DOL=1.33
3) Truss designed for wind loads in the plane of the truss only. For studs exposed to wind (normal to the face), see Standard Industry Gable End Details as applicable, or consult qualified building designer as per ANSI/TPI 1.
4) TCLL: ASCE 7-16; Pr=20.0 psf (roof LL: Lum DOL=1.15 Plate DOL=1.15); Pg=20.0 psf; Pf=13.9 psf (Lum DOL=1.15 Plate DOL=1.15); Is=1.0; Rough Cat B; Fully Exp.; Ce=0.9; Cs=1.00; Ct=1.10
5) This truss has been designed for greater of min roof live load of 12.0 psf or 2.00 times flat roof load of 13.9 psf on overhangs non-concurrent with other live loads.
6) Gable requires continuous bottom chord bearing.
7) Gable studs spaced at 2-0-0 oc.
8) * This truss has been designed for a live load of 20.0psf on the bottom chord in all areas where a rectangle 3-06-00 tall by 2-00-00 wide will fit between the bottom chord and any other members.
9) One RT7A MiTek connectors recommended to connect truss to bearing walls due to UPLIFT at jt(s) 2 and 4. This connection is for uplift only and does not consider lateral forces.
10) This truss is designed in accordance with the 2018 International Residential Code sections R502.11.1 and R802.10.2 and referenced standard ANSI/TPI 1.

LOAD CASE(S) Standard

Job	Truss	Truss Type	Qty	Ply	Sloan-Roof - Bonus
21030004-C	PB01	Piggyback	14	1	Job Reference (optional)

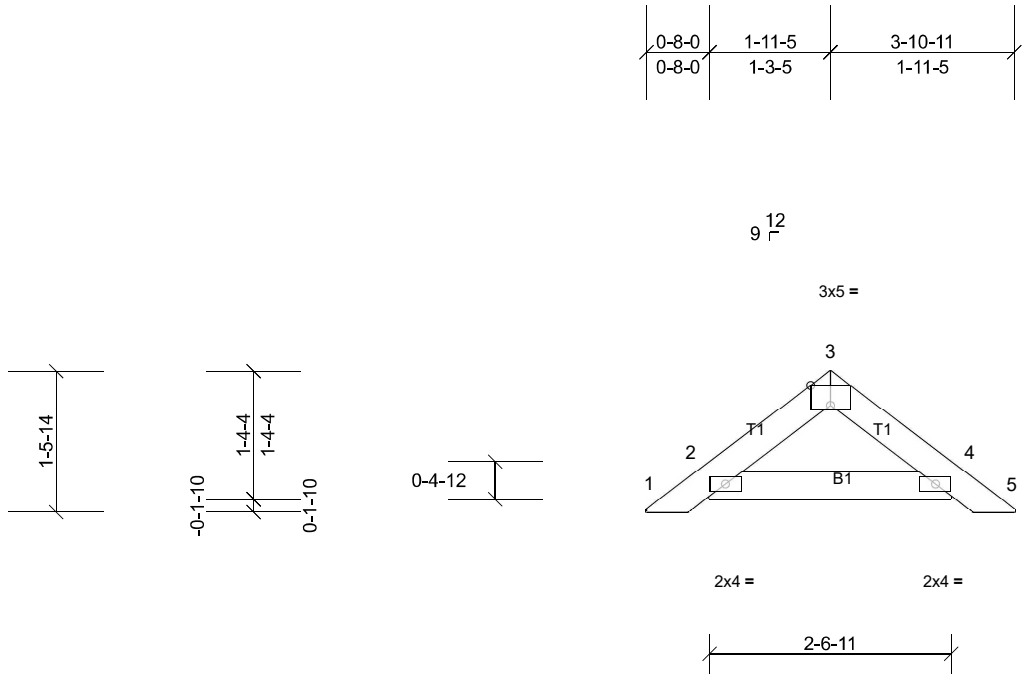

Scale = 1:24.4

Plate Offsets (X, Y): [3:0-2-8,Edge]

Loading	(psf)	Spacing	2-0-0	CSI		DEFL	in	(loc)	l/defl	L/d	PLATES	GRIP
TCLL (roof)	20.0	Plate Grip DOL	1.15	TC	0.02	Vert(LL)	n/a	-	n/a	999	MT20	244/190
Snow (Pf/Pg)	13.9/20.0	Lumber DOL	1.15	BC	0.03	Vert(CT)	n/a	-	n/a	999		
TCDL	10.0	Rep Stress Incr	YES	WB	0.00	Horz(CT)	0.00	10	n/a	n/a		
BCLL	0.0 *	Code	IRC2018/TPI2014	Matrix-MP								
BCDL	10.0										Weight: 11 lb	FT = 20%

LUMBER
TOP CHORD 2x4 SP No.2
BOT CHORD 2x4 SP No.2

BRACING
TOP CHORD Structural wood sheathing directly applied or 3-11-11 oc purlins.
BOT CHORD Rigid ceiling directly applied or 10-0-0 oc bracing.

MiTek recommends that Stabilizers and required cross bracing be installed during truss erection, in accordance with Stabilizer Installation guide.

REACTIONS All bearings 2-6-11.
(lb) - Max Horiz 2=-24 (LC 11), 6=-24 (LC 11)
Max Uplift All uplift 100 (lb) or less at joint(s) 2, 6
Max Grav All reactions 250 (lb) or less at joint(s) 2, 4, 6, 10

FORCES (lb) - Max. Comp./Max. Ten. - All forces 250 (lb) or less except when shown.

NOTES
1) Unbalanced roof live loads have been considered for this design.
2) Wind: ASCE 7-16; Vult=130mph (3-second gust) Vasd=103mph; TCDL=6.0psf; BCDL=6.0psf; h=25ft; Cat. II; Exp B; Enclosed; MWFRS (envelope) and C-C Exterior(2E) zone;C-C for members and forces & MWFRS for reactions shown; Lumber DOL=1.60 plate grip DOL=1.33
3) Truss designed for wind loads in the plane of the truss only. For studs exposed to wind (normal to the face), see Standard Industry Gable End Details as applicable, or consult qualified building designer as per ANSI/TPI 1.
4) TCLL: ASCE 7-16; Pr=20.0 psf (roof LL: Lum DOL=1.15 Plate DOL=1.15); Pg=20.0 psf; Pf=13.9 psf (Lum DOL=1.15 Plate DOL=1.15); Is=1.0; Rough Cat B; Fully Exp.; Ce=0.9; Cs=1.00; Ct=1.10
5) This truss has been designed for greater of min roof live load of 12.0 psf or 2.00 times flat roof load of 13.9 psf on overhangs non-concurrent with other live loads.
6) Gable requires continuous bottom chord bearing.
7) Gable studs spaced at 4-0-0 oc.
8) * This truss has been designed for a live load of 20.0psf on the bottom chord in all areas where a rectangle 3-06-00 tall by 2-00-00 wide will fit between the bottom chord and any other members.
9) One RT7A MiTek connectors recommended to connect truss to bearing walls due to UPLIFT at jt(s) 2. This connection is for uplift only and does not consider lateral forces.
10) This truss is designed in accordance with the 2018 International Residential Code sections R502.11.1 and R802.10.2 and referenced standard ANSI/TPI 1.
11) See Standard Industry Piggyback Truss Connection Detail for Connection to base truss as applicable, or consult qualified building designer.

LOAD CASE(S) Standard

Job	Truss	Truss Type	Qty	Ply	Sloan-Roof - Bonus
21030004-C	PB01(2)	Piggyback	2	**2**	Job Reference (optional)

ID:_LqxANFHYMEbhIVegqbqzzyXUBo-7xJpIOXqMqAAaQwD0K75MoQGrNqqBNim5R5gecz8fY1

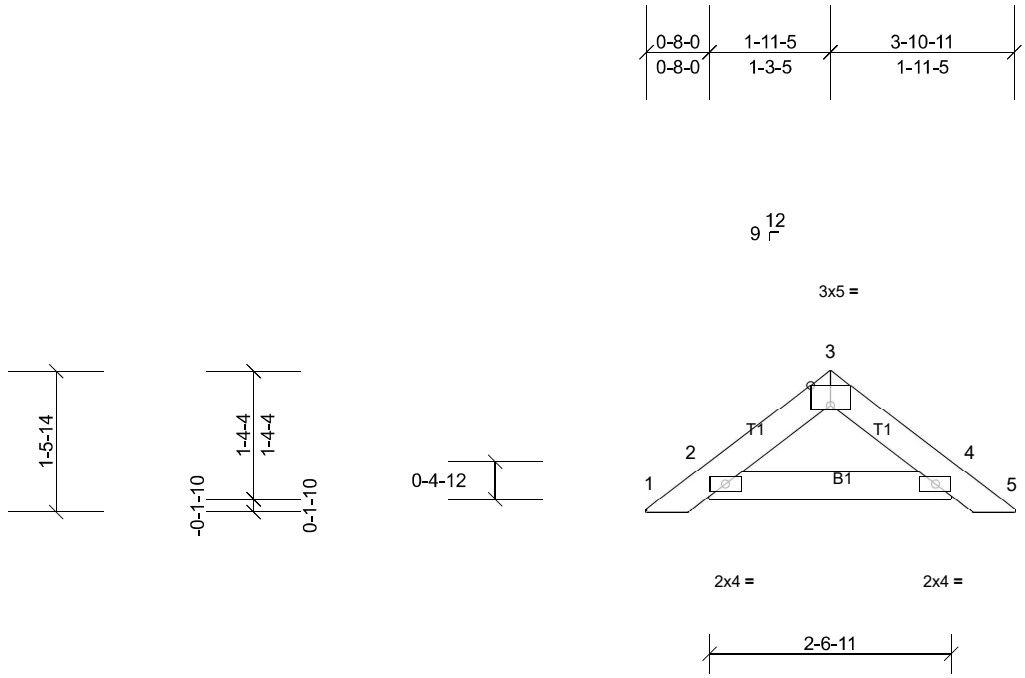

Scale = 1:24.4

Plate Offsets (X, Y): [3:0-2-8,Edge]

Loading	(psf)	**Spacing**	2-0-0	**CSI**		**DEFL**	in	(loc)	l/defl	L/d	**PLATES**	**GRIP**
TCLL (roof)	20.0	Plate Grip DOL	1.15	TC	0.01	Vert(LL)	n/a	-	n/a	999	MT20	244/190
Snow (Pf/Pg)	13.9/20.0	Lumber DOL	1.15	BC	0.02	Vert(CT)	n/a	-	n/a	999		
TCDL	10.0	Rep Stress Incr	YES	WB	0.00	Horz(CT)	0.00	10	n/a	n/a		
BCLL	0.0 *	Code	IRC2018/TPI2014	Matrix-MP								
BCDL	10.0										Weight: 22 lb	FT = 20%

LUMBER
TOP CHORD 2x4 SP No.2
BOT CHORD 2x4 SP No.2

BRACING
TOP CHORD Structural wood sheathing directly applied or 3-11-11 oc purlins.
BOT CHORD Rigid ceiling directly applied or 10-0-0 oc bracing.

REACTIONS All bearings 2-6-11.
(lb) - Max Horiz 2=-24 (LC 11), 6=-24 (LC 11)
Max Uplift All uplift 100 (lb) or less at joint(s) 2, 6
Max Grav All reactions 250 (lb) or less at joint(s) 2, 4, 6, 10

FORCES (lb) - Max. Comp./Max. Ten. - All forces 250 (lb) or less except when shown.

NOTES
1) 2-ply truss to be connected together as follows:
Top chords connected with 10d (0.131"x3") nails as follows: 2x4 - 1 row at 0-9-0 oc.
Bottom chords connected with 10d (0.131"x3") nails as follows: 2x4 - 1 row at 0-9-0 oc.
2) All loads are considered equally applied to all plies, except if noted as front (F) or back (B) face in the LOAD CASE(S) section. Ply to ply connections have been provided to distribute only loads noted as (F) or (B), unless otherwise indicated.
3) Unbalanced roof live loads have been considered for this design.
4) Wind: ASCE 7-16; Vult=130mph (3-second gust) Vasd=103mph; TCDL=6.0psf; BCDL=6.0psf; h=25ft; Cat. II; Exp B; Enclosed; MWFRS (envelope) and C-C Exterior(2E) zone;C-C for members and forces & MWFRS for reactions shown; Lumber DOL=1.60 plate grip DOL=1.33
5) Truss designed for wind loads in the plane of the truss only. For studs exposed to wind (normal to the face), see Standard Industry Gable End Details as applicable, or consult qualified building designer as per ANSI/TPI 1.
6) TCLL: ASCE 7-16; Pr=20.0 psf (roof LL: Lum DOL=1.15 Plate DOL=1.15); Pg=20.0 psf; Pf=13.9 psf (Lum DOL=1.15 Plate DOL=1.15); Is=1.0; Rough Cat B; Fully Exp.; Ce=0.9; Cs=1.00; Ct=1.10
7) This truss has been designed for greater of min roof live load of 12.0 psf or 2.00 times flat roof load of 13.9 psf on overhangs non-concurrent with other live loads.
8) Gable requires continuous bottom chord bearing.
9) Gable studs spaced at 4-0-0 oc.
10) * This truss has been designed for a live load of 20.0psf on the bottom chord in all areas where a rectangle 3-06-00 tall by 2-00-00 wide will fit between the bottom chord and any other members.
11) One RT7A MiTek connectors recommended to connect truss to bearing walls due to UPLIFT at jt(s) 2. This connection is for uplift only and does not consider lateral forces.
12) This truss is designed in accordance with the 2018 International Residential Code sections R502.11.1 and R802.10.2 and referenced standard ANSI/TPI 1.
13) See Standard Industry Piggyback Truss Connection Detail for Connection to base truss as applicable, or consult qualified building designer.

LOAD CASE(S) Standard

Job	Truss	Truss Type	Qty	Ply	Sloan-Roof - Bonus
21030004-C	PB02	Piggyback	15	1	Job Reference (optional)

ID:kIGi7oKUFc9m3OnjAiKhnLyXUKk-7xJplOXqMqAAaQwD0K75MoQF4No?BNSm5R5gecz8fY1

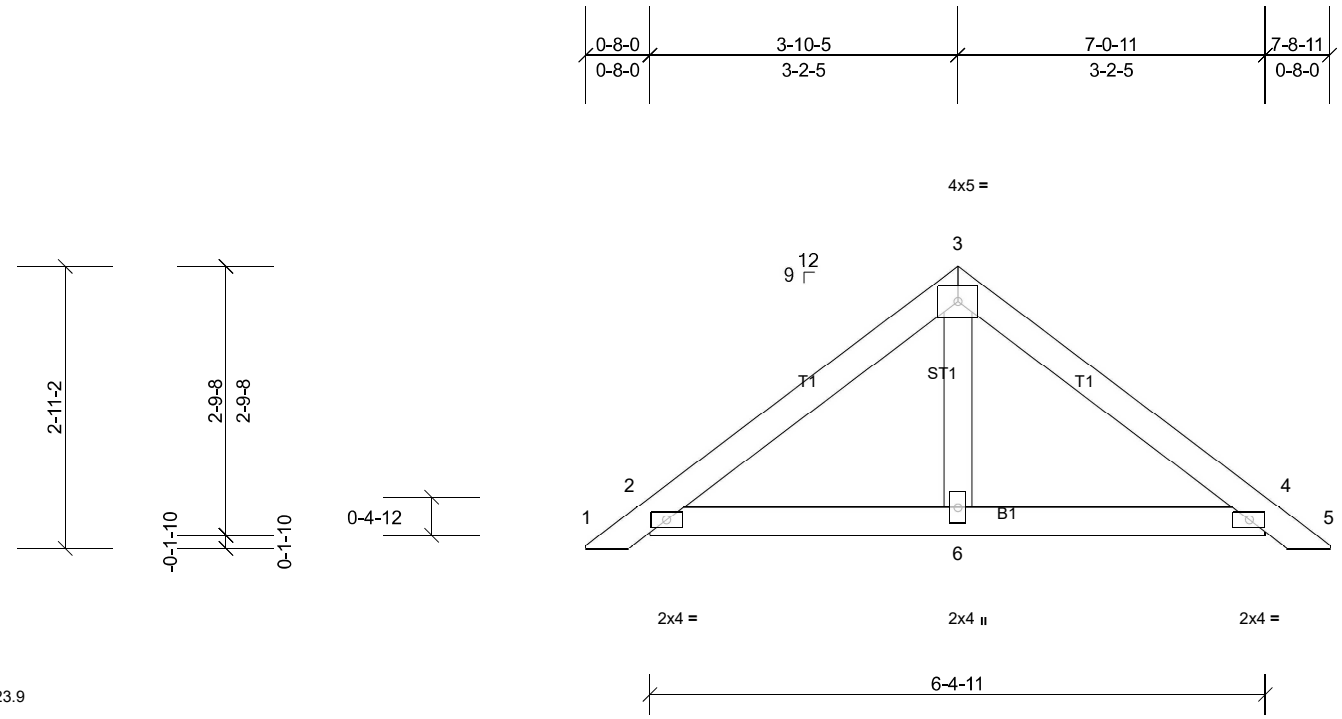

Scale = 1:23.9

Loading	(psf)	Spacing	2-0-0	CSI		DEFL	in	(loc)	l/defl	L/d	PLATES	GRIP
TCLL (roof)	20.0	Plate Grip DOL	1.15	TC	0.13	Vert(LL)	n/a	-	n/a	999	MT20	244/190
Snow (Pf/Pg)	13.9/20.0	Lumber DOL	1.15	BC	0.13	Vert(CT)	n/a	-	n/a	999		
TCDL	10.0	Rep Stress Incr	YES	WB	0.02	Horz(CT)	0.00	2	n/a	n/a		
BCLL	0.0 *	Code	IRC2018/TPI2014	Matrix-MP								
BCDL	10.0										Weight: 27 lb	FT = 20%

LUMBER
TOP CHORD 2x4 SP No.2
BOT CHORD 2x4 SP No.2
OTHERS 2x4 SP No.3

BRACING
TOP CHORD Structural wood sheathing directly applied or 6-0-0 oc purlins.
BOT CHORD Rigid ceiling directly applied or 10-0-0 oc bracing.

MiTek recommends that Stabilizers and required cross bracing be installed during truss erection, in accordance with Stabilizer Installation guide.

REACTIONS All bearings 6-4-11.
(lb) - Max Horiz 2=51 (LC 12), 7=51 (LC 12)
Max Uplift All uplift 100 (lb) or less at joint(s) 2, 4, 7, 11
Max Grav All reactions 250 (lb) or less at joint(s) 2, 4, 6, 7, 11

FORCES (lb) - Max. Comp./Max. Ten. - All forces 250 (lb) or less except when shown.

NOTES
1) Unbalanced roof live loads have been considered for this design.
2) Wind: ASCE 7-16; Vult=130mph (3-second gust) Vasd=103mph; TCDL=6.0psf; BCDL=6.0psf; h=25ft; Cat. II; Exp B; Enclosed; MWFRS (envelope) and C-C Exterior(2E) 0-3-3 to 3-3-3, Interior (1) 3-3-3 to 3-10-13, Exterior(2R) 3-10-13 to 6-9-0, Interior (1) 6-9-0 to 7-6-8 zone;C-C for members and forces & MWFRS for reactions shown; Lumber DOL=1.60 plate grip DOL=1.33
3) Truss designed for wind loads in the plane of the truss only. For studs exposed to wind (normal to the face), see Standard Industry Gable End Details as applicable, or consult qualified building designer as per ANSI/TPI 1.
4) TCLL: ASCE 7-16; Pr=20.0 psf (roof LL: Lum DOL=1.15 Plate DOL=1.15); Pg=20.0 psf; Pf=13.9 psf (Lum DOL=1.15 Plate DOL=1.15); Is=1.0; Rough Cat B; Fully Exp.; Ce=0.9; Cs=1.00; Ct=1.10
5) This truss has been designed for greater of min roof live load of 12.0 psf or 2.00 times flat roof load of 13.9 psf on overhangs non-concurrent with other live loads.
6) Gable requires continuous bottom chord bearing.
7) Gable studs spaced at 4-0-0 oc.
8) * This truss has been designed for a live load of 20.0psf on the bottom chord in all areas where a rectangle 3-06-00 tall by 2-00-00 wide will fit between the bottom chord and any other members.
9) One RT7A MiTek connectors recommended to connect truss to bearing walls due to UPLIFT at jt(s) 2 and 4. This connection is for uplift only and does not consider lateral forces.
10) This truss is designed in accordance with the 2018 International Residential Code sections R502.11.1 and R802.10.2 and referenced standard ANSI/TPI 1.
11) See Standard Industry Piggyback Truss Connection Detail for Connection to base truss as applicable, or consult qualified building designer.

LOAD CASE(S) Standard

Job	Truss	Truss Type	Qty	Ply	Sloan-Roof - Bonus
21030004-C	PB03	Piggyback	2	1	Job Reference (optional)

ID:929FIK0gWJg1ElvQpOKHwfyXUIZ-7xJpIOXqMqAAaQwD0K75MoQGFNqkBN0m5R5gecz8fY1

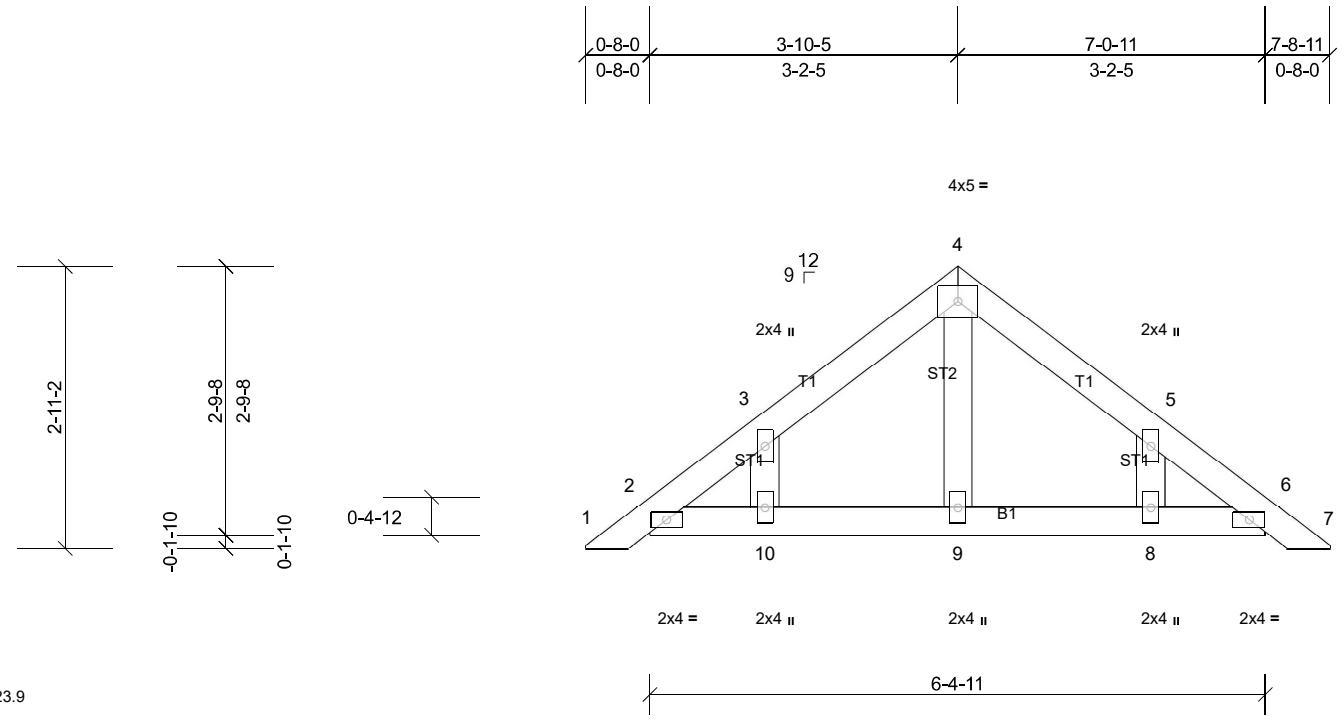

Scale = 1:23.9

Loading	(psf)	Spacing	2-0-0	CSI		DEFL	in	(loc)	l/defl	L/d	PLATES	GRIP
TCLL (roof)	20.0	Plate Grip DOL	1.15	TC	0.05	Vert(LL)	n/a	-	n/a	999	MT20	244/190
Snow (Pf/Pg)	13.9/20.0	Lumber DOL	1.15	BC	0.02	Vert(CT)	n/a	-	n/a	999		
TCDL	10.0	Rep Stress Incr	YES	WB	0.04	Horz(CT)	0.00	15	n/a	n/a		
BCLL	0.0 *	Code	IRC2018/TPI2014	Matrix-MP								
BCDL	10.0										Weight: 29 lb	FT = 20%

LUMBER
TOP CHORD 2x4 SP No.2
BOT CHORD 2x4 SP No.2
OTHERS 2x4 SP No.3

BRACING
TOP CHORD Structural wood sheathing directly applied or 6-0-0 oc purlins.
BOT CHORD Rigid ceiling directly applied or 10-0-0 oc bracing.

MiTek recommends that Stabilizers and required cross bracing be installed during truss erection, in accordance with Stabilizer Installation guide.

REACTIONS All bearings 6-4-11.
(lb) - Max Horiz 2=51 (LC 12), 11=51 (LC 12)
Max Uplift All uplift 100 (lb) or less at joint(s) 2, 8, 10, 11
Max Grav All reactions 250 (lb) or less at joint(s) 2, 6, 8, 9, 10, 11, 15

FORCES (lb) - Max. Comp./Max. Ten. - All forces 250 (lb) or less except when shown.

NOTES
1) Unbalanced roof live loads have been considered for this design.
2) Wind: ASCE 7-16; Vult=130mph (3-second gust) Vasd=103mph; TCDL=6.0psf; BCDL=6.0psf; h=25ft; Cat. II; Exp B; Enclosed; MWFRS (envelope) and C-C Exterior(2E) 0-3-3 to 3-3-3, Interior (1) 3-3-3 to 3-10-13, Exterior(2R) 3-10-13 to 6-9-0, Interior (1) 6-9-0 to 7-6-8 zone;C-C for members and forces & MWFRS for reactions shown; Lumber DOL=1.60 plate grip DOL=1.33
3) Truss designed for wind loads in the plane of the truss only. For studs exposed to wind (normal to the face), see Standard Industry Gable End Details as applicable, or consult qualified building designer as per ANSI/TPI 1.
4) TCLL: ASCE 7-16; Pr=20.0 psf (roof LL: Lum DOL=1.15 Plate DOL=1.15); Pg=20.0 psf; Pf=13.9 psf (Lum DOL=1.15 Plate DOL=1.15); Is=1.0; Rough Cat B; Fully Exp.; Ce=0.9; Cs=1.00; Ct=1.10
5) This truss has been designed for greater of min roof live load of 12.0 psf or 2.00 times flat roof load of 13.9 psf on overhangs non-concurrent with other live loads.
6) Gable requires continuous bottom chord bearing.
7) Gable studs spaced at 2-0-0 oc.
8) * This truss has been designed for a live load of 20.0psf on the bottom chord in all areas where a rectangle 3-06-00 tall by 2-00-00 wide will fit between the bottom chord and any other members.
9) One RT7A MiTek connectors recommended to connect truss to bearing walls due to UPLIFT at jt(s) 2, 10, and 8. This connection is for uplift only and does not consider lateral forces.
10) This truss is designed in accordance with the 2018 International Residential Code sections R502.11.1 and R802.10.2 and referenced standard ANSI/TPI 1.
11) See Standard Industry Piggyback Truss Connection Detail for Connection to base truss as applicable, or consult qualified building designer.

LOAD CASE(S) Standard

Job	Truss	Truss Type	Qty	Ply	Sloan-Roof - Bonus
21030004-C	R1001	Flat Girder	1	2	Job Reference (optional)

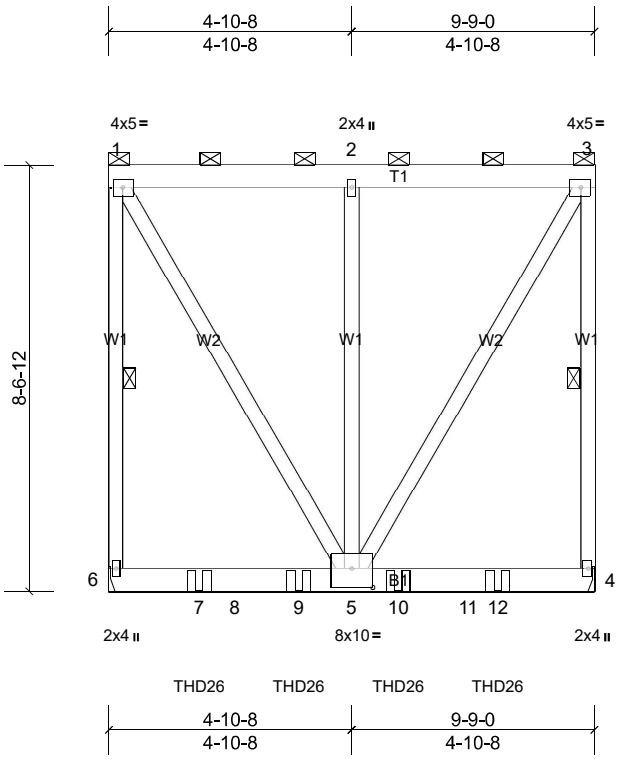

Scale = 1:46.3

Plate Offsets (X, Y): [5:0-5-0,0-4-8]

Loading	(psf)	Spacing	1-11-4	CSI		DEFL	in	(loc)	l/defl	L/d	PLATES	GRIP
TCLL (roof)	20.0	Plate Grip DOL	1.15	TC	0.28	Vert(LL)	-0.03	5-6	>999	240	MT20	244/190
Snow (Pf/Pg)	18.9/20.0	Lumber DOL	1.15	BC	0.70	Vert(CT)	-0.06	5-6	>999	180		
TCDL	10.0	Rep Stress Incr	NO	WB	0.37	Horz(CT)	0.00	4	n/a	n/a		
BCLL	0.0 *	Code	IRC2018/TPI2014	Matrix-MSH								
BCDL	10.0										Weight: 212 lb	FT = 20%

LUMBER

TOP CHORD	2x6 SP No.2
BOT CHORD	2x6 SP No.2
WEBS	2x4 SP No.3

BRACING

TOP CHORD	2-0-0 oc purlins (6-0-0 max.): 1-3, except end verticals.
BOT CHORD	Rigid ceiling directly applied or 10-0-0 oc bracing.
WEBS	1 Row at midpt 1-6, 3-4

REACTIONS (lb/size) 4=1781/ Mechanical, (min. 0-1-8), 6=1819/ Mechanical, (min. 0-1-8)
Max Uplift 4=-58 (LC 7), 6=-60 (LC 7)
Max Grav 4=2285 (LC 24), 6=2336 (LC 24)

FORCES (lb) - Max. Comp./Max. Ten. - All forces 250 (lb) or less except when shown.
TOP CHORD 1-6=-1669/65, 1-2=-924/24, 2-3=-924/24, 3-4=-1669/65
WEBS 1-5=-46/1808, 2-5=-295/96, 3-5=-46/1809

NOTES

1) 2-ply truss to be connected together with 10d (0.131"x3") nails as follows:
Top chords connected as follows: 2x4 - 1 row at 0-9-0 oc, 2x6 - 2 rows staggered at 0-9-0 oc.
Bottom chords connected as follows: 2x6 - 2 rows staggered at 0-9-0 oc.
Web connected as follows: 2x4 - 1 row at 0-9-0 oc.
2) All loads are considered equally applied to all plies, except if noted as front (F) or back (B) face in the LOAD CASE(S) section. Ply to ply connections have been provided to distribute only loads noted as (F) or (B), unless otherwise indicated.
3) Wind: ASCE 7-16; Vult=130mph (3-second gust) Vasd=103mph; TCDL=6.0psf; BCDL=6.0psf; h=25ft; Cat. II; Exp B; Enclosed; MWFRS (envelope); Lumber DOL=1.60 plate grip DOL=1.33
4) TCLL: ASCE 7-16; Pr=20.0 psf (roof LL: Lum DOL=1.15 Plate DOL=1.15); Pg=20.0 psf; Pf=18.9 psf (Lum DOL=1.15 Plate DOL=1.15); Is=1.0; Rough Cat B; Fully Exp.; Ce=0.9; Cs=1.00; Ct=1.10, Lu=50-0-0; Min. flat roof snow load governs. Rain surcharge applied to all exposed surfaces with slopes less than 0.500/12 in accordance with IBC 1608.3.4.
5) Unbalanced snow loads have been considered for this design.
6) Provide adequate drainage to prevent water ponding.
7) * This truss has been designed for a live load of 20.0psf on the bottom chord in all areas where a rectangle 3-06-00 tall by 2-00-00 wide will fit between the bottom chord and any other members, with BCDL = 10.0psf.
8) Refer to girder(s) for truss to truss connections.
9) Provide mechanical connection (by others) of truss to bearing plate capable of withstanding 60 lb uplift at joint 6 and 58 lb uplift at joint 4.
10) This truss is designed in accordance with the 2018 International Residential Code sections R502.11.1 and R802.10.2 and referenced standard ANSI/TPI 1.
11) Graphical purlin representation does not depict the size or the orientation of the purlin along the top and/or bottom chord.
12) Use MiTek THD26 (With 18-16d nails into Girder & 12-10d x 1-1/2 nails into Truss) or equivalent spaced at 2-0-0 oc max. starting at 1-9-12 from the left end to 7-9-12 to connect truss(es) B04 (1 ply 2x6 SP) to back face of bottom chord.
13) Fill all nail holes where hanger is in contact with lumber.

LOAD CASE(S) Standard
1) Dead + Snow (balanced): Lumber Increase=1.15, Plate Increase=1.15
Uniform Loads (lb/ft)

Continued on page 2

Vert: 1-3=-56, 4-6=-19

Concentrated Loads (lb)

Vert: 7=-722 (B), 9=-722 (B), 10=-722 (B), 12=-722 (B)

Job	Truss	Truss Type	Qty	Ply	Sloan-Roof - Bonus
21030004-C	V01	Valley	1	1	Job Reference (optional)

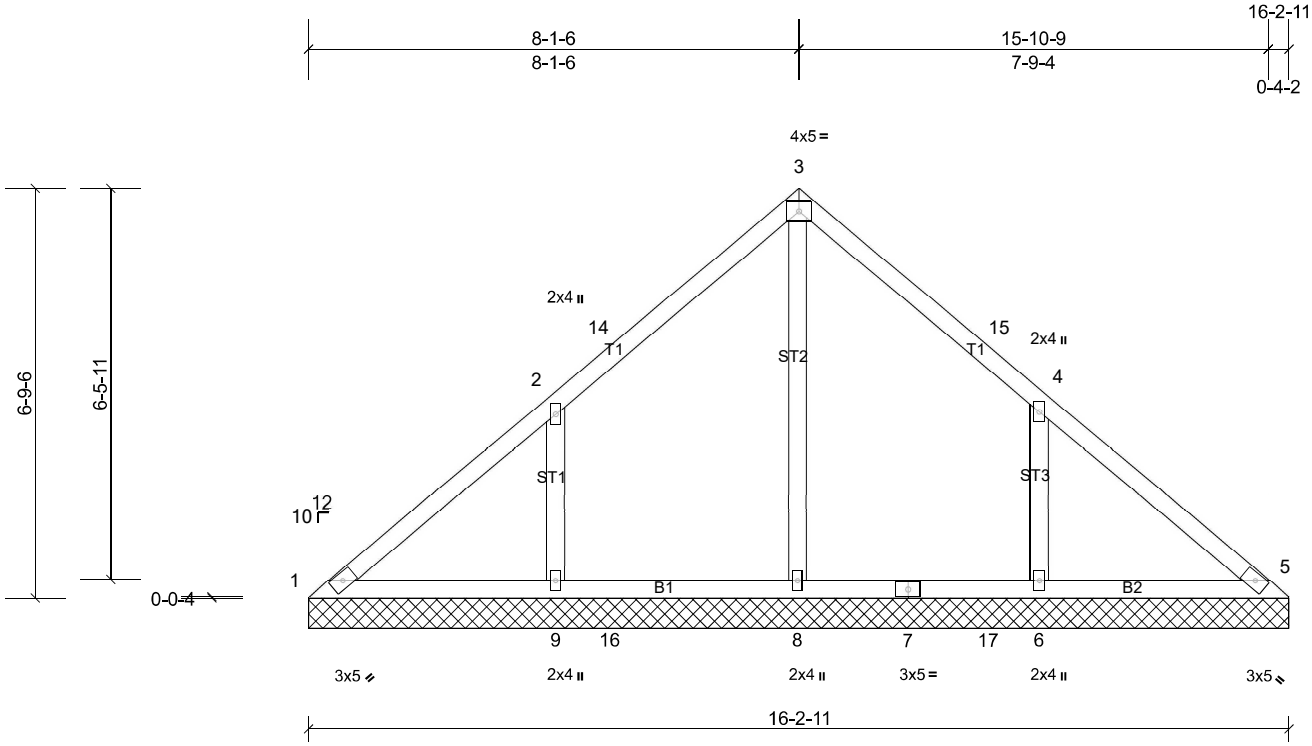

Scale = 1:38.1

Loading	(psf)	Spacing	2-0-0	CSI		DEFL	in	(loc)	l/defl	L/d	PLATES	GRIP
TCLL (roof)	20.0	Plate Grip DOL	1.15	TC	0.24	Vert(LL)	n/a	-	n/a	999	MT20	244/190
Snow (Pf/Pg)	13.9/20.0	Lumber DOL	1.15	BC	0.16	Vert(TL)	n/a	-	n/a	999		
TCDL	10.0	Rep Stress Incr	YES	WB	0.16	Horiz(TL)	0.00	5	n/a	n/a		
BCLL	0.0 *	Code	IRC2018/TPI2014	Matrix-MSH								
BCDL	10.0										Weight: 72 lb	FT = 20%

LUMBER
TOP CHORD 2x4 SP No.2
BOT CHORD 2x4 SP No.2
OTHERS 2x4 SP No.3 *Except* ST2:2x4 SP No.2

BRACING
TOP CHORD Structural wood sheathing directly applied or 6-0-0 oc purlins.
BOT CHORD Rigid ceiling directly applied or 6-0-0 oc bracing.

MiTek recommends that Stabilizers and required cross bracing be installed during truss erection, in accordance with Stabilizer Installation guide.

REACTIONS All bearings 16-2-11.
(lb) - Max Horiz 1=124 (LC 10)
Max Uplift All uplift 100 (lb) or less at joint(s) 1, 6, 9
Max Grav All reactions 250 (lb) or less at joint(s) 1, 5 except 6=471 (LC 25), 8=418 (LC 24), 9=488 (LC 24)

FORCES (lb) - Max. Comp./Max. Ten. - All forces 250 (lb) or less except when shown.
WEBS 2-9=-296/178, 4-6=-287/179

NOTES
1) Unbalanced roof live loads have been considered for this design.
2) Wind: ASCE 7-16; Vult=130mph (3-second gust) Vasd=103mph; TCDL=6.0psf; BCDL=6.0psf; h=25ft; Cat. II; Exp B; Enclosed; MWFRS (envelope) and C-C Exterior(2E) 0-0-5 to 3-0-5, Interior (1) 3-0-5 to 8-1-10, Exterior(2R) 8-1-10 to 11-1-10, Interior (1) 11-1-10 to 15-10-7 zone;C-C for members and forces & MWFRS for reactions shown; Lumber DOL=1.60 plate grip DOL=1.33
3) TCLL: ASCE 7-16; Pr=20.0 psf (roof LL: Lum DOL=1.15 Plate DOL=1.15); Pg=20.0 psf; Pf=13.9 psf (Lum DOL=1.15 Plate DOL=1.15); Is=1.0; Rough Cat B; Fully Exp.; Ce=0.9; Cs=1.00; Ct=1.10
4) Gable requires continuous bottom chord bearing.
5) * This truss has been designed for a live load of 20.0psf on the bottom chord in all areas where a rectangle 3-06-00 tall by 2-00-00 wide will fit between the bottom chord and any other members, with BCDL = 10.0psf.
6) Provide mechanical connection (by others) of truss to bearing plate capable of withstanding 100 lb uplift at joint(s) 1.
7) One RT7A MiTek connectors recommended to connect truss to bearing walls due to UPLIFT at jt(s) 9 and 6. This connection is for uplift only and does not consider lateral forces.
8) This truss is designed in accordance with the 2018 International Residential Code sections R502.11.1 and R802.10.2 and referenced standard ANSI/TPI 1.

LOAD CASE(S) Standard

Job	Truss	Truss Type	Qty	Ply	Sloan-Roof - Bonus
21030004-C	V02	Valley	1	1	Job Reference (optional)

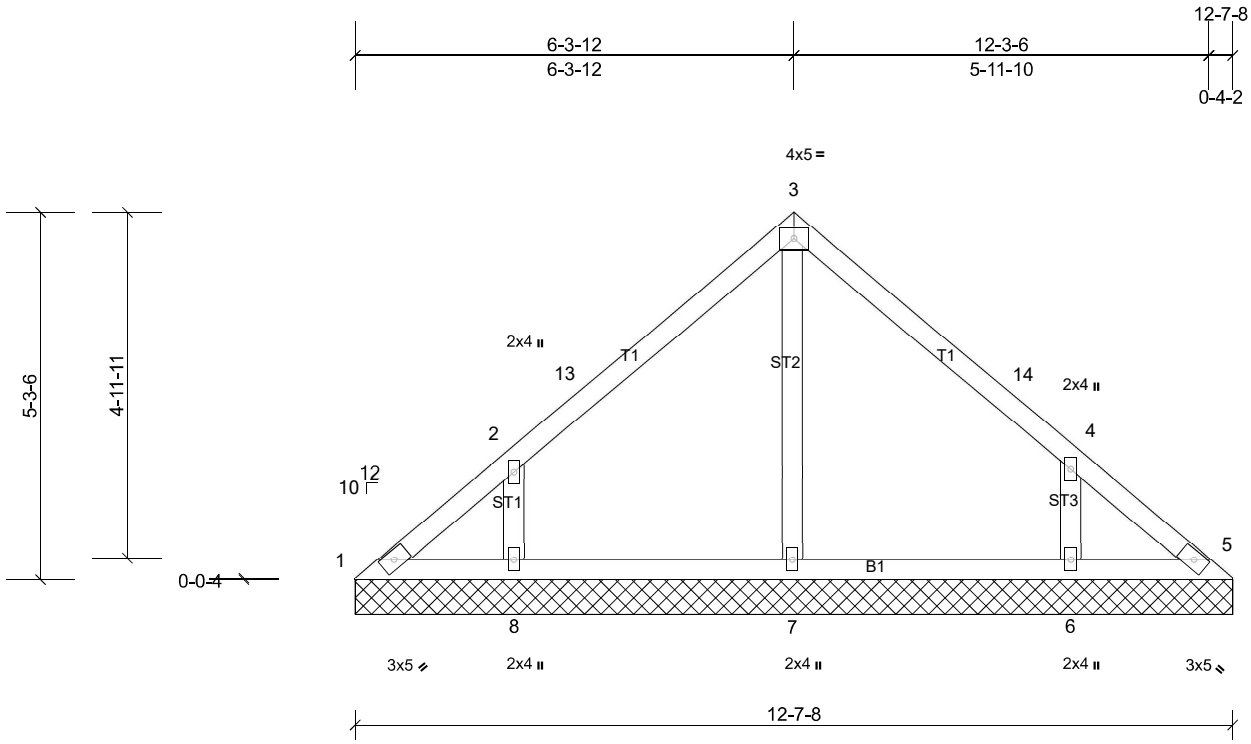

Scale = 1:33.1

Loading	(psf)	Spacing	2-0-0	CSI		DEFL	in	(loc)	l/defl	L/d	PLATES	GRIP
TCLL (roof)	20.0	Plate Grip DOL	1.15	TC	0.19	Vert(LL)	n/a	-	n/a	999	MT20	244/190
Snow (Pf/Pg)	13.9/20.0	Lumber DOL	1.15	BC	0.09	Vert(TL)	n/a	-	n/a	999		
TCDL	10.0	Rep Stress Incr	YES	WB	0.08	Horiz(TL)	0.00	5	n/a	n/a		
BCLL	0.0 *	Code	IRC2018/TPI2014	Matrix-MSH								
BCDL	10.0										Weight: 53 lb	FT = 20%

LUMBER
TOP CHORD 2x4 SP No.2
BOT CHORD 2x4 SP No.2
OTHERS 2x4 SP No.3

BRACING
TOP CHORD Structural wood sheathing directly applied or 6-0-0 oc purlins.
BOT CHORD Rigid ceiling directly applied or 10-0-0 oc bracing.

MiTek recommends that Stabilizers and required cross bracing be installed during truss erection, in accordance with Stabilizer Installation guide.

REACTIONS All bearings 12-7-8.
(lb) - Max Horiz 1=-96 (LC 9)
Max Uplift All uplift 100 (lb) or less at joint(s) 1, 6, 8
Max Grav All reactions 250 (lb) or less at joint(s) 1, 5 except 6=320 (LC 25), 7=252 (LC 2), 8=325 (LC 24)

FORCES (lb) - Max. Comp./Max. Ten. - All forces 250 (lb) or less except when shown.
WEBS 2-8=-258/209, 4-6=-253/205

NOTES
1) Unbalanced roof live loads have been considered for this design.
2) Wind: ASCE 7-16; Vult=130mph (3-second gust) Vasd=103mph; TCDL=6.0psf; BCDL=6.0psf; h=25ft; Cat. II; Exp B; Enclosed; MWFRS (envelope) and C-C Exterior(2E) 0-0-5 to 3-0-5, Interior (1) 3-0-5 to 6-4-1, Exterior(2R) 6-4-1 to 9-4-1, Interior (1) 9-4-1 to 12-7-13 zone;C-C for members and forces & MWFRS for reactions shown; Lumber DOL=1.60 plate grip DOL=1.33
3) TCLL: ASCE 7-16; Pr=20.0 psf (roof LL: Lum DOL=1.15 Plate DOL=1.15); Pg=20.0 psf; Pf=13.9 psf (Lum DOL=1.15 Plate DOL=1.15); Is=1.0; Rough Cat B; Fully Exp.; Ce=0.9; Cs=1.00; Ct=1.10
4) Gable requires continuous bottom chord bearing.
5) * This truss has been designed for a live load of 20.0psf on the bottom chord in all areas where a rectangle 3-06-00 tall by 2-00-00 wide will fit between the bottom chord and any other members.
6) Provide mechanical connection (by others) of truss to bearing plate capable of withstanding 100 lb uplift at joint(s) 1.
7) One RT7A MiTek connectors recommended to connect truss to bearing walls due to UPLIFT at jt(s) 8 and 6. This connection is for uplift only and does not consider lateral forces.
8) This truss is designed in accordance with the 2018 International Residential Code sections R502.11.1 and R802.10.2 and referenced standard ANSI/TPI 1.

LOAD CASE(S) Standard

Job	Truss	Truss Type	Qty	Ply	Sloan-Roof - Bonus
21030004-C	V03	Valley	1	1	Job Reference (optional)

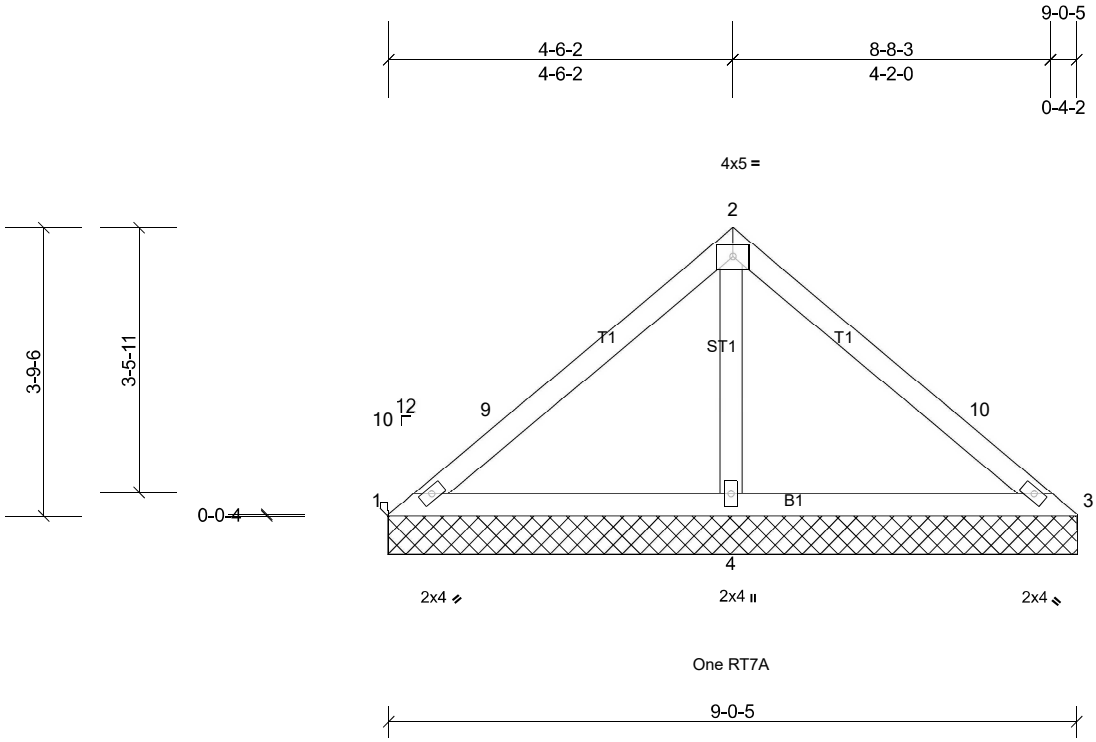

Scale = 1:30.2

Loading	(psf)	Spacing	2-0-0	CSI		DEFL	in	(loc)	l/defl	L/d	PLATES	GRIP
TCLL (roof)	20.0	Plate Grip DOL	1.15	TC	0.23	Vert(LL)	n/a	-	n/a	999	MT20	244/190
Snow (Pf/Pg)	13.9/20.0	Lumber DOL	1.15	BC	0.22	Vert(TL)	n/a	-	n/a	999		
TCDL	10.0	Rep Stress Incr	YES	WB	0.14	Horiz(TL)	0.00	3	n/a	n/a		
BCLL	0.0 *	Code	IRC2018/TPI2014	Matrix-MSH								
BCDL	10.0										Weight: 34 lb	FT = 20%

LUMBER
TOP CHORD 2x4 SP No.2
BOT CHORD 2x4 SP No.2
OTHERS 2x4 SP No.3

BRACING
TOP CHORD Structural wood sheathing directly applied or 9-0-5 oc purlins.
BOT CHORD Rigid ceiling directly applied or 6-0-0 oc bracing.

MiTek recommends that Stabilizers and required cross bracing be installed during truss erection, in accordance with Stabilizer Installation guide.

REACTIONS (lb/size) 1=30/9-0-5, (min. 0-1-8), 3=33/9-0-5, (min. 0-1-8), 4=547/9-0-5, (min. 0-1-8)
Max Horiz 1=-67 (LC 9)
Max Uplift 1=-18 (LC 31), 3=-16 (LC 30), 4=-13 (LC 13)
Max Grav 1=71 (LC 30), 3=74 (LC 31), 4=646 (LC 2)

FORCES (lb) - Max. Comp./Max. Ten. - All forces 250 (lb) or less except when shown.
TOP CHORD 2-9=-99/269, 2-10=-92/265
WEBS 2-4=-485/255

NOTES
1) Unbalanced roof live loads have been considered for this design.
2) Wind: ASCE 7-16; Vult=130mph (3-second gust) Vasd=103mph; TCDL=6.0psf; BCDL=6.0psf; h=25ft; Cat. II; Exp B; Enclosed; MWFRS (envelope) and C-C Exterior(2E) 0-0-5 to 3-0-5, Interior (1) 3-0-5 to 4-6-7, Exterior(2R) 4-6-7 to 7-6-7, Interior (1) 7-6-7 to 9-0-10 zone;C-C for members and forces & MWFRS for reactions shown; Lumber DOL=1.60 plate grip DOL=1.33
3) TCLL: ASCE 7-16; Pr=20.0 psf (roof LL: Lum DOL=1.15 Plate DOL=1.15); Pg=20.0 psf; Pf=13.9 psf (Lum DOL=1.15 Plate DOL=1.15); Is=1.0; Rough Cat B; Fully Exp.; Ce=0.9; Cs=1.00; Ct=1.10
4) Gable requires continuous bottom chord bearing.
5) * This truss has been designed for a live load of 20.0psf on the bottom chord in all areas where a rectangle 3-06-00 tall by 2-00-00 wide will fit between the bottom chord and any other members.
6) Provide mechanical connection (by others) of truss to bearing plate capable of withstanding 18 lb uplift at joint 1 and 16 lb uplift at joint 3.
7) One RT7A MiTek connectors recommended to connect truss to bearing walls due to UPLIFT at jt(s) 4. This connection is for uplift only and does not consider lateral forces.
8) This truss is designed in accordance with the 2018 International Residential Code sections R502.11.1 and R802.10.2 and referenced standard ANSI/TPI 1.

LOAD CASE(S) Standard

Job	Truss	Truss Type	Qty	Ply	Sloan-Roof - Bonus
21030004-C	V04	Valley	1	1	Job Reference (optional)

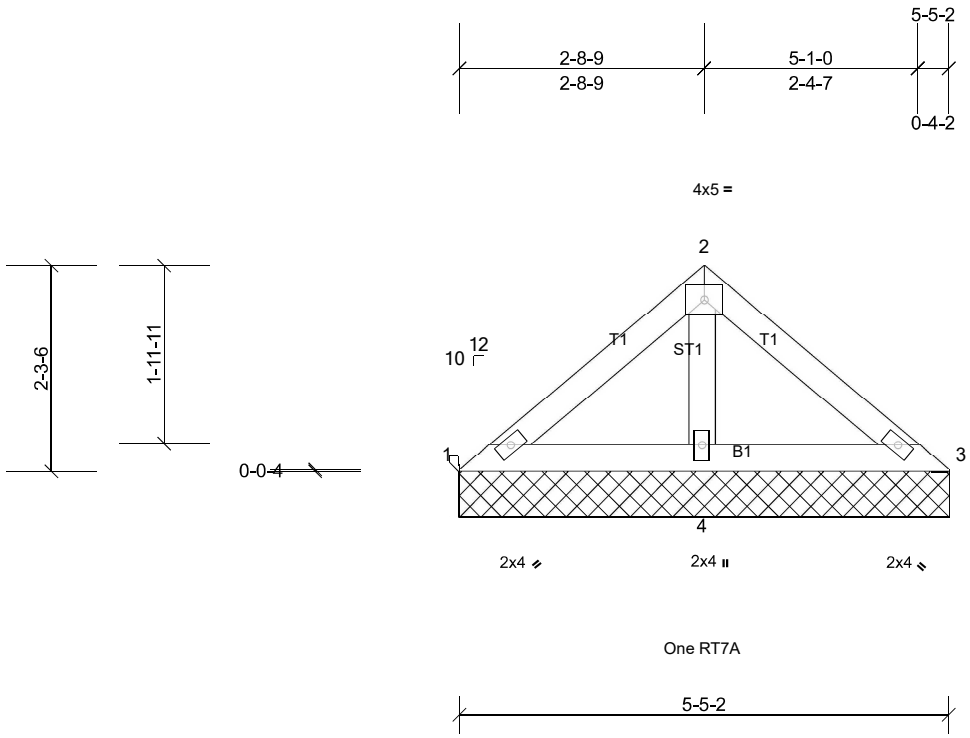

Scale = 1:25.6

Loading	(psf)	Spacing	2-0-0	CSI		DEFL	in	(loc)	l/defl	L/d	PLATES	GRIP
TCLL (roof)	20.0	Plate Grip DOL	1.15	TC	0.08	Vert(LL)	n/a	-	n/a	999	MT20	244/190
Snow (Pf/Pg)	13.9/20.0	Lumber DOL	1.15	BC	0.09	Vert(TL)	n/a	-	n/a	999		
TCDL	10.0	Rep Stress Incr	YES	WB	0.04	Horiz(TL)	0.00	3	n/a	n/a		
BCLL	0.0 *	Code	IRC2018/TPI2014	Matrix-MP								
BCDL	10.0										Weight: 20 lb	FT = 20%

LUMBER

TOP CHORD	2x4 SP No.2
BOT CHORD	2x4 SP No.2
OTHERS	2x4 SP No.3

BRACING

TOP CHORD	Structural wood sheathing directly applied or 5-5-2 oc purlins.
BOT CHORD	Rigid ceiling directly applied or 6-0-0 oc bracing.

MiTek recommends that Stabilizers and required cross bracing be installed during truss erection, in accordance with Stabilizer Installation guide.

REACTIONS (lb/size) 1=41/5-5-2, (min. 0-1-8), 3=44/5-5-2, (min. 0-1-8), 4=283/5-5-2, (min. 0-1-8)
Max Horiz 1=-39 (LC 11)
Max Uplift 4=-1 (LC 13)
Max Grav 1=63 (LC 30), 3=66 (LC 31), 4=334 (LC 2)

FORCES (lb) - Max. Comp./Max. Ten. - All forces 250 (lb) or less except when shown.

NOTES

1) Unbalanced roof live loads have been considered for this design.
2) Wind: ASCE 7-16; Vult=130mph (3-second gust) Vasd=103mph; TCDL=6.0psf; BCDL=6.0psf; h=25ft; Cat. II; Exp B; Enclosed; MWFRS (envelope) and C-C Exterior(2E) zone;C-C for members and forces & MWFRS for reactions shown; Lumber DOL=1.60 plate grip DOL=1.33
3) TCLL: ASCE 7-16; Pr=20.0 psf (roof LL: Lum DOL=1.15 Plate DOL=1.15); Pg=20.0 psf; Pf=13.9 psf (Lum DOL=1.15 Plate DOL=1.15); Is=1.0; Rough Cat B; Fully Exp.; Ce=0.9; Cs=1.00; Ct=1.10
4) Gable requires continuous bottom chord bearing.
5) * This truss has been designed for a live load of 20.0psf on the bottom chord in all areas where a rectangle 3-06-00 tall by 2-00-00 wide will fit between the bottom chord and any other members.
6) One RT7A MiTek connectors recommended to connect truss to bearing walls due to UPLIFT at jt(s) 4. This connection is for uplift only and does not consider lateral forces.
7) This truss is designed in accordance with the 2018 International Residential Code sections R502.11.1 and R802.10.2 and referenced standard ANSI/TPI 1.

LOAD CASE(S) Standard