NORTH CAROLINA
50' SERIES
PLAN 243.2939-R

LOT 15 - HIGHLAND GROVE - ELEVATION D

SHEET INDEX

PLAN #243.2939-R

TS TITLE SHEET
GN1 GENERAL NOTES
GN2 GENERAL NOTES
GN3 GENERAL NOTES

1.1 FIRST FLOOR PLAN 'A'
1.2 SECOND FLOOR PLAN 'A'
1.3 SECOND FLOOR PLAN 'A' W/ CRAWLSPACE OPTION
1.4 ALTERNATE SECOND FLOOR PLAN OPTION
1.5 FLOOR PLAN OPTIONS
1.6 FLOOR PLAN OPTIONS (2)

2.1 SLAB INTERFACE PLAN 'A'
2.2 PARTIAL SLAB INTERFACE PLAN 'B', & 'C'
2.3 PARTIAL SLAB INTERFACE PLAN 'D'
2.4 CRAWL SPACE FOUNDATION PLAN & OPTIONS 'A'
2.5 PARTIAL CRAWL SPACE FOUNDATION PLANS & OPTIONS 'B' & 'C'
2.6 PARTIAL CRAWL SPACE FOUNDATION PLANS & OPTIONS 'D'

EXTERIOR ELEVATIONS

3.A1 ROOF PLAN, FRONT & REAR ELEVATIONS 'A'
3.A2 LEFT & RIGHT ELEVATIONS 'A'
3.A3 PARTIAL FIRST FLOOR PLAN, FRONT & LEFT ELEVATIONS 'A' AT CRAWL SPACE
PARTIAL FRONT & LEFT ELEVATIONS W/ OPTIONAL MASONRY AT CONCRETE PORCH
3.A4 FRONT ELEVATIONS 'A' AT OPTIONAL 9'-1" PLATE HEIGHT
3.A5 FRONT ELEVATIONS 'A' W/ BRICK OPTION & PARTIAL RIGHT ELEVATION
3.A6 FRONT ELEVATIONS 'A' W/ BRICK AT OPTIONAL 9'-1" PLATE HEIGHT

3.B1 PARTIAL FIRST & SECOND FLOOR PLANS 'B'
3.B2 ROOF PLAN, FRONT & REAR ELEVATIONS 'B'
3.B3 LEFT & RIGHT ELEVATIONS 'B'
3.B4 PARTIAL FIRST FLOOR PLAN, FRONT & LEFT ELEVATIONS 'B' AT CRAWL SPACE
PARTIAL FRONT ELEVATION W/ OPTIONAL MASONRY AT CONCRETE PORCH
3.B5 FRONT ELEVATIONS 'B' AT OPTIONAL 9'-1" PLATE HEIGHT
3.B6 FRONT ELEVATIONS 'B' W/ STONE OPTION & PARTIAL RIGHT ELEVATION
3.B7 FRONT ELEVATIONS 'B' W/ STONE AT OPTIONAL 9'-1" PLATE HEIGHT

3.C1 PARTIAL FIRST & SECOND FLOOR PLANS 'C'
3.C2 ROOF PLAN, FRONT & REAR ELEVATIONS 'C'
3.C3 LEFT & RIGHT ELEVATIONS 'C'
3.C4 PARTIAL FIRST FLOOR PLAN, FRONT & LEFT ELEVATIONS 'C' AT CRAWL SPACE
PARTIAL FRONT & LEFT ELEVATIONS W/ OPTIONAL MASONRY AT CONCRETE PORCH
3.C5 FRONT ELEVATIONS 'C' AT OPTIONAL 9'-1" PLATE HEIGHT
3.C6 FRONT ELEVATIONS 'C' W/ STONE OPTION & PARTIAL RIGHT ELEVATION
3.C7 FRONT ELEVATIONS 'C' W/ STONE AT OPTIONAL 9'-1" PLATE HEIGHT

3.D1 PARTIAL FIRST & SECOND FLOOR PLANS 'D'
3.D2 ROOF PLAN, FRONT & REAR ELEVATIONS 'D'
3.D3 LEFT & RIGHT ELEVATIONS 'D'
3.D4 PARTIAL FIRST FLOOR PLAN, FRONT & LEFT ELEVATIONS 'D' AT CRAWL SPACE
PARTIAL FRONT ELEVATION W/ OPTIONAL MASONRY AT CONCRETE PORCH
3.D5 FRONT ELEVATIONS 'D' AT OPTIONAL 9'-1" PLATE HEIGHT
3.D6 FRONT ELEVATIONS 'D' W/ STONE OPTION & PARTIAL RIGHT ELEVATION
3.D7 FRONT ELEVATIONS 'D' W/ STONE AT OPTIONAL 9'-1" PLATE HEIGHT

4.1 INTERIOR ELEVATIONS
4.2 SECTIONS
4.2 SECTIONS W/ CRAWLSPACE OPTION

5.1 FIRST FLOOR UTILITY PLAN
5.2 SECOND FLOOR UTILITY PLAN
5.3 ALTERNATE SECOND FLOOR PLAN AND OPTIONS
5.4 FIRST FLOOR UTILITY PLAN OPTIONS
5.5 FIRST FLOOR UTILITY PLAN OPTIONS
5.6 SECOND FLOOR UTILITY PLAN OPTIONS (2)

7.1 PARTIAL PLANS & ELEVATIONS 'X/Y/Z' W/ OPT. 12'x26' DECK AT CRAWL SPACE

8.1 PARTIAL PLANS, ROOF & ELEVATIONS 'X/Y/Z' W/ OPT. 12'x12'-8" SCREENED-IN COVERED DECK AT CRAWL SPACE
8.2 PARTIAL PLANS, ROOF & ELEVATIONS 'X/Y/Z' W/ OPT. 12'x26' SCREENED-IN COVERED DECK AT CRAWL SPACE
8.3 PARTIAL PLANS, ROOF & ELEVATIONS 'X/Y/Z' W/ OPT. 12'x12'-8" SCREENED-IN COVERED DECK W/ 12'x13'-4" DECK AT CRAWL SPACE
8.4 PARTIAL PLANS, ROOF & ELEVATIONS 'X/Y/Z' W/ OPT. 12'x19' SCREENED-IN COVERED DECK AT CRAWL SPACE
8.5 PARTIAL PLANS, ROOF & ELEVATIONS 'X/Y/Z' W/ OPT. 12'x12-8' SCREENED-IN COVERED DECK AT CRAWL SPACE
8.6 PARTIAL PLANS, ROOF & ELEVATIONS 'X/Y/Z' W/ OPT. 12'X26' SCREENED-IN COVERED PATIO
8.7 PARTIAL PLANS, ROOF & ELEVATIONS 'X/Y/Z' W/ OPT. 12'X12'-8" SCREENED-IN COVERED PATIO (3)

9.1 PARTIAL PLANS & ELEVATIONS 'X/Y/Z' W/ OPT. SUNROOM AT CRAWL SPACE

AD1 ARCHITECTURAL DETAILS
AD2 ARCHITECTURAL DETAILS
AD3 ARCHITECTURAL DETAILS
AD4 ARCHITECTURAL DETAILS
AD5 ARCHITECTURAL DETAILS
AD6 ARCHITECTURAL DETAILS
AD7 ARCHITECTURAL DETAILS
AD8 ARCHITECTURAL DETAILS

ABBREVIATIONS

ABV.	ABOVE	G.F.I.	GROUND-FAULT CIRCUIT INTERRUPTER	R.O.	ROUGH OPENING
A/C	AIR CONDITIONING			S & P	SHELF AND POLE
ADJ.	ADJUSTABLE	G.I.	GALVANIZED IRON	S.C.	SOLID CORE
ALT	ALTERNATE	GL.	GLASS	S.D.	SMOKE DETECTOR
AMP.	AMPERAGE	GYP. BD.	GYPSUM BOARD	SEC.	SECTION
BD.	BOARD	H.C.	HOLLOW CORE	S.H.	SINGLE HUNG
℄	CENTER LINE	HDR.	HEADER	SHT.	SHEET
CAB.	CABINET	HGT. / HT.	HEIGHT	SHTHG.	SHEATHING
CLG.	CEILING	H.H.	HEADER HEIGHT	SHWR.	SHOWER
CLR.	CLEAR	HS	HORIZONTAL SLIDER	SIM.	SIMILAR
CONC.	CONCRETE			SL.	SLIDING
CPT.	CARPET	I.L.O.	IN LIEU OF	SL. GL.	SLIDING GLASS
C.T.	CERAMIC TILE	INSUL.	INSULATION	STD.	STANDARD
D.	DRYER	INT.	INTERIOR	S.V.	SHEET VINYL
DBL.	DOUBLE	LAM.	LAMINATED	TEMP.	TEMPERED GLASS
D.G.	DUAL GLAZED	LAV.	LAVATORY	THK.	THICK
DIA.	DIAMETER	LUM.	LUMINOUS	T.O.C.	TOP OF CURB
DIM.	DIMENSION	M.C.	MEDICINE CABINET	T.O.P.	TOP OF PLATE
DISP.	DISPOSAL	MFR.	MANUFACTURER	T.O.S.	TOP OF SLAB
D.L.	DIVIDED LIGHT	MIN.	MINIMUM	TYP.	TYPICAL
DP.	DEEP	MTD.	MOUNTED	U.N.O.	UNLESS NOTED OTHERWISE
DR.	DOOR	MTL.	METAL		
D.S.	DOWNSPOUT	N.I.C.	NOT IN CONTRACT	V.P.	VAPOR PROOF
DTL.	DETAIL	N.T.S.	NOT TO SCALE	W.	WASHER
D.W.	DISHWASHER	O/	OVER	W/	WITH
EA.	EACH	O.C.	ON CENTER	WD.	WOOD
ELEV.	ELEVATION	OPT.	OPTIONAL	WDW.	WINDOW
EQ.	EQUAL	O.S.A.	OUTSIDE AIR	W/H	WATER HEATER
EXH.	EXHAUST	℘	PROPERTY LINE	W.I.	WROUGHT IRON
EXT.	EXTERIOR	P.B.	PUSH BUTTON	W.P.	WEATHER PROOF
FAU	FORCED AIR UNIT	PH.	PHONE		
F.C.	FIBER CEMENT	PLT.	PLATE		
F.G./FX.	FIXED GLASS	PLYWD.	PLYWOOD		
F.G.	FUEL GAS	PR.	PAIR		
FIN.	FINISH	P.T.D.F.	PRESSURE TREATED DOUGLAS FIR		
FLR.	FLOOR				
FLR. LINE	FLOOR LINE	R.	RISER		
FLUOR.	FLUORESCENT	RAD.	RADIUS		
FR. DR.	FRENCH DOOR	R.A.G.	RETURN AIR GRILL		
F.M.C.	FLOOR MATERIAL CHANGE	REF.	REFRIGERATOR		
FTG.	FOOTING	RE/S	RE-SAWN		
GA.	GAUGE	REV.	REVERSE		
GAR. DISP.	GARBAGE DISPOSAL	RM.	ROOM		

ARCH. SYMBOLS

BUILDING SECTION
A — SECTION INDICATOR
#.# — SHEET NUMBER

DETAIL REFERENCE
— DETAIL NUMBER
AD1 — SHEET NUMBER

KEYNOTE REFERENCE
— REFERENCE NUMBER

OFFSET REFERENCE
#'' — DIFFERENTIAL IN FLOOR LEVEL. OR FINISH SURFACE

REVISION REFERENCE
— REVISION NUMBER
REFER TO TITLE SHEET

SCALE NOTE

IF BOX IS 1" SQ. THEN SCALE IS 1/4" = 1'-0"
IF BOX IS 1/2" SQ. THEN SCALE IS 1/8" = 1'-0"

CONSULTANTS

OWNER :
KB HOME
NORTH CAROLINA DIVISION
4518 S. MIAMI BLVD., SUITE 180
DURHAM, NC 27703
TEL. (919) 768-7988
FAX. (919) 472-0582

STRUCTURAL ENGINEER :
SUMMIT ENGINEERING
120 PENNARC DRIVE, SUITE 108
RALEIGH NC, 27603
TEL. (919) 380-9991
FAX. (919) 380-9993

TRUSS DESIGN
BUILDERS FIRST SOURCE

SQUARE FOOTAGE

PLAN 243.2939-R			
FIRST FLOOR AREA		1779	SQ. FT.
SECOND FLOOR AREA		1160	SQ. FT.
TOTAL AREA		2939	SQ. FT.
GRAWL GAR. AREA		437	SQ. FT.
PORCH AREA(S)			
	ELEVATION 'A'	42	SQ. FT.
	ELEVATION 'B'	71	SQ. FT.
	ELEVATION 'C'	86	SQ. FT.
	ELEVATION 'D'	128	SQ. FT.
DECK AREA(S) (4)			
	OPEN 12'x12'	144	SQ. FT.
	OPEN 12'x26'	312	SQ. FT.
	SCREENED-IN 12'x12'-8"	152	SQ. FT.
	SCREENED-IN 12'x26'	312	SQ. FT.
SUNROOM AREA(S)			
	12'X12'-8"	152	SQ. FT.

NOTES

ALL EXPOSED PORTIONS OF CONCRETE SLAB FOUNDATIONS ARE TO BE 'PARGED'.

CODE INFORMATION

APPLICABLE CODES: (1)
2018 NORTH CAROLINA STATE BUILDING CODE: RESIDENTIAL CODE, INCLUDING REFERENCED CODES AND STANDARDS

PROJECT DESCRIPTION:
2 STORY SINGLE FAMILY DETACHED RESIDENTIAL PLAN W/ 4 ELEVATIONS

OCCUPANCY:
R3

CONSTRUCTION TYPE:
V - B

CODE ABBREVIATIONS

N.C.-R.	NORTH CAROLINA RESIDENTIAL CODE
N.C.-B.	NORTH CAROLINA BUILDING CODE
N.C.-M.	NORTH CAROLINA MECHANICAL CODE
N.C.-P.	NORTH CAROLINA PLUMBING CODE
N.C.-F.	NORTH CAROLINA FUEL GAS CODE
N.C.-E.	NORTH CAROLINA ELECTRICAL
N.C.-E.C.	NORTH CAROLINA ENERGY CODE
N.E.C.	NATIONAL ELECTRICAL CODE
I.C.B.O.	INTERNATIONAL CONFERENCE OF BUILDING OFFICIALS
A.S.T.M.	AMERICAN SOCIETY FOR TESTING MATERIALS
N.F.P.A.	NATIONAL FIRE PROTECTION ASSOCIATION
A.N.S.I.	AMERICAN NATIONAL STANDARDS INSTITUTE
I.E.C.C.	INTERNATIONAL ENERGY CONSERVATION CODE
I.C.C.	INTERNATIONAL CODE COUNCIL
U.L.	UNDERWRITERS LABORATORIES, INC.

REVISION LIST

DELTA	DATE	SHEETS REVISED	LOG NUMBER
1	03/15/19	T.S., GN1. GN2, GN3, 3.A1, 3.B2, 3.C1, 3.C2, 3.D2, 5.1 - 5.3, 8.1 - 8.3, 9.1	NC19015NCP
2	03/15/19	T.S., 1.4, 1.5, 4.1, 5.3, 5.4	NC19022NCP
3	04/22/19	T.S., 8.6, 8.7	NC19028NCP
4	08/01/19	T.S., 1.4, 5.3	NC19047NCP
5	11/02/20	T.S., 1.1, 1.2, 1.3, 1.4, 1.5, 1.6, 3.A1-3.D5	NC20038NCP

NORTH CAROLINA
50' SERIES
KB HOME
NORTH CAROLINA DIVISION
4518 S. MIAMI BLVD.
SUITE 180
DURHAM, NC 27703
TEL: (919) 768-7988
FAX: (919) 472-0582

2018 NORTH CAROLINA STATE BUILDING CODES

ISSUE DATE: 09/11/18
PROJECT No.: 1350999:57
DIVISION MGR.: MP
REVISIONS: 08/01/19

(1) 2018 CODE UPDATE NC19015NCS/ 03/15/19 / CTD
(2) DIVISION REVISIONS NC19022NCP/ 03/15/19 / CTD
(3) DIVISION REVISIONS NC19028NCP/ 04/22/19 / FAE
(4) DIVISION REVISIONS NC19047NCP/ 08/01/19 / FAE
(5) DIVISION REVISIONS NC20038NCP/ 10/29/20 / KBA

PLAN: 243.2939-R
SHEET: TS

SPEC. LEVEL 1
RALEIGH-DURHAM
50' SERIES

These designs and drawings are CONFIDENTIAL, and the exclusive property of KB Home Corporation and are not to be disclosed without the express permission of KB Home Corporation. They may not be used or duplicated without the express permission of KB Home Corporation. Copyright 2014 © KB Home Corporation, all rights reserved.

GENERAL REQUIREMENTS

1. THE WORD 'CONTRACTOR' AS USED HEREIN SHALL MEAN THE GENERAL CONTRACTOR, SUBCONTRACTORS AND ALL PERSONS DIRECTLY OR INDIRECTLY EMPLOYED BY ANY OF THEM.

2. CONTRACTOR SHALL PERFORM THE WORK IN ACCORDANCE WITH THE FOLLOWING APPLICABLE CODE REQUIREMENTS:

   A. ALL LAWS, STATUTES, THE MOST RECENT BUILDING CODES, ORDINANCES, RULES, REGULATIONS, AND LAWFUL ORDERS OF ALL PUBLIC AUTHORITIES HAVING JURISDICTION OVER OWNER, CONTRACTOR, ANY SUBCONTRACTOR, THE PROJECT, THE PROJECT SITE, THE WORK, OR THE PROSECUTION OF THE WORK.

   B. THE FEDERAL OCCUPATIONAL SAFETY AND HEALTH ACT AND ALL OTHER APPLICABLE CODE REQUIREMENTS RELATING TO SAFETY.

   C. THE FAIR HOUSING AMENDMENTS ACT, THE AMERICANS WITH DISABILITIES ACT, AND ALL OTHER APPLICABLE CODE REQUIREMENTS RELATING THERETO.

3. CONTRACTOR SHALL CAREFULLY STUDY AND REVIEW THE CONSTRUCTION DOCUMENTS AND INFORMATION FURNISHED BY OWNER, AND SHALL PROMPTLY REPORT IN WRITING TO OWNER'S REPRESENTATIVE ANY ERRORS, INCONSISTENCIES, OR OMISSIONS IN THE CONSTRUCTION DOCUMENTS OR INCONSISTENCIES WITH APPLICABLE CODE REQUIREMENTS OBSERVED BY THE CONTRACTOR.

4. IF CONTRACTOR PERFORMS WORK WHICH HE KNOWS OR SHOULD KNOW IS CONTRARY TO APPLICABLE CODE REQUIREMENTS, WITHOUT THE AGREEMENT OF OWNER, CONTRACTOR SHALL BE RESPONSIBLE FOR SUCH WORK AND SHALL BEAR THE RESULTANT LOSSES, INCLUDING, WITHOUT LIMITATION, THE COSTS OF CORRECTING DEFECTIVE WORK.

5. CONTRACTOR SHALL PROVIDE CERTIFICATES OF INSURANCE ACCEPTABLE TO OWNER PRIOR TO COMMENCEMENT OF WORK.

6. CONTRACTOR SHALL TAKE FIELD MEASUREMENTS, VERIFY FIELD CONDITIONS, AND CAREFULLY COMPARE WITH THE CONSTRUCTION DOCUMENTS SUCH FIELD MEASUREMENTS, CONDITIONS, AND OTHER INFORMATION KNOWN TO CONTRACTOR BEFORE COMMENCING THE WORK. ERRORS, INCONSISTENCIES, OR OMISSIONS DISCOVERED AT ANY TIME SHALL BE PROMPTLY REPORTED IN WRITING TO THE OWNER.

7. CONTRACTOR SHALL PROMPTLY NOTIFY OWNER'S REPRESENTATIVE IF CONTRACTOR BECOMES AWARE DURING THE PERFORMANCE OF THE WORK THAT THE CONSTRUCTION DOCUMENTS ARE NOT IN COMPLIANCE WITH APPLICABLE CODE REQUIREMENTS.

8. BY SUBMITTAL OF BID, CONTRACTOR WARRANTS TO OWNER THAT ALL MATERIALS AND EQUIPMENT TO BE FURNISHED ARE NEW UNLESS NOTED OTHERWISE AND ALL WORK WILL BE OF GOOD QUALITY AND FREE FROM FAULTS AND DEFECTS.

9. SUB-CONTRACTORS SHALL INSURE THAT ALL WORK IS DONE IN A PROFESSIONAL WORKMANLIKE MANNER BY SKILLED MECHANICS AND SHALL REPLACE ANY MATERIALS OR ITEMS DAMAGED BY SUB-CONTRACTOR'S PERFORMANCE. SUB-CONTRACTORS AND SUPPLIERS ARE HEREBY NOTIFIED THAT THEY ARE TO CONFER AND COOPERATE FULLY WITH EACH OTHER DURING THE COURSE OF CONSTRUCTION TO DETERMINE THE EXACT EXTENT AND OVERLAP OF EACH OTHER'S WORK AND TO SUCCESSFULLY COMPLETE THE EXECUTION OF THE WORK. ALL SUB-CONTRACTOR WORKMANSHIP SHALL BE OF QUALITY TO PASS INSPECTIONS BY LOCAL AUTHORITIES, LENDING INSTITUTIONS, ARCHITECT OR BUILDER. ANY ONE OR ALL OF THE ABOVE MENTIONED INSPECTORS MAY INSPECT WORKMANSHIP AT ANY TIME, AND CORRECTIONS NEEDED TO ENHANCE THE QUALITY OF BUILDING WILL BE DONE IMMEDIATELY. EACH SUBCONTRACTOR, UNLESS SPECIFICALLY EXEMPTED BY THE TERMS OF HIS/HERS SUB-CONTRACT AGREEMENT, SHALL BE RESPONSIBLE FOR CLEANING UP AND REMOVING FROM THE JOB SITE ALL TRASH AND DEBRIS NOT LEFT BY OTHER SUB-CONTRACTORS. BUILDER WILL DETERMINE HOW SOON AFTER SUBCONTRACTOR COMPLETES EACH PHASE OF HIS WORK THAT TRASH AND DEBRIS WILL BE REMOVED FROM THE SITE.

10. APPROVAL BY THE BUILDING INSPECTOR DOES NOT MEAN APPROVAL OR ALLOWABLE FAILURE TO COMPLY WITH THE PLANS AND SPECIFICATIONS. ANY DESIGN WHICH FAILS TO BE CLEAR OR IS AMBIGUOUS MUST BE REFERRED TO THE ARCHITECT OR ENGINEER FOR INTERPRETATION OR CLARIFICATION.

11. ALL EQUIPMENT AND MATERIALS FURNISHED AND INSTALLED UNDER THESE PLANS SHALL BE GUARANTEED BY THE CONTRACTOR FOR A PERIOD OF ONE YEAR FROM THE DATE OF ACCEPTANCE OF THE WORK BY OWNER UNLESS STIPULATED OTHERWISE.

12. ALL TRADE NAMES AND BRAND NAMES CONTAINED HEREIN ESTABLISH QUALITY STANDARDS. SUBSTITUTIONS ARE PERMITTED, WITH PRIOR APPROVAL BY THE OWNER'S REPRESENTATIVE. THE CONTRACTOR SHALL SUBMIT FOR THE ARCHITECT'S AND BUILDER'S APPROVAL ALL MATERIALS OR EQUIPMENT WHICH IS CONSIDERED "OR EQUAL" TO THAT SPECIFIED.

13. CONSTRUCTION DOCUMENTS IDENTIFIED AS "BID SET" ON ANY OR ALL SHEETS MAY BE SUBJECT TO REVIEW. THIS REVIEW MAY RESULT IN CHANGES WHICH MAY BE MADE TO THE PLANS PRIOR TO THE ISSUANCE OF THE FINAL CONSTRUCTION SET WHICH WILL CONTAIN NO "BID SET" DESIGNATIONS. CONSTRUCTION DOCUMENTS IDENTIFIED AS "BID SET" ARE NOT TO BE CONSTRUED AS BEING THE COMPLETED OR FINAL DRAWINGS AND THEY SHOULD NOT IN ANY WAY BE USED AS SUCH.

14. ALL STANDARD NOTES CONTAINED HEREIN ARE TYPICAL UNLESS NOTED OTHERWISE.

15. TYPICAL DETAILS AND SPECIFICATIONS ARE MINIMUM REQUIREMENTS TO BE USED WHEN CONDITIONS ARE NOT SHOWN OTHERWISE.

16. SPECIFIC NOTES AND DETAILS ON DRAWINGS SHALL TAKE PRECEDENCE OVER GENERAL NOTES AND TYPICAL DETAILS. WHERE NO DETAILS ARE SHOWN CONSTRUCTION SHALL CONFORM TO SIMILAR WORK ON THE PROJECT.

17. SEE ARCHITECTURAL, STRUCTURAL, ELECTRICAL, AND MECHANICAL DRAWINGS FOR PITS, TRENCHES, ROOF OPENINGS, DEPRESSIONS, ETC. NOT SHOWN ON THE OTHER DRAWINGS.

18. THE CONSTRUCTION DOCUMENTS AND ALL COPIES THEREOF FURNISHED TO CONTRACTOR ARE THE PROPERTY OF THE ARCHITECT AND ARE NOT TO BE USED ON OTHER WORK.

SITE WORK

1. CONTRACTOR SHALL INVESTIGATE SITE DURING CLEARING AND EARTHWORK OPERATIONS FOR FILLED EXCAVATIONS OR BURIED STRUCTURES SUCH AS CESSPOOLS, CISTERNS, FOUNDATIONS, ETC., AND BURIED ARTIFACTS SUCH AS INDIAN OR DINOSAUR BONES. IF ANY SUCH ITEMS ARE FOUND THE ARCHITECT, CIVIL ENGINEER, AND SOILS ENGINEER SHALL BE NOTIFIED IMMEDIATELY.

2. CONTRACTOR SHALL TAKE ALL NECESSARY MEASURES TO FULLY PROTECT ADJACENT PROPERTIES.

3. REFER TO THE SOILS REPORT AS PREPARED BY THE GEOTECHNICAL ENGINEER.

4. REFER TO CIVIL ENGINEER'S CURRENT GRADING AND PLOT PLANS.

SITE WORK (continued)

5. REFER TO THE LANDSCAPE ARCHITECT'S CURRENT GRADING PLAN AND CONSTRUCTION DOCUMENTS.

6. ALL FOOTINGS SHALL REST ON FIRM NATURAL SOIL OR APPROVED COMPACTED FILL. REFER TO GEOTECHNICAL REPORT.

7. EXCAVATIONS FOR FOOTINGS SHALL BE MADE TO THE WIDTH, LENGTH, AND DEPTH REQUIRED AND FINISHED WITH LEVEL BOTTOMS.

8. EXCAVATIONS SHALL BE KEPT FREE OF STANDING WATER.

9. WHERE EXCAVATIONS ARE MADE TO A DEPTH GREATER THAN INDICATED, SUCH ADDITIONAL DEPTH SHALL BE FILLED WITH CONCRETE AS SPECIFIED FOR FOOTINGS.

10. FILL MATERIALS SHALL BE FREE FROM DEBRIS, VEGETABLE MATTER AND OTHER FOREIGN SUBSTANCES.

11. ALL FINISH GRADES TO DRAIN AWAY FROM THE BUILDING FOOTINGS.

12. THERE SHALL BE NO ON-SITE WATER RETENTION.

13. THERE SHALL BE NO DRAINAGE TO ADJACENT PROPERTY.

14. FOR ONSITE CONTSRUCTION, PLANS TO COMPLY WITH NECESSARY INSPECTIONS APPROVED BY THE BUILDING OFFICIAL.

15. THE REQUIREMENTS IN THESE NOTES ARE THE MINIMUM THAT SHALL BE MET. REQUIREMENTS OF THE STRUCTURAL DRAWINGS THAT EXCEED THE REQUIREMENTS SHOWN HERE SHALL BE MET.

CONCRETE

1. REFER TO STRUCTURAL ENGINEERING CALCULATIONS AND SOILS REPORT FOR THE PERFORMANCE REQUIREMENTS FOR CONCRETE FOUNDATIONS.

2. CONCRETE SHALL BE PROPORTIONED TO PROVIDE AN AVERAGE COMPRESSIVE STRENGTH AS PRESCRIBED IN THE N.C.-R, AS WELL AS SATISFY THE DURABILITY CRITERIA OF THE N.C.-R

3. MIXING OF CONCRETE SHALL BE PERFORMED IN ACCORDANCE WITH ACI 318, SECTION 5.8.

4. THE DEPOSITING OF CONCRETE SHALL COMPLY WITH THE PROVISIONS ACI 318, SECTION 5.10.

5. THE CURING OF CONCRETE SHALL BE IN ACCORDANCE WITH ACI 318, SECTION 5.11.

6. ALL FORM WORK SHALL BE DESIGNED, CONSTRUCTED, UTILIZED, AND REMOVED.

7. CONDUIT, PIPES AND SLEEVES OF ANY MATERIAL NOT HARMFUL TO CONCRETE AND WITHIN THE LIMITATIONS OF ACI 318, SECTION 6.3, ARE PERMITTED TO BE EMBEDDED IN CONCRETE WITH APPROVAL OF THE REGISTERED DESIGN PROFESSIONAL.

8. CONSTRUCTION JOINTS INCLUDING THEIR LOCATION SHALL COMPLY WITH THE PROVISIONS OF ACI 318, SECTION 6.4.

9. ALL STEEL REINFORCING OF CONCRETE SHALL BE DONE IN ACCORDANCE WITH THE N.C.-R

10. TOP OF CONCRETE SLABS TO BE A MINIMUM 4" W/ MASONRY VENEER 6" ELSEWHERE (8" H.U.D.) ABOVE FINISH GRADE.

11. FOUNDATION WIDTHS, DEPTHS, AND REINFORCING, AS SHOWN ON PLANS, ARE SUPERCEDED BY ANY LOCAL CODES OR ORDINANCES WHICH REQUIRE INCREASES OF THE SAME.

12. ALL REINFORCEMENT, CONDUIT, OUTLET BOXES, ANCHORS, HANGERS, SLEEVES, BOLTS OR OTHER EMBEDDED MATERIALS AND ITEMS MUST BE SECURED AND APPROPRIATELY FASTENED IN THEIR PROPER LOCATIONS PRIOR TO THE PLACEMENT OF CONCRETE. SUB-CONTRACTOR SHALL VERIFY INSTALLATION OF HOLD-DOWNS, ANCHOR BOLTS, PA STRAPS, AND OTHER ANCHORAGE MATERIAL AND ITEMS PRIOR TO PLACEMENT OF CONCRETE.

13. POST-TENSION SLABS, IF APPLICABLE:

   A. POINT AND LINE LOADS FROM STRUCTURE ABOVE TO BE PROVIDED TO POST-TENSION ENGINEER PRIOR TO POST-TENSION DESIGN.

   B. ANCHOR BOLTS AND OTHER HARDWARE TO BE SHOWN ON POST-TENSION PLANS TO AVOID MIS-LOCATION OF HARDWARE AND POSSIBLE FIELD FIXES WHICH MAY CUT TENDONS.

MASONRY

1. ALL MASONRY DESIGN SHALL FOLLOW THE REQUIREMENTS OF THE CURRENT ADOPTED CODES.

2. ANCHORED MASONRY VENEER SHALL COMPLY WITH THE PROVISIONS OF N.C.-R, AND SECTIONS 6.1 AND 6.2 OF ACI 530/ASCE 5/TMS 402.

3. STONE VENEER UNITS NOT EXCEEDING 5 INCHES IN THICKNESS SHALL BE ANCHORED DIRECTLY TO MASONRY, CONCRETE OR TO STUD CONSTRUCTION BY ONE OF THE APPROVED METHODS LISTED IN THE N.C.-R

4. MORTAR FOR USE IN MASONRY CONSTRUCTION SHALL COMPLY WITH ASTM C 270. THE TYPE OF MORTAR SHALL BE IN ACCORDANCE WITH THE N.C.-R AND SHALL MEET THE PROPORTION SPECIFICATIONS OR THE PROPERTY SPECIFICATIONS OF ASTM C 270

5. GROUT SHALL CONSIST OF FIBER CEMENT MATERIAL AND AGGREGATE IN ACCORDANCE WITH ASTM C 476 AND THE PROPORTION SPECIFICATIONS PER THE N.C.-R

6. AGGREGATES FOR MORTAR AND GROUT SHALL BE NATURAL SAND AND ROCK CONFORMING TO A.S.T.M. C-144-04 (MASONRY MORTAR) AND C-404-07 (GROUT).

7. CEMENT SHALL BE PORTLAND CEMENT CONFORMING TO A.S.T.M. C 150.

8. ALL BRICK SHALL CONFORM TO A.S.T.M. C 216, GRADE MW.

9. UNLESS SPECIFICALLY SHOWN OTHERWISE ALL BRICK SHALL BE LAID IN A RUNNING BOND PATTERN.

10. ANCHORS, TIES AND WIRE FABRIC SHALL CONFORM TO N.C.-R

11. ANCHOR TIES AND WIRE FABRIC FOR USE IN MASONRY WALL CONSTRUCTION SHALL CONFORM TO THE N.C.-R

METALS

1. REFER TO STRUCTURAL NOTES AND SPECIFICATIONS FOR STRUCTURAL STEEL, METAL AND REINFORCING STEEL SPECIFICATIONS.

2. ALL STRUCTURAL STEEL SHALL CONFORM TO AISC/CRED

3. ANCHOR RODS SHALL BE SET ACCURATELY TO THE PATTERN AND DIMENSIONS CALLED FOR ON THE PLANS. THE PROTRUSION OF THE THREADED ENDS THROUGH THE CONNECTED MATERIAL SHALL BE SUFFICIENT TO FULLY ENGAGE THE THREADS OF THE NUTS, BUT SHALL NOT BE GREATER THAN THE LENGTH OF THE THREADS ON THE BOLTS

4. FASTENERS FOR PRESERVATIVE-TREATED AND FIRE-RETARDANT-TREATED WOOD SHALL BE OF HOT-DIPPED ZINC COATED GALVANIZED STEEL, STAINLESS STEEL, SILICON BRONZE OR COPPER. VERIFY ACCEPTABLE FASTENERS PER CHEMICALS USED IN PRESSURE PRESERVITIVELY TREATED WOOD W/ N.C.-R. FASTENINGS FOR WOOD FOUNDATIONS SHALL BE AS REQUIRED IN AF&PA TECHNICAL REPORT NO. 7.

WOOD & FRAMING

LUMBER

1. THE DESIGN AND CONSTRUCTION OF CONVENTIONAL LIGHT-FRAME WOOD CONSTRUCTION SHALL BE IN ACCORDANCE WITH THE PROVISIONS OF THE N.C.-R

2. CONSTRUCTION, PROJECTIONS, OPENINGS AND PENETRATIONS OF EXTERIOR WALLS OF DWELLINGS AND ACCESSORY BUILDINGS SHALL COMPLY WITH TABLE R302.1.

3. ALL LUMBER SHALL MEET THE STANDARDS OF QUALITY AS STATED IN THE N.C.-R

4. LUMBER AND PLYWOOD REQUIRED TO BE PRESSURE PRESERVATIVELY TREATED IN ACCORDANCE WITH THE N.C.-R AND SHALL BEAR THE QUALITY MARK OF AN APPROVED INSPECTION AGENCY THAT MAINTAINS CONTINUING SUPERVISION, TESTING AND INSPECTION OVER THE QUALITY OF THE PRODUCT AND THAT HAS BEEN APPROVED BY AN ACCREDITATION BODY THAT COMPLIES WITH THE REQUIREMENTS OF THE AMERICAN LUMBER STANDARD COMMITTEE TREATED WOOD PROGRAM.

5. ALL LUMBER SIZES NOTED AND SPECIFIED ON PLANS ARE NOMINAL SIZES UNLESS SPECIFICALLY INDICATED AS NET SIZE.

GLUE LAMINATED LUMBER

1. REFER TO THE STRUCTURAL ENGINEER'S CURRENT NOTES, CALCULATIONS, AND SPECIFICATIONS.

2. GLUED LAMINATED TIMBERS SHALL BE MANUFACTURED AND IDENTIFIED AS REQUIRED IN AITC A190.1 AND ASTM D 3737.

PROTECTION AGAINST DECAY & TERMITE

1. IN AREAS SUBJECT TO DECAY DAMAGE AS ESTABLISHED BY THE N.C.-R THE FOLLOWING LOCATIONS SHALL REQUIRE THE USE OF NATURALLY DURABLE WOOD OR WOOD THAT IS PRESERVATIVE TREATED IN ACCORDANCE WITH AWPA U1 FOR THE SPECIES, PRODUCT, PRESERVATIVE AND END USE. PRESERVATIVES SHALL BE LISTED IN SECTION 4 OF AWPA U1

   1. WOOD JOISTS OR THE BOTTOM OF WOOD FLOOR WHEN CLOSER THAN 18 INCHES, OR WOOD GIRDERS WHEN CLOSER THAN 12 INCHES TO THE EXPOSED GROUND IN CRAWL SPACES OR UNEXCAVATED AREAS LOCATED WITHIN THE PERIPHERY OF THE BUILDING FOUNDATION.

   2. ALL EXTERIOR SILLS &PLATES THAT REST ON CONCRETE OR MASONRY EXTERIOR FOUNDATION WALLS.

   3. SILLS AND SLEEPERS ON A CONCRETE OR MASONRY, UNLESS THE SLAB THAT IS IN DIRECT CONTACT WITH THE GROUND IS SEPARATED FROM THE GROUND BY AN APPROVED IMPERVIOUS MOISTURE BARRIER.

   4. THE ENDS OF WOOD GIRDERS ENTERING EXTERIOR MASONRY OR CONCRETE WALLS HAVING CLEARANCES OF LESS THAN 0.5 INCH ON TOPS, SIDES AND ENDS.

   5. WOOD SIDING AND SHEATHING ON THE EXTERIOR OF A BUILDING HAVING A CLEARANCE OF LESS THAN 6 INCHES FROM THE GROUND.

   6. WOOD STRUCTURAL MEMBERS SUPPORTING MOISTURE-PERMEABLE FLOORS OR ROOFS THAT ARE EXPOSED TO THE WEATHER , SUCH AS CONCRETE OR MASONRY SLABS, UNLESS SEPARATED FROM SUCH FLOORS OR ROOFS BY ANIMPERVIOUS MOISTURE BARRIER.

   7. WOOD FURRING STRIPS OR OTHER WOOD FRAMING MEMBERS ATTACHED DIRECTLY TO THE INTERIOR OF EXTERIOR MASONRY WALLS OR CONCRETE WALLS BELOW GRADE EXCEPT WHERE AN APPROVED VAPOR RETARDER IS APPLIED BETWEEN THE WALL AND THE FURRING STRIPS OR FRAMING MEMBERS.

   8. ALL PORTIONS OF A PORCH, SCREEN PORCH OR DECK FROM THE BOTTOM OF THE HEADER DOWN, INCLUDING POSTS, GUARDRAILS, PICKETS, STEPS AND FLOOR STRUCTURE. COVERINGS THAT WOULD PREVENT MOISTURE OR WATER ACCUMULATION ON THE SURFACE OR AT JOINTS BETWEEN MEMBERS ARE ALLOWED.

3. IN AREAS SUBJECT TO DAMAGE FROM TERMITES METHODS OF PROTECTION SHALL BE ONE OF THE METHODS LISTED IN THE N.C.-R

4. UNDER-FLOOR AREAS SHALL BE VENTILATED IN ACCORDANCE WITH THE REQUIREMENTS OF THE N.C.-R

WOOD & FRAMING (continued)

SHEATHING

1. WOOD STRUCTURAL PANELS SHALL CONFORM TO THE REQUIREMENTS AS SET FORTH IN THE N.C.-R

2. ROOF SHEATHING PANELS SHALL BE LAID WITH FACE GRAIN OR STRENGTH AXIS PERPENDICULAR TO SUPPORTS AND WITH PANEL CONTINUOUS OVER TWO OR MORE SPANS.

3. ROOF SHEATHING SHALL BE IN ACCORDANCE WITH THE N.C.-R

4. FLOOR SHEATHING PANELS SHALL BE LAID WITH FACE GRAIN OR STRENGTH AXIS PERPENDICULAR TO SUPPORTS AND WITH PANEL CONTINUOUS OVER TWO OR MORE SPANS.

5. STRUCTURAL FLOOR SHEATHING SHALL COMPLY WITH THE PROVISIONS OF THE N.C.-R

6. REFER TO THE STRUCTURAL ENGINEER'S CURRENT SPECIFICATIONS, CALCULATIONS, AND PLANS FOR REQUIRED STRENGTH, GRADE, AND THICKNESS FOR PLYWOOD FLOOR SHEATHING PANELS AND FOR DIAPHRAGM NAILING AND ADHESIVE REQUIREMENTS.

7. ALL VERTICAL JOINTS OF PANEL SHEATHING SHALL OCCUR OVER, AND BE FASTENED TO, COMMON STUDS. HORIZONTAL JOINTS IN BRACED WALL PANELS SHALL OCCUR OVER, AND BE FASTENED TO, COMMON BLOCKING OF A MINIMUM OF 1 1/2 INCH THICKNESS.

8. WHERE APPLICABLE, REFER TO THE SHEAR WALL SCHEDULE FOR REQUIRED STRENGTH, GRADE, AND THICKNESS OF PLYWOOD SHEAR PANELS AND FOR REQUIRED SHEAR WALL NAILING SCHEDULE.

9. IN ONE- AND TWO-FAMILY DWELLING CONSTRUCTION USING HARD BOARD OR ALUMINUM AS A SOFFIT MATERIAL, THE SOFFIT MATERIAL SHALL BE SECURELY ATTACHED TO FRAMING MEMBERS AND USE AN UNDERLAYMENT MATERIAL OF EITHER FIRE RETARDANT TREATED WOOD, 23/32 INCH WOOD SHEATHING OR 5/8 INCH GYPSUM BOARD. VENTING REQUIREMENTS APPLY TO BOTH SOFFIT AND UNDERLAYMENT AND SHALL BE PER SECTION R806 OF THE NORTH CAROLINA RESIDENTIAL CODE. WHERE THE PROPERTY LINE IS 10 FEET OR MORE FROM THE BUILDING FACE, THE PROVISIONS OF THIS CODE SECTION DO NOT APPLY.

FLOOR FRAMING

1. ALL FLOOR JOISTS SHALL BE DESIGNED I-JOIST WOOD FLOOR TRUSSES. REFER TO MANUFACTURER FOR ALL LAYOUTS AND CALCULATIONS.

2. REFER TO THE STRUCTURAL ENGINEER'S CURRENT PLANS & CALCULATIONS FOR SIZE, SPACING, AND ANCHORAGE OF ALL FLOOR JOISTS; SIZE, LOCATION, AND ANCHORAGE OF ALL FLOOR BEAMS AND HEADERS; AND ALL RELATED FRAMING ISSUES.

ROOF FRAMING

1. ROOF FRAMING SHALL BE BY PRE-MANUFACTURED ROOF TRUSSES SPACED AT 24 INCHES ON CENTER UNLESS NOTED OTHERWISE.

2. WOOD TRUSSES SHALL BE DESIGNED IN ACCORDANCE WITH THE REQUIREMENTS OF THE N.C.-R

3. THE MANUFACTURER SHALL SUPPLY TO THE ARCHITECT AND BUILDER CALCULATIONS AND SHOP DRAWINGS FOR APPROVAL OF DESIGN LOADS, CONFIGURATION (2 OR 3 POINT BEARING), VOLUME CEILING OPTIONS, AND SHEAR TRANSFER, PRIOR TO FABRICATION.

4. THE BRACING OF WOOD TRUSSES SHALL COMPLY TO THEIR APPROPRIATE ENGINEERED DESIGN. PER THE N.C.-R

5. TRUSS MEMBERS SHALL NOT BE CUT, NOTCHED, DRILLED, SPLICED OR OTHERWISE ALTERED IN ANY WAY WITHOUT THE APPROVAL OF A REGISTERED DESIGN PROFESSIONAL. ALTERATIONS RESULTING IN THE ADDITION OF LOAD (E.G. HVAC EQUIPMENT, WATER HEATER) THAT EXCEEDS THE DESIGN LOAD FOR THE TRUSSES SHALL NOT BE PERMITTED WITHOUT WRITTEN VERIFICATION THAT THE TRUSS IS CAPABLE OF SUPPORTING SUCH ADDITIONAL LOADING.

6. ALL CALCULATIONS AND SHOP DRAWINGS SHALL BE SIGNED BY A PROFESSIONAL ENGINEER REGISTERED IN THE STATE WHEREIN THE PROJECT IS TO BE BUILT.

7. MANUFACTURER IS TO SECURE BUILDING DEPARTMENT APPROVAL OF CALCULATIONS AND SHOP DRAWINGS PRIOR TO FABRICATION.

WALL FRAMING

1. THE SIZE, HEIGHT, AND SPACING OF STUDS SHALL BE IN ACCORDANCE WITH THE N.C.-R

2. STUDS SHALL BE PLACED WITH THEIR WIDE DIMENSION PERPENDICULAR TO THE WALL.

3. NOT LESS THAN THREE STUDS SHALL BE INSTALLED AT EACH CORNER OF AN EXTERIOR WALL.

4. WOOD STUD WALLS SHALL BE CAPPED WITH A DOUBLE TOP PLATE INSTALLED TO PROVIDE OVERLAPPING AT CORNERS AND INTERSECTIONS WITH BEARING PARTITIONS. END JOINTS IN TOP PLATES SHALL BE OFFSET AT LEAST 24 INCHES. JOINTS NEED NOT OCCUR OVER STUDS. PLATES SHALL BE NOT LESS THAN 2-INCHES NOMINAL THICKNESS AND HAVE A WIDTH AT LEAST EQUAL TO THE WIDTH OF THE STUDS. SEE EXCEPTIONS.

5. WHERE JOISTS, TRUSSES OR RAFTERS ARE SPACED MORE THAN 16 INCHES ON CENTER AND THE BEARING STUDS BELOW ARE SPACED 24 INCHES ON CENTER, SUCH MEMBERS SHALL BEAR WITHIN 5 INCHES OF THE STUDS BENEATH. SEE EXCEPTIONS.

6. STUDS SHALL HAVE FULL BEARING ON NOMINAL 2 BY OR LARGER PLATE OR SILL HAVING A WIDTH AT LEAST EQUAL TO THE WIDTH OF THE STUDS.

7. INTERIOR NONBEARING WALLS SHALL BE PERMITTED TO BE CONSTRUCTED WITH 2-INCH-BY-3-INCH STUDS SPACED 24 INCHES ON CENTER OR, WHEN NOT A PART OF A BRACED WALL LINE, 2-INCH-BY-4-INCH FLAT STUDS SPACED 16 INCHES ON CENTER. INTERIOR NONBEARING WALLS SHALL BE CAPPED WITH AT LEAST A SINGLE TOP PLATE. INTERIOR NONBEARING WALLS SHALL BE FIREBLOCKED IN ACCORDANCE WITH THE N.C.-R

WOOD & FRAMING (continued)

8. DRILLING AND NOTHCING OF STUDS SHALL BE IN ACCORDANCE WITH THE FOLLOWING:

   1. NOTHCING. ANY STUD IN AN EXTERIOR WALL OR BEARING PARTITION MAY BE CUT OR NOTCHED TO A DEPTH NOT EXCEEDING 25 PERCENT OF ITS WIDTH. STUDS IN NONBEARING PARTITIONS MAY BE NOTCHED TO A DEPTH NOT TO EXCEED 40 PERCENT OF A SINGLE STUD WIDTH. NOTCHING OF BEARING STUDS SHALL BE ON ONE EDGE ONLY AND NOT TO EXCEED ONE-FOURTH THE HEIGHT OF THE STUD. NOTCHING SHALL NOT OCCUR IN THE BOTTOM OR TOP 6 INCHES OF BEARING STUDS.

   2. DRILLING. ANY STUD MAY BE BORED OR DRILLED, PROVIDED THAT THE DIAMETER OF THE RESULTING HOLE IS NO MORE THAN 60 PERCENT OF THE STUD WIDTH, THE EDGE OF THE HOLE IS NO MORE THAN 5/8" INCH TO THE EDGE OF THE STUD, AND THE HOLE SHALL NOT BE CLOSER THAN 6 INCHES FROM AN ADJACENT HOLE OR NOTCH. HOLES NOT EXCEEDING 3/4 INCH DIAMETER CAN BE AS CLOSE AS 1 1/2 INCHES ON CENTER SPACING. STUDS LOCATED IN EXTERIOR WALLS OR BEARING PARTITIONS DRILLED OVER 40 PERCENT AND UP TO 60 PERCENT SHALL ALSO BE DOUBLED WITH NO MORE THAN TWO SUCCESSIVE DOUBLED STUDS BORED.

   3. CUTTING AND NOTCHING OF STUDS SHALL BE PERMITTED TO BE INCREASED TO 65 PERCENT OF THE WIDTH OF THE STUD IN EXTERIOR AND INTERIOR WALLS AND BEARING PARTITIONS, PROVIDED THAT ONE OF THE FOLLOWING CONDITIONS ARE MET:
   (a) THE WALL SECTION IS REINFORCED WITH 1/2-INCH EXTERIOR GRADE PLYWOOD OR EQUIVALENT REINFORCEMENT ON THE NOTCHED SIDE OF THE WALL. PLYWOOD, IF USED, SHALL REACH FROM THE FLOOR TO CEILING AND AT LEAST ONE STUD FURTHER ON EACH SIDE OF THE SECTION THAT HAS BEEN NOTCHED OR CUT.
   (b) THE EXTERIOR WALLS OF A KITCHEN MAY BE REINFORCED BY PLACING 1/2-INCH PLYWOOD OR EQUIVALENT REINFORCEMENT ON THE NOTCHED SIDE OF THE WALL. PLYWOOD, IF USED, SHALL REACH FROM THE FLOOR TO COUNTER-TOP HEIGHT AND AT LEAST ONE STUD FURTHER ON EACH SIDE OF THE SECTION THAT HAS BEEN NOTCHED OR CUT.

9. WHEN PIPING OR DUCTWORK IS PLACED IN OR PARTIALY IN AN EXTERIOR OR INTERIOR LOAD-BEARING WALL, NECESSITATION CUTTING, DRILLING OR NOTCHING OF THE TOP PLATE B MORE THAN 50 PERCENT OF ITS WIDTH A GALVANIZED METAL TIE OF NOT LESS THAN 0.054 INCH THICK AND 1 1/2" INCHES WIDE SHALL BE FASTENED ACROSS AND TO THE PLATE AT EACH SIDE OF THE OPENING WITH NOT LESS THAN EIGHT 10d NAILS HAVING A MINIMUM LENGTH OF 1 1/2 INCHES (38 MM) AT EACH SIDE OR EQUIVALENT. THE METAL TIE MUST EXTEND A MINIMUM OF 6 INCHES PAST THE OPENING.

10. HEADERS SHALL MEET THE REQUIREMENTS OF THE N.C.-R

11. PROVIDE LATERAL BRACING PER THE N.C.-R

13. FOUNDATION CRIPPLE WALLS SHALL MEET THE REQUIREMENTS OF THE N.C.-R CODE

14. WOOD STUD WALLS SHALL BE BRACED AS REQUIRED BY THE N.C.-R

15. UNLESS COVERED BY INTERIOR OR EXTERIOR WALL COVERINGS OR SHEATHING MEETING THE MINIMUM REQUIREMENTS OF THIS CODE, ALL STUD PARTITIONS OR WALLS WITH STUDS HAVING A HEIGHT-TO-LEAST THICKNESS RATIO EXCEEDING 50 SHALL HAVE BRIDGING NOT LESS THAN 2 INCHES IN THICKNESS AND OF THE SAME WIDTH AS THE STUDS FITTED SNUGLY AND NAILED THERETO TO PROVIDE ADEQUATE LATERAL SUPPORT.

FIRE BLOCKS AND DRAFT STOPS

1. FIRE BLOCKING SHALL BE PROVIDED TO CUT OFF ALL CONCEALED DRAFT OPENINGS (BOTH VERTICAL AND HORIZONTAL) AND TO FORM AN EFFECTIVE BARRIER BETWEEN STORIES, AND BETWEEN A TOP STORY AND A ROOF SPACE. FIREBLOCKING SHALL BE PROVIDED IN WOOD-FRAME CONSTRUCTION IN THE LOCATIONS SPECIFIED IN THE N.C.-R

2. FIRE BLOCKING SHALL CONSIST OF 2 INCHES NOMINAL LUMBER, OR TWO THICKNESSES OF 1-INCH NOMINAL LUMBER WITH BROKEN LAP JOINTS, OR ONE THICKNESS OF 23/32-INCH WOOD STRUCTURAL PANELS WITH JOINTS BACKED BY 23/32-INCH WOOD STRUCTURAL PANELS OR ONE THICKNESS OF 3/4-INCH PARTICLEBOARD WITH JOINTS BACKED BY 3/4-INCH PARTICLEBOARD, 1/2-INCH GYPSOM BOARD, OR 1/4-INCH CEMENT-BASED MILLBOARD.

3. BATTS OR BLANKETS OF MINERAL WOOL OR GLASS FIBER OR OTHER APPROVED MATERIALS INSTALLED IN SUCH A MANNER AS TO BE SECURELY RETAINED IN PLACE SHALL BE PERMITTED AS AN ACCEPTABLE FIRE BLOCK.

4. BATTS OR BLANKETS OF MINERAL OR GLASS FIBER OR OTHER APPROVED NON-RIGID MATERIALS SHALL BE PERMITTED FOR COMPLIANCE WITH THE 10 FOOT HORIZONTAL FIREBLOCKING IN WALLS CONSTRUCTED USING PARALLEL ROWS OF STUDS OR STAGGERED STUDS. LOOSE FILL INSULATION MATERIAL SHALL NOT BE USED AS A FIREBLOCK UNLESS SPECIFICALLY TESTED IN THE FORM AND MANNER INTENDED FOR USE TO DEMONSTRATE IT'S ABILITY TO REMAIN IN PLACE AND TO RETARD THE SPREAD OF FIRE AND HOT GASSES.

5. WHEN THERE IS USABLE SPACE BOTH ABOVE AND BELOW THE CONCEALED SPACE OF A FLOOR/CEILING ASSEMBLY, DRAFTSTOPS SHALL BE INSTALLED SO THAT THE AREA OF THE CONCEALED SPACE DOES NOT EXCEED 1,000 SQUARE FEET. DRAFTSTOPPING SHALL DIVIDE THE CONCEALED SPACE INTO APPROXIMATELY EQUAL AREAS. WHERE THE ASSEMBLY IS ENCLOSED BY A FLOOR MEMBRANE ABOVE AND A CEILING MEMBRANE BELOW, DRAFTSTOPPING SHALL BE PROVIDED IN FLOOR/CEILING ASSEMBLIES UNDER THE FOLLOWING CIRCUMSTANCES:

   1. CEILING IS SUSPENDED UNDER THE FLOOR FRAMING.

   2. FLOOR FRAMING IS CONSTRUCTED OF TRUSS-TYPE OPEN-WEB OR PERFORATED MEMBERS.

HANDRAIL AND GUARDRAIL

1. GUARDRAIL OF 36" HIGH MIN. SHALL BE PROVIDED WHERE FINISHED GRADE OR FLOOR BELOW RAISED AREA EXCEEDS 30".

2. HANDRAIL AT STAIRS SHALL BE PROVIDED WHEN 4 OR MORE STAIR RISERS ARE REQUIRED.

kb HOME®

NORTH CAROLINA
50' SERIES

KB HOME
NORTH CAROLINA DIVISION

4518 S. MIAMI BLVD.
SUITE 180
DURHAM, NC 27703
TEL: (919) 768-7988
FAX: (919) 472-0582

2018 NORTH CAROLINA STATE BUILDING CODES

ISSUE DATE: 09/11/18
PROJECT No.: 1350999:57
DIVISION MGR.: MP
REVISIONS: 08/01/19

1	2018 CODE UPDATE	NC19015NCP/ 03/15/19 / CTD
2	DIVISION REVISIONS	NC19022NCP/ 03/15/19 / CTD
3	DIVISION REVISIONS	NC19028NCP/ 04/22/19 / FAE
4	DIVISION REVISIONS	NC19047NCP/ 08/01/19 / FAE
5	DIVISION REVISIONS	NC20038NCP/ 10/29/20 / KBA

PLAN: 243.2939-R

SHEET: GN1

SPEC. LEVEL 1

RALEIGH-DURHAM
50' SERIES

These designs and drawings are CONFIDENTIAL, and the exclusive property of KB Home Corporation and are not to be disclosed without the express permission of KB Home Corporation. They may not be used or duplicated without the express permission of KB Home Corporation. Copyright 2014 © KB Home Corporation, all rights reserved.

THERMAL & MOISTURE PROTECTION

1. PROVIDE ALL FLASHING , COUNTER-FLASHING, BITUTHENE, MEMBRANE WATERPROOFING, SHEET METAL, CAULKING, SEALANTS, ELASTOMERIC WALKING SURFACES, AND RAIN GUTTERS AND/OR DIVERTERS WHERE REQUIRED, TO MAKE WORK COMPLETELY WATERPROOF.

2. "CORROSION RESISTANCE" SHALL MEAN THE ABILITY OF A MATERIAL TO WITHSTAND DETERIORATION OF IT'S SURFACE OR IT'S PROPERTIES WHEN EXPOSED TO IT'S ENVIRONMENT.

3. BALCONIES, LANDINGS, EXTERIOR STAIRWAYS, OCCUPIED ROOFS AND SIMILAR SURFACES EXPOSED TO THE WEATHER AND SEALED UNDERNEATH SHALL BE WATERPROOFED AND SLOPED A MINIMUM OF 1/4 UNIT VERTICAL IN 12 UNITS HORIZONTAL (2% SLOPE) FOR DRAINAGE.

4. PROVIDE A MINIMUM 2 INCH DROP FROM FINISHED INTERIOR FLOOR ELEVATION TO THE HIGHEST FLOOR ELEVATION OF ANY ADJOINING DECK OR BALCONY.

5. ELASTOMERIC OR MEMBRANE DECK COATINGS SHALL BE INSTALLED PER MANUFACTURER'S SPECIFICATIONS AT DECKS AND BALCONIES. COLOR, FINISH, AND DETAILING SHALL BE APPROVED BY OWNER/ BUILDER AND ARCHITECT.

6. UNLESS DESIGNED TO DRAIN OVER DECK EDGES, DRAINS AND OVERFLOWS OF ADEQUATE SIZE SHALL BE INSTALLED AT THE LOW POINTS OF THE DECK OR BALCONY.

7. FOUNDATION WALLS WHERE THE OUTSIDE GRADE IS HIGHER THAN THE INSIDE GRADE SHALL BE WATER-PROOFED AND DAMPPROOFED IN ACCORDANCE WITH THE N.C.-R

8. PARAPET WALLS SHALL BE PROPERLY COPED WITH NONCOMBUSTIBLE, WEATHERPROOF MATERIALS OF A WIDTH NO LESS THAN THE THICKNESS OF THE PARAPET WALL. PARAPET COPING SHALL EXTEND 2" MINIMUM DOWN THE FACES OF THE PARAPET.

FLASHING

1. APPROVED CORROSION-RESISTANT FLASHING SHALL BE APPLIED SHINGLE-FASHION IN A MANNER TO PREVENT ENTRY OF WATER INTO THE WALL CAVITY OR PENETRATION OF WATER TO THE BUILDING STRUCTURAL FRAMING COMPONENTS. SELF-ADHERED MEMBRANES USED AS FLASHING SHALL COMPLY WITH AAMA 711. FLUID-APPLIED MEMBRANES USED AS FLASHING IN EXTERIOR WALLS SHALL COMPLY WITH AAMA 714. THE FLASHING SHALL EXTEND TO THE SURFACE OF THE EXTERIOR WALL FINISH. ALUMINUM FLASHING SHALL NOT BE USED IN CONTACT WITH FIBER CEMENT MATERIAL, EXCEPT AT COUNTER FLASHING. APPROVED CORROSION-RESISTANT FLASHINGS SHALL BE INSTALLED AT ALL OF THE LOCATIONS STATED IN N.C.-R.

2. AT ALL WINDOW AND DOOR OPENINGS USE FORTIFIBER WATER-RESISTIVE BARRIERS, I.C.C. ESR-1027, INSTALLED PER MANUFACTURER'S SPECIFICATIONS, OR APPROVED EQUAL.

3. ALL BEAMS, OUTLOOKERS, CORBELS, ETC. PROJECTED THROUGH EXTERIOR WALLS OR PENETRATING EXTERIOR FINISHES SHALL BE FLASHED WITH A MINIMUM 0.019-INCH (NO. 26 SHEET METAL GAGE) CORROSION-RESISTANT METAL AND CAULKED.

4. ALL SHEET METAL WORK SHALL BE PERFORMED IN ACCORDANCE WITH THE RECOMMENDATIONS AND STANDARDS OF THE SHEET METAL AND AIR CONDITIONING CONTRACTOR'S NATIONAL ASSOCIATION (S.M.A.C.N.A.), THE ARCHITECTURAL SHEET METAL MANUAL, AND SEALANT, WATERPROOFING AND RESTORATION INSTITUTE'S (S.W.R.I.) GUIDE - "SEALANT'S: THE PROFESSIONAL'S GUIDE".

5. SHEET METAL SHALL BE STEEL SHEET, HOT-DIPPED, TIGHT COATED AND GALVANIZED, CONFORMING TO A.S.T.M. A525 AND SHALL BE A NUMBER 24 SHEET METAL GAGE UNLESS OTHERWISE NOTED IN THESE NOTES, PLANS, OR MANUFACTURER'S SPECIFICATIONS.

6. SHEET ALUMINUM SHALL CONFORM WITH FEDERAL SPECIFICATIONS QQ-A-359 AND A.S.T.M. B209 ALLOY 3003.

7. FABRICATE SHEET METAL WITH FLAT LOCK SEAMS AND SOLDER WITH TYPE AND FLUX RECOMMENDED BY MANUFACTURER. SEAL ALUMINUM SEAMS WITH EPOXY METAL SEAM CEMENT. WHERE REQUIRED FOR STRENGTH, RIVET SEAMS AND JOINTS.

8. SHOP FABRICATE TO THE GREATEST EXTENT POSSIBLE IN ACCORDANCE WITH APPLICABLE STANDARDS TO PROVIDE A PERMANENTLY WATERPROOF, WEATHER RESISTANT INSTALLATION.

9. ASPHALT SHINGLES SHALL HAVE SELF-SEAL STRIPS OR BE INTERLOCKING, AND COMPLY WITH ASTM D 225 OR D 3462.

10. BASE AND CAP FLASHING SHALL BE INSTALLED IN ACCORDANCE WITH MANUFACTURER'S INSTALLATION INSTRUCTIONS. BASE FLASHING SHALL BE OF EITHER CORROSION-RESISTANT METAL OF MINIMUM NOMINAL 0.019-INCH THICKNESS OR MINERAL SURFACE ROLL ROOFING WEIGHING A MINIMUM OF 77 POUNDS PER 100 SQUARE FEET. CAP FLASHING SHALL BE CORROSION-RESISTANT METAL OF MINIMUM NOMINAL 0.019-INCH THICKNESS

11. VALLEY LININGS SHALL BE INSTALLED IN ACCORDANCE WITH THE MANUFACTURER'S INSTALLATION INSTRUCTIONS BEFORE APPLYING SHINGLES. VALLEY LININGS OF THE FOLLOWING TYPES SHALL BE PERMITTED AS STATED PER THE N.C.-R

12. A CRICKET OR SADDLE SHALL BE INSTALLED ON THE RIDGE SIDE OF ANY CHIMNEY OR PENETRATION MORE THAN 30 INCHES WIDE AS MEASURED PERPENDICULAR TO THE SLOPE. CRICKET OR SADDLE COVERINGS SHALL BE SHEET METAL OR OF THE SAME MATERIAL AS THE ROOF COVERING. PROVIDE FLASHING AT THE INTERSECTION OF CRICKET OR SADDLE AND THE CHIMNEY.

13. FLASHING AGAINST A VERTICAL SIDEWALL SHALL BE BY THE STEP-FLASHING METHOD PER NC-R.

14. FLASHING AGAINST A VERTICAL FRONT WALL, AS WELL AS SOIL STACK, VENT PIPE AND CHIMNEY FLASHING, SHALL BE APPLIED ACCORDING TO THE ASPHALT SHINGLE MANUFACTURER'S PRINTED INSTRUCTIONS.

15. AT THE JUNCTURE OF ROOF VERTICAL SURFACES, FLASHING AND COUNTERFLASHING SHALL BE PROVIDED IN ACCORDANCE WITH THE N.C.-R AND THE MANUFACTURER'S INSTALLATION INSTRUCTIONS AND, WHERE OF METAL, SHALL NOT BE LESS THAN 0.019 INCH (NO. 26 GALVANIZED SHEET GAGE) CORROSION-RESISTANT METAL

16. VALLEY FLASHING FOR CONCRETE TILE ROOFS SHALL BE AS REQUIRED.

ROOFING MATERIALS

1. ROOF COVERINGS SHALL BE APPLIED IN ACCORDANCE WITH THE N.C.-R AND THE MANUFACTURER'S INSTALLATION INSTRUCTIONS. INSTALLATION OF ROOF COVERINGS SHALL COMPLY WITH THE APPLICABLE PROVISIONS OF THE N.C.-R

2. ROOFS AND ROOF COVERINGS SHALL BE OF MATERIALS THAT ARE COMPATIBLE WITH EACH OTHER AND WITH THE BUILDING OR STRUCTURE TO WHICH THE MATERIALS ARE APPLIED.

3. ROOF COVERING MATERIALS SHALL CONFORM TO THE APPLICABLE STANDARDS LISTED IN THE N.C.-R IN THE ABSENCE OF APPLICABLE STANDARDS OR WHERE MATERIALS ARE OF QUESTIONABLE SUITABILITY, TESTING BY AN APPROVED TESTING AGENCY SHALL BE REQUIRED BY THE BUILDING OFFICIAL TO DETERMINE THE CHARACTER, QUALITY, AND LIMITATIONS OF APPLICATION OF THE MATERIALS.

THERMAL & MOISTURE PROTECTION (continued)

4. ROOF COVERING MATERIALS SHALL BE DELIVERED IN PACKAGES BEARING THE MANUFACTURER'S IDENTIFYING MARKS AND APPROVED TESTING AGENCY LABELS WHEN REQUIRED. BULK SHIPMENTS OF MATERIALS SHALL BE ACCOMPANIED BY THE SAME INFORMATION ISSUED IN THE FORM OF A CERTIFICATE OR ON A BILL OF LADING BY THE MANUFACTURER

5. COMPOSITION ROOFING SHINGLES SHALL BE OF ASPHALT OR APPROVED RELATED MATERIALS AND MEET THE REQUIREMENTS OF THE N.C.-R

6. UNDERLAYMENT FOR ASPHALT SHINGLES SHALL CONFORM TO ASTM D 226 TYPE I, ASTM D 4869, TYPE I, OR ASTM D 6757. SELF-ADHERING POLYMER MODIFIED BITUMEN SHEET SHALL COMPLY WITH ASTM D 1970

7. ASPHALT SHINGLES SHALL COMPLY WITH ASTM D 225 OR ASTM D 3462.

8. FASTENERS FOR ASPHALT SHINGLES SHALL BE GALVANIZED STEEL, STAINLESS STEEL, ALUMINUM, OR COPPER ROOFING NAILS, MINIMUM 12 GAGE SHANK WITH A MINIMUM 3/8 INCH DIAMETER HEAD, ASTM F 1667, OF A LENGTH TO PENETRATE THROUGH THE ROOFING MATERIALS AND A MINIMUM OF 3/4 INCH INTO THE ROOF SHEATHING. WHERE THE ROOF SHEATHING IS LESS THAN 3/4 INCH THICK, THE FASTENERS SHALL PENETRATE THROUGH THE SHEATHING. FASTENERS SHALL COMPLY WITH ASTM F 1667.

9. ASPHALT SHINGLES SHALL HAVE THE MINIMUM NUMBER OF FASTENERS REQUIRED BY THE MANUFACTURER. FOR NORMAL APPLICATION, ASPHALT SHINGLES SHALL BE SECURED TO THE ROOF WITH NOT LESS THAN FOUR FASTENERS PER STRIP SHINGLE OR TWO FASTENERS PER INDIVIDUAL SHINGLE PER N.C.-R.

10. UNDERLAYMENT FOR ASPHALT SHINGLES SHALL BE APPLIED IN ACCORDANCE WITH THE N.C.-R

11. THE INSTALLATION OF CLAY AND CONCRETE TILE SHALL COMPLY WITH THE PROVISIONS OF N.C.-R CLAY ROOF TILE SHALL COMLY WITH ASTM C 1167.

12. CONCRETE AND CLAY TILE SHALL BE INSTALLED ONLY OVER SOLID SHEATHING OR SPACED STRUCTURAL SHEATHING BOARDS.

13. CLAY AND CONCRETE ROOF TILE SHALL BE INSTALLED ON ROOF SLOPES OF 2 1/2 UNITS VERTICAL IN 12 UNITS HORIZONTAL (2-1/2:12) OR GREATER. FOR ROOF SLOPES FROM 2 1/2 UNITS VERTICAL IN 12 UNITS HORIZONTAL (2-1/2:12) TO FOUR UNITS VERTICAL IN 12 UNITS HORIZONTAL (4:12), DOUBLE UNDERLAYMENT APPLICATION IS REQUIRED IN ACCORDANCE WITH THE N.C.-R

14. UNDERLAYMENT FOR CLAY AND CONCRETE TILE SHALL CONFORM WITH ASTM D 226, TYPE II; ASTM D 2626 TYPE I; OR ASTM D 6380 CLASS M MINERAL SURFACED ROLL ROOFING.

15. CONCRETE ROOF TILE SHALL COMPLY WITH ASTM C 1492.

16. NAILS SHALL BE CORROSION-RESISTANT AND NOT LESS THAN 11 GAGE, 5/16-INCH HEAD, AND OF SUFFICIENT LENGTH TO PENETRATE THE DECK A MINIMUM OF 3/4-INCH OR THROUGH THE THICKNESS OF THE DECK, WHICHEVER IS LESS. ATTACHING WIRE FOR CLAY OR CONCRETE TILE SHALL NOT BE SMALLER THAN 0.083-INCH. PERIMETER FASTENING AREAS INCLUDE THREE TILE COURSES BUT NOT LESS THAN 36 INCHES FROM EITHER SIDE OF HIPS OR RIDGES AND EDGES OF EAVES AND GABLE RAKES. N.C.-R

17. CLAY AND CONCRETE ROOF TILES SHALL BE FASTENED IN ACCORDANCE WITH THE N.C.-R

18. TILE SHALL BE APPLIED ACCORDING TO THE MANUFACTURER'S INSTALLATION INSTRUCTIONS, BASED ON CLIMATIC CONDITIONS, ROOF SLOPE, UNDERLAYMENT SYSTEM, AND TYPE OF TILE BEING INSTALLED PER THE N.C.-R

19. THE INSTALLTION OF BUILT-UP ROOFS SHALL COMPLY WITH THE N.C.-R

20. BUILT-UP ROOFS SHALL HAVE A DESIGN SLOPE OF A MINIMUM OF ONE-FOUTH UNIT VERTICAL IN 12 UNITS HORIZONTAL (2-PERCENT SLOPE) FOR DRAINAGE, EXCEPT FOR COAL-TAR BUILT-UP ROOFS THAT SHALL HAVE A DESIGN SLOPE OF A MINIMUM ONE-EIGHTH UNIT VERTICAL IN 12 UNITS HORIZONTAL (1-PERCENT SLOPE).

21. BUILT-UP ROOF COVERING MATERIALS SHALL COMPLY WITH THE STANDARDS PER THE N.C.-R

EXTERIOR WALL COVERINGS

1. SEE FINISHES IN THESE GENERAL NOTES FOR EXTERIOR PLASTER.

2. MATERIALS USED FOR THE CONSTRUCTION OF EXTERIOR WALLS SHALL COMPLY WITH THE PROVISIONS OF THE N.C.-R

3. EXTERIOR WALLS SHALL PROVIDE THE BUILDING WITH A WEATHER-RESISTANT EXTERIOR WALL ENVELOPE. THE EXTERIOR WALL ENVELOPE SHALL INCLUDE FLASHING. THE EXTERIOR WALL ENVELOPE SHALL BE DESIGNED AND CONSTRUCTED IN A MANNER THAT PREVENTS THE ACCUMULATION OF WATER WITHIN THE WALL ASSEMBLY BY PROVIDING A WATER-RESISTANT BARRIER BEHIND THE EXTERIOR VENEER AS REQUIRED AND A MEANS OF DRAINING WATER THAT ENTERS THE ASSEMBLY TO THE EXTERIOR. PROTECTION AGAINST CONDENSATION IN THE EXTERIOR WALL ASSEMBLY SHALL BE PROVIDED.

4. ONE LAYER OF NO. 15 ASPHALT FELT, FREE FROM HOLES AND BREAKS, COMPLYING WITH ASTM D 226 FOR TYPE I FELT OR OTHER APPROVED WATER-RESISTIVE BARRIER SHALL BE APPLIED OVER STUDS OR SHEATHING OF ALL EXTERIOR WALLS. SUCH FELT OR MATERIAL SHALL BE APPLIED HORIZONTALLY, WITH THE UPPER LAYER LAPPED OVER THE LOWER LAYER NOT LESS THAN 2 INCHES. WHERE JOINTS OCCUR, FELT SHALL BE LAPPED NOT LESS THAN 6 INCHES. THE FELT OR OTHER APPROVED MATERIAL SHALL BE CONTINUOUS TO THE TOP OF WALLS AND TERMINATED AT PENETRATIONS AND BUILDING APPENDAGES IN A MANNER TO MEET THE REQUIREMENTS OF THE EXTERIOR WALL ENVELOPE.

5. FIBER CEMENT SIDING CONFORMING TO THE REQUIREMENTS OF THE N.C.-R AND COMPLYING WITH ASTM D 3679 SHALL BE PERMITTED ON EXTERIOR WALLS OF BUILDINGS OF TYPE V CONSTRUCTION LOCATED IN AREAS WHERE THE ULTIMATE WIND SPEED SPECIFIED DOES NOT EXCEED 100 MILES PER HOUR AND THE BUILDING HEIGHT IS LESS THAN 40 FEET IN EXPOSURE C. WHERE CONSTRUCTION IS LOCATED IN AREAS WHERE THE ULTIMATE WIND SPEED EXCEEDS 130 MILES PER HOUR OR BUILDING HEIGHTS ARE IN EXCESS OF 40 FT., DATA INDICATING COMPLIANCE MUST BE SUBMITTED. FIBER CEMENT SIDING SHALL BE SECURED TO BUILDING TO PROVIDE WEATHER PROTECTION FOR THE EXTERIOR WALLS OF THE BUILDING.

6. FIBER CEMENT SIDING SHALL BE APPLIED OVER SHEATHING OR MATERIALS LISTED IN THE N.C.-R FIBER CEMENT SIDING SHALL BE APPLIED TO CONFORM WITH THE WEATHER-RESISTIVE BARRIER REQUIREMENTS FIBER CEMENT SIDING AND ACCESSORIES SHALL BE INSTALLED IN ACCORDANCE WITH APPROVED MANUFACTURER'S INSTRUCTIONS.

7. FIBER CEMENT SIDING FASTENERS AND ACCESSORIES SHALL MEET THE REQUIREMENTS OF THE N.C.-B

8. EXTERIOR WALLS OF WOOD CONSTRUCTION SHALL BE DESIGNED AND CONSTRUCTED IN ACCORDANCE WITH THE N.C.-R

THERMAL & MOISTURE PROTECTION (continued)

9. HARDBOARD SIDING SHALL CONFORM TO THE REQUIREMENTS OF AHA A135.6 AND, WHERE USED STRUCTURALLY, SHALL BE SO IDENTIFIED BY THE LABEL OF AN APPROVED AGENCY.

10. WOOD VENEERS ON EXTERIOR WALLS OF BUILDINGS OF TYPES I, II, III, AND IV CONSTRUCTION SHALL BE NOT LESS THAN 1-INCH NOMINAL THICKNESS, 0.438-INCH EXTERIOR HARDBOARD SIDING OR 0.375-INCH EXTERIOR-TYPE WOOD STRUCTURAL PANELS OR PARTICLE-BOARD AND SHALL CONFORM TO THE REQUIREMENTS OF THE N.C.-R

11. FIBER-CEMENT LAP SIDING HAVING A MAXIMUM WIDTH OF 12 INCHES SHALL COMPLY WITH THE REQUIREMENTS OF ASTM C1186, TYPE A, MINIMUM GRADE II. LAP SIDING SHALL BE LAPPED A MINIMUM OF 11/4 INCHES (32 MM) AND LAP SIDING NOT HAVING TONGUE-AND-GROOVE END JOINTS SHALL HAVE THE ENDS SEALED WITH CAULKING, INSTALLED WITH AN H-SECTION JOINT COVER, LOCATED OVER A STRIP OF FLASHING OR SHALL BE DESIGNED TO COMPLY WITH NC-R. LAP SIDING COURSES MAY BE INSTALLED WITH THE FASTENER HEADS EXPOSED OR CONCEALED, ACCORDING TO NC-R OR APPROVED MANUFACTURERS' INSTALLATION INSTRUCTIONS.

INSULATION

1. INSULATING MATERIALS, INCLUDING FACINGS, SUCH AS VAPOR RETARDERS OR VAPER-PERMEABLE MEMBRANES,INSTALLED WITHIN FLOOR-CEILING ASSEMBLIES, ROOF-CEILING ASSEMBLIES, WALL-ASSEMBLIES, CRAWL SPACES AND ATTICS SHALL HAVE A FLAME-SPREAD INDEX NOT TO EXCEED 25 WITH AN ACCOMPANYING SMOKE-DEVELOPED INDEX NOT TO EXCEED 450 WHEN TESTED IN ACCORDANCE WITH ASTM E 84 OR UL 723.

2. DUCT INSULATION MATERIALS SHALL CONFORM TO THE FOLLOWING REQUIREMENTS OF THE N.C.-R

3. INSULATION AND COVERING ON PIPE AND TUBING SHALL HAVE A FLAME-SPREAD INDEX OF NOT MORE THAN 25 AND A SMOKE-DEVELOPED INDEX OF NOT MORE THAN 450. SEE EXCEPTIONS.

4. ALL EXPOSED INSULATION MATERIALS INSTALLED ON ATTIC FLOORS SHALL HAVE A CRITICAL RADIANT FLUX OF NOT LESS THAN 0.12 WATT PER SQUARE CENTIMETER PER N.C.-R TESTS FOR CRITIAL RADIANT FLUX SHALL BE MADE IN ACCORDANCE WITH ASTM E 970.

5. THE USE OF ABOVE DECK THERMAL INSULATION SHALL BE PERMITTED PROVIDED SUCH INSULATION IS COVERED WITH AN APPROVED ROOF COVERING AND PASSES FM 4450 OR UL 1256 PER N.C.-R.

6. CELLULOSE LOOSE-FILL INSULATION SHALL COMPLY WITH CPSC 16 CFR, PARTS 1209 AND 1404. EACH PACKAGE OF SUCH INSULATING MATERIAL SHALL BE CLEARLY LABELED IN ACCORDANCE WITH CPSC 16 CFR, PARTS 1209 AND 1404.

7. INSULATION IN FLOOR-CEILING ASSEMBLIES, ROOF-CEILING ASSEMBLIES, WALLS, CRAWL SPACES OR ATTICS SHALL BE EITHER OF THE BLOWN-IN CELLULOSE TYPE OR FIBERGLASS BATTS OR BLANKET TYPE PER BUILDER'S SPECIFICATIONS.

8. THE ENERGY EFFICIENCY REQUIREMENTS INCLUDING I.E.C.C. BUT NOT LIMITED TO INSULATION "R" VALUES, PERCENTAGE OF GLAZING "U" VALUES, ETC. SHALL BE DETERMINED BY THE ADOPTED STATE AND LOCAL ENERGY CODE EQUIREMENTS. REFER TO MECHANICAL PLANS FOR SPECIFICATIONS.

9. THE BUILDING THERMAL ENVELOPE SHALL BE DURABLY SEALED WITH AN AIR BARRIER SYSTEM TO LIMIT INFILTRATION. THE SEALING METHODS BETWEEN DISSIMILAR MATERIALS SHALL ALLOW FOR DIFFERENTIAL EXPANSION AND CONTRACTION. FOR ALL HOMES, WHERE PRESENT, THE FOLLOWING SHALL BE CAULKED, GASKETED, WEATHERSTRIPPED OR OTHERWISE SEALED WITH AN AIR BARRIER MATERIAL OR SOLID MATERIAL CONSISTENT WITH APPENDIX E-2.3 AND E-2.4 OF THE NC-R:
1. BLOCKING AND SEALING FLOOR/CEILING SYSTEMS AND UNDER KNEE WALLS OPEN TO UNCONDITIONED OR EXTERIOR SPACE.
2. CAPPING AND SEALING SHAFTS OR CHASES, INCLUDING FLUE SHAFTS.
3. CAPPING AND SEALING SOFFIT OR DROPPED CEILING AREAS.

10. FRAMED CAVITY WALLS. THE EXTERIOR THERMAL ENVELOPE WALL INSULATION SHALL BE INSTALLED IN SUBSTANTIAL CONTACT AND CONTINUOUS ALIGNMENT WITH THE BUILDING ENVELOPE AIR BARRIER. INSULATION SHALL BE SUBSTANTIALLY FREE FROM INSTALLATION GAPS, VOIDS, OR COMPRESSION. FOR FRAMED WALLS, THE CAVITY INSULATION SHALL BE ENCLOSED ON ALL SIDES WITH A RIGID MATERIAL OR AN AIR BARRIER MATERIAL. WALL INSULATION SHALL BE ENCLOSED AT THE FOLLOWING LOCATIONS WHEN INSTALLED ON EXTERIOR WALLS PRIOR TO BEING COVERED BY SUBSEQUENT CONSTRUCTION, CONSISTENT WITH APPENDIX E-2.3 AND E-2.4 OF NC-R:
1. TUBS
2. SHOWERS
3. STAIRS
4. FIREPLACE UNITS
ENCLOSURE OF WALL CAVITY INSULATION ALSO APPLIES TO WALLS THAT ADJOIN ATTIC SPACES BY PLACING A RIGID MATERIAL OR AIR BARRIER MATERIAL ON THE ATTIC SIDE.

DOORS & WINDOWS

1. SEE FLOOR PLANS AND ELEVATIONS FOR SIZES AND TYPES OF DOORS AND WINDOWS AND FOR ANY DIVIDED LITE PATTERNS. COLORS SHALL BE APPROVED BY THE BUILDER AND ARCHITECT.

2. OPENINGS FROM A PRIVATE GARAGE DIRECTLY INTO A ROOM USED FOR SLEEPING PURPOSES SHALL NOT BE PERMITTED. OTHER OPENINGS BETWEEN THE GARAGE AND RESIDENCE SHALL EQUIPPED WITH SOLID WOOD DOORS NOT LESS THAN 1 3/8 INCHES IN THICKNESS, SOLID OR HONEYCOMB CORE STEEL DOORS NOT LESS THAN 1 3/8 INCHES THICK, OR 20-MINUTE FIRE-RATED DOORS.

3. NO DOUBLE FRENCH DOORS SHALL BE USED UNLESS THERE IS A SUFFICIENT OVERHANG OR COVERED PATIO COVERING THESE DOORS. NO DOUBLE WOOD FRENCH DOORS SHALL BE USED IN ANY CASE.

4. PROVIDE SECURITY HARDWARE FOR ALL DOORS AND WINDOWS IN CONFORMANCE WITH ALL STATE AND LOCAL CODE REQUIREMENTS.

5. ALL AUTOMATIC GARAGE DOOR OPENERS REQUIRE THE INCLUSION OF A PHOTOELECTRIC SENSOR, EDGE SENSOR OR SOME OTHER SIMILAR DEVICE FOR REMOTE OPERATION AND AS A SAFETY PRECAUTION TO PREVENT THE DOOR FROM CLOSING WHEN SOMETHING IS BLOCKING THE PATH OF THE DOOR. SEE MANUFACTURER'S INSTALLTION INSTRUCTIONS.

6. ALL MANUFACTURED WINDOWS AND SLIDING GLASS DOORS SHALL MEET THE AIR INFILTRATION STANDARDS OF THE CURRENT AMERICAN NATIONAL STANDARDS INSTITUTE A.S.T.M. E283-73 WITH A PRESSURE DIFFERENTIAL OF 1.57 POUNDS PER SQUARE FOOT AND SHALL BE CERTIFIED AND LABELED.

7. BASEMENTS, HABITABLE ATTICS AND EVERY SLEEPING ROOM SHALL HAVE AT LEAST ONE OPENABLE EMERGENCY ESCAPE AND RESCUE OPENING

8. WHERE EMERGENCY ESCAPE AND RESCUE OPENINGS ARE PROVIDED THEY SHALL HAVE A SILL HEIGHT OF NOT MORE THAN 44 INCHES ABOVE THE FLOOR.

9. EMERGENCY ESCAPE AND RESCUE OPENINGS WITH A FINISHED SILL HEIGHT BELOW THE ADJACENT GROUND ELEVATION SHALL BE PROVIDED WITH A WINDOW WELL.

DOORS & WINDOWS (continued)

10. ALL EMERGENCY ESCAPE AND RESCUE OPENINGS SHALL HAVE A MINIMUM NET CLEAR OPENING OF NOT LESS THAN 5 SQUARE FEET IN THE CASE OF A GROUND FLOOR LEVEL WINDOW AND NOT LESS THAN 5.7 SQUARE FEET IN THE CASE OF AN UPPER STORY WINDOW.

11. ALL EMERGENCY ESCAPE AND RESCUE OPENINGS SHALL HAVE A MINIMUM NET CLEAR OPENING HEIGHT OF 24 INCHES.

12. ALL EMERGENCY ESCAPE AND RESCUE OPENINGS SHALL HAVE A MINIMUM NET CLEAR OPENING WIDTH OF 20 INCHES.

13. EMERGENCY ESCAPE AND RESCUE OPENINGS SHALL BE OPERATIONAL FROM THE INSIDE OF THE ROOM WITHOUT THE USE OF KEYS, TOOLS OR SPECIAL KNOWLEDGE.

14. THE MINIMUM HORIZONTAL AREA OF THE WINDOW WELL SHALL BE 9 SQUARE FEET, WITH A MINIMUM HORIZONTAL PROJECTION AND WIDTH OF 36 INCHES. THE AREA OF THE WINDOW WELL SHALL ALLOW EMERGENCY ESCAPE AND RESCUE OPENING TO BE FULLY OPENED PER THE N.C.-R THE LADDER OR STEPS REQUIRED SHALL BE PERMITTED TO ENCROACH A MAXIMUM OF 6" INTO THE REQUIRED DIMENSIONS OF THE WINDOW WELL.

15. WINDOW WELLS WITH A VERTICAL DEPTH GREATER THAN 44 INCHES SHALL BE EQUIPPED WITH A PERMANENTLY AFFIXED LADDER OR STEPS USABLE WITH THE WINDOW IN THE FULLY OPEN POSITION.

16. BARS, GRILLES, COVERS, SCREENS OR SIMILAR DEVICES ARE PERMITTED TO BE PLACED OVER EMERGENCY ESCAPE AND RESCUE OPENINGS, BULKHEAD ENCLOSURES, OR WINDOW WELLS THAT SERVE SUCH OPENINGS, PROVIDED THE MINIMUM NET CLEAR OPENING SIZE COMPLIES WITH THE N.C.-R AND SUCH DEVICES SHALL BE RELEASABLE OR REMOVABLE FROM THE INSIDE WITHOUT THE USE OF A KEY, TOOL, SPECIAL KNOWLEDGE OR FORCE GREATER THAN THAT WHICH IS REQUIRED FOR NORMAL OPERATION OF THE ESCAPE AND RESCUE OPENING.

17. ALL INTERIOR EGRESS DOORS AND A MINIMUM OF ONE EXTERIOR EGRESS DOOR SHALL BE READILY OPENABLE FROM THE SIDE FROM WHICH EGRESS IS TO BE MADE WITHOUT THE USE OF A KEY OR SPECIAL KNOWLEDGE OR EFFORT.

GLAZING & SAFETY GLAZING

1. HABITABLE ROOMS SHALL HAVE AN AGGREGATE GLAZING AREA OF NOT LESS THAN 8 PERCENT OF THE FLOOR AREA OF SUCH ROOMS. NATURAL VENTILATION SHALL BE THROUGH WINDOWS, SKYLIGHTS, DOORS, LOUVERS OR OTHER APPROVED OPENINGS TO THE OUTDOOR AIR. SUCH OPENINGS SHALL BE PROVIDED WITH READY ACCESS OR SHALL OTHERWISE BE READILY CONTROLLABLE BY THE BUILDING OCCUPANTS. THE OPENABLE AREA TO THE OUTDOORS SHALL BE NOT LESS THAN 4 PERCENT OF THE FLOOR AREA BEING VENTILATED.

2. BATHROOMS, WATER CLOSET COMPARTMENTS AND OTHER SIMILAR ROOMS SHALL BE PROVIDED WITH AGGREGATE GLAZING AREAS IN WINDOWS OF NOT LESS THAN 3 SQUARE FEET, ONE-HALF OF WHICH MUST BE OPENABLE.

3. EXCEPT AS INDICATED, EACH PANE OF GLAZING INSTALLED IN HAZARDOUS LOCATIONS SHALL BE PROVIDED WITH MANUFACTURER'S DESIGNATION SPECIFYING WHO APPLIED THE DESIGNATION, DESIGNATING THE TYPE OF GLASS AND THE SAFETY GLAZING STANDARD WITH WHICH IT COMPLIES, WHICH IS VISIBLE IN THE FINAL INSTALLATION. THE DESIGNATION SHALL BE ACID ETCHED, SANDBLASTED, CERAMIC-FIRED, LASER ETCHED, EMBOSSED, OR BE OF A TYPE WHICH ONCE APPLIED CANNOT BE REMOVED WITHOUT BEING DESTROYED.

4. INDIVIDUAL GLAZED AREAS, INCLUDING GLASS MIRRORS IN HAZARDOUS LOCATIONS SHALL PASS THE TEST REQUIREMENTS OF CPSC 16 CFR, PART 1201. GLAZING SHALL COMPLY WITH CPSC 16.

5. THE FOLLOWING SHALL BE CONSIDERED SPECIFIC HAZARDOUS LOCATIONS FOR THE PURPOSES OF GLAZING:
   1. GLAZING IN ALL FIXED AND OPERABLE PANELS OF SWINGING, SLIDING AND BIFOLD DOORS
   2. GLAZING IN AN INDIVIDUAL FIXED OR OPERABLE PANEL IN THE SAME PLANE AS A DOOR WHERE THE NEAREST VERTICAL EDGE IS WITHIN 24-INCHES OF THE DOOR IN A CLOSED POSITION AND WHOSE BOTTOM EDGE IS LESS THAN 60 INCHES ABOVE THE FLOOR OR WALKING SURFACE.
   3. GLAZING IN AN INDIVIDUAL FIXED OR OPERABLE PANEL THAT MEETS ALL OF THE FOLLOWING CONDITIONS:
      - 3.1 EXPOSED AREA OF AN INDIVIDUAL PANE LARGER THAN 9 SQUARE FEET.
      - 3.2 BOTTOM EDGE LESS THAN 18 INCHES ABOVE THE FLOOR.
      - 3.3 TOP EDGE MORE THAN 36 INCHES ABOVE THE FLOOR.
      - 3.4 ONE OR MORE WALKING SURFACES WITHIN 36 INCHES, MEASURED HORIZONTALLY AND IN A STRAIGHT LINE, OF THE GLAZING.
   4. GLAZING IN GUARDS AND RAILINGS, INCLUDING STRUCTURAL BALUSTER PANELS AND NONSTRUCTURAL IN-FILL PANELS, REGARDLESS OF AREA OR HEIGHT ABOVE A WALKING SURFACE.
   5. GLAZING IN DOORS AND ENCLOSURES FOR HOT TUBS, WHIRLPOOLS, SAUNAS, STEAM ROOMS, BATHTUBS AND SHOWERS. GLAZING ENCLOSING THESE COMPARTMENTS WHERE THE BOTTOM EXPOSED EDGE OF THE GLAZING IS LESS THAN 60 INCHES MEASURED VERTICALLY ABOVE ANY STANDING OR WALKING SURFACE.
   6. GLAZING IN WALLS AND FENCES ENCLOSING INDOOR AND OUTDOOR SWIMMING POOLS, HOT TUBS AND SPAS WHERE THE BOTTOM EDGE OF THE GLAZING IS LESS THAN 60 INCHES ABOVE A WALKING SURFACE AND WITHIN 60 INCHES HORIZONTALLY OF THE WATER'S EDGE. THIS SHALL APPLY TO SINGLE GLAZING AND ALL PANES IN MULTIPLE GLAZING.
   7. GLAZING ADJACENT TO STAIRWAYS, LANDINGS AND RAMPS WITHIN 36 INCHES HORIZONTALLY OF A WALKING SURFACE WHEN THE EXPOSED SURFACE OF THE GLAZING IS LESS THAN 36 INCHES ABOVE THE PLANE OF THE ADJACENT WALKING SURFACE.
   8. GLAZING ADJACENT TO THE LANDING AT THE BOTTOM OF STAIRWAYS WHERE THE GLAZING IS LESS THAN 36 INCHES ABOVE THE LANDING AND WITHIN A 60-INCH HORIZONTAL ARC LESS THAN 180 DEGREES FROM THE BOTTOM TREAD NOSING.

6. HINGED SHOWER DOORS SHALL OPEN OUTWARD.

7. GLAZING SHALL BE IN ACCORDANCE WITH ENERGY COMPLIANCE CALCULATIONS BASED ON A LOCALLY ADOPTED ENERGY CODE, THE MODEL ENERGY CODE OR THE INTERNATIONAL ENERGY CONSERVATION CODE.

8. IN DWELLING UNITS, WHERE THE OPENING OF AN OPERABLE WINDOW IS LOCATED MORE THAN 72 INCHES (1829 MM) ABOVE THE FINISHED GRADE OR SURFACE BELOW, THE LOWEST PART OF THE CLEAR OPENING OF THE WINDOW SHALL BE A MINIMUM OF 24 INCHES (610 MM) ABOVE THE FINISHED FLOOR OF THE ROOM IN WHICH THE WINDOW IS LOCATED. OPERABLE SECTIONS OF WINDOWS SHALL NOT PERMIT OPENINGS THAT ALLOW PASSAGE OF A 4 INCH (102 MM) DIAMETER SPHERE WHERE SUCH OPENINGS ARE LOCATED WITHIN 24 INCHES (610 MM) OF THE FINISHED FLOOR.

FINISHES

GYPSUM BOARD

1. GYPSUM WALLBOARD SHALL BE INSTALLED IN CONFORMANCE WITH THE CURRENT EDITION OF THE NORTH CAROLINA RESIDENTIAL CODE AND ALL STATE AND LOCAL BUILDING CODES. THE MOST STRINGENT REQUIREMENTS SHALL GOVERN.

2. MATERIALS. ALL GYPSUM BOARD MATERIALS AND ACCESSORIES SHALL CONFORM TO ASTM C 22, C 475, C 514, C 1002, C 1047, C 1177, C 1178, C 1278, C 1396, OR C 1658 AND SHALL BE INSTALLED IN ACCORDANCE WITH THE PROVISIONS OF THE N.C.-R. ADHESIVES FOR THE INSTALLATION OF GYPSUM BOARD SHALL CONFORM TO ASTM C 557.

3. GYPSUM BOARD MATERIALS SHALL CONFORM TO THE APPROPRIATE STANDARDS LISTED IN THE N.C.-R WHERE REQUIRED FOR FIRE PROTECTION, CONFORM TO THE N.C.-R

4. INTERIOR GYPSUM BOARD SHALL NOT BE INSTALLED WHERE IT IS DIRECTLY EXPOSED TO THE WEATHER OR TO WATER.

5. ALL EDGES AND ENDS OF GYPSUM BOARD SHALL OCCUR ON THE FRAMING MEMBERS, EXCEPT THOSE EDGES AND ENDS THAT ARE PERPENDICULAR TO THE FRAMING MEMBERS. EDGES AND ENDS OF GYPSUM BOARD SHALL BE IN MODERATE CONTACT EXCEPT IN CONCEALED SPACES WHERE FIRE-RESISTACE-RATED CONSTRUCTION, SHEAR RESISTANCE, OR DIAPHRAGM ACTION IS NOT REQUIRED. CEALED SPACES WHERE FIRE-RESISTACE-RATED CONSTRUCTION.

6. FASTENERS AT THE TOP AND BOTTOM PLATES OF VERTICAL ASSEMBLIES, OR THE EDGES AND ENDS OF HORIZONTAL ASSEMBLIES PERPENDICULAR TO SUPPORTS, AND AT THE WALL LINE MAY BE OMITTED EXCEPT ON SHEAR-RESISTING ELEMENTS OR FIRE- RESISTIVE ASSEMBLIES. FASTENERS SHALL BE APPLIED IN SUCH A MANNER AS NOT TO FRACTURE THE FACE PAPER WITH THE FASTENER HEAD.

7. GYPSUM BOARD USED AS THE BASE OR BACKER FOR ADHESIVE APPLICATION OF CERAMIC TILE OR OTHER REQUIRED NON-ABSORBENT FINISH MATERIAL SHALL CONFORM TO ASTM C 1396, C 1178 OR C1278. USE OF WATER-RESISTANT GYPSUM BACKING BOARD SHALL BE PERMITTED ON CEILINGS WHERE FRAMING SPACING DOES NOT EXCEED 12 INCHES ON CENTER FOR 1/2-INCH-THICK OR 16 INCHES FOR 5/8-INCH-THICK GYPSUM BOARD. WATER-RESISTANT GYPSUM BOARD SHALL NOT BE INSTALLED OVER A VAPOR RETARDER IN A SHOWER OR TUB COMPARTMENT. CUT OR EXPOSED EDGES, INCLUDING THOSE AT WALL INTERSECTIONS, SHALL BE SEALED AS RECOMMENDED BY THE MANUFACTURER.

8. WATER RESISTANT GYPSUM BACKING BOARD SHALL NOT BE USED WHERE THERE WILL BE DIRECT EXPOSURE TO WATER, OR IN AREAS SUBJECT TO CONTINUOUS HIGH HUMIDITY.

9. WHEN APPLYING A WATER-BASED TEXTURE MATERIAL, THE MINIMUM GYPSUM BOARD THICKNESS SHALL BE INCREASED FROM 3/8 INCH TO 1/2 INCH FOR 16-INCH ON CENTER FRAMING, AND FROM 1/2 INCH TO 5/8 INCH FOR 24-INCH ON CENTER FRAMING OR 1/2 INCH SAG-RESISTANT GYPSUM CEILING BOARD SHALL BE USED.

EXTERIOR LATH

1. ALL LATH AND LATH ATTACHMENTS SHALL BE OF CORROSION-RESISTANT MATERIAL.

2. BACKING OR A LATH SHALL PROVIDE SUFFICIENT RIGIDITY TO PERMIT PLASTER APPLICATION.

3. WHERE LATH ON VERTICAL SURFACES EXTENDS BETWEEN RAFTERS OR OTHER SIMILAR PROJECTING MEMBERS, SOLID BACKING SHALL BE INSTALLED TO PROVIDE SUPPORT FOR LATH AND ATTACHMENTS.

4. GYPSUM LATH OR GYPSUM BOARD SHALL NOT BE USED, EXCEPT THAT ON HORIZONTAL SUPPORTS OF CEILINGS OR ROOF SOFFITS IT MAY BE USED AS BACKING FOR METAL LATH OR WIRE FABRIC LATH AND CEMENT PLASTER.

5. UNLESS SPECIFIED OTHERWISE, ALL WALL COVERINGS SHALL BE SECURELY FASTENED PER THE N.C.-R OR WITH OTHER APPROVED ALUMINUM, STAINLESS STEEL, ZINC-COATED OR OTHER APPROVED CORROSION-RESISTIVE FASTENERS. WHERE THE BASIC WIND SPEED IS 110 MILES PER HOUR OR HIGHER, THE ATTACHMENT OF WALL COVERINGS SHALL BE DESIGNED TO RESIST THE COMPONENT AND CLADDING LOADS SPECIFIED AND ADJUSTED FOR HEIGHT AND EXPOSURE.

6. A MINIMUM 0.019-INCH (NO. 26 GALVANIZED SHEET GAGE), CORROSION-RESISTANT WEEP SCREED OR PLASTIC WEEP SCREED, WITH A MINIMUM VERTICAL ATTACHMENT FLANGE OF 31/2 INCHES SHALL BE PROVIDED AT OR BELOW THE FOUNDATION PLATE LINE ON EXTERIOR STUD WALLS IN ACCORDANCE WITH ASTM C 926. THE WEEP SCREED SHALL BE PLACED A MINIMUM OF 4 INCHES ABOVE THE EARTH OR 2 INCHES ABOVE PAVED AREAS AND SHALL BE OF A TYPE THAT WILL ALLOW TRAPPED WATER TO DRAIN TO THE EXTERIOR OF THE BUILDING. THE WEATHER-RESISTANT BARRIER SHALL LAP THE ATTACHMENT FLANGE. THE EXTERIOR LATH SHALL COVER AND TERMINATE ON THE ATTACHMENT FLANGE OF THE WEEP SCREED.

EXTERIOR PLASTER

1. PLASTERING WITH PORTLAND CEMENT PLASTER SHALL BE NOT LESS THAN THREE COATS WHEN APPLIED OVER METAL LATH OR WIRE LATH AND SHALL BE NOT LESS THAN TWO COATS WHEN APPLIED OVER MASONRY, CONCRETE, PRESSURE-PRESERVATIVE TREATED WOOD OR DECAY-RESISTANT WOOD OR GYPSUM BACKING. IF THE PLASTER SURFACE IS COMPLETELY COVERED BY VENEER OR OTHER FACING MATERIAL OR IS COMPLETELY CONCEALED, PLASTER APPLICATION NEED BE ONLY TWO COATS, PROVIDED THE TOTAL THICKNESS IS AS SET FORTH PER THE N.C.-R

   ON WOOD-FRAME CONSTRUCTION WITH AN ON-GRADE FLOOR SLAB SYSTEM, EXTERIOR PLASTER SHALL BE APPLIED TO COVER, BUT NOT EXTEND BELOW, LATH, PAPER AND SCREED.

   THE PROPORTION OF AGGREGATE TO FIBER CEMENT MATERIALS SHALL BE AS SET FORTH PER THE N.C.-R

2. ONLY APPROVED PLASTICITY AGENTS AND APPROVE AMOUNTS THEREOF MAY BE ADDED TO PORTLAND CEMENT. WHEN PLASTIC CEMENT IS USED, NO ADDITIONAL LIME OR PLASTICIZERS SHALL BE ADDED. HYDRATED LIME OR THE EQUIVALENT AMOUNT OF LIME PUTTY USED AS A PLASTICIZER MAY BE ADDED TO CEMENT PLASTER OR CEMENT AND LIME PLASTER IN AN AMOUNT NOT TO EXCEED THAT SET FORTH IN ASTM C 926.

3. GYPSUM PLASTER SHALL NOT BE USED ON EXTERIOR SURFACES.

4. PLASTER COATS SHALL BE PROTECTED FROM FREEZING FOR A PERIOD OF NOT LESS THAN 24 HOURS AFTER SET HAS OCCURRED. PLASTER SHALL BE APPLIED WHEN THE AMBIENT TEMPERATURE IS HIGHER THAN 40 DEGREES F (4 DEGREES C), UNLESS PROVISIONS ARE MADE TO KEEP CEMENT PLASTER WORK ABOVE 40 DEGREES F (4 DEGREES C), PRIOR TO & DURING APPLICATION AND 48 HOURS THEREAFTER.

5. COLOR AND FINISH TO BE SELECTED AND APPROVED BY OWNER/ BUILDER AND ARCHITECT.

6. A 1-COAT EXTERIOR PLASTER SYSTEM SUCH AS "MAGNA WALL" I.C.C. NO. ER-4776, "EXPO FIBREWALL" I.C.C. NO. ER-4368, OR APPROVED EQUAL MAY BE USED IN LIEU OF A 3-COAT EXTERIOR PLASTER SYSTEM.

kb HOME®

NORTH CAROLINA
50' SERIES

KB HOME
NORTH CAROLINA DIVISION
4518 S. MIAMI BLVD.
SUITE 180
DURHAM, NC 27703
TEL: (919) 768-7988
FAX: (919) 472-0582

2018 NORTH CAROLINA STATE BUILDING CODES

ISSUE DATE: 09/11/18
PROJECT No.: 1350999:57
DIVISION MGR.: MP
REVISIONS: 08/01/19

1 — 2018 CODE UPDATE NC19015NCP/ 03/15/19 / CTD
2 — DIVISION REVISIONS NC19022NCP/ 03/15/19 / CTD
3 — DIVISION REVISIONS NC19028NCP/ 04/22/19 / FAE
4 — DIVISION REVISIONS NC19047NCP/ 08/01/19 / FAE
5 — DIVISION REVISIONS NC20038NCP/ 10/29/20 / KBA

PLAN: 243.2939-R
SHEET: GN2

SPEC. LEVEL 1
RALEIGH-DURHAM
50' SERIES

These designs and drawings are CONFIDENTIAL, and the exclusive property of KB Home Corporation and are not to be disclosed without the express permission of KB Home Corporation. They may not be used or duplicated without the express permission of KB Home Corporation. Copyright 2014 © KB Home Corporation, all rights reserved.

MECHANICAL & PLUMBING

H.V.A.C.

1. ALL MATERIALS AND CONSTRUCTION METHODS SHALL BE IN CONFORMANCE WITH THE NORTH CAROLINA RESIDENTIAL AND MECHANICAL CODE. INSTALLATIONS OF MECHANICAL APPLIANCES, EQUIPMENT AND SYSTEMS NOT ADDRESSED BY THIS CODE SHALL COMPLY WITH THE APPLICABLE PROVISIONS OF THE NORTH CAROLINA RESIDENTIAL AND FUEL GAS CODE.

2. CONTRACTOR SHALL DESIGN ENTIRE H.V.A.C. SYSTEM AND SUBMIT DRAWINGS FOR OWNER/BUILDER'S APPROVAL PRIOR TO ORDERING MATERIALS OR EQUIPMENT.

3. WHERE AIR CONDITIONING IS AN OPTIONAL FEATURE, HEATING SYSTEMS MUST BE DESIGNED AND DUCT WORK SIZED TO ACCOMMODATE FUTURE AIR CONDITIONING NEEDS.

4. WHERE THE PRIMARY HEATING SYSTEM IS A FORCED-AIR FURNACE, AT LEAST ONE THERMOSTAT PER DWELLING UNIT SHALL BE CAPABLE OF CONTROLLING THE HEATING AND COOLING SYSTEM ON A DAILY SCHEDULE TO MAINTAIN DIFFERENT TEMPERATURE SET POINTS AT DIFFERENT TIMES OF THE DAY. THIS THERMOSTAT SHALL INCLUDE THE CAPABILITY TO SET BACK OR TEMPORARILY OPERATE THE SYSTEM TO MAINTAIN ZONE TEMPERATURES DOWN TO 55 DEG. F (13 C) OR UP TO 85 DEG. F (29 C).

5. ALL DUCTWORK SHALL CONFORM TO THE REQUIREMENTS OF THE N.C.-R

6. COMBUSTION AIR SHALL BE PROVIDED FOR FORCED AIR UNITS IN ACCORDANCE WITH N.C.-R

7. CONTRACTOR TO PROVIDE BOOT IN DUCTWORK WHEN OPTIONAL "HONEYWELL" OR "CARRIER" ELECTRONIC AIR CLEANER IS PROVIDED.

8. DUCTS IN THE GARAGE AND DUCTS PENETRATING THE WALLS OR CEILINGS SEPARATING THE DWELLING FROM THE GARAGE SHALL BE CONSTRUCTED OF A MINIMUM NO. 26 GAGE SHEET STEEL, OR OTHER APPROVED MATERIAL AND SHALL HAVE NO OPENINGS INTO THE GARAGE PER N.C.-R

9. EXTERIOR-GRADE INSTALLATIONS, EQUIPMENT AND APPLIANCES INSTALLED ABOVE GRADE LEVEL SHALL BE SUPPORTED ON A SOLID BASE OR APPROVED MATERIAL A MINIMUM OF 2 INCHES THICK.

10. UNDER-FLOOR INSTALLATION. SUSPENDED EQUIPMENT SHALL BE A MINIMUM OF 6 INCHES ABOVE THE ADJOINING GRADE.

11. CRAWL SPACE SUPPORTS. IN A CRAWL SPACE, A MINIMUM OF 2-INCH THICK SOLID BASE, 2-INCH (51 MM) THICK FORMED CONCRETE, OR STACKED MASONRY UNITS HELD IN PLACE BY MORTAR OR OTHER APPROVED METHOD. THE WATER HEATER SHALL BE SUPPORTED NOT LESS THAN 2 INCHES ABOVE GRADE.

12. DRAINAGE. BELOW-GRADE INSTALLATIONS SHALL BE PROVIDED WITH A NATURAL DRAIN OR AN AUTOMATIC LIFT OR SUMP PUMP. FOR PIT REQUIREMENTS REFER TO N.C.-M

VENTING

1. IN LIEU OF REQUIRED EXTERIOR OPENINGS FOR NATURAL VENTILATION IN BATHROOMS CONTAINING A BATHTUB, SHOWER OR COMBINATION THEREOF, A MECHANICAL VENTILATION SYSTEM MAY BE PROVIDED. THE MINIMUM VENTILATION RATES SHALL BE 50 CFM FOR INTERMITTENT VENTILATION OR 20 CFM FOR CONTINUOUS VENTILATION. VENTILATION AIR FROM THE SPACE SHALL BE EXHAUSTED DIRECTLY TO THE OUTSIDE PER N.C.-R

2. EXHAUST DUCTS SHALL TERMINATE OUTSIDE THE BUILDING AND SHALL BE EQUIPPED WITH BACKDRAFT DAMPERS.

3. RANGE HOODS SHALL DISCHARGE TO THE OUTDOORS THROUGH A DUCT. THE DUCT SERVING THE HOOD SHALL HAVE A SMOOTH INTERIOR SURFACE, SHALL BE AIR TIGHT, SHALL BE EQUIPPED WITH A BACK-DRAFT DAMPER AND SHALL BE INDEPENDENT OF ALL OTHER EXHAUST SYSTEMS. DUCTS SERVING RANGE HOODS SHALL NOT TERMINATE IN AN ATTIC OR CRAWL SPACE OR AREAS INSIDE THE BUILDING. DUCTS SERVING RANGE HOODS SHALL BE CONSTRUCTED OF GALVANIZED STEEL, STAINLESS STEEL OR COPPER.

4. WHERE INSTALLED IN ACCORDANCE WITH THE MANUFACTURER'S INSTALLATION INSTRUCTIONS, AND WHERE MECHANICAL OR NATURAL VENTILATION IS OTHERWISE PROVIDED, LISTED AND LABELED DUCTLESS RANGE HOODS SHALL NOT BE REQUIRED TO DISCHARGE TO THE OUTDOORS PER N.C.-M

5. DUCTS FOR DOMESTIC KITCHEN COOKING APPLIANCES EQUIPPED WITH DOWN DRAFT EXHAUST SYSTEMS SHALL BE PERMITTED TO BE CONSTRUCTED OF SCHEDULE 40 PVC PIPE PROVIDED THAT THE INSTALLATION COMPLIES WITH ALL OF THE FOLLOWING PER N.C.-M:

   A. THE DUCT SHALL BE INSTALLED UNDER A CONCRETE SLAB POURED ON GRADE.

   B. THE UNDERFLOOR TRENCH IN WHICH THE DUCT IS INSTALLED SHALL BE COMPLETELY BACKFILLED WITH SAND OR GRAVEL.

   C. THE PVC DUCT SHALL EXTEND NOT GREATER THAN 1 INCH ABOVE THE INDOOR CONCRETE FLOOR SURFACE.

   D. THE PVC DUCT SHALL EXTEND NOT GREATER THAN 1 INCH ABOVE GRADE OUTSIDE THE BUILDING.

   E. THE PVC DUCTS SHALL BE SOLVENT CEMENTED.

6. EXHAUST HOOD SYSTEMS CAPABLE OF EXHAUSTING IN EXCESS OF 400 CFM SHALL BE PROVIDED WITH MAKEUP AIR AT A RATE APPROXIMATELY EQUAL TO THE EXHAUST AIR RATE THAT IS IN EXCESS OF 400 CUBIC FEET PER MINUTE. SUCH MAKEUP AIR SYSTEMS SHALL BE EQUIPPED WITH A MEANS OF CLOSURE AND SHALL BE AUTOMATICALLY CONTROLLED TO START AND OPERATE SIMULTANEOUSLY WITH THE EXHAUST SYSTEM. DAMPERS SHALL BE ACCESSIBLE FOR INSPECTION, SERVICE, REPAIR AND REPLACEMENT WITHOUT REMOVING PERMANENT CONSTRUCTION

7. DOMESTIC WATER HEATERS, UNLESS SPECIFIED OTHERWISE BY THE MANUFACTURER'S INSTALLATION INSTRUCTIONS, SHALL BE VENTED TO THE OUTSIDE AIR BY A TYPE 'B' VENT AND COMPLY WITH THE REQUIREMENTS OF THE N.C.-M

PLUMBING

1. A POTABLE WATER SUPPLY SYSTEM SHALL BE DESIGNED, INSTALLED AND MAINTAINED IN SUCH A MANNER SO AS TO PREVENT CONTAMINATION FROM NONPOTABLE LIQUIDS, SOLIDS OR GASES BEING INTRODUCED INTO THE POTABLE WATER SUPPLY THROUGH CROSS-CONNECTIONS OR ANY OTHER PIPING CONNECTIONS TO THE SYSTEM. BACKFLOW PRE- VENTER APPLICATIONS SHALL CONFORM TO N.C.-P.

2. THE SUPPLY LINES OR FITTINGS FOR EVERY PLUMBING FIXTURE SHALL BE INSTALLED SO AS TO PREVENT BACKFLOW. PLUMBING FIXTURE FITTINGS SHALL PROVIDE BACKFLOW PROTECTION IN ACCORDANCE WITH ASME A112.18.1.

MECHANICAL & PLUMBING (continued)

PLUMBING (continued)

3. ALL DEVICES, APPURTENANCES, APPLIANCES AND APPARATUS INTENDED TO SERVE SOME SPECIAL FUNCTION, SUCH AS STERILIZATION, DISTIL-LATION, PROCESSING, COOLING, OR STORAGE OF ICE OR FOODS, AND THAT CONNECT TO THE WATER SUPPLY SYSTEM, SHALL BE PROVIDED WITH PROTECTION AGAINST BACKFLOW AND CONTAMINATION OF THE WATER SUPPLY SYSTEM. WATER PUMPS, FILTERS, SOFTENERS, TANKS AND ALL OTHER APPLIANCES AND DEVICES THAT HANDLE OR TREAT POTABLE WATER SHALL BE PROTECTED AGAINST CONTAMINATION.

4. WATER SERVICE PIPING SHALL BE PROTECTED IN ACCORDANCE WITH N.C.-P SECTIONS AND EXCEPTIONS)

5. FIXTURE FITTINGS, FAUCETS AND DIVERTERS SHALL BE CONNECTED TO THE WATER DISTRIBUTION SYSTEM SO THAT HOT WATER CORRESPONDS TO THE LEFT SIDE OF THE FITTINGS.

6. DIVERTERS FOR SINK FAUCETS WITH A SECONDARY OUTLET CONSISTING OF A FLEXIBLE HOSE AND SPRAY ASSEMBLY SHALL CONFORM TO ASTM A112.18.1 IN ADDITION TO THE REQUIREMENTS IN N.C.-P

7. THE INSTALLATION OF A WATER SERVICE OR WATER DISTRIBUTION PIPE SHALL BE PROHIBITED IN SOIL AND GROUND WATER THAT IS CONTAMINATED. GROUND WATER CONDITIONS SHALL BE REQUIRED TO ASCERTAIN THE ACCEPTABILITY OF THE WATER SERVICE OR WATER DISTRIBUTION PIPING MATERIAL FOR THE SPECIFIC INSTALLATION. WHERE DETRIMENTAL CONDITIONS EXIST, APPROVED ALTERNATIVE MATERIALS OR ROUTING SHALL BE REQUIRED.

8. WATER DISTRIBUTION PIPE SHALL CONFORM TO NSF 61 AND SHALL CONFORM TO ONE OF THE STANDARDS LISTED IN N.C.-PLUMBING. ALL WATER DISTRIBUTION PIPE AND TUBING SHALL HAVE A MINIMUM PRESSURE RATING OF 100 PSI AT 180 DEGREES F.

9. PIPE PASSING THROUGH CONCRETE OR CINDER WALLS AND FLOORS OR OTHER CORROSIVE MATERIAL SHALL BE PROTECTED AGAINST EXTERNAL CORROSION BY A PROTECTIVE SHEATHING OR WRAPPING OR OTHER MEANS THAT WILL WITHSTAND ANY REACTION FROM THE LIME AND ACID OF CONCRETE, CINDER OR OTHER CORROSIVE MATERIAL SHEATHING OR WRAPPING SHALL ALLOW FOR EXPANSION AND CONTRACTION OF PIPING TO PREVENT ANY RUBBING ACTION. MINIMUM WALL THICKNESS OF MATERIAL SHALL BE 0.025-INCH.

10. PIPES PASSING UNDER OR THROUGH WALLS SHALL BE PROTECTED FROM PHYSICAL DAMAGE PER NC-R.

11. PIPING SHALL BE INSTALLED SO AS TO PREVENT DETRIMENTAL STRAINS AND STRESSES IN THE PIPE. PROVISIONS SHALL BE MADE TO PROTECT PIPING FROM DAMAGE RESULTING FROM EXPANSION, CONTRACTION AND STRUCTURAL SETTLEMENT. PIPING SHALL BE INSTALLED TO AVOID STRUCTURAL STRESSES OR STRAINS WITHIN BUILDING COMPONENTS.

12. WATER PIPES INSTALLED IN A WALL EXPOSED TO THE EXTERIOR SHALL BE LOCATED ON THE HEATED SIDE OF THE WALL INSULATION. IN OTHER CASES, WATER, SOIL AND WASTE PIPES SHALL NOT BE INSTALLED OUTSIDE OF A BUILDING, IN UNCONDITIONED ATTICS, UNCONDITIONED UTILITY ROOMS OR IN ANY OTHER PLACE SUBJECTED TO FREEZING TEMPERATURES UNLESS ADEQUATE PROVISION IS MADE TO PROTECT SUCH PIPES FROM FREEZING BY A MINIMUM OF R-6.5 INSULATION DETERMINED AT 75 DEG. F IN ACCORDANCE WITH ASTM C177 OR HEAT OR BOTH.
EXTERIOR WATER SUPPLY SYSTEM PIPING SHALL BE INSTALLED NOT LESS THAN 6 INCHES BELOW THE FROST LINE AND NOT LESS THAN 12 INCHES BELOW GRADE.

13. BUILDING SEWER PIPE SHALL CONFORM TO ONE OF THE STANDARDS LISTED IN N.C.-R.

14. BUILDING SEWER PIPE FITTINGS SHALL BE APPROVED FOR INSTALLATION WITH THE PIPING MATERIAL INSTALLED AND SHALL CONFORM TO THE RESPECTIVE PIPE STANDARDS OR ONE OF THE STANDARDS LISTED IN N.C.-P.

15. WHERE WASTE LINE DROPS OCCUR IN A LOCATION WHERE THE SOUND OF A FLUSHED TOILET MAY BE UNDESIRABLE, SUCH AS IN WALLS OR PARTITIONS ADJACENT TO EATING ROOMS, USE CAST IRON PIPING OR SIMILAR APPROVED HARD OR DENSE PIPING TO MITIGATE SOUND.

16. CLEANOUTS ON BUILDING SEWERS SHALL BE LOCATED AS SET FORTH IN N.C.-R.

17. THE MAXIMUM WATER CONSUMPTION FLOW RATES AND QUANTITIES FOR ALL PLUMBING FIXTURES SHALL BE IN ACCORDANCE WITH N.C.-R.

18. INDIVIDUAL SHOWER AND TUB/SHOWER COMBINATION VALVES SHALL BE EQUIPPED WITH CONTROL VALVES OF THE PRESSURE-BALANCE, THERMOSTATIC-MIXING OR COMBINATION PRESSURE-BALANCE/ THERMOSTATIC-MIXING VALVE TYPES WITH A HIGH LIMIT STOP IN ACCORDANCE WITH ASSE 1016/ ASME A112.1016/CSA B125.16. AND SHALL BE INSTALLED AND ADJUSTED PER MANUFACTURE'S INSTRUCTIONS.

19. GAS AND ELECTRIC WATER HEATERS HAVING AN IGNITION SOURCE SHALL BE ELEVATED SUCH THAT THE SOURCE OF IGNITION IS NOT LESS THAN 18 INCHES ABOVE THE GARAGE FLOOR. REFER TO N.C.-R FOR EXCEPTION.

20. WATER HEATERS, (USING SOLID, LIQUID OR GAS FUEL) WITH THE EXCEPTION OF THOSE HAVING DIRECT VENT SYSTEMS, SHALL NOT BE INSTALLED IN BATHROOMS AND BEDROOMS OR IN A CLOSET WITH ACCESS ONLY THROUGH A BEDROOM OR BATHROOM. HOWEVER, WATER HEATERS OF THE AUTOMATIC STORAGE TYPE MAY BE INSTALLED AS REPLACEMENT IN A BATHROOM, WHEN APPROVED BY THE PLUMBING OFFICIAL, PROVIDED THEY ARE VENTED AND SUPPLIED WITH ADEQUATE COMBUSTION AIR.

21. IN SEISMIC DESIGN CATEGORIES D0, D1 AND D2 AND TOWNHOUSES IN SEISMIC DESIGN CATEGORY C, WATER HEATERS SHALL BE ANCHORED OR STRAPPED IN THE UPPER ONE-THIRD AND IN THE LOWER ONE-THIRD OF THE APPLIANCE TO RESIST A HORIZONTAL FORCE EQUAL TO ONE-THIRD OF THE OPERATING WEIGHT OF THE WATER HEATER, ACTING IN ANY HORIZONTAL DIRECTION, OR IN ACCORDANCE WITH THE APPLIANCE MANUFACTURER'S RECOMMENDATIONS.

22. APPLIANCES LOCATED IN A GARAGE OR CARPORT SHALL BE PROTECTED FROM IMPACT BY A MOVING VEHICLE.

23. WHERE WATER HEATERS OR HOT WATER STORAGE TANKS ARE INSTALLED IN: REMOTE LOCATIONS SUCH AS SUSPENDED CEILING, ATTICS, ABOVE OCCUPIED SPACES, OR UNVENTILATED CRAWL SPACES, A LOCATION WHERE WATER LEAKAGE FROM THE TANK WILL CAUSE DAMAGE TO PRIMARY STRUCTURAL MEMBERS, THE TANK OR WATER HEATER SHALL BE INSTALLED IN A GALVANIZED STEEL PAN HAVING A MINIMUM THICKNESS OF 24 GAGE, OR OTHER PANS APPROVED FOR SUCH USE.

24. WHERE CLOTHES WASHING MACHINES ARE LOCATED ON WOOD FRAMED FLOORS WHERE LEAKAGE WOULD CAUSE DAMAGE, A GALVANIZED STEEL PAN HAVING A MINIMUM THICKNESS OF 24 GAGE, OR OTHER PANS APPROVED FOR SUCH USE SHALL BE PROVIDED.

MECHANICAL & PLUMBING (continued)

PLUMBING (continued)

25. APPLIANCES AND EQUIPMENT USED FOR HEATING WATER OR STORING HOT WATER SHALL BE PROTECTED BY A SEPARATE PRESSURE-RELIEF VALVE AND A SEPARATE TEMPERATURE- RELIEF VALVE OR A COMBINATION PRESSURE-AND-TEMPERATURE RELIEF VALVE. RELIEF VALVES SHALL HAVE A MINIMUM RATED CAPACITY FOR THE EQUIPMENT SERVED AND SHALL CONFORM TO ANSI Z21.22. THE RELIEF VALVE SHALL NOT BE USED AS A MEANS OF CONTROLLING THERMAL EXPANSION.

26. THE WATER SUPPLY TO A DISHWASHER SHALL BE PROTECTED AGAINST BACKFLOW BY AN AIR GAP COMPLYING WITH ASME A112.1.3 OR A112.1.2 THAT IS INSTALLED INTEGRALLY WITHIN THE MACHINE OR A BACKFLOW PREVENTER IN ACCORDANCE WITH THE NC-R.

27. SINK AND DISHWASHER. THE COMBINED DISCHARGE FROM A DISHWASHER AND A ONE- OR TWO-COMPARTMENT SINK, WITH OR WITHOUT A FOOD-WASTE DISPOSER, SHALL BE SERVED BY A TRAP OF NOT LESS THAN 11/2 INCHES (38 MM) IN OUTSIDE DIAMETER. THE DISHWASHER DISCHARGE PIPE OR TUBING SHALL RISE TO THE UNDERSIDE OF THE COUNTER AND SHALL BE SECURELY FASTENED TO THE UNDERSIDE OF THE SINK RIM OR COUNTER BEFORE CONNECTING TO THE HEAD OF THE FOOD-WASTE DISPOSER OR TO A WYE FITTING IN THE SINK TAILPIECE.

FIREPLACES

1. FACTORY-BUILT FIREPLACES SHALL BE LISTED AND LABELED AND SHALL BE INSTALLED IN ACCORDANCE WITH THE CONDITIONS OF THE LISTING. FACTORY-BUILT FIREPLACES SHALL BE TESTED IN ACCORDANCE WITH UL 127.

2. FIREPLACES ARE TO BE PROVIDED WITH AN EXTERIOR AIR SUPPLY

ELECTRICAL

1. ALL MATERIALS AND APPLIANCES, INSTALLATION AND CONSTRUCTION METHODS SHALL COMPLY WITH THE NATIONAL ELECTRICAL CODE OR CURRENT SAE REQUIREMENTS.

2. ALL ELECTRICAL SYSTEMS, CIRCUITS, FIXTURES AND EQUIPMENT SHALL BE GROUNDED IN A MANNER COMPLYING WITH ARTICLE 250 OF THE NATIONAL ELECTRICAL CODE.

3. ALL WIRING SHALL BE SO INSTALLED THAT, WHEN COMPLETED, THE SYSTEM WILL BE FREE FROM SHORT CIRCUITS AND FROM GROUNDS OTHER THAN AS REQUIRED OR PERMITTED IN N.E.C. ARTICLE 250.

4. ELECTRIC EQUIPMENT SHALL BE INSTALLED IN A NEAT AND WORK-MANLIKE MANNER.

5. ALL 125-VOLT, SINGLE-PHASE, 15- AND 20-AMPERE RECEPTACLES INSTALLED IN THE LOCATIONS SPECIFIED BELOW SHALL HAVE GROUND- FAULT CIRCUIT-INTERRUPTER PROTECTION FOR PERSONNEL. THE GROUND-FAULT CIRCUIT-INTERRUPTER SHALL BE INSTALLED IN A READILY ACCESSIBLE LOCATION.

   A. BATHROOMS.

   B. GARAGES AND ALSO ACCESSORY BUILDINGS THAT HAVE A FLOOR LOCATED AT OR BELOW GRADE LEVEL NOT INTENDED AS HABITABLE ROOMS AND LIMITED TO STORAGE AREAS, WORK AREAS, AND AREAS OF SIMILAR USE.

   C. OUTDOORS.

   D. CRAWL SPACES. WHERE THE CRAWL SPACE IS AT OR BELOW GRADE LEVEL.

   E. UNFINISHED PORTIONS OR AREAS OF THE BASEMENT NOT INTENDED AS HABITABLE ROOMS.

   F. KITCHENS. WHERE THE RECEPTACLES ARE INSTALLED TO SERVE THE COUNTERTOP SURFACES.

   G. SINKS. WHERE RECEPTACLES ARE INSTALLED WITHIN 6 FT FROM THE TOP INSIDE EDGE OF THE BOWL OF THE SINK.

   H. BOAT HOUSES.

   I. BATHTUBS OR SHOWER STALLS - WHERE RECEPTACLES ARE INSTALLED WITHIN 6' OF THE OUTSIDE EDGE OF THE BATHTUB OR SHOWER STALL.

   J. LAUNDRY AREAS

6. DISHWASHER - GFCI PROTECTION IS NOT REQUIRED FOR OUTLETS THAT SUPPLY DISHWASHERS INSTALLED IN DWELLING UNIT LOCATIONS.

7. CRAWL SPACE LIGHTING OUTLETS. GFCI PROTECTION SHALL BE PROVIDED FOR LIGHTING OUTLETS NOT EXCEEDING 120 VOLTS INSTALLED IN CRAWL SPACES.

7. APPLIANCE RECEPTACLE OUTLETS INSTALLED IN A DWELLING UNIT FOR SPECIFIC APPLIANCES, SUCH AS LAUNDRY EQUIPMENT, SHALL BE INSTALLED WITHIN 6 FEET OF THE INTENDED LOCATION OF THE APPLIANCE.

8. IN EVERY KITCHEN, FAMILY ROOM, DINING ROOM, LIVING ROOM, PARLOR, LIBRARY, DEN, SUNROOM, BEDROOM, RECREATION ROOM, OR SIMILAR ROOM OR AREA OF DWELLING UNITS, RECEPTACLE OUTLETS SHALL BE INSTALLED SO THAT NO POINT ALONG THE FLOOR LINE IN ANY WALL SPACE IS MORE THAN 6 FEET, MEASURED HORIZONTALLY, FROM AN OUTLET IN THAT SPACE, INCLUDING ANY WALL SPACE 2 FEET OR MORE IN WIDTH (INCLUDING SPACE MEASURED AROUND CORNERS) AND UNBROKEN ALONG THE FLOOR LINE BY DOORWAYS AND SIMILAR OPENINGS, FIREPLACES, AND FIXED CABINETS, AND THE WALL SPACE OCCUPIED BY FIXED PANELS IN EXTERIOR WALLS, BUT EXCLUDING SLIDING PANELS IN EXTERIOR WALLS. THE WALL SPACE AFFORDED BY FIXED ROOM DIVIDERS, SUCH AS FREESTANDING BAR-TYPE COUNTERS OR RAILINGS, SHALL BE INCLUDED IN THE 6 FOOT MEASUREMENT.

9. IN THE KITCHEN, PANTRY, BREAKFAST ROOM, DINING ROOM, OR SIMILAR AREA OF A DWELLING UNIT, THE TWO OR MORE 20-AMPERE SMALL-APPLIANCE BRANCH CIRCUITS REQUIRED SHALL SERVE ALL WALL AND FLOOR RECEPTACLE OUTLETS, ALL COUNTERTOP OUTLETS, AND RECEPTACLE OUTLETS FOR REFRIGERATION EQUIPMENT. THE TWO OR MORE SMALL-APPLIANCE BRANCH CIRCUITS SHALL HAVE NO OTHER OUTLETS.

10. IN KITCHENS, PANTRIES, BREAKFAST ROOMS, DINING ROOMS AND SIMILAR AREAS OF DWELLING UNITS, RECEPTACLE OUTLETS FOR COUNTER SPACES SHALL BE INSTALLED IN ACCORDANCE WITH THE FOLLOWING:

   (1) A RECEPTACLE OUTLET SHALL BE INSTALLED AT EACH WALL COUNTER SPACE 12 INCHES OR WIDER. RECEPTACLE OUTLETS SHALL BE INSTALLED SO THAT NO POINT ALONG THE WALL LINE IS MORE THAN 24 INCHES MEASURED HORIZONTALLY FROM A RECEPTACLE OUTLET IN THAT SPACE.

ELECTRICAL (continued)

   (2) AT LEAST ONE RECEPTACLE OUTLET SHALL BE INSTALLED AT EACH ISLAND COUNTER SPACE WITH A LONG DIMENSION OF 24 INCHES OR GREATER AND A SHORT DIMENSION OF 12 INCHES OR GREATER.

   (3) AT LEAST ONE RECEPTACLE OUTLET SHALL BE INSTALLED AT EACH PENINSULAR COUNTER SPACE WITH A LONG DIMENSION OF 24 INCHES OR GREATER AND A SHORT DIMENSION OF 12 INCHES OR GREATER. A PENINSULAR COUNTERTOP IS MEASURED FROM CONNECTING PERPENDICULAR WALL.

   (4) COUNTERTOP SPACES SEPARATED BY RANGE TOPS, REFRIGER-ATORS, OR SINKS SHALL BE CONSIDERED AS SEPARATE COUNTER-TOP SPACES IN APPLYING THE REQUIREMENTS OF (1), (2), AND (3) ABOVE. IF A RANGE, COUNTER-MOUNTED COOKING UNIT, OR SINK IS INSTALLED IN AN ISLAND OR PENINSULAR COUNTERTOP AND THE DEPTH OF THE COUNTER BEHIND THE ITEM IS LESS THEN 12 INCHES. IT WILL BE CONSIDERED TO DIVIDE THE COUNTERTOP SPACE INTO TWO SEPARATE COUNTERTOP SPACES. EACH COUNTERTOP SPACE SHALL COMPLY WITH APPLICABLE REQUIREMENTS.

   (5) RECEPTACLE OUTLETS SHALL BE LOCATED NOT MORE THAN 20 INCHES ABOVE THE COUNTERTOP. RECEPTACLE OUTLETS RENDERED NOT READILY ACCESSIBLE BY APPLIANCES FASTENED IN PLACE, APPLIANCE GARAGES, SINKS, OR RANGETOPS AS COVERED IN 4) ABOVE, OR APPLIANCES OCCUPYING DEDICATED SPACE SHALL NOT BE CONSIDERED AS THESE REQUIRED OUTLETS.

11. AT LEAST ONE WALL RECEPTACLE OUTLET SHALL BE INSTALLED IN BATHROOMS WITHIN 3 FEET OF THE OUTSIDE EDGE OF EACH BASIN. THE RECEPTACLE OUTLET SHALL BE LOCATED IN WALL OR PARTITION THAT IS ADJACENT TO THE BASIN OR BASIN COUNTERTOP, OR INSTALLED ON THE SIDE OR FACE OF THE BASIN CABINET NOT MORE THAN 12" BELOW THE COUNTERTOP.

12. IN DWELLING UNITS, AT LEAST ONE RECEPTACLE OUTLET SHALL BE INSTALLED IN AREAS DESIGNATED FOR THE INSTALLATION OF LAUNDRY EQUIPMENT.

13. IN EACH ATTACHED GARAGE AND IN EACH DETACHED GARAGE WITH ELECTRIC POWER, THE BRANCH CIRCUIT SUPPLYING THIS RECEPTACLE(S) SHALL NOT SUPPLY OUTLETS OUTSIDE OF THE GARAGE. AT LEAST ONE RECEPTACLE OUTLET SHALL BE INSTALLED IN EACH VEHICLE BAY.

14. CABLE- OR RACEWAY-TYPE WIRING METHODS INSTALLED IN A GROOVE, TO BE COVERED BY WALLBOARD, SIDING, PANELING, CARPETING, OR SIMILAR FINISH, SHALL BE PROTECTED BY 1/16 INCH THICK STEEL PLATE, SLEEVE, OR EQUIVALENT OR BY NOT LESS THAN 1-1/4 INCH FREE SPACE FOR THE FULL LENGTH OF THE GROOVE IN WHICH THE CABLE OR RACEWAY IS INSTALLED.

15. RECEPTACLES IN DAMP OR WET LOCATIONS.

   A. A RECEPTACLE INSTALLED OUTDOORS IN A LOCATION PROTECTED FROM WEATHER OR IN OTHER DAMP LOCATIONS SHALL HAVE AN ENCLOSURE FOR THE RECEPTACLE THAT IS WEATHERPROOF WHEN THE RECEPTACLE IS COVERED. (ATTACHMENT PLUG CAP NOT INSERTED AND RECEPTACLE COVERS CLOSED.)

   B. ALL 15- AND 20- AMPERE, 125- AND 250-VOLT RECEPTACLES INSTALLED IN A WET LOCATION SHALL HAVE AN ENCLOSURE THAT IS WEATHER PROOF WHETHER OR NOT THE ATTACHMENT PLUG CAP IS INSERTED. AN OUTLET BOX HOOD INSTALLED FOR THIS PURPOSE SHALL BE LISTED AND SHALL BE IDENTIFIED AS "EXTRA DUTY". ALL 15- AND 20- AMPERE, 125- AND 250-VOLT NONLOCKING RECEPTACLES SHALL BE LISTED WEATHER RESISTANT TYPE.

16. LIGHTING EQUIPMENT. NOT LESS THAN 75 PERCENT OF THE PERMANENTLY INSTALLED LIGHTING FIXTURES SHALL CONTAIN ONLY HIGH-EFFICACY LAMPS.

17. LIGHT FIXTURES WITHIN CLOTHES CLOSETS SHALL BE INSTALLED IN ACCORDANCE WITH N.E.C.

18. ALL 120-VOLT, SINGLE PHASE, 15- AND 20-AMPERE BRANCH CIRCUITS SUPPLYING OUTLETS OR DEVICES INSTALLED IN DWELLING UNIT FAMILY ROOMS, DINING ROOMS, LIVING ROOMS, PARLORS, LIBRARIES, DENS, BEDROOMS, SUNROOMS, RECREATION ROOMS, CLOSETS, HALLWAYS, OR SIMILAR ROOMS OR AREAS SHALL BE PROTECTED BY AN ARC-FAULT CIRCUIT INTERRUPTER(S), COMBINATION-TYPE, INSTALLED TO PROVIDE PROTECTION OF THE BRANCH CIRCUIT. THE ARC-FAULT CIRCUIT INTERRUPTER SHALL BE INSTALLED IN A READILY ACCESSIBLE LOCATION.

19. BUILDINGS SHALL BE PROVIDED WITH APPROVED ADDRESS IDENTIFICATION. THE ADDRESS IDENTIFICATION SHALL BE LEGIBLE AND PLACED IN A POSITION THAT IS VISIBLE FROM THE STREET OR ROAD FRONTING THE PROPERTY.

20. TAMPER-RESISTANT RECEPTACLES IN DWELLING UNITS IN ALL AREAS. ALL NON-LOCKING TYPE 125-VOLT 15-AND 20-AMPERE RECEPTACLES SHALL BE LISTED TAMPER-RESISTANT RECEPTACLES. EXCEPTIONS LISTED BELOW:

   1. RECEPTACLES LOCATED MORE THAN 5½' ABOVE THE FLOOR.

   2. RECEPTACLES THAT ARE PART OF A LUMINAIRE OR APPLIANCE.

   3. A SINGLE RECEPTACLE OR A DUPLEX RECEPTACLE FOR TWO APPLIANCES LOCATED WITHIN DEDICATED SPACE FOR EACH APPLIANCE THAT, IN NORMAL USE, IS NOT EASILY MOVED FROM ONE PLACE TO ANOTHER, AND THAT IS CORD-AND-PLUG CONNECTED.

   4. NON-GROUNDING RECEPTACLES USED FOR REPLACEMENTS.

21. DIMMER-CONTROLLED RECEPTACLES. A RECEPTACLE SUPPLYING LIGHTING LOADS SHALL NOT BE CONNECTED TO A DIMMER UNLESS THE PLUG/RECEPTACLE COMBINATION IS A NONSTANDARD CONFIGURATION TYPE THAT IS SPECIFICALLY LISTED AND IDENTIFIED FOR EACH SUCH UNIQUE COMBINATION..

SMOKE DETECTORS

1. SMOKE DETECTORS SHALL BE INSTALLED IN ACCORDANCE WITH THE APPROVED MANUFACTURER'S INSTRUCTIONS AND NC-R R314

2. ALL SMOKE ALARMS SHALL BE LISTED IN ACCORDANCE WITH UL 217 AND INSTALLED IN ACCORDANCE WITH THE PROVISIONS OF THIS CODE AND THE HOUSEHOLD FIRE WARNING EQUIPMENT PROVISIONS OF NFPA 72.

   HOUSEHOLD FIRE ALARM SYSTEMS INSTALLED IN ACCORDANCE WITH NFPA 72 THAT INCLUDE SMOKE ALARMS, OR A COMBINATION OF SMOKE DETECTOR AND AUDIBLE NOTIFICATION DEVICE INSTALLED AS REQUIRED BY THE NC-R R314.3 FOR SMOKE ALARMS, SHALL BE PERMITTED. THE HOUSEHOLD FIRE ALARM SYSTEM SHALL PROVIDE THE SAME LEVEL OF SMOKE DETECTION AND ALARM AS REQUIRED BY THE NC-R FOR SMOKE ALARMS IN THE EVENT THE FIRE ALARM PANEL IS REMOVED OR THE SYSTEM IS NOT CONNECTED TO A CENTRAL STATION.

3. REQUIRED SMOKE DETECTORS SHALL BE LOCATED IN ACCORDANCE WITH THE NC-R R314.3

ELECTRICAL (continued)

CARBON MONOXIDE ALARMS

1. CARBON MONOXIDE ALARMS IN DWELLING UNITS SHALL BE INSTALLED OUTSIDE OF EACH SEPARATE SLEEPING AREA IN THE IMMEDIATE VICINITY OF THE BEDROOMS. WHERE A FUEL-BURNING APPLIANCE IS LOCATED WITHIN A BEDROOM OR ITS ATTACHED BATHROOM, A CARBON MONOXIDE ALARM SHALL BE INSTALLED WITHIN THE BEDROOM.

2. SINGLE STATION CARBON MONOXIDE ALARMS SHALL BE LISTED AS COMPLYING WITH UL 2034 AND SHALL BE INSTALLED IN ACCORDANCE WITH THE NC-R R315 AND THE MANUFACTURER'S INSTALLATION INSTRUCTIONS.

3. COMBINATION CARBON MONOXIDE AND SMOKE ALARMS SHALL BE PERMITTED TO BE USED IN LIEU OF INDIVIDUAL CARBON MONOXIDE OR SMOKE ALARMS.

DRYER VENT

1. THE DRYER DUCT IS REQUIRED TO IDENTIFY THE LENGTH IN ACCORDANCE WITH SECTION M1502.4.5

2018 NC-R/2017 NEC

kb HOME

NORTH CAROLINA
50' SERIES

KB HOME
NORTH CAROLINA DIVISION

4518 S. MIAMI BLVD.
SUITE 180
DURHAM, NC 27703
TEL: (919) 768-7988
FAX: (919) 472-0582

2018 NORTH CAROLINA STATE BUILDING CODES

ISSUE DATE: 09/11/18
PROJECT No.: 1350999:57
DIVISION MGR.: MP
REVISIONS: 08/01/19

1 2018 CODE UPDATE NC19015NCP/ 03/15/19 / CTD
2 DIVISION REVISIONS NC19022NCP/ 03/15/19 / CTD
3 DIVISION REVISIONS NC19028NCP/ 04/22/19 / FAE
4 DIVISION REVISIONS NC19047NCP/ 08/01/19 / FAE
5 DIVISION REVISIONS NC20038NCP/ 10/29/20 / KBA

PLAN: 243.2939-R
SHEET: GN3

SPEC. LEVEL 1
RALEIGH-DURHAM
50' SERIES

These designs and drawings are CONFIDENTIAL and the exclusive property of KB Home Corporation, and are not to be disclosed without the express permission of KB Home Corporation. They may not be used or duplicated without the express permission of KB Home Corporation. Copyright 2014 © KB Home Corporation, all rights reserved.

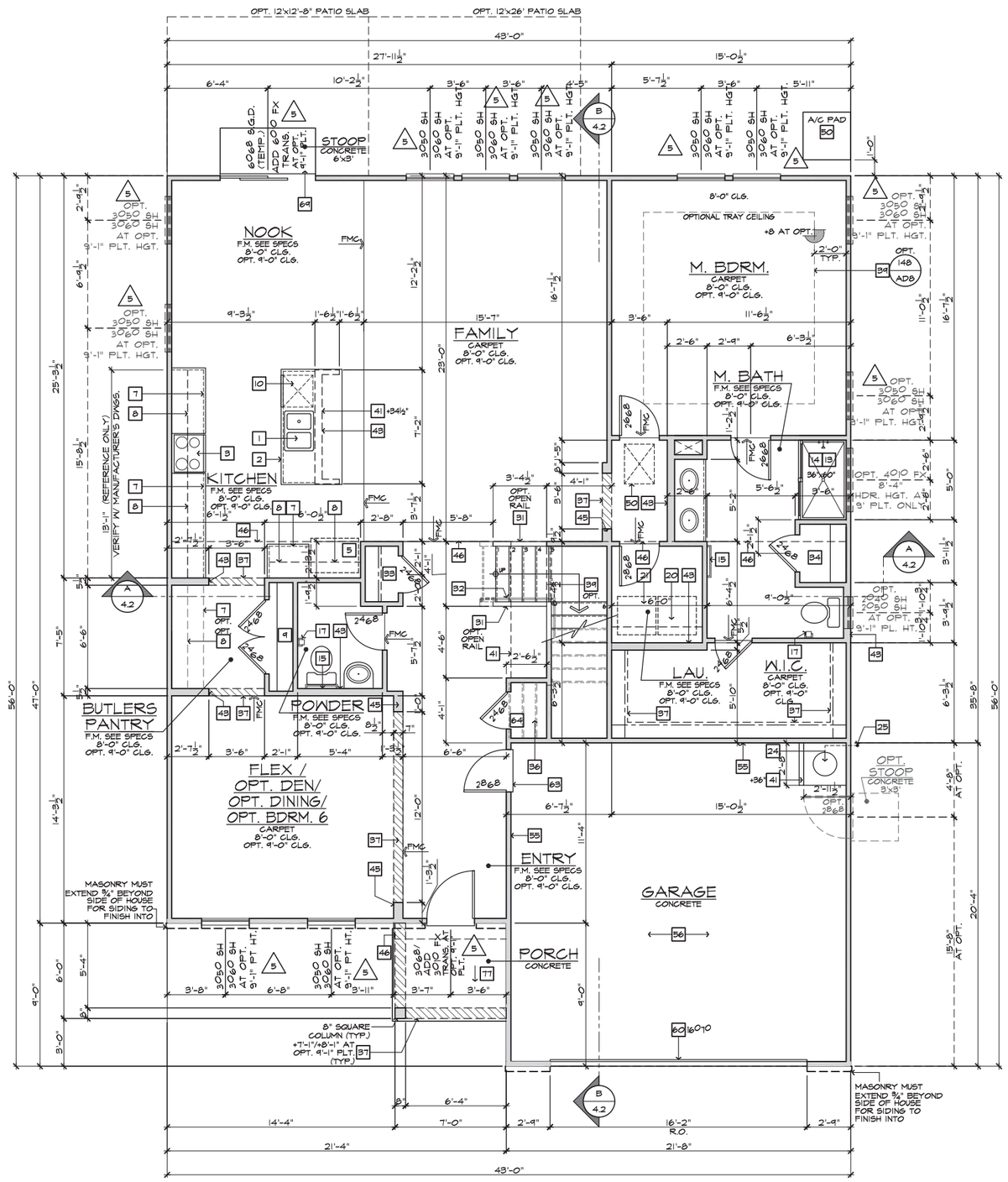

FIRST FLOOR PLAN 'A'

SCALE 1/4"=1'-0" (22"X34") - 1/8"=1'-0" (11"X17")

BASIC PLAN

INTERIOR KEY

SQUARE FOOTAGE		
PLAN 243.2939-R		
FIRST FLOOR AREA	1779	SQ. FT.
SECOND FLOOR AREA	1160	SQ. FT.
TOTAL AREA	2939	SQ. FT.
CRAWL GAR. AREA	437	SQ. FT.
PORCH AREA(S)		
ELEVATION 'A'	42	SQ. FT.
ELEVATION 'B'	71	SQ. FT.
ELEVATION 'C'	86	SQ. FT.
ELEVATION 'D'	128	SQ. FT.
DECK AREA(S)		
OPEN 12'x12'	144	SQ. FT.
OPEN 12'x26'	312	SQ. FT.
SCREENED-IN 12'x12'-8"	152	SQ. FT.
SCREENED-IN 12'x26'	312	SQ. FT.
SUNROOM AREA(S)		
12'X12'-8"	152	SQ. FT.

PLATE NOTES

2018 NC-R

8'-1" PLATE NOTES

WINDOW HEADER HEIGHT:	6'-8" U.N.O.
2nd FLOOR WINDOW HDR. HEIGHT:	7'-0" U.N.O.
ENTRY DOOR HEIGHT:	6'-8" U.N.O.
SLIDING GLASS DOOR HEIGHT:	6'-8" (TEMP.)
INTERIOR SOFFIT HEIGHT:	7'-4" U.N.O.
INTERIOR DOOR HEIGHT:	6'-8" U.N.O.

9'-1" PLATE NOTES

WINDOW HEADER HEIGHT:	7'-8" U.N.O.
2nd FLOOR WINDOW HDR. HEIGHT:	7'-8" U.N.O.
ENTRY DOOR HEIGHT:	6'-8" W/ 12" TRANSOM ABV.
SLIDING GLASS DOOR HEIGHT:	6'-8" W/ 12" TRANSOM ABV.
INTERIOR SOFFIT HEIGHT:	8'-0" U.N.O.
TRAY CEILING:	7¼" DROP U.N.O.
INTERIOR DOOR HEIGHT:	6'-8" U.N.O.

GENERAL PLAN NOTES

2018 NC-R

ALL CEILING HEIGHTS PER SECTION AND ELEVATION PLATE HEIGHTS, U.N.O.

ALL INTERIOR DOORS TO BE HOLLON CORE 1 3/8" THICK, U.N.O. (REFER TO PLAN FOR SIZE).

ALL GARAGE SERVICE DOORS TO BE HOLLOW CORE EXTERIOR GRADE (REFER TO PLAN FOR SIZE).

ALL HOUSE TO GARAGE DOORS TO BE 20-MINUTE FIRE-RATED (REFER TO PLAN FOR SIZE).

ALL ENTRY DOORS AND EXTERIOR FRENCH DOORS TO BE SOLID CORE 1 3/4" THICK (REFER TO PLAN FOR SIZE).

ALL FLOOR MATERIAL CHANGES TO OCCUR AT CENTER OF DOOR JAMBS, U.N.O.

STAIR DATA NOTES

2018 NC-R

FIRST FLOOR WITH 9'-1" PLATE HEIGHT:
16" DEEP T.J.I. FLOOR JOISTS WITH 3/4" T&G DECKING.
15 TREADS AT 10" EACH
16 RISERS AT 7-7/8" EACH

FIRST FLOOR WITH 10'-1" PLATE HEIGHT:
16" DEEP T.J.I. FLOOR JOISTS WITH 3/4" T&G DECKING.
16 TREADS AT 10" EACH
17 RISERS AT 8-1/8" EACH

FLOOR PLAN NOTES

1. SINK WITH GARBAGE DISPOSAL - VERIFY DIMENSIONS WITH MANUFACTURER SPEC'S.
2. DISHWASHER - PROVIDE SURFACE MOUNT AIR GAP VERIFY DIMENSIONS WITH MANUFACTURER SPEC'S.
3. SLIDE-IN RANGE/ OVEN COMBINATION W/ BUILT-IN LIGHT & FAN (VENT TO OUTSIDE AIR) - VERIFY WITH MANUFACTURER SPEC'S.
4. 36" COOKTOP - W/ BUILT-IN HOOD W/LIGHT & FAN. (VENT TO OUTSIDE AIR) - CABINET MOUNTED MICROWAVE INCLUDED OVEN WITH VENT - VERIFY WITH MANUFACTURER SPEC'S.
5. 39" CLEAR REFRIGERATOR SPACE - PROVIDE PLUMBING FOR ICEMAKER (RECESSED IN WALL).
6. DOUBLE OVEN - VERIFY WITH MANUFACTUER SPEC'S.
7. BASE CABINETS - REFER TO INTERIOR ELEVATIONS
8. UPPER CABINETS - REFER TO INTERIOR ELEVATIONS
9. PANTRY - SHELVES PER SPEC
10. ISLAND CABINET - REFER TO INTERIOR ELEVATIONS
11. TUB/SHOWER COMBINATION WITH 72" FIBERGLASS ENCLOSURE (NON-ABSORBENT) VERIFY DIMENSIONS WITH MFR'S SPEC'S.
12. OVAL TUB - VERIFY DIMENSIONS WITH MANUFACTURER SPEC'S.
13. SHOWER PAN WITH WAINSCOT TO 84" - VERIFY DIMENSIONS WITH MANUFACTURER SPEC'S.
14. SHATTERPROOF (TEMPERED) GLASS SHOWER ENCLOSURE
15. TOWEL BAR
16. NOT USED
17. TOILET PAPER HOLDER
18. EXTEND VANITY - REFER TO INTERIOR ELEVATIONS
19. OPTIONAL SINK
20. PROVIDE WATER AND WASTE FOR WASHER (WASHER CONTROL VALVES) (RECESSED IN WALL)
21. DRYER VENT
22. NOT USED
23. FREE STANDING LAUNDRY SINK - VERIFY DIMENSIONS WITH MFR'S SPEC'S.
24. ELECTRIC WATER HEATER - LOCATE ON 18" HIGH FRAMED PLATFORM
25. TEMPERATURE AND PRESSURE RELIEF VALVE DRAIN TO EXTERIOR - MIN. 6" ABOVE & MAX. 24" ABOVE GRADE
26. NOT USED
27. NOT USED
28. PRE-MFR. METAL GAS APPLIANCE FIREPLACE INSTALLED PER MANUFACTURERS INSTRUCTIONS
29. NON-COMBUSTIBLE HEARTH MATERIAL
30. ROUTE OF FIREPLACE "B" VENT FROM BELOW - PROVIDE O.S.B. SHAFT
31. +36" GUARD WALL DETAIL 84/AD5 OR 86/AD5
32. +34" - +38" HIGH HANDRAIL DETAIL 83/AD5
33. COATS WITH SHELF & POLE - DETAIL 73/AD4
34. LINEN - SHELVES PER SPEC
35. WARDROBE WITH SHELF & POLE - DETAIL 73/AD4 U.N.O.
36. MEDIA NICHE - REFER TO INTERIOR ELEVATIONS
37. FLAT SOFFIT - REFER TO PLAN OR ELEVATIONS FOR HEIGHT
38. NOT USED
39. LINE OF CEILING BREAK
40. INTERIOR SHELF - REFER TO PLAN OR INT. ELEVS. FOR HGT.
41. LOW WALL - REFER TO PLAN FOR HEIGHT - DETAIL 72/AD4
42. LOCATION OF PLUMBING WASTE DROP FROM ABOVE
43. 2x6 WALL
44. 2x6 BALLOON FRAMED WALL - REFER TO STRUCTURAL
45. DOUBLE 2x4 WALL
46. LINE OF FLOOR ABOVE
47. LINE OF FLOOR BELOW
48. EXTERIOR RAIL
49. F.A.U. VENT TO OUTSIDE AIR
50. 22"x54" ATTIC ACCESS W/ STAIRS
51. F.A.U. IN ATTIC - PROVIDE MIN. 22"x30" ATTIC ACCESS PANEL - PROVIDE FUEL GAS. REFER TO UTILITY PLAN DETAIL 88/AD5
52. DUCT CHASE - DETAIL 84 & 90/AD5 - REFER TO MECH. PLAN
53. RETURN AIR GRILL (R.A.G.) - REFER TO MECHANICAL PLAN
54. 1/2" GYPSUM BOARD ON CEILING AND WALLS AT USEABLE SPACE UNDER STAIRS
55. THE GARAGE SHALL BE SEPARATED FROM THE RESIDENCE AND ITS ATTIC AREA BY NOT LESS THAN ½" GYPSUM BOARD APPLIED TO THE GARAGE SIDE
56. SEPARATION BETWEEN SECOND FLOOR AND GARAGE CEILING: PROVIDE (1) LAYER OF ⅝" TYPE "X" GYPSUM BOARD. WALLS SUPPORTING SECOND FLOOR AND GARAGE CEILING: PROVIDE (1) LAYER OF ½" GYPSUM BOARD
57. EXTERIOR SHELF - REFER TO ELEV. FOR HEIGHT
58. NOT USED
59. NOT USED
60. SECTIONAL GARAGE DOOR - VERIFY WINDOW OPTION
61. NOT USED
62. DRAFTSTOP REQUIRED IN FLOOR / CEILING SPACES EXCEEDING 1000 SQUARE FEET. DIVIDED SPACES MUST BE ROUGHLY EQUAL.
63. OPENINGS BETWEEN GARAGE AND HOUSE SHALL BE EQUIPPED WITH SOLID WOOD DOORS NOT LESS THAN 1 3/8-INCH THICK, OR SHALL BE 20-MINUTE FIRE RATED. DOORS SHALL BE WEATHERSTRIPPED

NOTE:
FOR ALL PLAN OPTIONS REFER TO BASIC PLAN FOR INFORMATION NOT SHOWN HERE.

kb HOME

NORTH CAROLINA
50' SERIES

KB HOME
NORTH CAROLINA DIVISION

4518 S. MIAMI BLVD.
SUITE 180
DURHAM, NC 27703
TEL: (919) 768-7988
FAX: (919) 472-0582

2018 NORTH CAROLINA STATE BUILDING CODES

ISSUE DATE:	09/11/18
PROJECT No.:	1350999:57
DIVISION MGR.:	MP
REVISIONS:	08/01/19

1. 2018 CODE UPDATE NC19015NCP/ 03/15/19 / CTD
2. DIVISION REVISIONS NC19022NCP/ 03/15/19 / CTD
3. DIVISION REVISIONS NC19028NCP/ 04/22/19 / FAE
4. DIVISION REVISIONS NC19047NCP/ 08/01/19 / FAE
5. DIVISION REVISIONS NC20038NCP/ 10/29/20 / KBA

PLAN: 243.2939-R

SHEET: 1.1

SPEC. LEVEL 1

RALEIGH-DURHAM
50' SERIES

These designs and drawings are CONFIDENTIAL, and the exclusive property of KB Home Corporation. They may not be used or duplicated without the express permission of KB Home Corporation. Copyright 2014 © KB Home Corporation, all rights reserved.

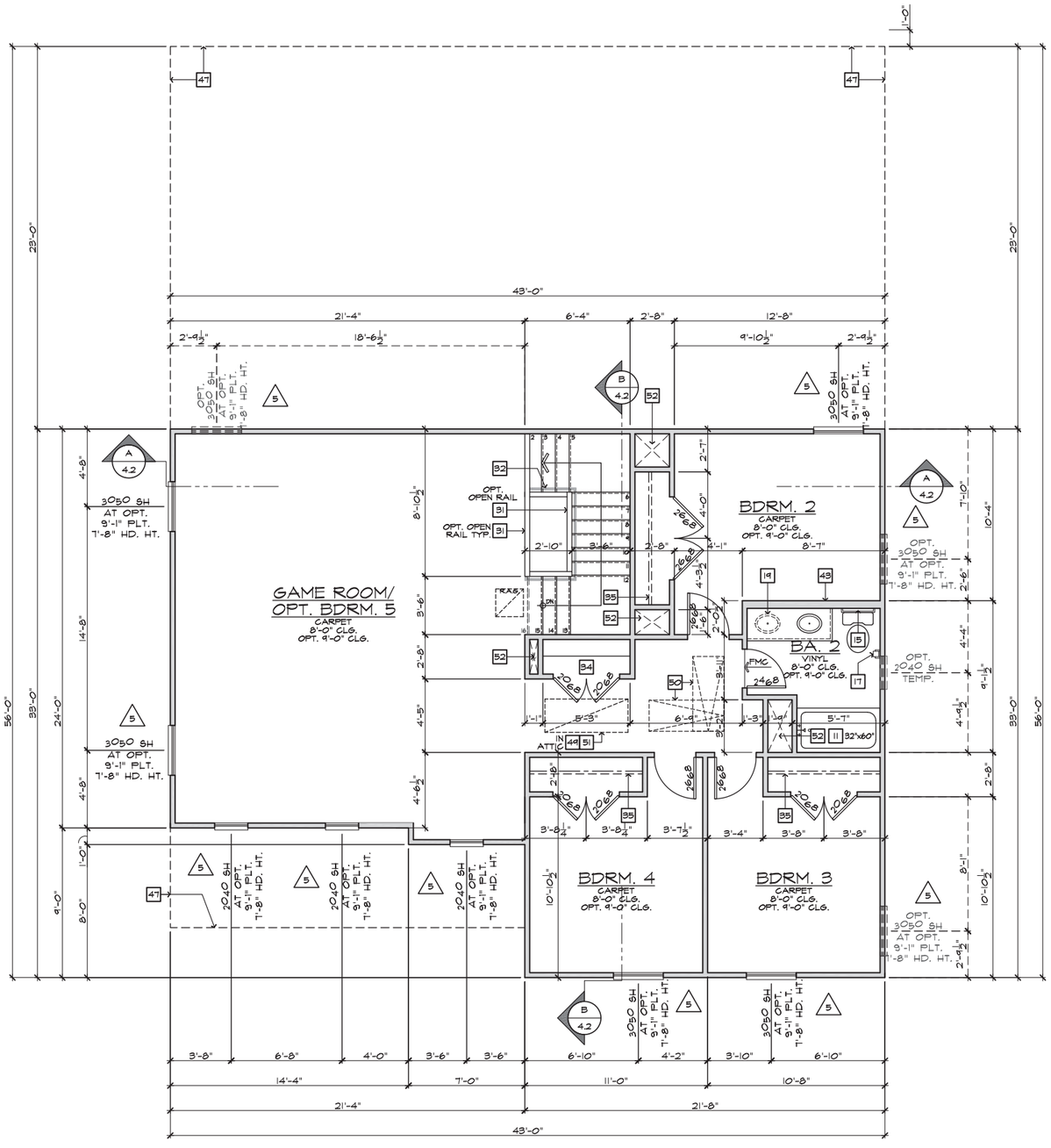

SECOND FLOOR PLAN 'A'

SCALE 1/4"=1'-0" (22"X34") - 1/8"=1'-0" (11"X17")

BASIC PLAN

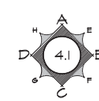

INTERIOR KEY

PLATE NOTES

2018 NC-R

8'-1" PLATE NOTES	
WINDOW HEADER HEIGHT:	6'-8" U.N.O.
2nd FLOOR WINDOW HDR. HEIGHT:	7'-0" U.N.O.
ENTRY DOOR HEIGHT:	6'-8" U.N.O.
SLIDING GLASS DOOR HEIGHT:	6'-8" (TEMP.)
INTERIOR SOFFIT HEIGHT:	7'-4" U.N.O.
INTERIOR DOOR HEIGHT:	6'-8" U.N.O.

9'-1" PLATE NOTES	
WINDOW HEADER HEIGHT:	7'-8" U.N.O.
2nd FLOOR WINDOW HDR. HEIGHT:	7'-8" U.N.O.
ENTRY DOOR HEIGHT:	6'-8" W/ 12" TRANSOM ABV.
SLIDING GLASS DOOR HEIGHT:	6'-8" W/ 12" TRANSOM ABV.
INTERIOR SOFFIT HEIGHT:	8'-0" U.N.O.
TRAY CEILING:	7¼" DROP U.N.O.
INTERIOR DOOR HEIGHT:	6'-8" U.N.O.

GENERAL PLAN NOTES

2018 NC-R

ALL CEILING HEIGHTS PER SECTION AND ELEVATION PLATE HEIGHTS, U.N.O.

ALL INTERIOR DOORS TO BE HOLLOW CORE 1 3/8" THICK, U.N.O. (REFER TO PLAN FOR SIZE).

ALL GARAGE SERVICE DOORS TO BE HOLLOW CORE EXTERIOR GRADE (REFER TO PLAN FOR SIZE).

ALL HOUSE TO GARAGE DOORS TO BE 20-MINUTE FIRE-RATED (REFER TO PLAN FOR SIZE).

ALL ENTRY DOORS AND EXTERIOR FRENCH DOORS TO BE SOLID CORE 1 3/4" THICK (REFER TO PLAN FOR SIZE).

ALL FLOOR MATERIAL CHANGES TO OCCUR AT CENTER OF DOOR JAMBS, U.N.O.

STAIR DATA NOTES

2018 NC-R

FIRST FLOOR WITH 9'-1" PLATE HEIGHT:
16" DEEP T.J.I. FLOOR JOISTS WITH 3/4" T&G DECKING.
15 TREADS AT 10" EACH
16 RISERS AT 7-1/8" EACH

FIRST FLOOR WITH 10'-1" PLATE HEIGHT:
16" DEEP T.J.I. FLOOR JOISTS WITH 3/4" T&G DECKING.
16 TREADS AT 10" EACH
17 RISERS AT 8-1/8" EACH

FLOOR PLAN NOTES

1. SINK WITH GARBAGE DISPOSAL - VERIFY DIMENSIONS WITH MANUFACTURER SPEC'S.
2. DISHWASHER - PROVIDE SURFACE MOUNT AIR GAP VERIFY DIMENSIONS WITH MANUFACTURER SPEC'S.
3. SLIDE-IN RANGE/ OVEN COMBINATION W/ BUILT-IN LIGHT & FAN (VENT TO OUTSIDE AIR) - VERIFY WITH MANUFACTURER SPEC'S.
4. 36" COOKTOP - W/ BUILT-IN HOOD W/LIGHT & FAN. (VENT TO OUTSIDE AIR) - CABINET MOUNTED MICROWAVE INCLUDED OVEN WITH VENT - VERIFY WITH MANUFACTURER SPEC'S.
5. 34" CLEAR REFRIGERATOR SPACE - PROVIDE PLUMBING FOR ICEMAKER (RECESSED IN WALL).
6. DOUBLE OVEN - VERIFY WITH MANUFACTUER SPEC'S.
7. BASE CABINETS - REFER TO INTERIOR ELEVATIONS
8. UPPER CABINETS - REFER TO INTERIOR ELEVATIONS
9. PANTRY - SHELVES PER SPEC
10. ISLAND CABINET - REFER TO INTERIOR ELEVATIONS
11. TUB/SHOWER COMBINATION WITH 72" FIBERGLASS ENCLOSURE (NON-ABSORBENT) VERIFY DIMENSIONS WITH MFR'S SPEC'S.
12. OVAL TUB - VERIFY DIMENSIONS WITH MANUFACTURER SPEC'S.
13. SHOWER PAN WITH WAINSCOT TO 84" - VERIFY DIMENSIONS WITH MANUFACTURER SPEC'S.
14. SHATTERPROOF (TEMPERED) GLASS SHOWER ENCLOSURE
15. TOWEL BAR
16. NOT USED
17. TOILET PAPER HOLDER
18. EXTEND VANITY - REFER TO INTERIOR ELEVATIONS
19. OPTIONAL SINK
20. PROVIDE WATER AND WASTE FOR WASHER (WASHER CONTROL VALVES) (RECESSED IN WALL)
21. DRYER VENT
22. NOT USED
23. FREE STANDING LAUNDRY SINK - VERIFY DIMENSIONS WITH MFR'S SPEC'S.
24. ELECTRIC WATER HEATER - LOCATE ON 18" HIGH FRAMED PLATFORM
25. TEMPERATURE AND PRESSURE RELIEF VALVE DRAIN TO EXTERIOR - MIN. 6" ABOVE & MAX. 24" ABOVE GRADE
26. NOT USED
27. NOT USED
28. PRE-MFR. METAL GAS APPLIANCE FIREPLACE INSTALLED PER MANUFACTURERS INSTRUCTIONS
29. NON-COMBUSTIBLE HEARTH MATERIAL
30. ROUTE OF FIREPLACE "B" VENT FROM BELOW - PROVIDE O.S.B. SHAFT
31. +36" GUARD WALL DETAIL 84/AD5 OR 86/AD5
32. +34" - +38" HIGH HANDRAIL DETAIL 88/AD5
33. COATS WITH SHELF & POLE - DETAIL 73/AD4
34. LINEN - SHELVES PER SPEC
35. WARDROBE WITH SHELF & POLE - DETAIL 73/AD4 U.N.O.
36. MEDIA NICHE - REFER TO INTERIOR ELEVATIONS
37. FLAT SOFFIT - REFER TO PLAN OR ELEVATIONS FOR HEIGHT
38. NOT USED
39. LINE OF CEILING BREAK
40. INTERIOR SHELF - REFER TO PLAN OR INT. ELEVS. FOR HST.
41. LOW WALL - REFER TO PLAN FOR HEIGHT - DETAIL 72/AD4
42. LOCATION OF PLUMBING WASTE DROP FROM ABOVE
43. 2x6 WALL
44. 2x6 BALLOON FRAMED WALL - REFER TO STRUCTURAL
45. DOUBLE 2x4 WALL
46. LINE OF FLOOR ABOVE
47. LINE OF FLOOR BELOW
48. EXTERIOR RAIL
49. F.A.U. VENT TO OUTSIDE AIR
50. 22"x54" ATTIC ACCESS W/ STAIRS
51. F.A.U. IN ATTIC - PROVIDE MIN. 22"x30" ATTIC ACCESS PANEL - PROVIDE FUEL GAS. REFER TO UTILITY PLAN DETAIL 88/AD5
52. DUCT CHASE - DETAIL 89 & 90/AD5 - REFER TO MECH. PLAN
53. RETURN AIR GRILL (R.A.G.) - REFER TO MECHANICAL PLAN
54. 1/2" GYPSUM BOARD ON CEILINGS AND WALLS AT USEABLE SPACE UNDER STAIRS
55. THE GARAGE SHALL BE SEPARATED FROM THE RESIDENCE AND ITS ATTIC AREA BY NOT LESS THAN ½" GYPSUM BOARD APPLIED TO THE GARAGE SIDE
56. SEPARATION BETWEEN SECOND FLOOR AND GARAGE CEILING: PROVIDE (1) LAYER OF ⅝" TYPE "X" GYPSUM BOARD. WALLS SUPPORTING SECOND FLOOR AND GARAGE CEILING: PROVIDE (1) LAYER OF ½" GYPSUM BOARD
57. EXTERIOR SHELF - REFER TO ELEV. FOR HEIGHT
58. NOT USED
59. NOT USED
60. SECTIONAL GARAGE DOOR - VERIFY WINDOW OPTION
61. NOT USED
62. DRAFTSTOP REQUIRED IN FLOOR / CEILING SPACES EXCEEDING 1000 SQUARE FEET. DIVIDED SPACES MUST BE ROUGHLY EQUAL.
63. OPENINGS BETWEEN GARAGE AND HOUSE SHALL BE EQUIPPED WITH SOLID WOOD DOORS NOT LESS THAN 1 3/8-INCH THICK, OR SHALL BE 20-MINUTE FIRE RATED. DOORS SHALL BE WEATHERSTRIPPED

NOTE:
FOR ALL PLAN OPTIONS REFER TO BASIC PLAN FOR INFORMATION NOT SHOWN HERE.

kb HOME

NORTH CAROLINA
50' SERIES

KB HOME
NORTH CAROLINA DIVISION

4518 S. MIAMI BLVD.
SUITE 180
DURHAM, NC 27703
TEL: (919) 768-7988
FAX: (919) 472-0582

2018 NORTH CAROLINA STATE BUILDING CODES

ISSUE DATE: 09/11/18
PROJECT No.: 1350999:57
DIVISION MGR.: MP
REVISIONS: 08/01/19

1 2018 CODE UPDATE NC19015NCP/ 03/15/19 / CTD
2 DIVISION REVISIONS NC19022NCP/ 03/15/19 / CTD
3 DIVISION REVISIONS NC19028NCP/ 04/22/19 / FAE
4 DIVISION REVISIONS NC19047NCP/ 08/01/19 / FAE
5 DIVISION REVISIONS NC20038NCP/ 10/29/20 / KBA

PLAN: 243.2939-R
SHEET: 1.2

SPEC. LEVEL 1

RALEIGH-DURHAM
50' SERIES

These designs and drawings are CONFIDENTIAL, and the exclusive property of KB Home Corporation and are not to be disclosed without the express permission of KB Home Corporation. They may not be used or duplicated without the express permission of KB Home Corporation. Copyright 2014 © KB Home Corporation, all rights reserved.

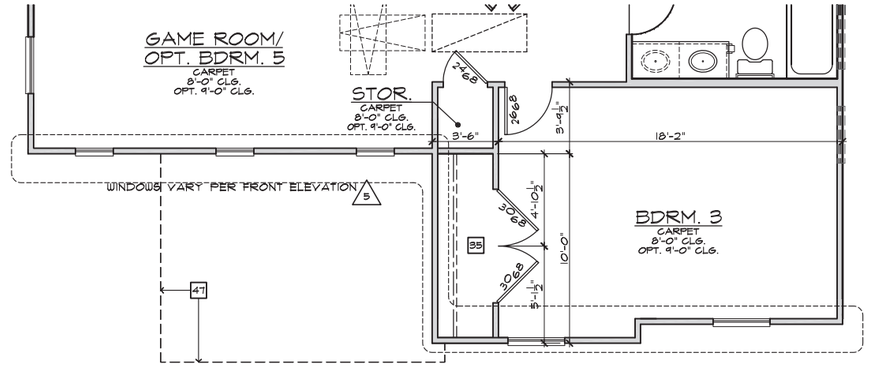

ENLARGED BEDROOM 2 & 3 - ('C' 'D' SIM.)

SCALE 1/4"=1'-0" (22"x34") - 1/8"=1'-0" (11"x17")

2

#	FLOOR PLAN NOTES
1.	SINK WITH GARBAGE DISPOSAL - VERIFY DIMENSIONS WITH MANUFACTURER SPEC'S.
2.	DISHWASHER - PROVIDE SURFACE MOUNT AIR GAP VERIFY DIMENSIONS WITH MANUFACTURER SPEC'S.
3.	SLIDE-IN RANGE/ OVEN COMBINATION W/ BUILT-IN LIGHT & FAN (VENT TO OUTSIDE AIR) - VERIFY WITH MANUFACTURER SPEC'S.
4.	36" COOKTOP - W/ BUILT-IN HOOD W/LIGHT & FAN. (VENT TO OUTSIDE AIR) - CABINET MOUNTED MICROWAVE INCLUDED OVEN WITH VENT - VERIFY WITH MANUFACTURER SPEC'S.
5.	34" CLEAR REFRIGERATOR SPACE - PROVIDE PLUMBING FOR ICEMAKER (RECESSED IN WALL).
6.	DOUBLE OVEN - VERIFY WITH MANUFACTUER SPEC'S.
7.	BASE CABINETS - REFER TO INTERIOR ELEVATIONS
8.	UPPER CABINETS - REFER TO INTERIOR ELEVATIONS
9.	PANTRY - SHELVES PER SPEC
10.	ISLAND CABINET - REFER TO INTERIOR ELEVATIONS
11.	TUB/SHOWER COMBINATION WITH 72" FIBERGLASS ENCLOSURE (NON-ABSORBENT) VERIFY DIMENSIONS WITH MFR'S SPEC'S.
12.	OVAL TUB - VERIFY DIMENSIONS WITH MANUFACTURER SPEC'S.
13.	SHOWER PAN WITH WAINSCOT TO 84" - VERIFY DIMENSIONS WITH MANUFACTURER SPEC'S.
14.	SHATTERPROOF (TEMPERED) GLASS SHOWER ENCLOSURE
15.	TOWEL BAR
16.	NOT USED
17.	TOILET PAPER HOLDER
18.	EXTEND VANITY - REFER TO INTERIOR ELEVATIONS
19.	OPTIONAL SINK
20.	PROVIDE WATER AND WASTE FOR WASHER (WASHER CONTROL VALVES) (RECESSED IN WALL)
21.	DRYER VENT
22.	NOT USED
23.	FREE STANDING LAUNDRY SINK - VERIFY DIMENSIONS WITH MFR'S SPEC'S.
24.	ELECTRIC WATER HEATER - LOCATE ON 18" HIGH FRAMED PLATFORM
25.	TEMPERATURE AND PRESSURE RELIEF VALVE DRAIN TO EXTERIOR - MIN. 6" ABOVE & MAX. 24" ABOVE GRADE
26.	NOT USED
27.	NOT USED
28.	PRE-MFR. METAL GAS APPLIANCE FIREPLACE INSTALLED PER MANUFACTURERS INSTRUCTIONS
29.	NON-COMBUSTIBLE HEARTH MATERIAL
30.	ROUTE OF FIREPLACE "B" VENT FROM BELOW - PROVIDE O.S.B. SHAFT
31.	+36" GUARD WALL DETAIL 84/AD5 OR 86/AD5
32.	+34" - +38" HIGH HANDRAIL DETAIL 83/AD5
33.	COATS WITH SHELF & POLE - DETAIL 73/AD4
34.	LINEN - SHELVES PER SPEC
35.	WARDROBE WITH SHELF & POLE - DETAIL 73/AD4 U.N.O.
36.	MEDIA NICHE - REFER TO INTERIOR ELEVATIONS
37.	FLAT SOFFIT - REFER TO PLAN OR ELEVATIONS FOR HEIGHT
38.	NOT USED
39.	LINE OF CEILING BREAK
40.	INTERIOR SHELF - REFER TO PLAN OR INT. ELEVS. FOR HGT.
41.	LOW WALL - REFER TO PLAN FOR HEIGHT - DETAIL 72/AD4
42.	LOCATION OF PLUMBING WASTE DROP FROM ABOVE
43.	2x6 WALL
44.	2x6 BALLOON FRAMED WALL - REFER TO STRUCTURAL
45.	DOUBLE 2x4 WALL
46.	LINE OF FLOOR ABOVE
47.	LINE OF FLOOR BELOW
48.	EXTERIOR RAIL
49.	F.A.U. VENT TO OUTSIDE AIR
50.	22"x54" ATTIC ACCESS W/ STAIRS
51.	F.A.U. IN ATTIC - PROVIDE MIN. 22"x30" ATTIC ACCESS PANEL - PROVIDE FUEL GAS. REFER TO UTILITY PLAN DETAIL 88/AD5
52.	DUCT CHASE - DETAIL 89 & 90/AD5 - REFER TO MECH. PLAN
53.	RETURN AIR GRILL (R.A.G.) - REFER TO MECHANICAL PLAN
54.	1/2" GYPSUM BOARD ON CEILING AND WALLS AT USEABLE SPACE UNDER STAIRS
55.	THE GARAGE SHALL BE SEPARATED FROM THE RESIDENCE AND ITS ATTIC AREA BY NOT LESS THAN ½" GYPSUM BOARD APPLIED TO THE GARAGE SIDE
56.	SEPARATION BETWEEN SECOND FLOOR AND GARAGE CEILING: PROVIDE (1) LAYER OF ⅝" TYPE "X" GYPSUM BOARD. WALLS SUPPORTING SECOND FLOOR AND GARAGE CEILING: PROVIDE (1) LAYER OF ½" GYPSUM BOARD
57.	EXTERIOR SHELF - REFER TO ELEV. FOR HEIGHT
58.	NOT USED
59.	NOT USED
60.	SECTIONAL GARAGE DOOR - VERIFY WINDOW OPTION
61.	NOT USED
62.	DRAFTSTOP REQUIRED IN FLOOR / CEILING SPACES EXCEEDING 1000 SQUARE FEET. DIVIDED SPACES MUST BE ROUGHLY EQUAL.
63.	OPENINGS BETWEEN GARAGE AND HOUSE SHALL BE EQUIPPED WITH SOLID WOOD DOORS NOT LESS THAN 1 3/8-INCH THICK, OR SHALL BE 20-MINUTE FIRE RATED. DOORS SHALL BE WEATHERSTRIPPED

NOTE:
FOR ALL PLAN OPTIONS REFER TO BASIC PLAN FOR INFORMATION NOT SHOWN HERE.

kb HOME

NORTH CAROLINA
50' SERIES

KB HOME
NORTH CAROLINA DIVISION

4518 S. MIAMI BLVD.
SUITE 180
DURHAM, NC 27703
TEL: (919) 768-7988
FAX: (919) 472-0582

2018 NORTH CAROLINA STATE BUILDING CODES

ISSUE DATE: 09/11/18
PROJECT No.: 1350999:57
DIVISION MGR.: MP
REVISIONS: 08/01/19

1 2018 CODE UPDATE NC19015NCP/ 03/15/19 / CTD

2 DIVISION REVISIONS NC19022NCP/ 03/15/19 / CTD

3 DIVISION REVISIONS NC19028NCP/ 04/22/19 / FAE

4 DIVISION REVISIONS NC19047NCP/ 08/01/19 / FAE

5 DIVISION REVISIONS NC20038NCP/ 10/29/20 / KBA

PLAN: 243.2939-R

SHEET: 1.4

SPEC. LEVEL 1

RALEIGH-DURHAM
50' SERIES

These designs and drawings are CONFIDENTIAL, and the exclusive property of KB Home Corporation and are not to be disclosed without the express permission of KB Home Corporation. They may not be used or duplicated without the express permission of KB Home Corporation. Copyright 2014 © KB Home Corporation, all rights reserved.

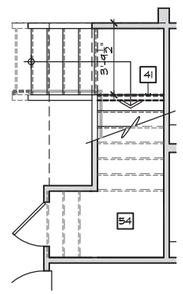

STORAGE

AT STAIRS

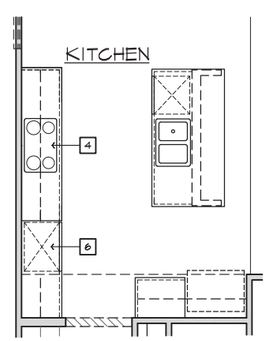

ISLAND

AT KITCHEN

FIRST FLOOR PLAN OPTIONS

SCALE 1/4"=1'-0" (22"X34") - 1/8"=1'-0" (11"X17")

FLOOR PLAN NOTES

#	
1.	SINK WITH GARBAGE DISPOSAL - VERIFY DIMENSIONS WITH MANUFACTURER SPEC'S.
2.	DISHWASHER - PROVIDE SURFACE MOUNT AIR GAP VERIFY DIMENSIONS WITH MANUFACTURER SPEC'S.
3.	SLIDE-IN RANGE/ OVEN COMBINATION W/ BUILT-IN LIGHT & FAN (VENT TO OUTSIDE AIR) - VERIFY WITH MANUFACTURER SPEC'S.
4.	36" COOKTOP - W/ BUILT-IN HOOD W/LIGHT & FAN. (VENT TO OUTSIDE AIR) - CABINET MOUNTED MICROWAVE INCLUDED OVEN WITH VENT - VERIFY WITH MANUFACTURER SPEC'S.
5.	34" CLEAR REFRIGERATOR SPACE - PROVIDE PLUMBING FOR ICEMAKER (RECESSED IN WALL).
6.	DOUBLE OVEN - VERIFY WITH MANUFACTUER SPEC'S.
7.	BASE CABINETS - REFER TO INTERIOR ELEVATIONS
8.	UPPER CABINETS - REFER TO INTERIOR ELEVATIONS
9.	PANTRY - SHELVES PER SPEC
10.	ISLAND CABINET - REFER TO INTERIOR ELEVATIONS
11.	TUB/SHOWER COMBINATION WITH 72" FIBERGLASS ENCLOSURE (NON-ABSORBENT) VERIFY DIMENSIONS WITH MFR'S SPEC'S.
12.	OVAL TUB - VERIFY DIMENSIONS WITH MANUFACTURER SPEC'S.
13.	SHOWER PAN WITH WAINSCOT TO 84" - VERIFY DIMENSIONS WITH MANUFACTURER SPEC'S.
14.	SHATTERPROOF (TEMPERED) GLASS SHOWER ENCLOSURE
15.	TOWEL BAR
16.	NOT USED
17.	TOILET PAPER HOLDER
18.	EXTEND VANITY - REFER TO INTERIOR ELEVATIONS
19.	OPTIONAL SINK
20.	PROVIDE WATER AND WASTE FOR WASHER (WASHER CONTROL VALVES) (RECESSED IN WALL)
21.	DRYER VENT
22.	NOT USED
23.	FREE STANDING LAUNDRY SINK - VERIFY DIMENSIONS WITH MFR'S SPEC'S.
24.	ELECTRIC WATER HEATER - LOCATE ON 18" HIGH FRAMED PLATFORM
25.	TEMPERATURE AND PRESSURE RELIEF VALVE DRAIN TO EXTERIOR - MIN. 6" ABOVE & MAX. 24" ABOVE GRADE
26.	NOT USED
27.	NOT USED
28.	PRE-MFR. METAL GAS APPLIANCE FIREPLACE INSTALLED PER MANUFACTURERS INSTRUCTIONS
29.	NON-COMBUSTIBLE HEARTH MATERIAL
30.	ROUTE OF FIREPLACE "B" VENT FROM BELOW - PROVIDE O.S.B. SHAFT
31.	+36" GUARD WALL DETAIL 84/AD5 OR 86/AD5
32.	+34" - +38" HIGH HANDRAIL DETAIL 83/AD5
33.	COATS WITH SHELF & POLE - DETAIL 73/AD4
34.	LINEN - SHELVES PER SPEC
35.	WARDROBE WITH SHELF & POLE - DETAIL 73/AD4 U.N.O.
36.	MEDIA NICHE - REFER TO INTERIOR ELEVATIONS
37.	FLAT SOFFIT - REFER TO PLAN OR ELEVATIONS FOR HEIGHT
38.	NOT USED
39.	LINE OF CEILING BREAK
40.	INTERIOR SHELF - REFER TO PLAN OR INT. ELEVS. FOR HGT.
41.	LOW WALL - REFER TO PLAN FOR HEIGHT - DETAIL 72/AD4
42.	LOCATION OF PLUMBING WASTE DROP FROM ABOVE
43.	2x6 WALL
44.	2x6 BALLOON FRAMED WALL - REFER TO STRUCTURAL
45.	DOUBLE 2x4 WALL
46.	LINE OF FLOOR ABOVE
47.	LINE OF FLOOR BELOW
48.	EXTERIOR RAIL
49.	F.A.U. VENT TO OUTSIDE AIR
50.	22"x54" ATTIC ACCESS W/ STAIRS
51.	F.A.U. IN ATTIC - PROVIDE MIN. 22"x30" ATTIC ACCESS PANEL - PROVIDE FUEL GAS. REFER TO UTILITY PLAN DETAIL 88/AD5
52.	DUCT CHASE - DETAIL 89 & 90/AD5 - REFER TO MECH. PLAN
53.	RETURN AIR GRILL (R.A.G.) - REFER TO MECHANICAL PLAN
54.	1/2" GYPSUM BOARD ON CEILING AND WALLS AT USEABLE SPACE UNDER STAIRS
55.	THE GARAGE SHALL BE SEPARATED FROM THE RESIDENCE AND ITS ATTIC AREA BY NOT LESS THAN ½" GYPSUM BOARD APPLIED TO THE GARAGE SIDE
56.	SEPARATION BETWEEN SECOND FLOOR AND GARAGE CEILING: PROVIDE (1) LAYER OF ⅝" TYPE "X" GYPSUM BOARD. WALLS SUPPORTING SECOND FLOOR AND GARAGE CEILING: PROVIDE (1) LAYER OF ½" GYPSUM BOARD
57.	EXTERIOR SHELF - REFER TO ELEV. FOR HEIGHT
58.	NOT USED
59.	NOT USED
60.	SECTIONAL GARAGE DOOR - VERIFY WINDOW OPTION
61.	NOT USED
62.	DRAFTSTOP REQUIRED IN FLOOR / CEILING SPACES EXCEEDING 1000 SQUARE FEET. DIVIDED SPACES MUST BE ROUGHLY EQUAL.
63.	OPENINGS BETWEEN GARAGE AND HOUSE SHALL BE EQUIPPED WITH SOLID WOOD DOORS NOT LESS THAN 1 3/8-INCH THICK, OR SHALL BE 20-MINUTE FIRE RATED. DOORS SHALL BE WEATHERSTRIPPED

NOTE:
FOR ALL PLAN OPTIONS REFER TO BASIC PLAN FOR INFORMATION NOT SHOWN HERE.

kb HOME

NORTH CAROLINA
50' SERIES

KB HOME
NORTH CAROLINA DIVISION

4518 S. MIAMI BLVD.
SUITE 180
DURHAM, NC 27703
TEL: (919) 768-7988
FAX: (919) 472-0582

2018 NORTH CAROLINA STATE BUILDING CODES

ISSUE DATE: 09/11/18
PROJECT No.: 1350999:57
DIVISION MGR.: MP
REVISIONS: 08/01/19

1 2018 CODE UPDATE NC19015NCP/ 03/15/19 / CTD

2 DIVISION REVISIONS NC19022NCP/ 03/15/19 / CTD

3 DIVISION REVISIONS NC19028NCP/ 04/22/19 / FAE

4 DIVISION REVISIONS NC19047NCP/ 08/01/19 / FAE

5 DIVISION REVISIONS NC20038NCP/ 10/29/20 / KBA

PLAN: 243.2939-R

SHEET: 1.5

SPEC. LEVEL 1

RALEIGH-DURHAM
50' SERIES

These designs and drawings are CONFIDENTIAL, and the exclusive property of KB Home Corporation and are not to be disclosed without the express permission of KB Home Corporation. They may not be used or duplicated without the express permission of KB Home Corporation. Copyright 2014 © KB Home Corporation, all rights reserved.

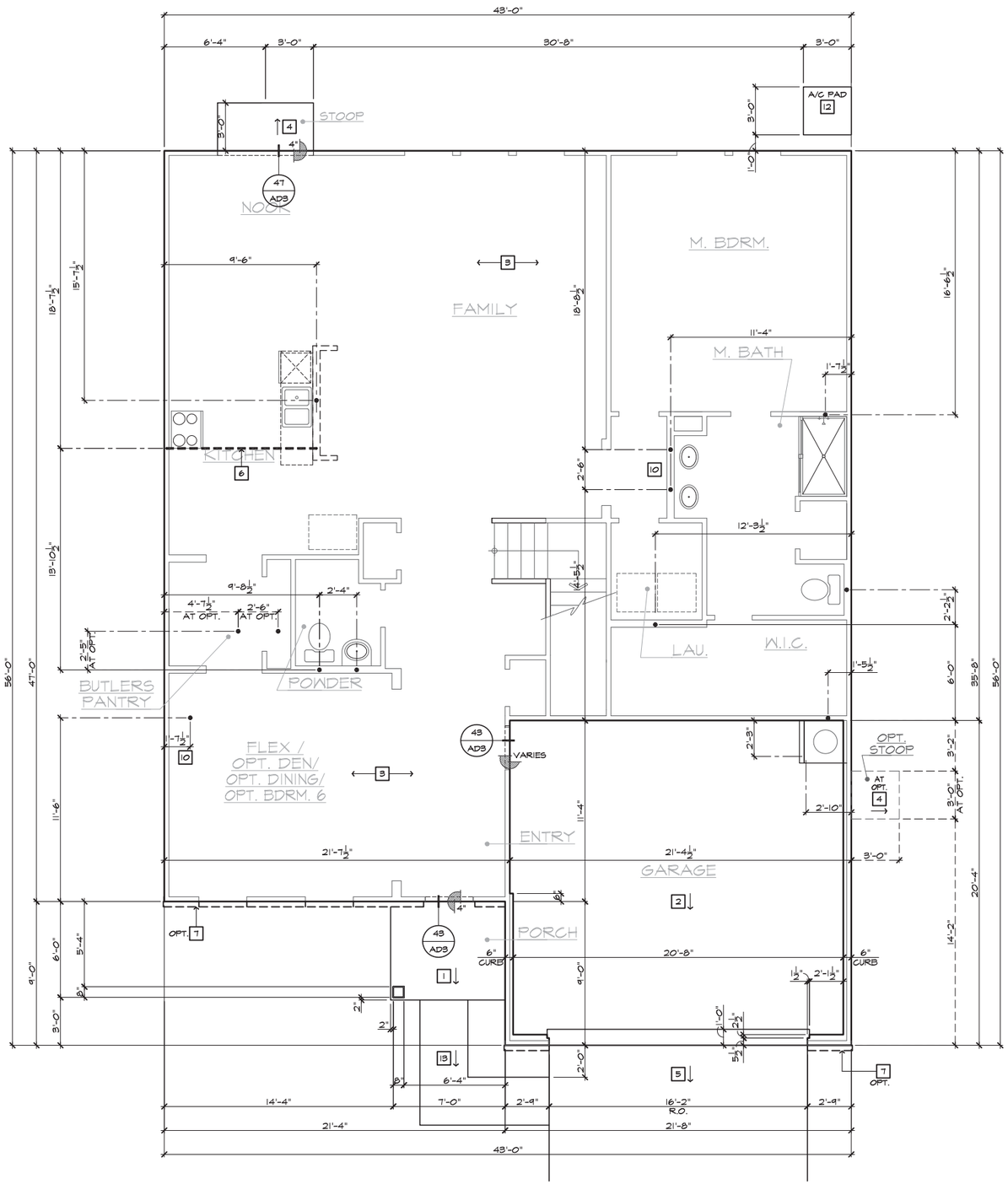

SLAB INTERFACE PLAN 'A'

SCALE 1/4"=1'-0" (22"X34") - 1/8"=1'-0" (11"X17")

BASIC PLAN AT SLAB-ON-GRADE

SLAB PLAN NOTES

2018 NC-R

NOTE: NOT ALL KEY NOTES APPLY.

1. CONCRETE PATIO/PORCH SLAB PER STRUCTURAL- SLOPE 1/4" PER FT. MIN.
2. CONCRETE GARAGE SLAB PER STRUCTURAL- SLOPE 1/8" PER. 1'-0" MIN. TOWARD DOOR OPENING.
3. CONCRETE FOUNDATION PER STRUCTURAL.
4. CONCRETE STOOP: 36"x36" STANDARD SLOPE 1/4" PER FT. MIN.
5. CONCRETE DRIVEWAY SLOPE 1/4" PER FT. MIN. AWAY FROM GARAGE DOOR OPENING.
6. PROVIDE ELECTRICAL CONDUIT UNDER SLAB AT ISLAND. VERIFY LOCATION.
7. 5" BRICK LEDGE FOR MASONRY VENEER.
8. 3" DIAMETER CONCRETE FILLED PIPE BOLLARD 36" HIGH WITH MIN. 12" EMBEDMENT INTO CONCRETE.
9. REFER TO CIVIL DRAWINGS FOR ALL FINISH SURFACE ELEVATIONS.
10. VERIFY ALL PLUMBING STUB DIMENSIONS SHOWN HERE PRIOR TO POUR OF SLAB.
11. 4" MIN. 8 1/4" MAX. TO HARD SURFACE.
12. A/C PAD. VERIFY LOCATION.
13. 36" WIDE WALKWAY- SLOPE 1/4" PER FT. MIN.

kb HOME

NORTH CAROLINA 50' SERIES

KB HOME
NORTH CAROLINA DIVISION

4518 S. MIAMI BLVD.
SUITE 180
DURHAM, NC 27703
TEL: (919) 768-7988
FAX: (919) 472-0582

2018 NORTH CAROLINA STATE BUILDING CODES

ISSUE DATE: 09/11/18
PROJECT No.: 1350999:57
DIVISION MGR.: MP
REVISIONS: 08/01/19

1. 2018 CODE UPDATE NC19015NCP/ 03/15/19 / CTD
2. DIVISION REVISIONS NC19022NCP/ 03/15/19 / CTD
3. DIVISION REVISIONS NC19028NCP/ 04/22/19 / FAE
4. DIVISION REVISIONS NC19047NCP/ 08/01/19 / FAE
5. DIVISION REVISIONS NC20038NCP/ 10/29/20 / KBA

PLAN: 243.2939-R
SHEET: 2.1

SPEC. LEVEL 1

RALEIGH-DURHAM 50' SERIES

These designs and drawings are CONFIDENTIAL, and the exclusive property of KB Home Corporation and are not to be disclosed without the express permission of KB Home Corporation. They may not be used or duplicated without the express permission of KB Home Corporation. Copyright 2014 © KB Home Corporation, all rights reserved.

#	SLAB PLAN NOTES

2018 NC-R

NOTE: NOT ALL KEY NOTES APPLY.

1. CONCRETE PATIO/PORCH SLAB PER STRUCTURAL- SLOPE 1/4" PER FT. MIN.
2. CONCRETE GARAGE SLAB PER STRUCTURAL- SLOPE 1/8" PER. 1'-0" MIN. TOWARD DOOR OPENING.
3. CONCRETE FOUNDATION PER STRUCTURAL.
4. CONCRETE STOOP: 36"x36" STANDARD SLOPE 1/4" PER FT. MIN.
5. CONCRETE DRIVEWAY SLOPE 1/4" PER FT. MIN. AWAY FROM GARAGE DOOR OPENING.
6. PROVIDE ELECTRICAL CONDUIT UNDER SLAB AT ISLAND. VERIFY LOCATION.
7. 5" BRICK LEDGE FOR MASONRY VENEER.
8. 3" DIAMETER CONCRETE FILLED PIPE BOLLARD 36" HIGH WITH MIN. 12" EMBEDMENT INTO CONCRETE.
9. REFER TO CIVIL DRAWINGS FOR ALL FINISH SURFACE ELEVATIONS.
10. VERIFY ALL PLUMBING STUB DIMENSIONS SHOWN HERE PRIOR TO POUR OF SLAB.
11. 4" MIN. 8 1/4" MAX. TO HARD SURFACE.
12. A/C PAD. VERIFY LOCATION.
13. 36" WIDE WALKWAY- SLOPE 1/4" PER FT. MIN.

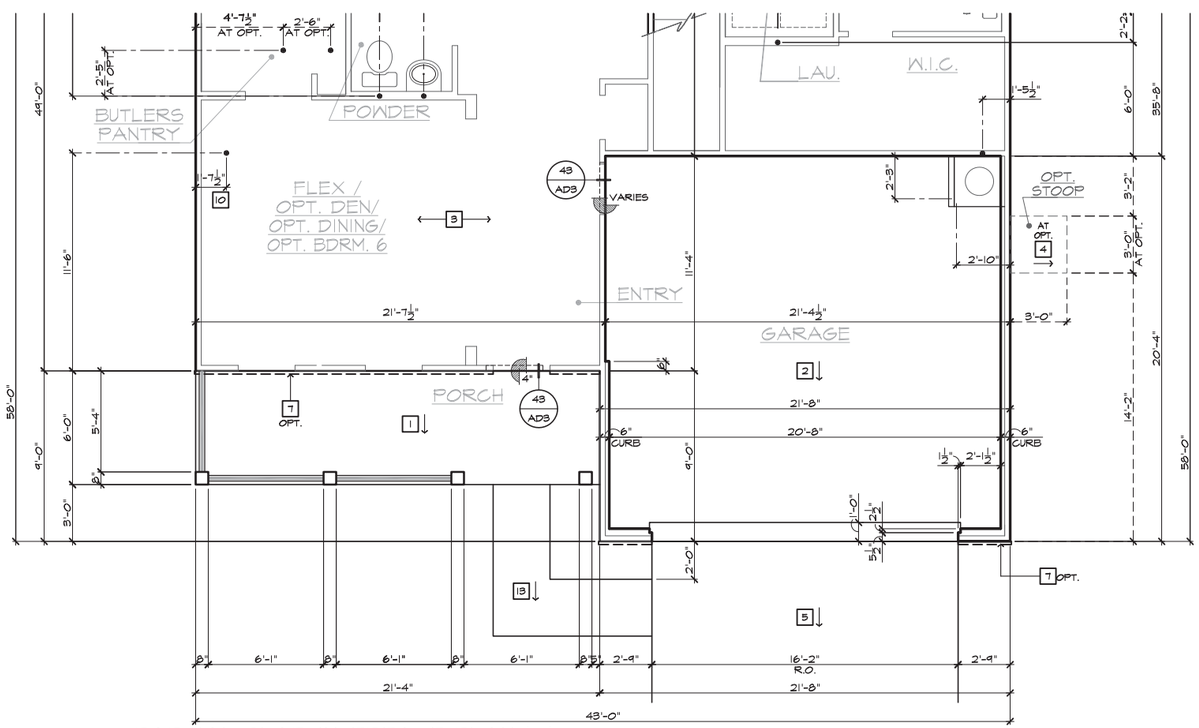

PARTIAL SLAB INTERFACE PLAN 'D'

SCALE 1/4"=1'-0" (22"X34") - 1/8"=1'-0" (11"X17")

BASIC PLAN AT SLAB-ON-GRADE

kb HOME

NORTH CAROLINA 50' SERIES

KB HOME
NORTH CAROLINA DIVISION

4518 S. MIAMI BLVD.
SUITE 180
DURHAM, NC 27703
TEL: (919) 768-7988
FAX: (919) 472-0582

2018 NORTH CAROLINA STATE BUILDING CODES

ISSUE DATE: 09/11/18
PROJECT No.: 1350999:57
DIVISION MGR.: MP
REVISIONS: 08/01/19

1. 2018 CODE UPDATE NC19015NCP/ 03/15/19 / CTD
2. DIVISION REVISIONS NC19022NCP/ 03/15/19 / CTD
3. DIVISION REVISIONS NC19028NCP/ 04/22/19 / FAE
4. DIVISION REVISIONS NC19047NCP/ 08/01/19 / FAE
5. DIVISION REVISIONS NC20038NCP/ 10/29/20 / KBA

PLAN: 243.2939-R
SHEET: 2.3

SPEC. LEVEL 1

RALEIGH-DURHAM 50' SERIES

These designs and drawings are CONFIDENTIAL, and the exclusive property of KB Home Corporation and are not to be disclosed without the express permission of KB Home Corporation. They may not be used or duplicated without the express permission of KB Home Corporation. Copyright 2014 © KB Home Corporation, all rights reserved.

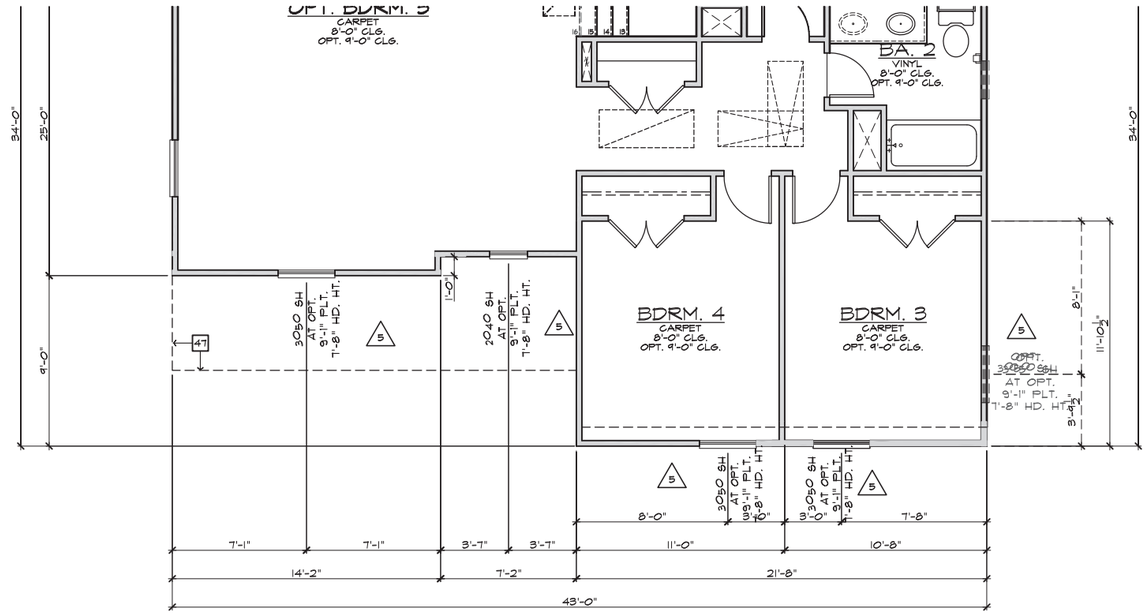

PARTIAL SECOND FLOOR PLAN 'D'

SCALE 1/4"=1'-0" (22"X34") - 1/8"=1'-0" (11"X17") BASIC PLAN

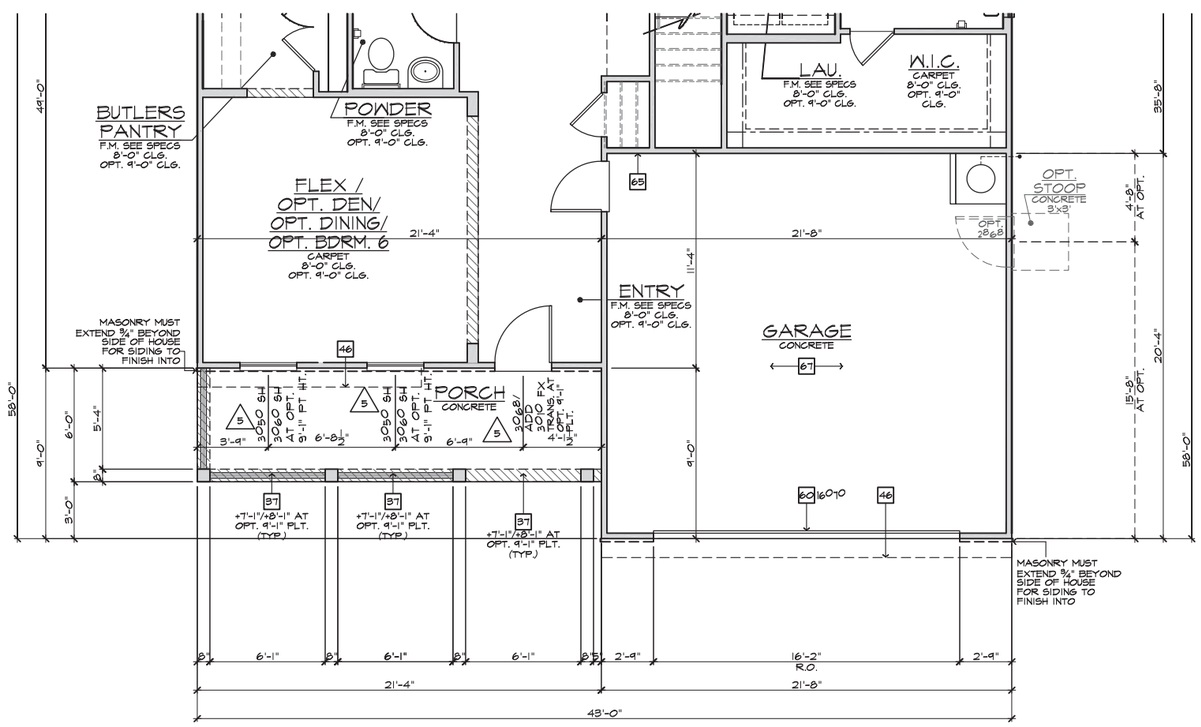

PARTIAL FIRST FLOOR PLAN 'D'

SCALE 1/4"=1'-0" (22"X34") - 1/8"=1'-0" (11"X17") BASIC PLAN

NOTE: REFER TO BASIC **FLOOR PLAN** FOR INFORMATION NOT SHOWN HERE

#	PARTIAL PLAN NOTES	2018 NC-R

NOTE: NOT ALL KEY NOTES APPLY.

31. +36" GUARD WALL DETAIL 84/AD5 OR 86/AD5
37. FLAT SOFFIT - REFER TO PLAN OR ELEVATIONS FOR HEIGHT
38. NOT USED
39. LINE OF CEILING BREAK
40. INTERIOR SHELF - REFER TO PLAN OR INT. ELEVS. FOR HGT.
41. LOW WALL - REFER TO PLAN FOR HEIGHT - DETAIL 72/AD4
43. 2x6 WALL
44. 2x6 BALLOON FRAMED WALL - REFER TO STRUCTURAL
45. DOUBLE 2x4 WALL
46. LINE OF FLOOR ABOVE
47. LINE OF FLOOR BELOW
48. EXTERIOR RAIL
55. THE GARAGE SHALL BE SEPARATED FROM THE RESIDENCE AND ITS ATTIC AREA BY NOT LESS THAN ½" GYPSUM BOARD APPLIED TO THE GARAGE SIDE
56. SEPARATION BETWEEN SECOND FLOOR AND GARAGE CEILING: PROVIDE (1) LAYER OF ⅝" TYPE "X" GYPSUM BOARD. WALLS SUPPORTING SECOND FLOOR AND GARAGE CEILING: PROVIDE (1) LAYER OF ½" GYPSUM BOARD
57. EXTERIOR SHELF - REFER TO ELEV. FOR HEIGHT
60. SECTIONAL GARAGE DOOR - VERIFY WINDOW OPTION

kb HOME

NORTH CAROLINA 50' SERIES

KB HOME
NORTH CAROLINA DIVISION

4518 S. MIAMI BLVD.
SUITE 180
DURHAM, NC 27703
TEL: (919) 768-7988
FAX: (919) 472-0582

2018 NORTH CAROLINA STATE BUILDING CODES

ISSUE DATE: 09/11/18
PROJECT No.: 1350999:57
DIVISION MGR.: MP
REVISIONS: 08/01/19

1. 2018 CODE UPDATE NC19015NCP/ 03/15/19 / CTD
2. DIVISION REVISIONS NC19022NCP/ 03/15/19 / CTD
3. DIVISION REVISIONS NC19028NCP/ 04/22/19 / FAE
4. DIVISION REVISIONS NC19047NCP/ 08/01/19 / FAE
5. DIVISION REVISIONS NC20038NCP/ 10/29/20 / KBA

PLAN: 243.2939-R
SHEET: 3.D1

SPEC. LEVEL 1
RALEIGH-DURHAM
50' SERIES

These designs and drawings are CONFIDENTIAL, and the exclusive property of KB Home Corporation and are not to be disclosed without the express permission of KB Home Corporation. They may not be used or duplicated without the express permission of KB Home Corporation. Copyright 2014 © KB Home Corporation, all rights reserved.

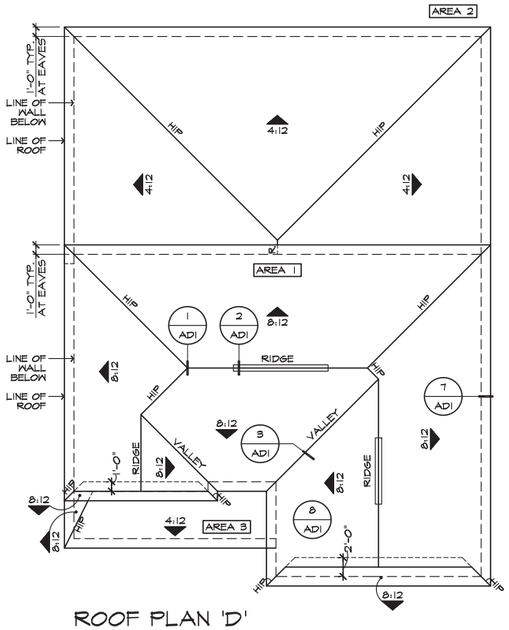

ROOF PLAN 'D'

SCALE 1/8"=1'-0" (22"X34") - 1/16"=1'-0" (11"X17")

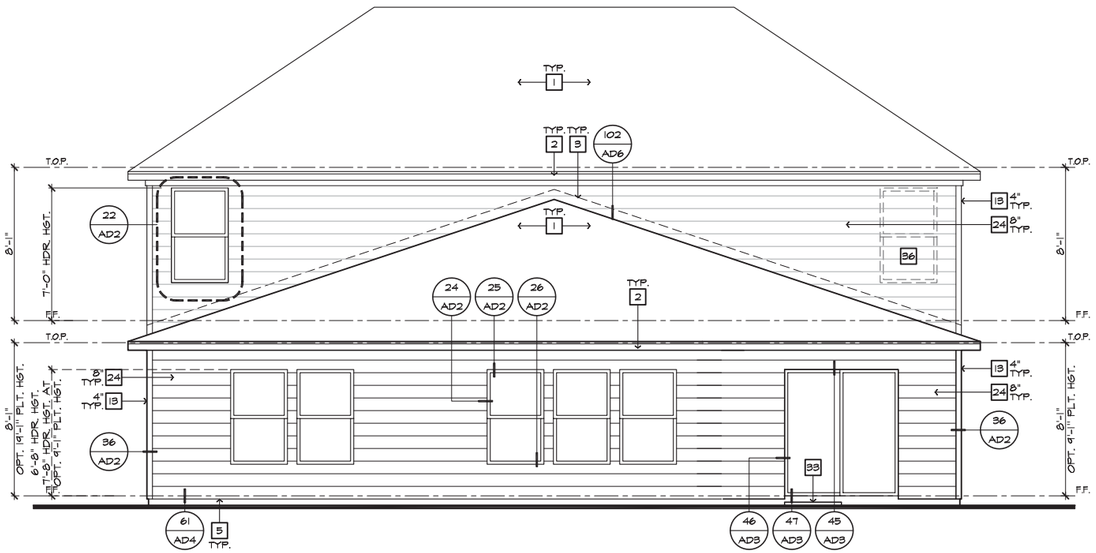

REAR ELEVATION 'D'

SCALE 1/4"=1'-0" (22"X34") - 1/8"=1'-0" (11"X17")

ELEVATION NOTES

2018 NC-R

NOTE: NOT ALL KEY NOTES APPLY.

1. ROOF MATERIAL - REFER TO ROOF NOTES
2. 2X FASCIA/BARGE BOARD WITH FASCIA CAP
3. G.I. FLASHING
4. G.I. FLASHING & SADDLE/CRICKET
5. G.I. DRIP SCREED
6. 24"x24" CHIMNEY
7. DECORATIVE VENT
8. DECORATIVE CORBEL
9. DECORATIVE SHUTTERS
10. PEDIMENT. SEE ELEVATION FOR TYPE
11. RECESSED ELEMENT
12. DECORATIVE TRIM FYPON OR EQ. SEE ELEVATION FOR TYPE
13. TRIM - SEE ELEVATION FOR SIZE
14. SYNTHETIC MATERIAL
15. PRE-MANUFACTURED DECORATIVE COLUMN (SIZE, SEE ELEV.) FYPON OR EQ. SURROUNDING STRUCTURAL POST.
16. SITE-BUILT COLUMN - SEE ELEVATION FOR TYPE
17. SHAKE SIDING
18. STONE VENEER PER SPECS
19. BRICK/MASONRY VENEER PER SPECS
20. BUILT UP BRICK COLUMN
21. SOLDIER COURSE
22. ROWLOCK COURSE
23. FRIEZE BOARD
24. SIDING W/ 4" CORNER TRIM PER SPECS
25. P.T. POST W/ WRAP - SEE STRUCTURAL FOR SIZE
26. PRE-FAB DECORATIVE TRIM
27. LIGHT WEIGHT PRECAST STONE TRIM
28. RAILINGS (+36" U.N.O.)
29. VINYL WRAP
30. DECORATIVE WINDOW/DOOR TRIM - FYPON OR EQ. SEE ELEVATION FOR SIZE.
31. BRACKET OR KICKER - FYPHON OR EQ.
32. ENTRY DOOR
33. CONCRETE STOOP/ PORCH - SEE SLAB INTERFACE PLAN.
34. SECTIONAL GARAGE DOOR PER SPECS
35. ALUMINUM WRAP
36. OPTIONAL DOOR/WINDOW - REFER TO PLAN OPTIONS
37. OPTIONAL STANDING SEAM METAL ROOF
38. KEYSTONE
39. SOLDIER CROWN
40. JACK SOLDIER COURSE
41. WATER TABLE
42. ATRIUM DOOR
43. PILASTER - SEE ELEVATION FOR TYPE

ROOF PLAN NOTES 'D'

8:12 INDICATES ROOF SLOPE AND DIRECTION, U.N.O.

ROOF MATERIAL: COMPOSITION SHINGLE

12" (INCHES) TYPICAL ROOF OVERHANG AT RAKE, U.N.O.

12" (INCHES) TYPICAL ROOF OVERHANG AT EAVE, U.N.O.

LOCATE EAVE/ RAFTER VENTS EQUALLY BALANCED AROUND HOUSE EXCEPT ABOVE SHEARWALL PANELS.

ATTIC VENT CALCULATIONS

1

PROVIDE 1 SQ. IN. OF VENTILATION PER 300 SQ. IN. OF ATTIC SPACE. PROVIDE THAT AT LEAST 50% & NO MORE THAN 80% OF THE REQ. VENTILATING AREA IS PROVIDED BY VENTILATORS LOCATED IN THE UPPER PORTION OF THE ATTIC, (HIGH VENTING) AT 3'-0" ABOVE EAVE VENT WITH THE BALANCE BEING PROVIDED BY EAVE VENTS, (LOW VENTING) (2018 N.C.-R 806.2)

✳ CALCULATION BY 1/150, HIGH/LOW VENTING NOT REQUIRED.

APPROXIMATE RIDGE VENT LOCATIONS SHOWN. ACTUAL LOCATIONS TO BE DETERMINED IN THE FIELD.

AREA 1 / MAIN

VENTILATION REQUIRED:

ATTIC AREA	1262 SQ. FT. / 300 =	4.2	SQ. FT.
	X 144 =	604.8	SQ. IN.
	X 50% =	302.4	SQ. IN.

VENTILATION PROVIDED:

HIGH			
(17) LIN. FEET OF RIDGE VENT AT (18 SQ. IN./FOOT) =		306	SQ. IN.
LOW			
(61) LIN. FEET OF VENTILATED SOFFIT (5 SQ. IN./FOOT) =		305	SQ. IN.
TOTAL VENTILATION PROVIDED:		611	SQ. IN.

AREA 2 / FIRST FLOOR ROOF (REAR)

VENTILATION REQUIRED:

ATTIC AREA	484 SQ. FT. / 300 =	3.2	SQ. FT.
	X 144 =	460.8	SQ. IN.
	X 50% =	230.4	SQ. IN.

VENTILATION PROVIDED:

HIGH			
(--) LIN. FEET OF RIDGE VENT AT (18 SQ. IN./FOOT) =		---	SQ. IN.
(2) B-144 ROOF VENT(S) AT (144 SQ. IN. EA.) =		288	SQ. IN.
LOW			
(47) LIN. FEET OF VENTILATED SOFFIT (5 SQ. IN./FOOT) =		235	SQ. IN.
TOTAL VENTILATION PROVIDED:		523	SQ. IN.

AREA 3 / PORCH

VENTILATION REQUIRED:

ATTIC AREA	✳ 113 SQ. FT. / 150 =	.75	SQ. FT.
	X 144 =	108	SQ. IN.

VENTILATION PROVIDED:

(0) LIN. FEET OF RIDGE VENT AT (18 SQ. IN./FOOT) =		0	SQ. IN.
(7) LIN. FEET OF VENTILATED SOFFIT (5 SQ. IN./FOOT) =		35	SQ. IN.
(1) B-144 ROOF VENT(S) AT (144 SQ. IN. EA.) =		144	SQ. IN.
TOTAL VENTILATION PROVIDED:		179	SQ. IN.

NOTES:

ALL VENT OPENINGS SHALL BE COVERED WITH 1/4" CORROSION RESISTANT METAL MESH.

FRAMER SHALL BE RESPONSIBLE FOR COORDINATING WITH TRUSS MANUFACTURER TO ACCOMMODATE ALL ATTIC VENTS.

ALL VENTS SHALL BE INSTALLED SO AS TO MAKE THEM WATER-PROOF & WALL MOUNTED LOUVERS SHALL BE SEALED & FLASHED W/ "MOISTOP" IN THE SAME MANNER PRESCRIBED FOR WINDOW INSTALLATION.

PROVIDE APPROVED INSULATION DAMS (BAFFLES) WHERE VENT BLOCKS ARE USED BETWEEN ROOF FRAMING MEMBERS TO PREVENT VENT HOLES FROM BEING BLOCKED BY INSULATION.

LOCATE HIGH VENTING MINIMUM 3'-0" VERTICAL DISTANCE ABOVE EAVES.

WHEN GABLE END TRUSS MEMBERS BLOCK GABLE END VENTS, PROVIDE ADEQUATE ADDITIONAL VENTILATION BY MEANS OF ROOF TILE VENTS.

kb HOME

NORTH CAROLINA
50' SERIES

KB HOME
NORTH CAROLINA DIVISION

4518 S. MIAMI BLVD.
SUITE 180
DURHAM, NC 27703
TEL: (919) 768-7988
FAX: (919) 472-0582

2018 NORTH CAROLINA STATE BUILDING CODES

ISSUE DATE:	09/11/18
PROJECT No.:	1350999:57
DIVISION MGR.:	MP
REVISIONS:	08/01/19

1 2018 CODE UPDATE NC19015NCP/ 03/15/19 / CTD

2 DIVISION REVISIONS NC19022NCP/ 03/15/19 / CTD

3 DIVISION REVISIONS NC19028NCP/ 04/22/19 / FAE

4 DIVISION REVISIONS NC19047NCP/ 08/01/19 / FAE

5 DIVISION REVISIONS NC20038NCP/ 10/29/20 / KBA

PLAN: 243.2939-R

SHEET: 3.D2

SPEC. LEVEL 1

RALEIGH-DURHAM
50' SERIES

These designs and drawings are CONFIDENTIAL, and the exclusive property of KB Home Corporation and are not to be disclosed without the express permission of KB Home Corporation. They may not be used or duplicated without the express permission of KB Home Corporation. Copyright 2014 © KB Home Corporation, all rights reserved.

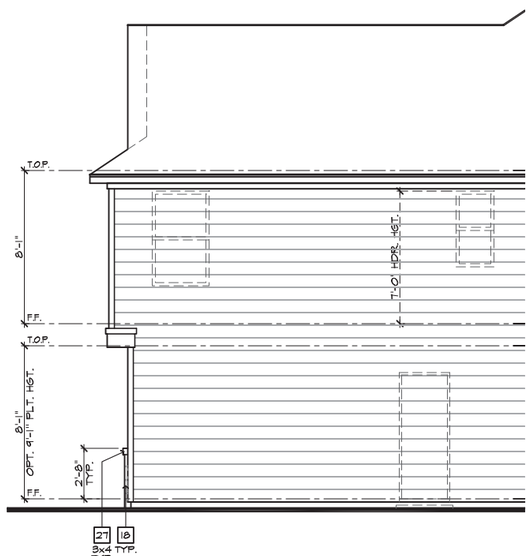

PARTIAL RIGHT ELEVATION 'D' W/ MASONRY OPTION

SCALE 1/4"=1'-0" (22"X34") - 1/8"=1'-0" (11"X17")

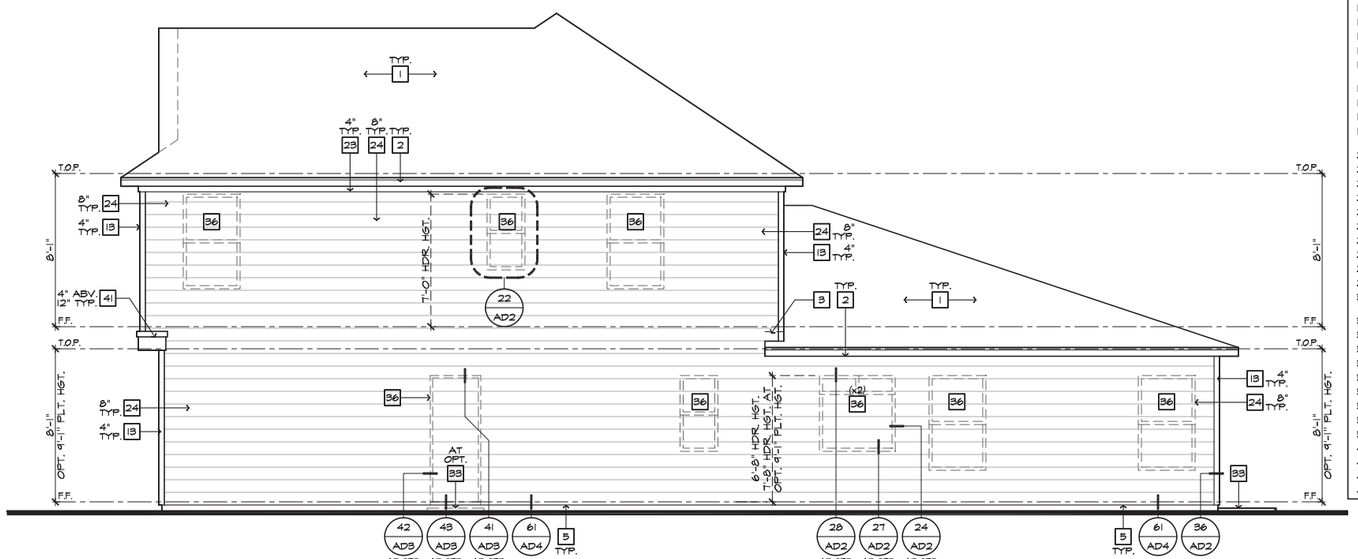

RIGHT ELEVATION 'D'

SCALE 1/4"=1'-0" (22"X34") - 1/8"=1'-0" (11"X17")

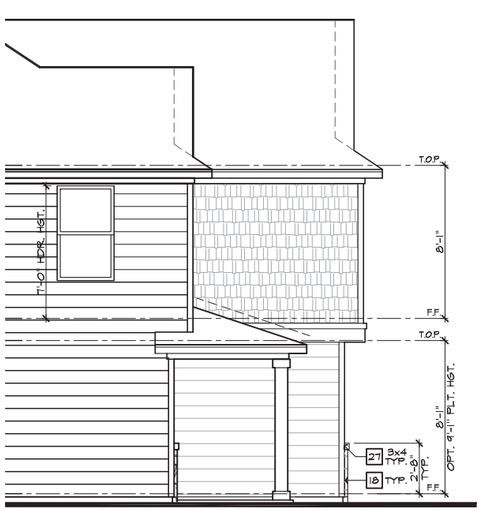

PARTIAL LEFT ELEVATION 'D' W/ MASONRY OPTION

SCALE 1/4"=1'-0" (22"X34") - 1/8"=1'-0" (11"X17")

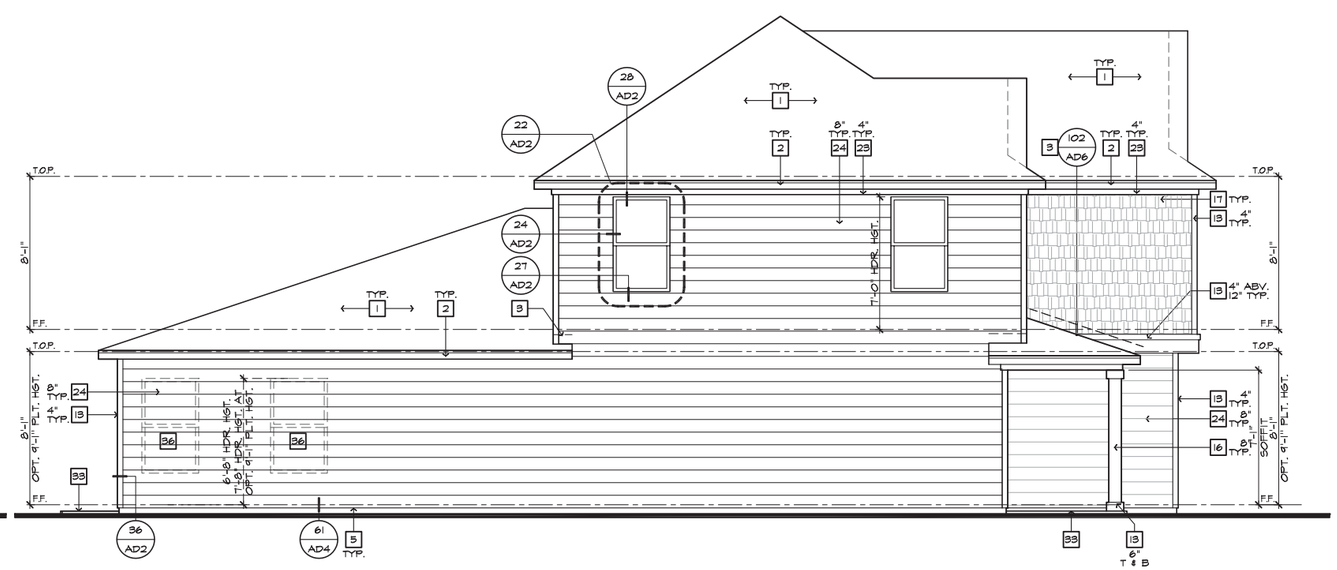

LEFT ELEVATION 'D'

SCALE 1/4"=1'-0" (22"X34") - 1/8"=1'-0" (11"X17")

ELEVATION NOTES

2018 NC-R

NOTE: NOT ALL KEY NOTES APPLY.

1. ROOF MATERIAL - REFER TO ROOF NOTES
2. 2X FASCIA/BARGE BOARD WITH FASCIA CAP
3. G.I. FLASHING
4. G.I. FLASHING & SADDLE/CRICKET
5. G.I. DRIP SCREED
6. 24"x24" CHIMNEY
7. DECORATIVE VENT
8. DECORATIVE CORBEL
9. DECORATIVE SHUTTERS
10. PEDIMENT. SEE ELEVATION FOR TYPE
11. RECESSED ELEMENT
12. DECORATIVE TRIM FYPON OR EQ. SEE ELEVATION FOR TYPE
13. TRIM - SEE ELEVATION FOR SIZE
14. SYNTHETIC MATERIAL
15. PRE-MANUFACTURED DECORATIVE COLUMN (SIZE, SEE ELEV.) FYPON OR EQ. SURROUNDING STRUCTURAL POST.
16. SITE-BUILT COLUMN - SEE ELEVATION FOR TYPE
17. SHAKE SIDING
18. STONE VENEER PER SPECS
19. BRICK/MASONRY VENEER PER SPECS
20. BUILT UP BRICK COLUMN
21. SOLDIER COURSE
22. ROWLOCK COURSE
23. FRIEZE BOARD
24. SIDING W/ 4" CORNER TRIM PER SPECS
25. P.T. POST W/ WRAP - SEE STRUCTURAL FOR SIZE
26. PRE-FAB DECORATIVE TRIM
27. LIGHT WEIGHT PRECAST STONE TRIM
28. RAILINGS (+36" U.N.O.)
29. VINYL WRAP
30. DECORATIVE WINDOW/DOOR TRIM - FYPON OR EQ. SEE ELEVATION FOR SIZE.
31. BRACKET OR KICKER - FYPHON OR EQ.
32. ENTRY DOOR
33. CONCRETE STOOP/ PORCH - SEE SLAB INTERFACE PLAN.
34. SECTIONAL GARAGE DOOR PER SPECS
35. ALUMINUM WRAP
36. OPTIONAL DOOR/WINDOW - REFER TO PLAN OPTIONS
37. OPTIONAL STANDING SEAM METAL ROOF
38. KEYSTONE
39. SOLDIER CROWN
40. JACK SOLDIER COURSE
41. WATER TABLE
42. ATRIUM DOOR
43. PILASTER - SEE ELEVATION FOR TYPE

kb HOME

NORTH CAROLINA
50' SERIES

KB HOME
NORTH CAROLINA DIVISION

4518 S. MIAMI BLVD.
SUITE 180
DURHAM, NC 27703
TEL: (919) 768-7988
FAX: (919) 472-0582

2018 NORTH CAROLINA STATE BUILDING CODES

These designs and drawings are CONFIDENTIAL, and the exclusive property of KB Home Corporation and are not to be disclosed without the express permission of KB Home Corporation. They may not be used or duplicated without the express permission of KB Home Corporation. Copyright 2014 © KB Home Corporation, all rights reserved.

ISSUE DATE: 09/11/18
PROJECT No.: 1350999:57
DIVISION MGR.: MP
REVISIONS: 08/01/19

1. 2018 CODE UPDATE NC19015NCP/ 03/15/19 / CTD
2. DIVISION REVISIONS NC19022NCP/ 03/15/19 / CTD
3. DIVISION REVISIONS NC19028NCP/ 04/22/19 / FAE
4. DIVISION REVISIONS NC19047NCP/ 08/01/19 / FAE
5. DIVISION REVISIONS NC20038NCP/ 10/29/20 / KBA

PLAN: 243.2939-R
SHEET: 3.D3

SPEC. LEVEL 1

RALEIGH-DURHAM
50' SERIES

#	ELEVATION NOTES

2018 NC-R

NOTE: NOT ALL KEY NOTES APPLY.

1. ROOF MATERIAL - REFER TO ROOF NOTES
2. 2X FASCIA/BARGE BOARD WITH FASCIA CAP
3. G.I. FLASHING
4. G.I. FLASHING & SADDLE/CRICKET
5. G.I. DRIP SCREED
6. 24"x24" CHIMNEY
7. DECORATIVE VENT
8. DECORATIVE CORBEL
9. DECORATIVE SHUTTERS
10. PEDIMENT. SEE ELEVATION FOR TYPE
11. RECESSED ELEMENT
12. DECORATIVE TRIM FYPON OR EQ. SEE ELEVATION FOR TYPE
13. TRIM - SEE ELEVATION FOR SIZE
14. SYNTHETIC MATERIAL
15. PRE-MANUFACTURED DECORATIVE COLUMN (SIZE, SEE ELEV.) FYPON OR EQ. SURROUNDING STRUCTURAL POST.
16. SITE-BUILT COLUMN - SEE ELEVATION FOR TYPE
17. SHAKE SIDING
18. STONE VENEER PER SPECS
19. BRICK/MASONRY VENEER PER SPECS
20. BUILT UP BRICK COLUMN
21. SOLDIER COURSE
22. ROWLOCK COURSE
23. FRIEZE BOARD
24. SIDING W/ 4" CORNER TRIM PER SPECS
25. P.T. POST W/ WRAP - SEE STRUCTURAL FOR SIZE
26. PRE-FAB DECORATIVE TRIM
27. LIGHT WEIGHT PRECAST STONE TRIM
28. RAILINGS (+36" U.N.O.)
29. VINYL WRAP
30. DECORATIVE WINDOW/DOOR TRIM - FYPON OR EQ. SEE ELEVATION FOR SIZE.
31. BRACKET OR KICKER - FYPHON OR EQ.
32. ENTRY DOOR
33. CONCRETE STOOP/ PORCH - SEE SLAB INTERFACE PLAN.
34. SECTIONAL GARAGE DOOR PER SPECS
35. ALUMINUM WRAP
36. OPTIONAL DOOR/WINDOW - REFER TO PLAN OPTIONS
37. OPTIONAL STANDING SEAM METAL ROOF
38. KEYSTONE
39. SOLDIER CROWN
40. JACK SOLDIER COURSE
41. WATER TABLE
42. ATRIUM DOOR
43. PILASTER - SEE ELEVATION FOR TYPE

PARTIAL FRONT ELEVATION 'D' W/ MASONRY OPTION AT 9'-0" PLT. HGT.

SCALE 1/4"=1'-0" (22"X34") - 1/8"=1'-0" (11"X17")

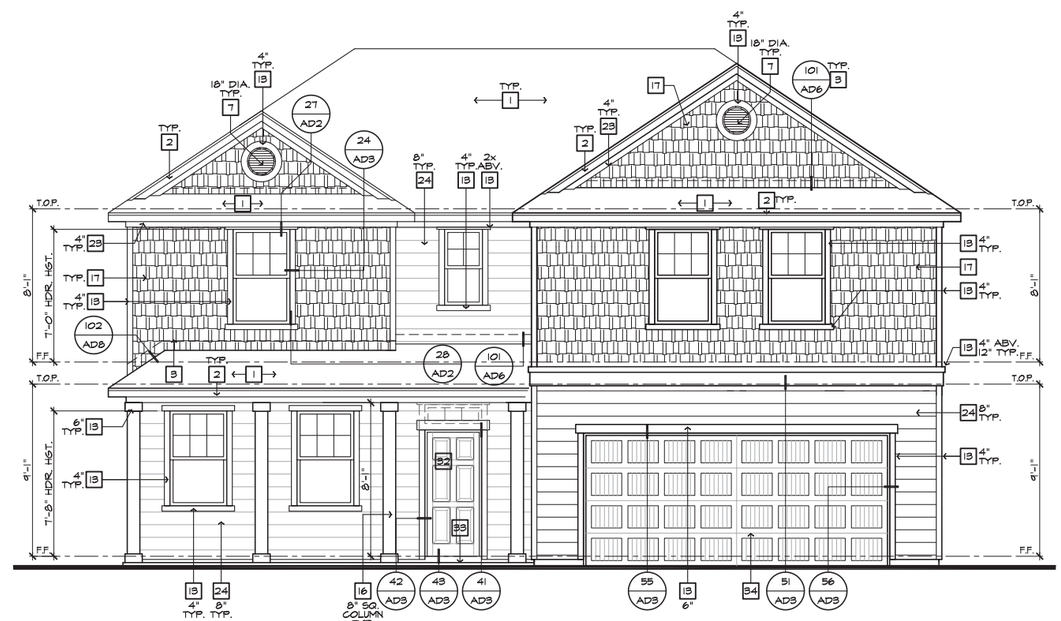

FRONT ELEVATION 'D'
AT OPTIONAL 9'-1" PLT. HGT.

SCALE 1/4"=1'-0" (22"X34") - 1/8"=1'-0" (11"X17")

kb HOME

NORTH CAROLINA
50' SERIES

KB HOME
NORTH CAROLINA DIVISION

4518 S. MIAMI BLVD.
SUITE 180
DURHAM, NC 27703
TEL: (919) 768-7988
FAX: (919) 472-0582

2018 NORTH CAROLINA STATE BUILDING CODES

ISSUE DATE: 09/11/18
PROJECT No.: 1350999:57
DIVISION MGR.: MP
REVISIONS: 08/01/19

1. 2018 CODE UPDATE NC19015NCP/ 03/15/19 / CTD
2. DIVISION REVISIONS NC19022NCP/ 03/15/19 / CTD
3. DIVISION REVISIONS NC19028NCP/ 04/22/19 / FAE
4. DIVISION REVISIONS NC19047NCP/ 08/01/19 / FAE
5. DIVISION REVISIONS NC28038NCP/ 10/29/20 / KBA

PLAN: 243.2939-R
SHEET: 3.D5

SPEC. LEVEL 1

RALEIGH-DURHAM
50' SERIES

These designs and drawings are CONFIDENTIAL, and the exclusive property of KB Home Corporation and are not to be disclosed without the express permission of KB Home Corporation. They may not be used or duplicated without the express permission of KB Home Corporation. Copyright 2014 © KB Home Corporation, all rights reserved.

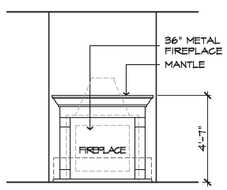

B

FAMILY
Fireplace

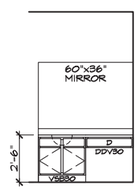

C

BATH 2

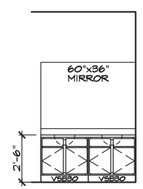

C

BATH 2
Extended Vanity
w/ Cabinet & Sink

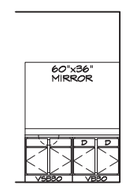

C

BATH 2
Extended Vanity
w/ Cabinet

BATH CABINETS

AT ALTERNATE SECOND FLOOR PLAN

MISC. CABINETS

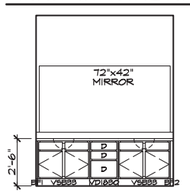

D

M. BATH
Super/Deluxe
Master Bath

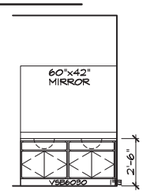

A

BATH 2
Dual Sink

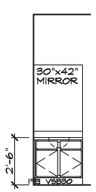

B

BATH 3

C

POWDER
w/ Den

B

POWDER
Alt. Layout w/
Bdrm. 6

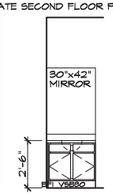

A

BATH 4
Alt. Layout w/
Bdrm. 6

C

POWDER

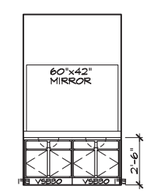

D

M. BATH

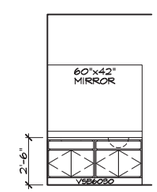

A

BATH 2

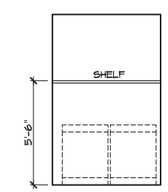

C

LAUNDRY

BATH CABINETS

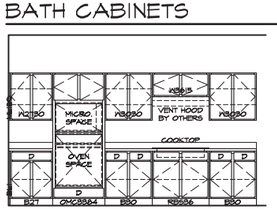

D

KITCHEN
Double Oven
& Cooktop

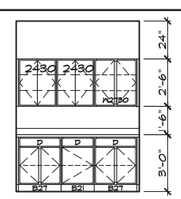

D

KITCHEN
Butler's
Pantry

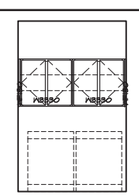

C

LAUNDRY
Opt. Upper &
Base Cabinets

KITCHEN CABINETS

LAUNDRY CABINETS

OPTIONAL INTERIOR ELEVATIONS

SCALE: 1/4"=1'-0" (22"X34") - 1/8"=1'-0" (11"X17")

BATH CABINETS

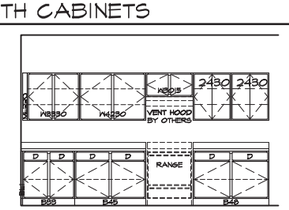

D

KITCHEN

LAUNDRY AND MISCELLANEOUS CABINETS

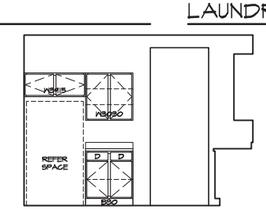

C

KITCHEN

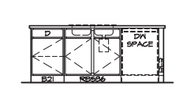

B

KITCHEN
Flush Breakfast
Bar

A

KITCHEN
Flush Breakfast
Bar

KITCHEN CABINETS

STANDARD INTERIOR ELEVATIONS

SCALE: 1/4"=1'-0" (22"X34") - 1/8"=1'-0" (11"X17")

kb HOME

NORTH CAROLINA 50' SERIES

KB HOME
NORTH CAROLINA DIVISION

4518 S. MIAMI BLVD.
SUITE 180
DURHAM, NC 27703
TEL: (919) 768-7988
FAX: (919) 472-0582

2018 NORTH CAROLINA STATE BUILDING CODES

ISSUE DATE: 09/11/18
PROJECT No.: 1350999:57
DIVISION MGR.: MP
REVISIONS: 08/01/19

1. 2018 CODE UPDATE NC19015NCP/ 03/15/19 / CTD
2. DIVISION REVISIONS NC19022NCP/ 03/15/19 / CTD
3. DIVISION REVISIONS NC19028NCP/ 04/22/19 / FAE
4. DIVISION REVISIONS NC19047NCP/ 08/01/19 / FAE
5. DIVISION REVISIONS NC20038NCP/ 10/29/20 / KBA

PLAN: 243.2939-R
SHEET: 4.1

SPEC. LEVEL 1
RALEIGH-DURHAM
50' SERIES

These designs and drawings are CONFIDENTIAL, and the exclusive property of KB Home Corporation and are not to be disclosed without the express permission of KB Home Corporation. They may not be used or duplicated without the express permission of KB Home Corporation. Copyright 2014 © KB Home Corporation, all rights reserved.

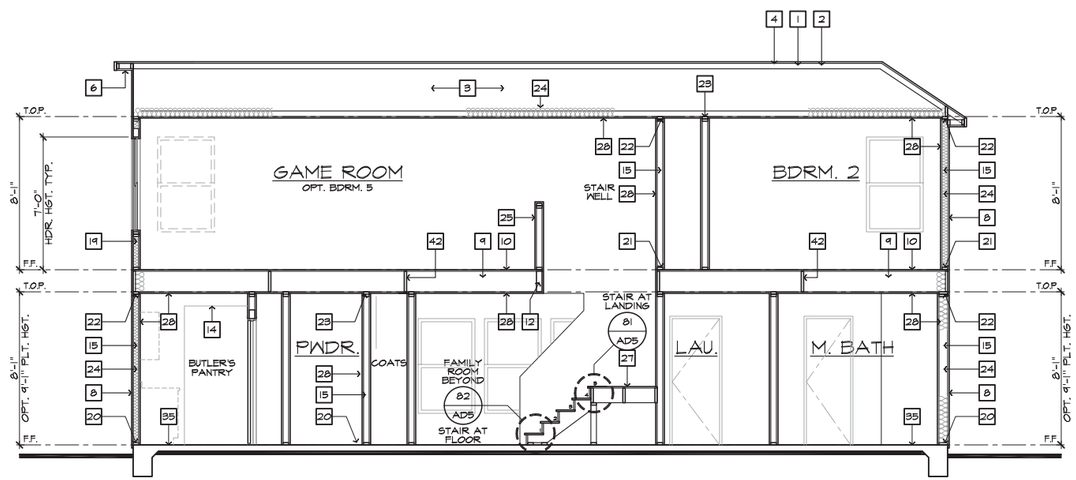

SECTION "A"

SCALE 1/4"=1'-0" (22"X34") - 1/8"=1'-0" (11"X17")

AT SLAB ON GRADE

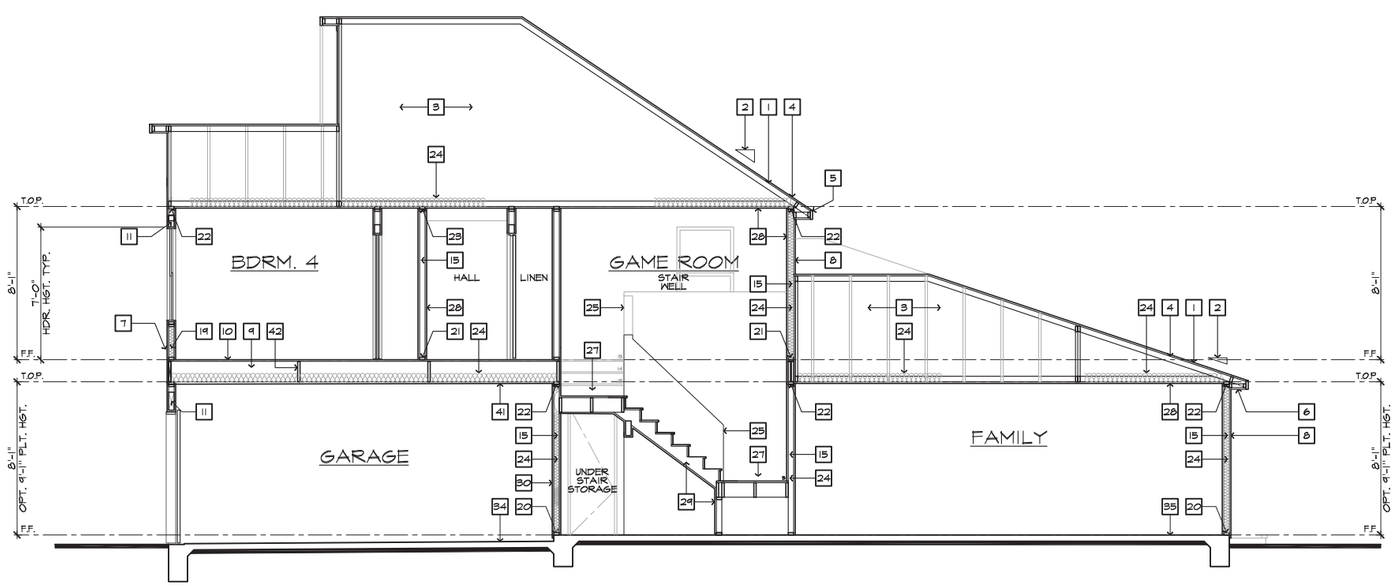

SECTION "B"

SCALE 1/4"=1'-0" (22"X34") - 1/8"=1'-0" (11"X17")

AT SLAB ON GRADE

SECTION NOTES

2018 NC-R

NOTE: NOT ALL KEY NOTES APPLY.

1. ROOF MATERIAL - REFER TO ROOF NOTES
2. ROOF PITCH - REFER TO ROOF NOTES
3. PRE-MANUFACTURED WOOD ROOF TRUSS SYSTEM - SEE STRUCTURAL & TRUSS CALCS
4. ROOF SHEATHING PER STRUCTURAL
5. 2x FASCIA/BARGE BOARD
6. CONT. SOFFITED EAVE W/ VENTING
7. G.I. FLASHING - ROOF TO WALL
8. EXTERIOR FINISH PER ELEVATIONS
9. FLOOR FRAMING PER STRUCTURAL
10. FLOOR SHEATHING PER STRUCTURAL
11. HEADER PER STRUCTURAL
12. FLUSH BEAM PER STRUCTURAL
13. DROPPED BEAM PER STRUCTURAL
14. FLAT/ ARCHED SOFFIT PER PLAN
15. 2x4 STUD WALL
16. 2x6 STUD WALL
17. 2x6 BALLOON FRAMED WALL PER STRUCTURAL
18. DBL. 2x4 WALL PER PLAN
19. 2x CRIPPLES @ 16" O.C.
20. 2x PRESSURE TREATED SILL PLATE
21. 2x SOLE PLATE
22. DBL. 2x TOP PLATE @ EXTERIOR & BEARING WALLS
23. 1x OVER 2x TOP PLATE @ INTERIOR & NON-BEARING WALLS
24. INSULATION MATERIAL PER ENERGY CALCULATIONS
25. MIN. 36" HIGH GUARD - SEE PLAN FOR HEIGHT
26. LOW WALL - SEE PLAN FOR HEIGHT
27. STAIR TREADS AND RISERS PER PLAN; - MIN. 10" TREAD & MAX. 7 3/4" RISER
28. INTERIOR FINISH; - MIN. 1/2" GYP. BD. @ WALLS & SAG RESISTANT OR 5/8" DRYWALL @ CEILING
29. MIN. 1/2" GYP. BD. ON CEILING & WALLS @ USEABLE SPACE UNDER STAIRS.
30. GARAGE SHALL BE SEPARATED FROM THE RESIDENCE AND ITS ATTIC AREA BY NOT LESS THAT 1/2" GYP. BD. @ GARAGE SIDE WALLS & 5/8" UNDER LIVING AREA U.N.O.
31. MATERIAL TO UNDERSIDE OF ROOF SHEATHING
32. INTERIOR SHELF - MIN. 1/2" GYP. BD. OVER 3/8" PLY WD.
33. CONCRETE PATIO/ PORCH SLAB PER STRUCTURAL - SLOPE 1/4" PER FT. MIN.
34. CONCRETE GARAGE SLAB PER STRUCTURAL - SLOPE 2" MIN.
35. CONCRETE FOUNDATION PER STRUCTURAL
36. LINE OF OPTIONAL TRAY CEILING/ STEP CEILING
37. LINE OF OPTIONAL VOLUME CEILING
38. PROFILE OF OPTIONAL COVERED PATIO
39. EXTERIOR SOFFIT MATERIAL - REFER TO ELEVATIONS.
40. 8" BLOCK WALL
41. 5/8" TYPE-X DRYWALL @ GARAGE CEILING
42. WHEN THERE IS USABLE SPACE ABOVE AND BELOW THE CONCEALED SPACE OF A FLOOR-CEILING ASSEMBLY IN A SINGLE-FAMILY DWELLING, DRAFT STOPS SHALL BE INSTALLED SO THAT THE AREA OF THE CONCEALED SPACE DOES NOT EXCEED 1,000 SQUARE FEET. DRAFTSTOPPING SHALL DIVIDE THE CONCEALED SPACE INTO APPROXIMATELY EQUAL AREAS.

kb HOME

NORTH CAROLINA
50' SERIES

KB HOME
NORTH CAROLINA DIVISION

4518 S. MIAMI BLVD.
SUITE 180
DURHAM, NC 27703
TEL: (919) 768-7988
FAX: (919) 472-0582

2018 NORTH CAROLINA STATE BUILDING CODES

ISSUE DATE: 09/11/18
PROJECT No.: 1350999:57
DIVISION MGR.: MP
REVISIONS: 08/01/19

1. 2018 CODE UPDATE NC19015NCP/ 03/15/19 / CTD
2. DIVISION REVISIONS NC19022NCP/ 03/15/19 / CTD
3. DIVISION REVISIONS NC19028NCP/ 04/22/19 / FAE
4. DIVISION REVISIONS NC19047NCP/ 08/01/19 / FAE
5. DIVISION REVISIONS NC20038NCP/ 10/29/20 / KBA

PLAN: 243.2939-R
SHEET: 4.2

SPEC. LEVEL 1
RALEIGH-DURHAM
50' SERIES

These designs and drawings are CONFIDENTIAL, and the exclusive property of KB Home Corporation and are not to be disclosed without the express permission of KB Home Corporation. They may not be used or duplicated without the express permission of KB Home Corporation. Copyright 2014 © KB Home Corporation, all rights reserved.

NOTE:
REFER TO BASIC UTILITY PLAN FOR INFORMATION NOT SHOWN HERE

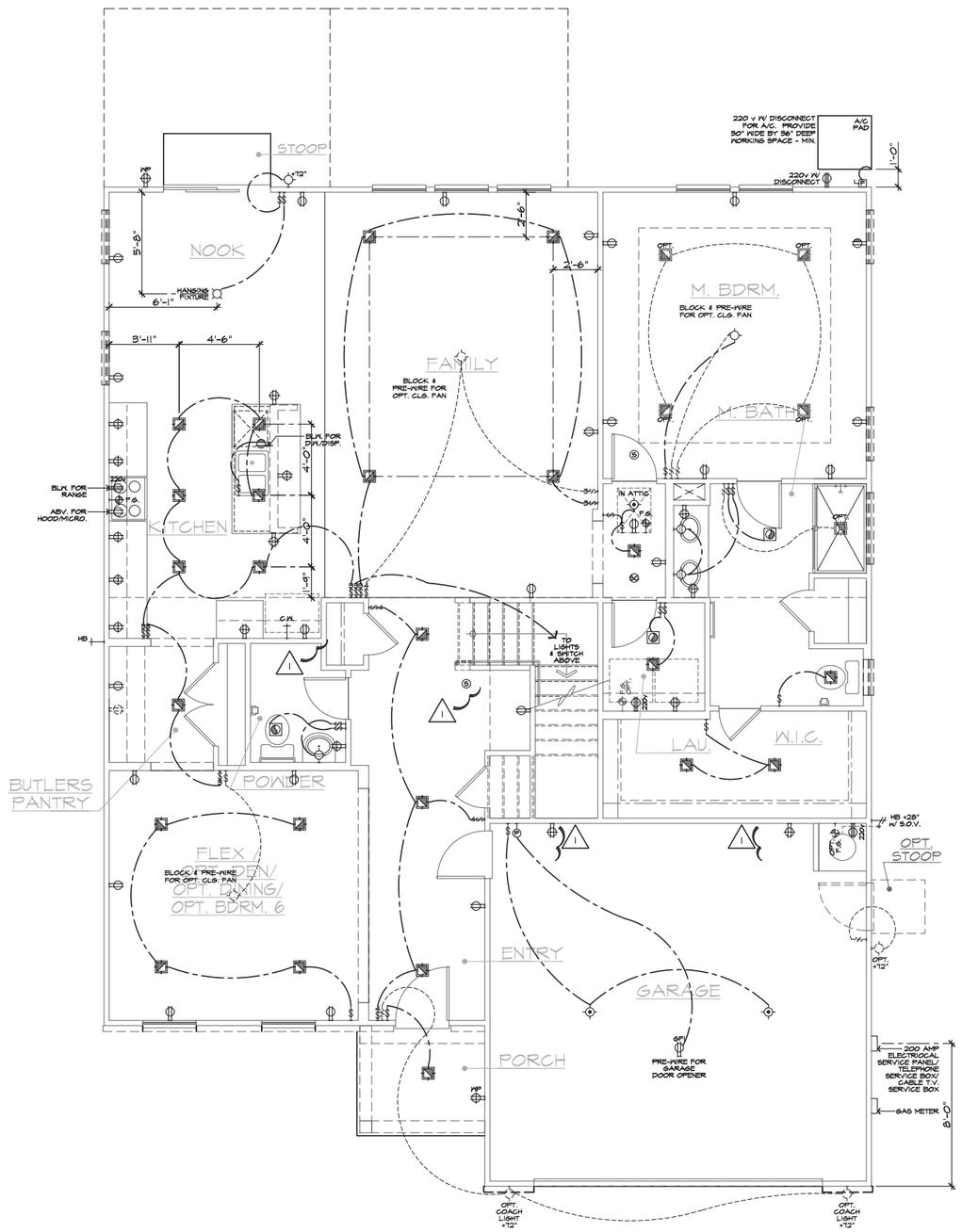

FIRST FLOOR UTLITY PLAN

SCALE 1/4"=1'-0" (22"X34") - 1/8"=1'-0" (11"X17")

BASIC PLAN

UTILITY LEGEND

2018 NC-R/ 2017 NEC.

- 120v DUPLEX CONVENIENCE RECEPTACLE ARC FAULT(AFCI) AND TAMPER RESISTANT(TR) 12" ABV. FIN. FLR. TYPICAL U.N.O.
- WP GFI — 120v (TR) RECEPTACLE W/ GFI CIRCUIT W/ WATER RESISTANT HOUSING
- WP
- GFI — 120v (TR) RECEPTACLE W/ GFI CIRCUIT
- FUSED DISCONNECT
- 120v (AFCI & TR) RECESSED FLOOR RECEPTACLE W/ COVER
- 120v (AFCI & TR) DUPLEX CONVENIENCE RECEPTACLE SWITCH CONTROLLED, 1/2 HOT
- 220 v — 220v SINGLE CONVENIENCE RECEPTACLE HEIGHT NOTED AS PER PLAN
- TWO-POLE LIGHT SWITCH AT 42" ABV. FIN. FLR. 8" ABOVE COUNTER U.N.O.
- 3 — THREE-POLE LIGHT SWITCH
- 4 — FOUR-POLE LIGHT SWITCH
- W.P. — WALL MOUNTED LIGHT FIXTURE W/ WATER RESISTANT HOUSING
- WALL MOUNTED INCANDESCENT LIGHT FIXTURE
- WALL MOUNTED FLUORESCENT LIGHT FIXTURE
- CEILING MOUNTED INCANDESCENT LIGHT FIXTURE
- CEILING MOUNTED FLUORESCENT LIGHT FIXTURE
- HANGING INCANDESCENT LIGHT FIXTURE
- RECESSED INCANDESCENT DIRECTIONAL LIGHT FIXTURE (EYE BALL)
- RECESSED INCANDESCENT LIGHT FIXTURE
- LIGHTING - TRAVERSE II LED FIXTURE - PER SPECS
- W.P. — RECESSED INCANDESCENT LIGHT FIXTURE W/ WATER RESISTANT HOUSING
- RECESSED FLUORESCENT LIGHT FIXTURE
- RECESSED EXHAUST FAN
- RECESSED EXHAUST FAN/ INCANDESCENT LIGHT COMBINATION
- RECESSED EXHAUST FAN/ FLUORESCENT LIGHT COMBINATION
- INCANDESCENT WALL SCONCE
- ILLUMINATED ADDRESS SIGN - VISIBLE FROM STREET
- 24"x48" FLUORESCENT LIGHT BOX (CEILING MOUNTED)
- 12"x48" FLUORESCENT LIGHT BOX (CEILING MOUNTED)
- OPTIONAL PRE-WIRED CEILING FAN AND SWITCH - LOCATED IN CENTER OF ROOM U.N.O.
- CEILING MOUNTED JUNCTION BOX
- WALL MOUNTED JUNCTION BOX
- DOOR CHIME
- TV — CATV RECEPTACLE
- PUSH BUTTON
- PHONE OUTLET
- SERVICE BOX
- HB — HOSE BIB
- HB — HOSE BIB W/ S.O.V.
- C/M — WATER STUB FOR ICE MAKER
- SM — APPROVED CEILING MOUNTED SMOKE DETECTOR TO BE HARD WIRED WITH BATTERY BACK-UP AND INTERCONNECTED
- CO — APPROVED CARBON MONOXIDE ALARM/ SMOKE DET.
- T — THERMOSTAT (VERIFY LOCATION W/ HVAC PLAN)
- GAS TAP
- GAS KEY - FIREPLACE GAS VALVES SHALL BE LOCATED OUTSIDE OF REQUIRED HEARTH AREA, BUT NO MORE THAN 48" FROM GAS OUTLET

SWITCHING FOR ROOMS W/ CLG. FAN OPTIONS

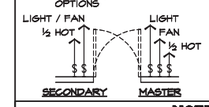

24" MIN. SEPERATION OF ELECTRICAL BOXES AS SHOWN BELOW

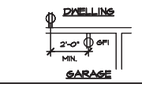

NOTES

1. MECHANICAL, ELECTRICAL AND PLUMBING SYSTEMS ARE SHOWN FOR INTENT ONLY. THESE SYSTEMS SHALL BE ENGINEERED BY OTHERS. THE CONTRACTOR SHALL BE RESPONSIBLE FOR PROPER INSTALLATION AND PLACEMENT. ALL HEIGHTS SHOWN ARE TO CENTERLINE OF FIXTURE.
2. PROVIDE SWITCH, LIGHT, 120v (AFCI & TR) DUPLEX RECEPTACLE, & FUEL GAS STUB OR 220v RECEPTACLE IN ATTIC FOR F.A.U. - PER COMMUNITY SPECIFICATIONS.
3. SMOKE DETECTORS IN ROOMS WITH VOLUME CEILING TO BE LOCATED AT HIGHEST POINT OF CEILING
4. 20 FOOT #4 REBAR FOR UFER GROUND AND ADDITIONAL COLD WATER GROUND. REFER TO SLAB INTERFACE PLAN FOR LOCATION.
5. 200 AMP ELECTRICAL PANEL (DEFAULT). ELECTRICAL PLAN CHECK PERMIT REQUIRED IF LOAD EXCEED 400 AMPS.

kb HOME

NORTH CAROLINA 50' SERIES

KB HOME
NORTH CAROLINA DIVISION

4518 S. MIAMI BLVD.
SUITE 180
DURHAM, NC 27703
TEL: (919) 768-7988
FAX: (919) 472-0582

2018 NORTH CAROLINA STATE BUILDING CODES

ISSUE DATE: 09/11/18
PROJECT No.: 1350999:57
DIVISION MGR.: D.S.
REVISIONS: 08/01/19

1. 2018 CODE UPDATE NC19015NCP/ 03/15/19 / CTD
2. DIVISION REVISIONS NC19022NCP/ 03/15/19 / CTD
3. DIVISION REVISIONS NC19028NCP/ 04/22/19 / FAE
4. DIVISION REVISIONS NC19047NCP/ 08/01/19 / FAE
5. DIVISION REVISIONS NC20038NCP/ 10/29/20 / KBA

PLAN: 243.2939-R
SHEET: 5.1

SPEC. LEVEL 1
RALEIGH-DURHAM
50' SERIES

These designs and drawings are CONFIDENTIAL, and the exclusive property of KB Home Corporation and are not to be disclosed without the express permission of KB Home Corporation. They may not be used or duplicated without the express permission of KB Home Corporation. Copyright 2014 © KB Home Corporation, all rights reserved.

NOTE:
REFER TO BASIC **UTILITY PLAN** FOR INFORMATION NOT SHOWN HERE

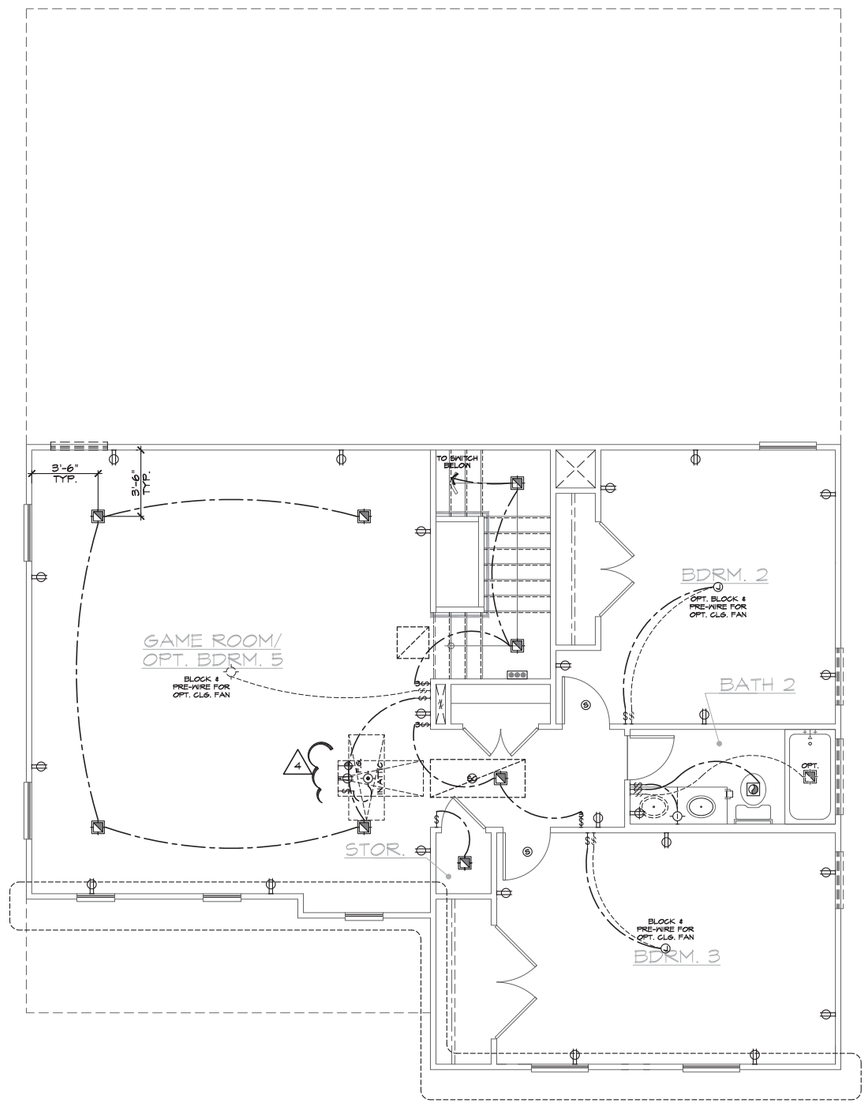

ENLARGED BEDROOM 2 & 3 UTILITY PLAN - ('A', 'B', 'C', 'D' SIM.)

SCALE 1/4"=1'-0" (22"x34") - 1/8"=1'-0" (11"x17")

2

UTILITY LEGEND

2018 NC+N/ 2017 NEC

- 120v DUPLEX CONVENIENCE RECEPTACLE ARC FAULT(AFCI) AND TAMPER RESISTANT(TR) 12" ABV. FIN. FLR. TYPICAL U.N.O.
- WP GFI / WP — 120v (TR) RECEPTACLE W/ GFI CIRCUIT W/ WATER RESISTANT HOUSING
- GFI — 120v (TR) RECEPTACLE W/ GFI CIRCUIT
- FUSED DISCONNECT
- 120v (AFCI & TR) RECESSED FLOOR RECEPTACLE W/ COVER
- 120v (AFCI & TR) DUPLEX CONVENIENCE RECEPTACLE SWITCH CONTROLLED, 1/2 HOT
- 220 v — 220v SINGLE CONVENIENCE RECEPTACLE HEIGHT NOTED AS PER PLAN
- TWO-POLE LIGHT SWITCH AT 42" ABV. FIN. FLR. 8" ABOVE COUNTER U.N.O.
- 3 — THREE-POLE LIGHT SWITCH
- 4 — FOUR-POLE LIGHT SWITCH
- W.P. — WALL MOUNTED LIGHT FIXTURE W/ WATER RESISTANT HOUSING
- WALL MOUNTED INCANDESCENT LIGHT FIXTURE
- WALL MOUNTED FLUORESCENT LIGHT FIXTURE
- CEILING MOUNTED INCANDESCENT LIGHT FIXTURE
- CEILING MOUNTED FLUORESCENT LIGHT FIXTURE
- HANGING INCANDESCENT LIGHT FIXTURE
- RECESSED INCANDESCENT DIRECTIONAL LIGHT FIXTURE (EYE BALL)
- RECESSED INCANDESCENT LIGHT FIXTURE
- LIGHTING - TRAVERSE II LED FIXTURE - PER SPECS
- W.P. — RECESSED INCANDESCENT LIGHT FIXTURE W/ WATER RESISTANT HOUSING
- RECESSED FLUORESCENT LIGHT FIXTURE
- RECESSED EXHAUST FAN
- RECESSED EXHAUST FAN/ INCANDESCENT LIGHT COMBINATION
- RECESSED EXHAUST FAN/ FLUORESCENT LIGHT COMBINATION
- INCANDESCENT WALL SCONCE
- ILLUMINATED ADDRESS SIGN - VISIBLE FROM STREET
- 24"x48" FLUORESCENT LIGHT BOX (CEILING MOUNTED)
- 12"x48" FLUORESCENT LIGHT BOX (CEILING MOUNTED)
- OPTIONAL PRE-WIRED CEILING FAN AND SWITCH - LOCATED IN CENTER OF ROOM U.N.O.
- CEILING MOUNTED JUNCTION BOX
- WALL MOUNTED JUNCTION BOX
- DOOR CHIME
- TV — CATV RECEPTACLE
- PUSH BUTTON
- PHONE OUTLET
- SERVICE BOX
- HB — HOSE BIB
- HB — HOSE BIB W/ S.O.V.
- ICM — WATER STUB FOR ICE MAKER
- APPROVED CEILING MOUNTED SMOKE DETECTOR TO BE HARD WIRED WITH BATTERY BACK-UP AND INTERCONNECTED
- APPROVED CARBON MONOXIDE ALARM/ SMOKE DET.
- T — THERMOSTAT (VERIFY LOCATION W/ HVAC PLAN)
- GAS TAP
- GAS KEY - FIREPLACE GAS VALVES SHALL BE LOCATED OUTSIDE OF REQUIRED HEARTH AREA, BUT NO MORE THAN 48" FROM GAS OUTLET

SWITCHING FOR ROOMS W/ CLG. FAN OPTIONS

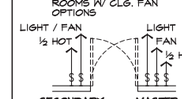

24" MIN. SEPERATION OF ELECTRICAL BOXES AS SHOWN BELOW

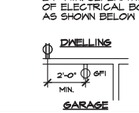

NOTES

1. MECHANICAL, ELECTRICAL AND PLUMBING SYSTEMS ARE SHOWN FOR INTENT ONLY. THESE SYSTEMS SHALL BE ENGINEERED BY OTHERS. THE CONTRACTOR SHALL BE RESPONSIBLE FOR PROPER INSTALLATION AND PLACEMENT. ALL HEIGHTS SHOWN ARE TO CENTERLINE OF FIXTURE.
2. PROVIDE SWITCH, LIGHT, 120v (AFCI & TR) DUPLEX RECEPTACLE, & FUEL GAS STUB OR 220v RECEPTACLE IN ATTIC FOR F.A.U. - PER COMMUNITY SPECIFICATIONS.
3. SMOKE DETECTORS IN ROOMS WITH VOLUME CEILING TO BE LOCATED AT HIGHEST POINT OF CEILING
4. 20 FOOT #4 REBAR FOR UFER GROUND AND ADDITIONAL COLD WATER GROUND. REFER TO SLAB INTERFACE PLAN FOR LOCATION.
5. 200 AMP ELECTRICAL PANEL (DEFAULT). ELECTRICAL PLAN CHECK PERMIT REQUIRED IF LOAD EXCEED 400 AMPS.

kb HOME ®

NORTH CAROLINA 50' SERIES

KB HOME
NORTH CAROLINA DIVISION

4518 S. MIAMI BLVD.
SUITE 180
DURHAM, NC 27703
TEL: (919) 768-7988
FAX: (919) 472-0582

2018 NORTH CAROLINA STATE BUILDING CODES

ISSUE DATE: 09/11/18
PROJECT No.: 1350999:57
DIVISION MGR.: D.S.
REVISIONS: 08/01/19

1. 2018 CODE UPDATE NC19015NCP/ 03/15/19 / CTD
2. DIVISION REVISIONS NC19022NCP/ 03/15/19 / CTD
3. DIVISION REVISIONS NC19028NCP/ 04/22/19 / FAE
4. DIVISION REVISIONS NC19047NCP/ 08/01/19 / FAE
5. DIVISION REVISIONS NC20038NCP/ 10/29/20 / KBA

PLAN: 243.2939-R
SHEET: 5.3

SPEC. LEVEL 1
RALEIGH-DURHAM
50' SERIES

These designs and drawings are CONFIDENTIAL, and the exclusive property of KB Home Corporation and are not to be disclosed without the express permission of KB Home Corporation. They may not be used or duplicated without the express permission of KB Home Corporation. Copyright 2014 © KB Home Corporation, all rights reserved.

NOTE:
REFER TO BASIC **UTILITY PLAN** FOR INFORMATION NOT SHOWN HERE

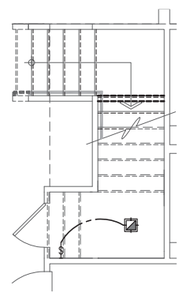

STORAGE

AT STAIRS

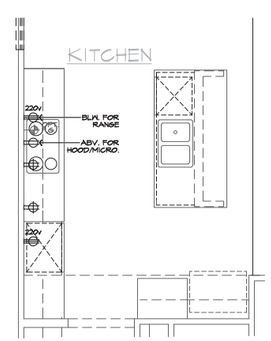

ISLAND

AT KITCHEN

UTILITY LEGEND

2018 NC-R/ 2017 NEC

- 120v DUPLEX CONVENIENCE RECEPTACLE ARC FAULT(AFCI) AND TAMPER RESISTANT(TR) 12" ABV. FIN. FLR. TYPICAL U.N.O.
- WP GFI — 120v (TR) RECEPTACLE W/ GFI CIRCUIT W/ WATER RESISTANT HOUSING
- WP
- GFI — 120v (TR) RECEPTACLE W/ GFI CIRCUIT
- GFI
- F — FUSED DISCONNECT
- 120v (AFCI & TR) RECESSED FLOOR RECEPTACLE W/ COVER
- 120v (AFCI & TR) DUPLEX CONVENIENCE RECEPTACLE SWITCH CONTROLLED, 1/2 HOT
- 220 v — 220v SINGLE CONVENIENCE RECEPTACLE HEIGHT NOTED AS PER PLAN
- TWO-POLE LIGHT SWITCH AT 42" ABV. FIN. FLR. 8" ABOVE COUNTER U.N.O.
- 3 — THREE-POLE LIGHT SWITCH
- 4 — FOUR-POLE LIGHT SWITCH
- W.P. — WALL MOUNTED LIGHT FIXTURE W/ WATER RESISTANT HOUSING
- WALL MOUNTED INCANDESCENT LIGHT FIXTURE
- WALL MOUNTED FLUORESCENT LIGHT FIXTURE
- CEILING MOUNTED INCANDESCENT LIGHT FIXTURE
- CEILING MOUNTED FLUORESCENT LIGHT FIXTURE
- HANGING INCANDESCENT LIGHT FIXTURE
- RECESSED INCANDESCENT DIRECTIONAL LIGHT FIXTURE (EYE BALL)
- RECESSED INCANDESCENT LIGHT FIXTURE
- LIGHTING - TRAVERSE II LED FIXTURE - PER SPECS
- W.P. — RECESSED INCANDESCENT LIGHT FIXTURE W/ WATER RESISTANT HOUSING
- RECESSED FLUORESCENT LIGHT FIXTURE
- RECESSED EXHAUST FAN
- RECESSED EXHAUST FAN/ INCANDESCENT LIGHT COMBINATION
- RECESSED EXHAUST FAN/ FLUORESCENT LIGHT COMBINATION
- INCANDESCENT WALL SCONCE
- ILLUMINATED ADDRESS SIGN - VISIBLE FROM STREET
- 24"x48" FLUORESCENT LIGHT BOX (CEILING MOUNTED)
- 12"x48" FLUORESCENT LIGHT BOX (CEILING MOUNTED)
- OPTIONAL PRE-WIRED CEILING FAN AND SWITCH - LOCATED IN CENTER OF ROOM U.N.O.
- CEILING MOUNTED JUNCTION BOX
- WALL MOUNTED JUNCTION BOX
- DOOR CHIME
- TV — CATV RECEPTACLE
- PUSH BUTTON
- PHONE OUTLET
- SERVICE BOX
- HB — HOSE BIB
- HB — HOSE BIB W/ S.O.V.
- CM — WATER STUB FOR ICE MAKER
- APPROVED CEILING MOUNTED SMOKE DETECTOR TO BE HARD WIRED WITH BATTERY BACK-UP AND INTERCONNECTED
- APPROVED CARBON MONOXIDE ALARM/ SMOKE DET.
- T — THERMOSTAT (VERIFY LOCATION W/ HVAC PLAN)
- GAS TAP
- GAS KEY - FIREPLACE GAS VALVES SHALL BE LOCATED OUTSIDE OF REQUIRED HEARTH AREA, BUT NO MORE THAN 48" FROM GAS OUTLET

SWITCHING FOR ROOMS W/ CLG. FAN OPTIONS

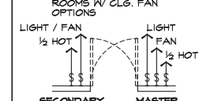

24" MIN. SEPERATION OF ELECTRICAL BOXES AS SHOWN BELOW

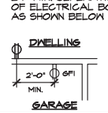

NOTES

1. MECHANICAL, ELECTRICAL AND PLUMBING SYSTEMS ARE SHOWN FOR INTENT ONLY. THESE SYSTEMS SHALL BE ENGINEERED BY OTHERS. THE CONTRACTOR SHALL BE RESPONSIBLE FOR PROPER INSTALLATION AND PLACEMENT. ALL HEIGHTS SHOWN ARE TO CENTERLINE OF FIXTURE.
2. PROVIDE SWITCH, LIGHT, 120v (AFCI & TR) DUPLEX RECEPTACLE, & FUEL GAS STUB OR 220v RECEPTACLE IN ATTIC FOR F.A.U. - PER COMMUNITY SPECIFICATIONS.
3. SMOKE DETECTORS IN ROOMS WITH VOLUME CEILING TO BE LOCATED AT HIGHEST POINT OF CEILING
4. 20 FOOT #4 REBAR FOR UFER GROUND AND ADDITIONAL COLD WATER GROUND. REFER TO SLAB INTERFACE PLAN FOR LOCATION.
5. 200 AMP ELECTRICAL PANEL (DEFAULT). ELECTRICAL PLAN CHECK PERMIT REQUIRED IF LOAD EXCEED 400 AMPS.

kb HOME

NORTH CAROLINA 50' SERIES

KB HOME
NORTH CAROLINA DIVISION

4518 S. MIAMI BLVD.
SUITE 180
DURHAM, NC 27703
TEL: (919) 768-7988
FAX: (919) 472-0582

2018 NORTH CAROLINA STATE BUILDING CODES

ISSUE DATE: 09/11/18
PROJECT No.: 1350999:57
DIVISION MGR.: D.S.
REVISIONS: 08/01/19

1. 2018 CODE UPDATE NC19015NCP/ 03/15/19 / CTD
2. DIVISION REVISIONS NC19022NCP/ 03/15/19 / CTD
3. DIVISION REVISIONS NC19028NCP/ 04/22/19 / FAE
4. DIVISION REVISIONS NC19047NCP/ 08/01/19 / FAE
5. DIVISION REVISIONS NC20038NCP/ 10/29/20 / KBA

PLAN: 243.2939-R
SHEET: 5.4

SPEC. LEVEL 1

RALEIGH-DURHAM 50' SERIES

These designs and drawings are CONFIDENTIAL, and the exclusive property of KB Home Corporation and are not to be disclosed without the express permission of KB Home Corporation. They may not be used or duplicated without the express permission of KB Home Corporation. Copyright 2014 © KB Home Corporation, all rights reserved.

FIRST FLOOR UTILITY PLAN OPTIONS

SCALE 1/4"=1'-0" (22"X34") - 1/8"=1'-0" (11"X17")

NOTE:
REFER TO BASIC UTILITY PLAN FOR INFORMATION NOT SHOWN HERE

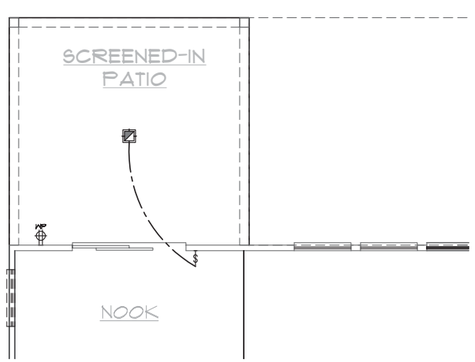

12'X12'-8" EXTENDED SCREENED-IN PATIO

AT NOOK

FIRST FLOOR UTILITY PLAN OPTIONS

SCALE 1/4"=1'-0" (22"X34") - 1/8"=1'-0" (11"X17")

UTILITY LEGEND

2018 NC+R/ 2017 NEC

- 120V DUPLEX CONVENIENCE RECEPTACLE ARC FAULT(AFCI) AND TAMPER RESISTANT(TR) 12" ABV. FIN. FLR. TYPICAL U.N.O.
- WP GFI — 120V (TR) RECEPTACLE W/ GFI CIRCUIT W/ WATER RESISTANT HOUSING
- WP
- GFI — 120V (TR) RECEPTACLE W/ GFI CIRCUIT
- FUSED DISCONNECT
- 120V (AFCI & TR) RECESSED FLOOR RECEPTACLE W/ COVER
- 120V (AFCI & TR) DUPLEX CONVENIENCE RECEPTACLE SWITCH CONTROLLED, 1/2 HOT
- 220 V — 220V SINGLE CONVENIENCE RECEPTACLE HEIGHT NOTED AS PER PLAN
- TWO-POLE LIGHT SWITCH AT 42" ABV. FIN. FLR. 8" ABOVE COUNTER U.N.O.
- 3 — THREE-POLE LIGHT SWITCH
- 4 — FOUR-POLE LIGHT SWITCH
- W.P. — WALL MOUNTED LIGHT FIXTURE W/ WATER RESISTANT HOUSING
- WALL MOUNTED INCANDESCENT LIGHT FIXTURE
- WALL MOUNTED FLUORESCENT LIGHT FIXTURE
- CEILING MOUNTED INCANDESCENT LIGHT FIXTURE
- CEILING MOUNTED FLUORESCENT LIGHT FIXTURE
- HANGING INCANDESCENT LIGHT FIXTURE
- RECESSED INCANDESCENT DIRECTIONAL LIGHT FIXTURE (EYE BALL)
- RECESSED INCANDESCENT LIGHT FIXTURE
- LIGHTING - TRAVERSE II LED FIXTURE - PER SPECS
- W.P. — RECESSED INCANDESCENT LIGHT FIXTURE W/ WATER RESISTANT HOUSING
- RECESSED FLUORESCENT LIGHT FIXTURE
- RECESSED EXHAUST FAN
- RECESSED EXHAUST FAN/ INCANDESCENT LIGHT COMBINATION
- RECESSED EXHAUST FAN/ FLUORESCENT LIGHT COMBINATION
- INCANDESCENT WALL SCONCE
- ILLUMINATED ADDRESS SIGN - VISIBLE FROM STREET
- 24"x48" FLUORESCENT LIGHT BOX (CEILING MOUNTED)
- 12"x48" FLUORESCENT LIGHT BOX (CEILING MOUNTED)
- OPTIONAL PRE-WIRED CEILING FAN AND SWITCH - LOCATED IN CENTER OF ROOM U.N.O.
- CEILING MOUNTED JUNCTION BOX
- WALL MOUNTED JUNCTION BOX
- DOOR CHIME
- TV — CATV RECEPTACLE
- PUSH BUTTON
- PHONE OUTLET
- SERVICE BOX
- HB — HOSE BIB
- HB — HOSE BIB W/ S.O.V.
- ICM — WATER STUB FOR ICE MAKER
- APPROVED CEILING MOUNTED SMOKE DETECTOR TO BE HARD WIRED WITH BATTERY BACK-UP AND INTERCONNECTED
- APPROVED CARBON MONOXIDE ALARM/ SMOKE DET.
- T — THERMOSTAT (VERIFY LOCATION W/ HVAC PLAN)
- GAS TAP
- GAS KEY - FIREPLACE GAS VALVES SHALL BE LOCATED OUTSIDE OF REQUIRED HEARTH AREA, BUT NO MORE THAN 48" FROM GAS OUTLET

SWITCHING FOR ROOMS W/ CLG. FAN OPTIONS

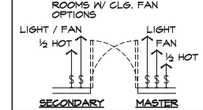

24" MIN. SEPERATION OF ELECTRICAL BOXES AS SHOWN BELOW

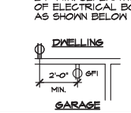

NOTES

1. MECHANICAL, ELECTRICAL AND PLUMBING SYSTEMS ARE SHOWN FOR INTENT ONLY. THESE SYSTEMS SHALL BE ENGINEERED BY OTHERS. THE CONTRACTOR SHALL BE RESPONSIBLE FOR PROPER INSTALLATION AND PLACEMENT. ALL HEIGHTS SHOWN ARE TO CENTERLINE OF FIXTURE.
2. PROVIDE SWITCH, LIGHT, 120V (AFCI & TR) DUPLEX RECEPTACLE, & FUEL GAS STUB OR 220V RECEPTACLE IN ATTIC FOR F.A.U. - PER COMMUNITY SPECIFICATIONS.
3. SMOKE DETECTORS IN ROOMS WITH VOLUME CEILING TO BE LOCATED AT HIGHEST POINT OF CEILING
4. 20 FOOT #4 REBAR FOR UFER GROUND AND ADDITIONAL COLD WATER GROUND. REFER TO SLAB INTERFACE PLAN FOR LOCATION.
5. 200 AMP ELECTRICAL PANEL (DEFAULT). ELECTRICAL PLAN CHECK PERMIT REQUIRED IF LOAD EXCEED 400 AMPS.

kb HOME

NORTH CAROLINA 50' SERIES

KB HOME
NORTH CAROLINA DIVISION

4518 S. MIAMI BLVD.
SUITE 180
DURHAM, NC 27703
TEL: (919) 768-7988
FAX: (919) 472-0582

2018 NORTH CAROLINA STATE BUILDING CODES

ISSUE DATE: 09/11/18
PROJECT No.: 1350999:57
DIVISION MGR.: D.S.
REVISIONS: 08/01/19

1. 2018 CODE UPDATE NC19015NCP/ 03/15/19 / CTD
2. DIVISION REVISIONS NC19022NCP/ 03/15/19 / CTD
3. DIVISION REVISIONS NC19028NCP/ 04/22/19 / FAE
4. DIVISION REVISIONS NC19047NCP/ 08/01/19 / FAE
5. DIVISION REVISIONS NC20038NCP/ 10/29/20 / KBA

PLAN: 243.2939-R
SHEET: 5.5

SPEC. LEVEL 1
RALEIGH-DURHAM
50' SERIES

These designs and drawings are CONFIDENTIAL, and the exclusive property of KB Home Corporation and are not to be disclosed without the express permission of KB Home Corporation. They may not be used or duplicated without the express permission of KB Home Corporation. Copyright 2014 © KB Home Corporation, all rights reserved.

REFER TO BASIC ELEVATION FOR INFORMATION NOT SHOWN HERE

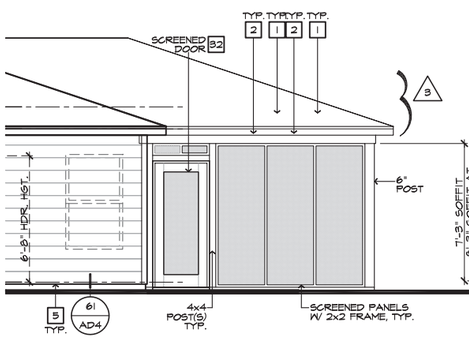

PARTIAL
RIGHT ELEVATION

SCALE 1/4"=1'-0" (22"X34") - 1/8"=1'-0" (11"X17")

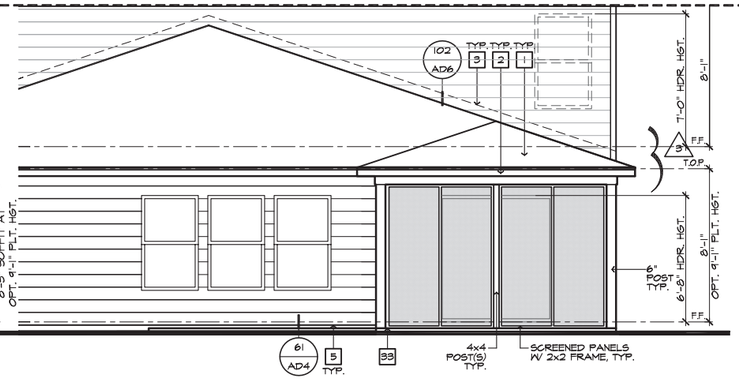

PARTIAL REAR ELEVATION

SCALE 1/4"=1'-0" (22"X34") - 1/8"=1'-0" (11"X17")

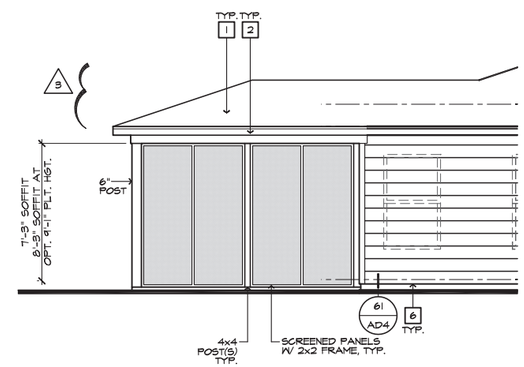

PARTIAL
LEFT ELEVATION

SCALE 1/4"=1'-0" (22"X34") - 1/8"=1'-0" (11"X17")

ROOF PLAN NOTES 'X/Y/Z'

4:12 — INDICATES ROOF SLOPE AND DIRECTION, U.N.O.

ROOF MATERIAL: COMPOSITION SHINGLE

12" (INCHES) TYPICAL ROOF OVERHANG AT RAKE, U.N.O.

12" (INCHES) TYPICAL ROOF OVERHANG AT EAVE, U.N.O.

LOCATE EAVE/ RAFTER VENTS EQUALLY BALANCED AROUND HOUSE EXCEPT ABOVE SHEARWALL PANELS.

ATTIC VENT CALCULATIONS

PROVIDE 1 SQ. IN. OF VENTILATION PER 300 SQ. IN. OF ATTIC SPACE. PROVIDE THAT AT LEAST 50% & NO MORE THAN 80% OF THE REQ. VENTILATING AREA IS PROVIDED BY VENTILATORS LOCATED IN THE UPPER PORTION OF THE ATTIC, (HIGH VENTING) AT 3'-0" ABOVE EAVE VENT WITH THE BALANCE BEING PROVIDED BY EAVE VENTS, (LOW VENTING) (2018 N.C.-R 806.2)
✳ CALCULATION BY 1/150, HIGH/LOW VENTING NOT REQUIRED.

APPROXIMATE RIDGE VENT LOCATIONS SHOWN.
ACTUAL LOCATIONS TO BE DETERMINED IN THE FIELD.

AREA 2 / FIRST FLOOR (REAR) W/ OPT. 12x12 SCREENED-IN DECK

VENTILATION REQUIRED:			
ATTIC AREA	1141 SQ. FT. / 300 =	3.80	SQ. FT.
	X 144 =	547.2	SQ. IN.
	X 50% =	273.6	SQ. IN.
VENTILATION PROVIDED:			
HIGH			
(2) 5-144 ROOF VENT(S) AT	(144 SQ. IN. EA.) =	288	SQ. IN.
LOW			
(5) LIN. FEET OF RIDGE VENT AT	(18 SQ. IN./FOOT) =	90	SQ. IN.
(60) LIN. FEET OF VENTILATED SOFFIT	(5 SQ. IN./FOOT) =	300	SQ. IN.
TOTAL VENTILATION PROVIDED:		678	SQ. IN.

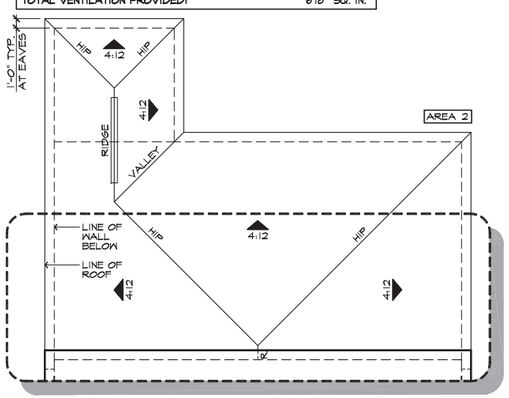

REFER TO BASIC ROOF FOR
INFORMATION NOT SHOWN HERE

PARTIAL ROOF PLAN

SCALE 1/8"=1'-0" (22"X34") - 1/16"=1'-0" (11"X17")

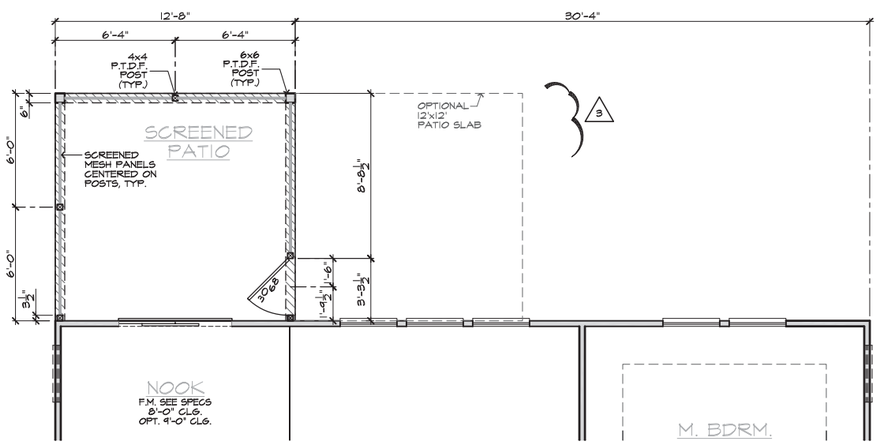

PARTIAL FIRST FLOOR PLAN

SCALE 1/4"=1'-0" (22"X34") - 1/8"=1'-0" (11"X17")

12'X12-8' SCREENED-IN COVERED PATIO

ELEVATION NOTES

2018 NC-R

NOTE: NOT ALL KEY NOTES APPLY.

1. ROOF MATERIAL - REFER TO ROOF NOTES
2. 2X FASCIA/BARGE BOARD WITH FASCIA CAP
3. G.I. FLASHING
4. G.I. FLASHING & SADDLE/CRICKET
5. G.I. DRIP SCREED
6. 24"x24" CHIMNEY
7. DECORATIVE VENT
8. DECORATIVE CORBEL
9. DECORATIVE SHUTTERS
10. PEDIMENT. SEE ELEVATION FOR TYPE
11. RECESSED ELEMENT
12. DECORATIVE TRIM FYPON OR EQ. SEE ELEVATION FOR TYPE
13. TRIM - SEE ELEVATION FOR SIZE
14. SYNTHETIC MATERIAL
15. PRE-MANUFACTURED DECORATIVE COLUMN (SIZE, SEE ELEV.) FYPON OR EQ. SURROUNDING STRUCTURAL POST.
16. SITE-BUILT COLUMN - SEE ELEVATION FOR TYPE
17. SHAKE SIDING
18. STONE VENEER PER SPECS
19. BRICK/MASONRY VENEER PER SPECS
20. BUILT UP BRICK COLUMN
21. SOLDIER COURSE
22. ROWLOCK COURSE
23. FRIEZE BOARD
24. SIDING W/ 4" CORNER TRIM PER SPECS
25. P.T. POST W/ WRAP - SEE STRUCTURAL FOR SIZE
26. PRE-FAB DECORATIVE TRIM
27. LIGHT WEIGHT PRECAST STONE TRIM
28. RAILINGS (+36" U.N.O.)
29. VINYL WRAP
30. DECORATIVE WINDOW/DOOR TRIM - FYPON OR EQ. SEE ELEVATION FOR SIZE.
31. BRACKET OR KICKER - FYPHON OR EQ.
32. ENTRY DOOR
33. CONCRETE STOOP/ PORCH - SEE SLAB INTERFACE PLAN.
34. SECTIONAL GARAGE DOOR PER SPECS
35. ALUMINUM WRAP
36. OPTIONAL DOOR/WINDOW - REFER TO PLAN OPTIONS
37. OPTIONAL STANDING SEAM METAL ROOF
38. KEYSTONE
39. SOLDIER CROWN
40. JACK SOLDIER COURSE
41. WATER TABLE
42. ATRIUM DOOR
43. PILASTER - SEE ELEVATION FOR TYPE

PARTIAL PLAN NOTES

2018 NC-R

NOTE: NOT ALL KEY NOTES APPLY.

31. +36" GUARD WALL DETAIL 84/AD5 OR 86/AD5
37. FLAT SOFFIT - REFER TO PLAN OR ELEVATIONS FOR HEIGHT
38. NOT USED
39. LINE OF CEILING BREAK
40. INTERIOR SHELF - REFER TO PLAN OR INT. ELEVS. FOR HGT.
41. LOW WALL - REFER TO PLAN FOR HEIGHT - DETAIL 72/AD4
43. 2x6 WALL
44. 2x6 BALLOON FRAMED WALL - REFER TO STRUCTURAL
45. DOUBLE 2x4 WALL
46. LINE OF FLOOR ABOVE
47. LINE OF FLOOR BELOW
48. EXTERIOR RAIL
55. THE GARAGE SHALL BE SEPARATED FROM THE RESIDENCE AND ITS ATTIC AREA BY NOT LESS THAN ½" GYPSUM BOARD APPLIED TO THE GARAGE SIDE
56. SEPARATION BETWEEN SECOND FLOOR AND GARAGE CEILING: PROVIDE (1) LAYER OF ⅝" TYPE "X" GYPSUM BOARD. WALLS SUPPORTING SECOND FLOOR AND GARAGE CEILING: PROVIDE (1) LAYER OF ½" GYPSUM BOARD
57. EXTERIOR SHELF - REFER TO ELEV. FOR HEIGHT
60. SECTIONAL GARAGE DOOR - VERIFY WINDOW OPTION

FOUNDATION PLAN NOTES

2018 NC-R

NOTE: NOT ALL KEY NOTES APPLY.

1. CONCRETE PATIO/PORCH SLAB PER STRUCTURAL- SLOPE 1/4" PER FT. MIN.
2. CONCRETE GARAGE SLAB PER STRUCTURAL- SLOPE 1/8" PER. 1'-0" MIN. TOWARD DOOR OPENING.
3. FOUNDATION PER STRUCTURAL.
4. STAIR LANDING: 36"x36" MIN.
5. CONCRETE DRIVEWAY SLOPE 1/4" PER FT. MIN. AWAY FROM GARAGE DOOR OPENING.
6. PROVIDE UNDER FLOOR VENTILATION
7. 4" TOE KICK FOR MASONRY VENEER.
8. 3" DIAMETER CONCRETE FILLED PIPE BOLLARD 36" HIGH WITH MIN. 12" EMBEDMENT INTO CONCRETE.
9. REFER TO CIVIL DRAWINGS FOR ALL FINISH SURFACE ELEVATIONS.
10. VERIFY LOCATION OF PIER FOOTINGS PER STRUCTURAL.
11. 4" MIN. T 3/4" MAX. TO HARD SURFACE.
12. A/C PAD. VERIFY LOCATION.
13. CRAWL SPACE ACCESS
14. 36" WIDE WALKWAY- SLOPE 1/4" PER FT. MIN.

NOTE:
REFER TO BASIC **ELEVATIONS** FOR INFORMATION NOT SHOWN HERE

NOTE:
REFER TO BASIC **FLOOR PLAN** FOR INFORMATION NOT SHOWN HERE

kb HOME

NORTH CAROLINA
50' SERIES

KB HOME
NORTH CAROLINA DIVISION

4518 S. MIAMI BLVD.
SUITE 180
DURHAM, NC 27703
TEL: (919) 768-7988
FAX: (919) 472-0582

2018 NORTH CAROLINA STATE BUILDING CODES

ISSUE DATE:	09/11/18
PROJECT No.:	1350999:57
DIVISION MGR.:	MP
REVISIONS:	08/01/19

1. 2018 CODE UPDATE NC19015NCP/ 03/15/19 / CTD
2. DIVISION REVISIONS NC19022NCP/ 03/15/19 / CTD
3. DIVISION REVISIONS NC19028NCP/ 04/22/19 / FAE
4. DIVISION REVISIONS NC19047NCP/ 08/01/19 / FAE
5. DIVISION REVISIONS NC20038NCP/ 10/29/20 / KBA

PLAN: 243.2939-R

SHEET: 8.A7

SPEC. LEVEL 1

RALEIGH-DURHAM
50' SERIES

These designs and drawings are CONFIDENTIAL, and the exclusive property of KB Home Corporation. They may not be used or duplicated without the express permission of KB Home Corporation. Copyright 2014 © KB Home Corporation, all rights reserved.

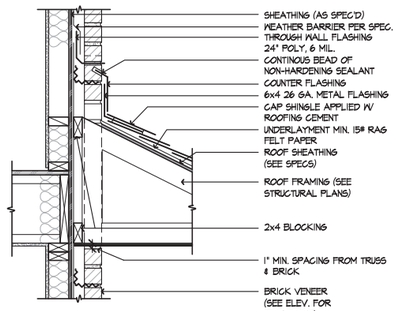

BRICK THROUGH ROOF 17

SCALE 1"=1'-0" SE-01017a

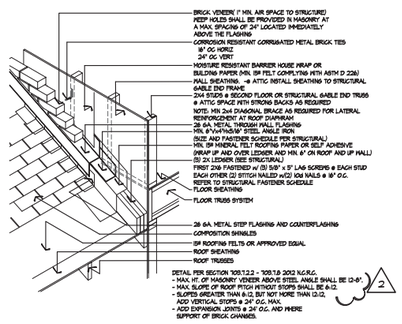

BRICK OVER ROOF 13

SCALE NTS SE-2D 150

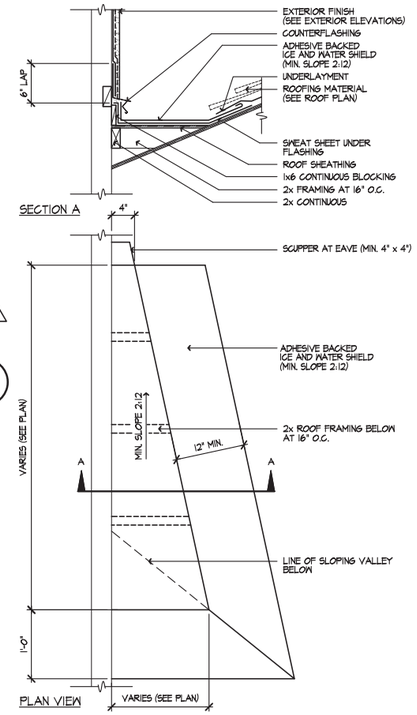

CRICKET 10

SCALE 1"=1'-0" 0732-10

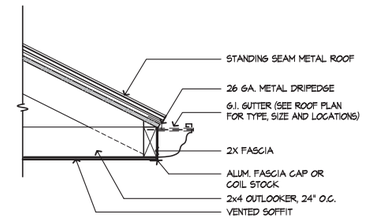

EAVE @ METAL ROOF 5

SCALE 1 1/2"=1'-0" SE-05097a

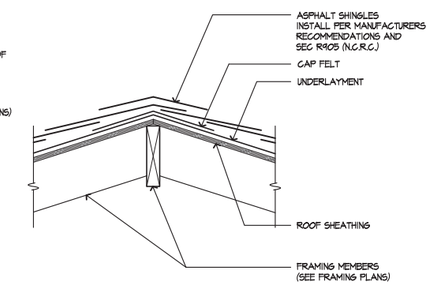

RIDGE 1

SCALE 1 1/2"=1'-0" SE-01001a

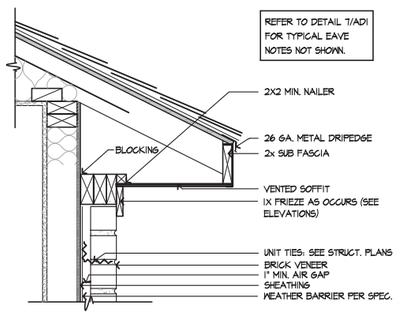

EAVE - BRICK 18

SCALE 1 1/2"=1'-0" SE-01018b

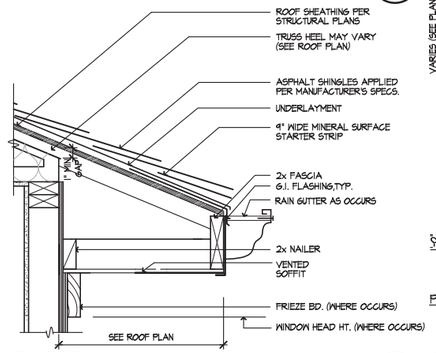

EAVE 14

SCALE 1 1/2"=1'-0" 0732-13a

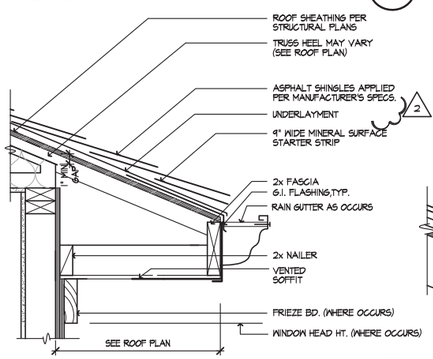

RAKE @ METAL ROOF 6

SCALE 1 1/2"=1'-0" SE-05098a

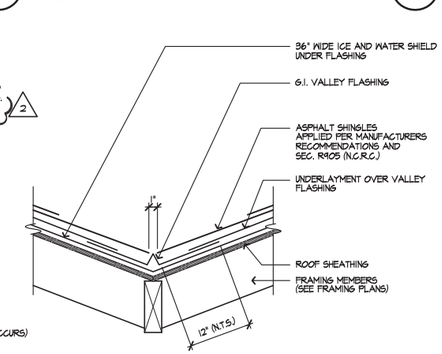

RIDGE VENT 2

SCALE 1 1/2"=1'-0" SE-01002a

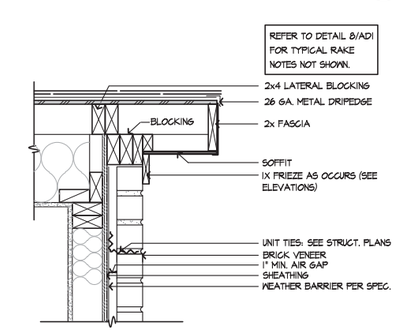

RAKE - BRICK 19

SCALE 1 1/2"=1'-0" SE-01019b

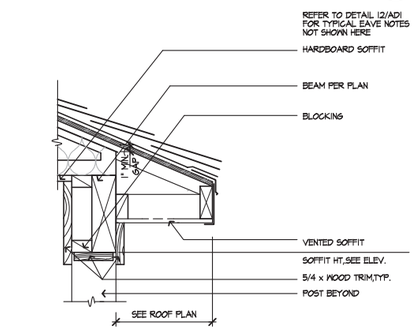

PORCH EAVE 15

SCALE 1 1/2"=1'-0" EVPRCH

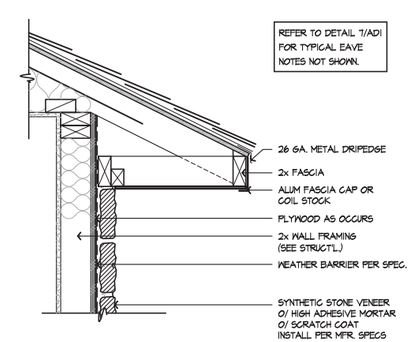

EAVE - STONE 11

SCALE 1 1/2"=1'-0" SE-01011a

EAVE 7

SCALE 1 1/2"=1'-0" 0732-13a

VALLEY 3

SCALE 1 1/2"=1'-0" SE-01003a

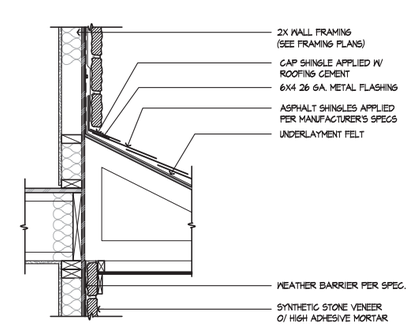

STONE TO ROOF 20

SCALE 1"=1'-0" SE-01020a

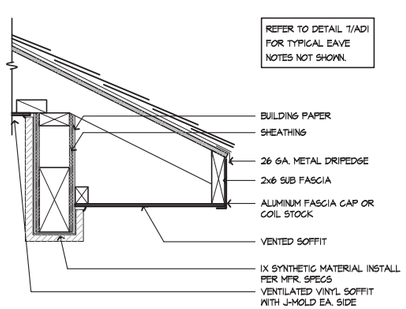

SOFFIT @ PORCH - SYNTHETIC MATERIAL 16

SCALE 1 1/2"=1'-0" SE-01016b

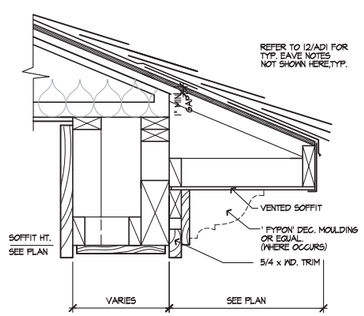

EAVE AT PORCH 12

SCALE 1 1/2"=1'-0" EVPRCH2

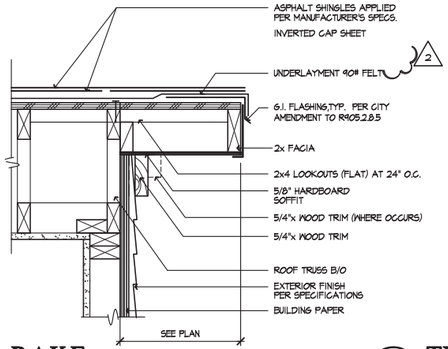

RAKE 8

SCALE 1 1/2"=1'-0" 0732-04a

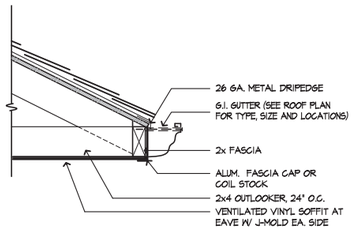

TYPICAL EAVE GUTTER 4

SCALE 1 1/2"=1'-0" SE-01004a

kb HOME

DETAILS

KB HOME
NORTH CAROLINA DIVISION

4518 S. MIAMI BLVD.
SUITE 180
DURHAM, NC 27703
TEL: (919) 768-7988
FAX: (919) 472-0582

ISSUE DATE:	09/28/11
PROJECT No.:	1350
DIVISION MGR.:	M.C.P.
REVISIONS:	01/15/20

1. COMPLIANCE REVIEW NC12008 - 02/28/12 - CTD
2. 2012 NC CODE UPDATE NC12016 - 03/22/12 - CTD
3. DETAIL UPDATES NC15053 - 11/3/15 - DCS
4. 2018 NC CODE UPDATE NC19015 - 01/24/19 - MCF
5. DETAIL UPDATE NC20001NCP - 01/15/20 - MCP

FOR INTERNAL USE ONLY
REVIEWED BY:
1. 2. 3. 4. 5. 6.

PLAN: ALL

SHEET: AD1

These designs and drawings are CONFIDENTIAL, and the exclusive property of KB Home Corporation and are not to be disclosed without the express permission of KB Home Corporation. They may not be used or duplicated without the express permission of KB Home Corporation. Copyright 2014 © KB Home Corporation, all rights reserved.

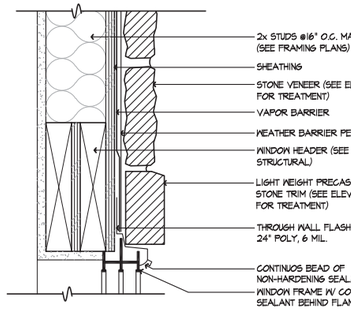

WINDOW HEAD - STONE

SCALE 3"=1'-0" SE-02036a 37

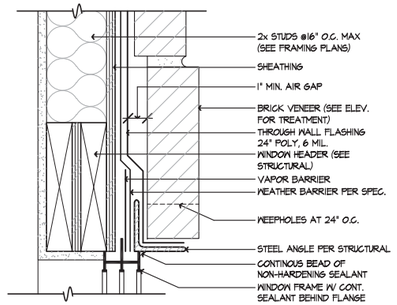

WINDOW HEAD - BRICK

SCALE 3"=1'-0" SE-02033a 33

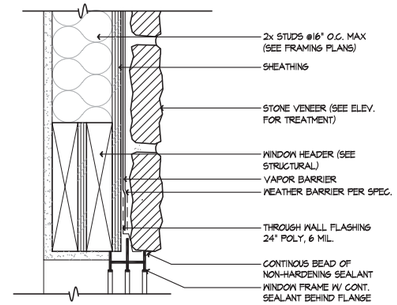

WINDOW HEAD - STONE

SCALE 3"=1'-0" SE-02029a 29

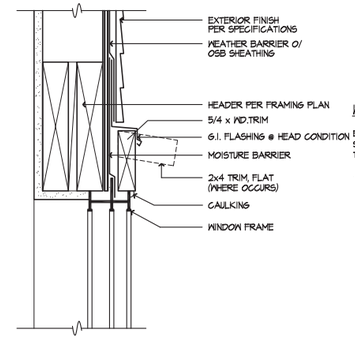

WINDOW HEAD

SCALE 3"=1'-0" 0850-01j 25

WINDOW FLASHING

EXTERIOR OPENINGS EXPOSED TO THE WEATHER SHALL BE FLASHED IN SUCH A MANNER AS TO MAKE THEM WATERPROOF.

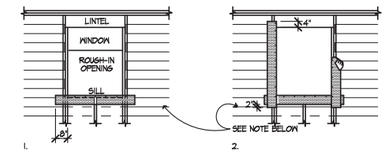

1. ATTACH SILL STRIP WITH TOP EDGE LEVEL WITH ROUGH SILL - EXTEND BEYOND EDGE OF ROUGH OPENING AT LEAST 8". SECURE ALL MOISTOP (OR EQUAL) WITH GALVANIZED NAILS OR POWER-DRIVEN STAPLES.

2. ATTACH JAMB STRIP WITH SIDE EDGE EVEN WITH ROUGH-JAMB FRAMING. START STRIP 1" BELOW LOWER EDGE OF SILL STRIP AND EXTEND 4" ABOVE LOWER EDGE OF LINTEL. OR POWER-DRIVEN STAPLES.

NOTE: LINE-WIRE, WHEN USED AS BACKING TO SUPPORT BUILDING PAPER BENEATH WIRE LATH (NETTING) FOR PORTLAND CEMENT PLASTER (STUCCO), SHALL BE INSTALLED AS FOLLOWS:

1. WIRE GUAGE, SPACING, AND ATTACHMENT SHALL BE IN ACCORDANCE WITH REQUIREMENTS OF BUILDING NEWS ITEMS 25-1.
2. PERIPHERAL FLASHING, AT ALL EDGES OF WALL OPENINGS, MUST COVER THE WIRE BACKING.
3. NO ATTACHMENT DEVICES NOR THE WIRE BACKING SHALL COVER OR PENETRATE THE FLASHING MATERIAL.

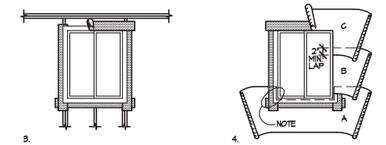

3. INSTALL WINDOW JAMB NAILING FLANGES OVER A CONTINUOUS BEAD OF SEALANT ON THE MOISTOP (OR EQUAL). INSTALL THE WINDOW HEAD MOISTOP (OR EQUAL) ON A CONTINUOUS BEAD OF SEALANT APPLIED TO THE WINDOW HEAD NAILING FLANGE.

4. COMMENCING AT THE BOTTOM (SOLE PLATE) OF THE WALL, LAY BUILDING PAPER UNDER SILL STRIP.

NOTE: CUT ANY EXCESS BUILDING PAPER THAT MAY EXTEND ABOVE THE SILL FLANGE LINE ON EACH SIDE OF (SHOWN AS SHORT DASHED LINES). DO NOT SLICE BUILDING PAPER HORIZONTALLY SO THAT THE PAPER WILL LAP OVER THE JAMB STRIPS. INSTALL SUCCESSIVE LINES OF BUILDING PAPER (B,C,D ETC.) OVER JAMB AND HEAD FLANGES, LAPPING EACH COURCE.

VAPOR BARRIER

SCALE 1/4"=1'-0" SE-02022a 22

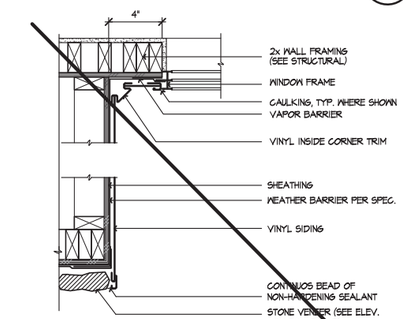

RECESSED WINDOW JAMB -STONE

SCALE 1 1/2"=1'-0" SE-02038a 38

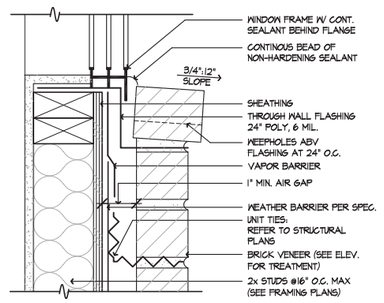

WINDOW SILL - BRICK

SCALE 3"=1'-0" SE-02034a 34

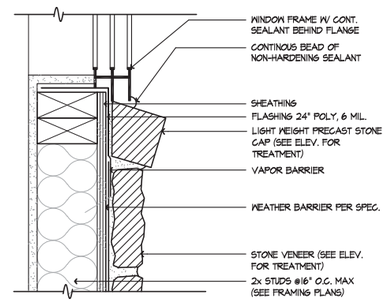

WINDOW SILL - STONE

SCALE 3"=1'-0" SE-02030a 30

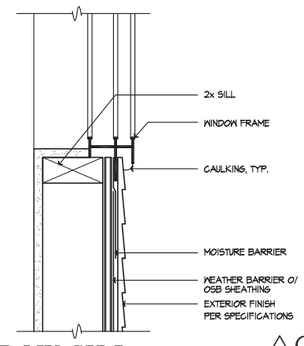

WINDOW SILL

SCALE 3"=1'-0" 0850-111 26

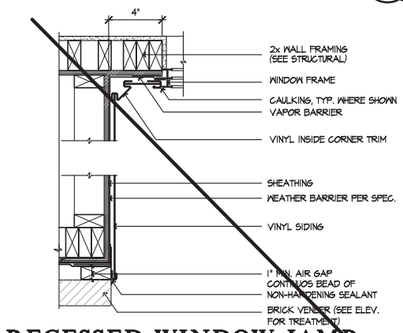

RECESSED WINDOW JAMB -BRICK

SCALE 1 1/2"=1'-0" SE-02039a 39

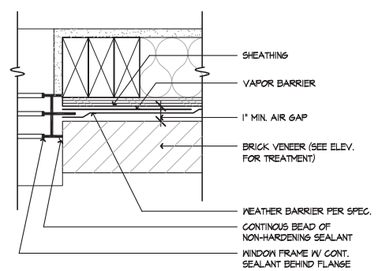

WINDOW JAMB - BRICK

SCALE 3"=1'-0" SE-02035a 35

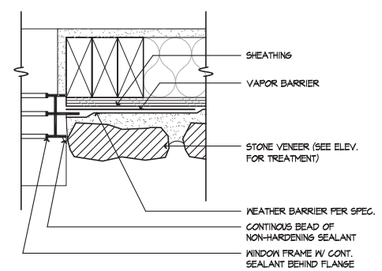

WINDOW JAMB - STONE

SCALE 3"=1'-0" SE-02031a 31

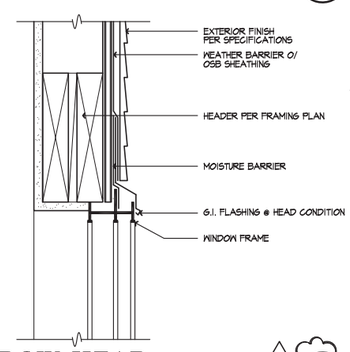

WINDOW HEAD

SCALE 3"=1'-0" 0850-15 27

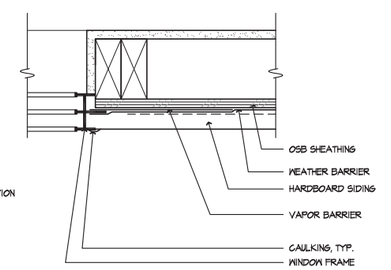

WINDOW JAMB

SCALE 3"=1'-0" 0850-02s 23

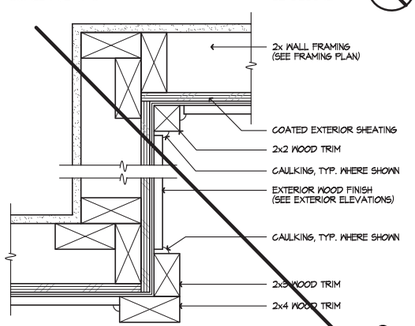

SIDING - CORNER. TRIM

SCALE 3"=1'-0" 0746-02 40

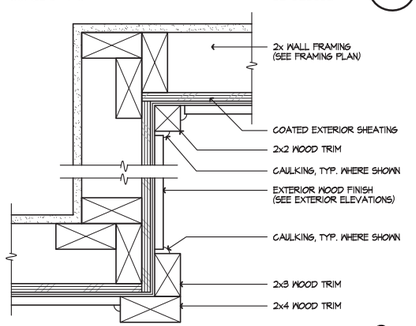

SIDING - CORNER. TRIM

SCALE 3"=1'-0" 0746-02 36

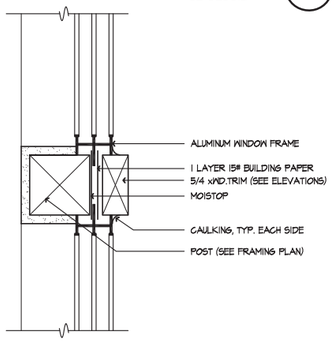

VERT. WINDOW MULL.

SCALE 3"=1'-0" 0850-04a 32

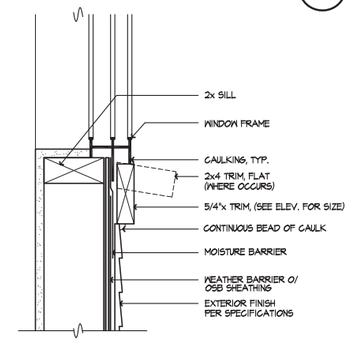

WINDOW SILL

SCALE 3"=1'-0" 0850-02s 28

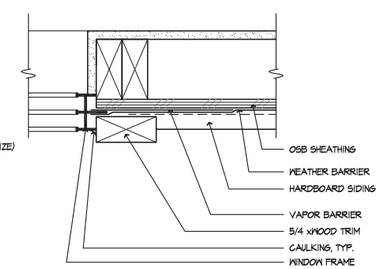

WINDOW JAMB

SCALE 3"=1'-0" 0850-02s 24

kb HOME

DETAILS

KB HOME
NORTH CAROLINA DIVISION

4518 S. MIAMI BLVD.
SUITE 180
DURHAM, NC 27703
TEL: (919) 768-7988
FAX: (919) 472-0582

ISSUE DATE: 09/28/11
PROJECT No.: 1350
DIVISION MGR.: M.C.P.
REVISIONS: 01/15/20

1. COMPLIANCE REVIEW NC12008 - 02/28/12 - CTD
2. 2012 NC CODE UPDATE NC12016 - 03/22/12 - CTD
3. DETAIL UPDATES NC15053 - 11/3/15 - DCS
4. 2018 NC CODE UPDATE NC19015 - 01/24/19 - MCP
5. DETAIL UPDATE NC20001NCP - 01/15/20 - MCP

FOR INTERNAL USE ONLY
REVIEWED BY:
1. 2. 3. 4. 5. 6.

PLAN: ALL
SHEET: AD2

These designs and drawings are CONFIDENTIAL, and the exclusive property of KB Home Corporation and are not to be disclosed without the express permission of KB Home Corporation. They may not be used or duplicated without the express permission of KB Home Corporation. Copyright 2014 © KB Home Corporation, all rights reserved.

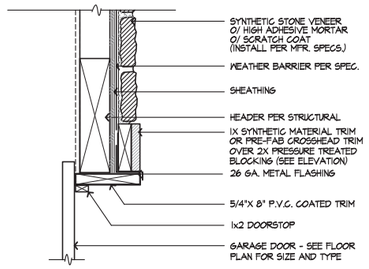

GARAGE DOOR HEAD - STONE

SCALE 1 1/2"=1'-0" SE-03057b **57**

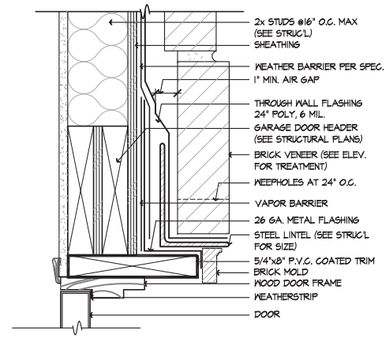

DOOR HEAD - BRICK

SCALE 3"=1'-0" SE-03053a **53**

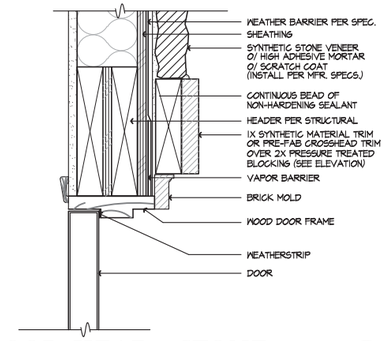

DOOR HEAD - STONE

SCALE 3"=1'-0" SE-03049a **49**

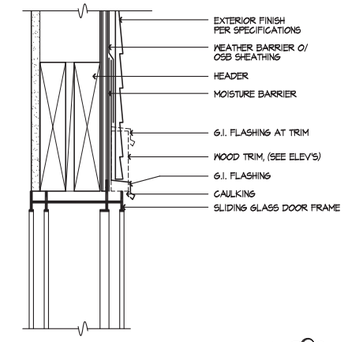

SLIDING DR. HEAD

SCALE 3"=1'-0" 0840-03b **45**

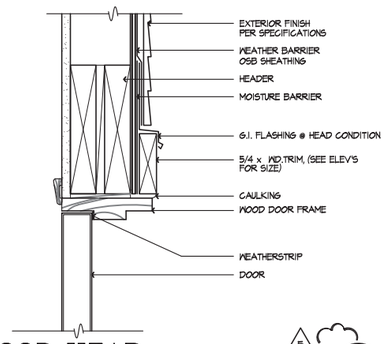

DOOR HEAD

SCALE 3"=1'-0" 0840-01b **41**

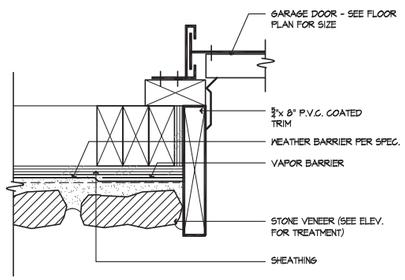

GARAGE DOOR JAMB - STONE

SCALE 3"=1'-0" SE-03058b **58**

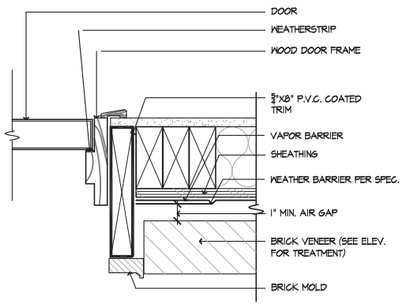

DOOR JAMB - BRICK

SCALE 3"=1'-0" SE-03054a **54**

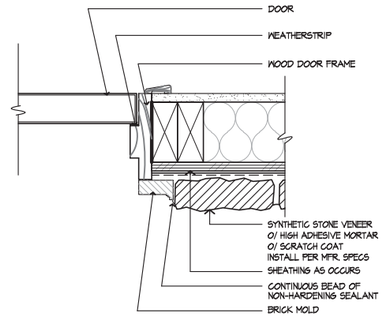

DOOR JAMB - STONE

SCALE 3"=1'-0" SE-03050a **50**

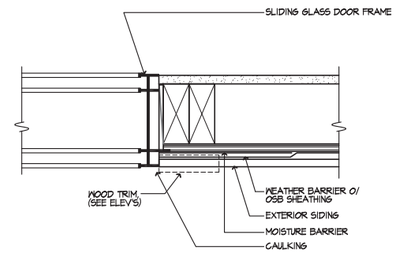

SLIDING DOOR JAMB

SCALE 3"=1'-0" 0840-03c **46**

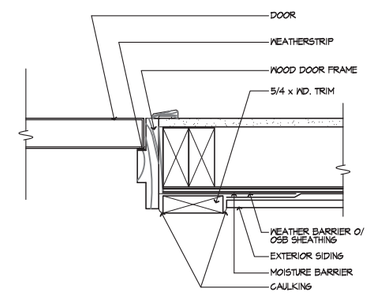

DOOR JAMB

SCALE 3"=1'-0" 0840-01c **42**

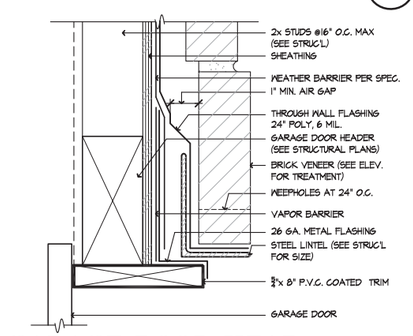

GARAGE DOOR HEAD - BRICK

SCALE 3"=1'-0" SE-03058a **59**

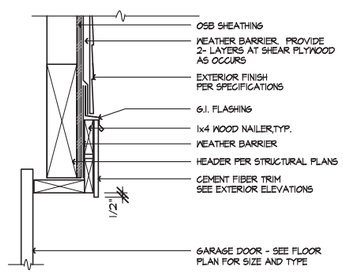

GARAGE DOOR HEAD

SCALE 1 1/2"=1'-0" 0420-39c **55**

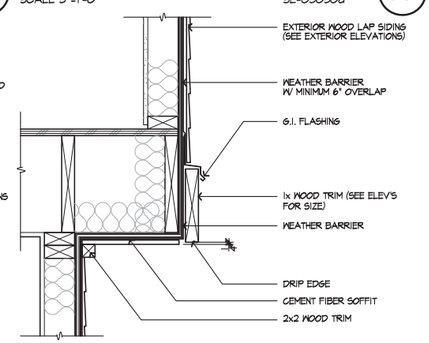

TRIM @ CANTILEVER

SCALE 1 1/2"=1'-0" 09CANTMP **51**

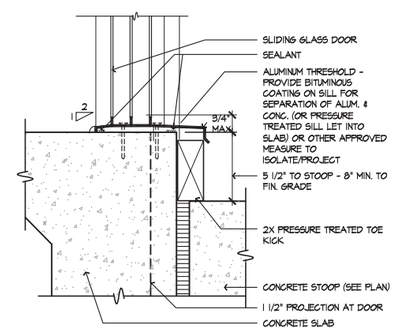

SLDG. DOOR THRESHOLD

SCALE 3"=1'-0" SE-03047a **47**

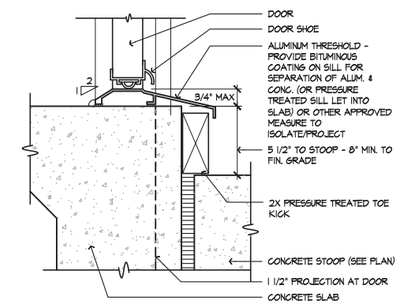

SWING DOOR THRESHOLD

SCALE 3"=1'-0" SE-03043a **43**

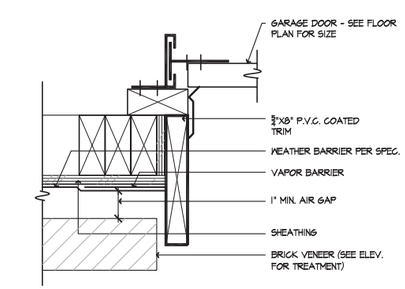

GARAGE DOOR JAMB - BRICK

SCALE 3"=1'-0" SE-03060a **60**

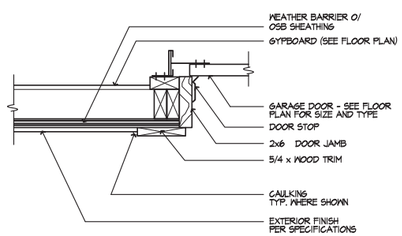

GARAGE DOOR JAMB

SCALE 1 1/2"=1'-0" 0745-01 **56**

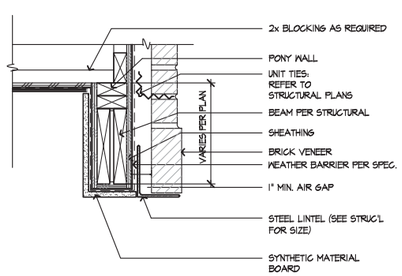

SOFFIT @ PORCH - BRICK

SCALE 1 1/2"=1'-0" SE-03052c **52**

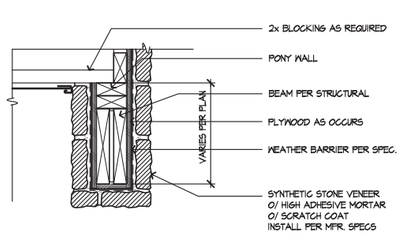

SOFFIT @ PORCH - STONE

SCALE 1 1/2"=1'-0" RA-01026a **48**

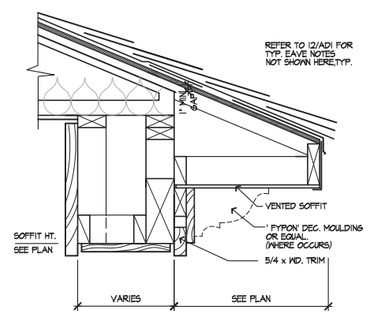

EAVE AT PORCH

SCALE 1 1/2"=1'-0" EVPRCH2 **44**

kb HOME

DETAILS

KB HOME
NORTH CAROLINA DIVISION

4518 S. MIAMI BLVD.
SUITE 180
DURHAM, NC 27703
TEL: (919) 768-7988
FAX: (919) 472-0582

ISSUE DATE: 09/28/11
PROJECT No.: 1350
DIVISION MGR.: M.C.P.
REVISIONS: 01/15/20

1. COMPLIANCE REVIEW NC12008 - 02/28/12 - CTD
2. 2012 NC CODE UPDATE NC12016 - 03/22/12 - CTD
3. DETAIL UPDATES NC15053 - 11/3/15 - DCS
4. 2018 NC CODE UPDATE NC19015 - 01/24/19 - MCP
5. DETAIL UPDATE NC20001NCP - 01/15/20 - MCP

FOR INTERNAL USE ONLY
REVIEWED BY:
1.
2.
3.
4.
5.
6.

PLAN: ALL

SHEET: AD3

These designs and drawings are CONFIDENTIAL, and the exclusive property of KB Home Corporation and are not to be disclosed without the express permission of KB Home Corporation. They may not be used or duplicated without the express permission of KB Home Corporation. Copyright 2014 © KB Home Corporation, all rights reserved.

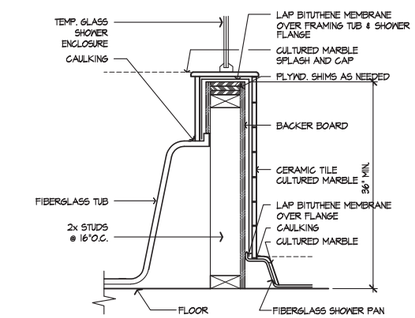

TUB/SHOWER WALL 77

SCALE 1 1/2"=1'-0" SE-04077a

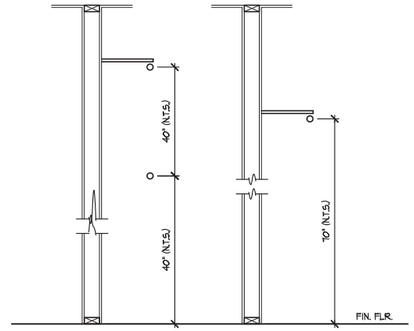

DBL./SGL. POLE & SHELF 73

SCALE 3/4"=1'-0" SE-04073a

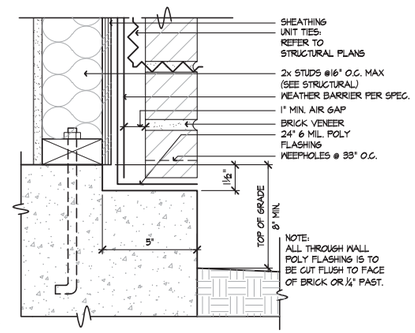

BRICK LEDGE AT SLAB 69

SCALE 3"=1'-0" SE-04069a

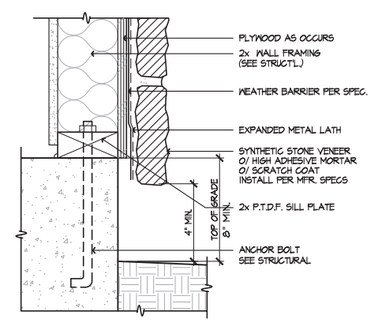

SYN. STONE SCREED 65

SCALE 3"=1'-0" SE-04065a

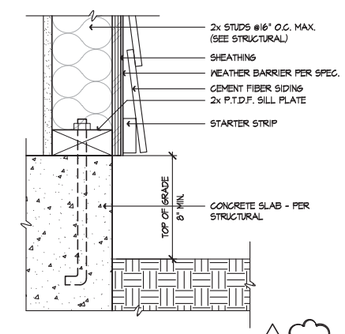

SIDING AT SLAB 61

SCALE 3"=1'-0" SE-04061a

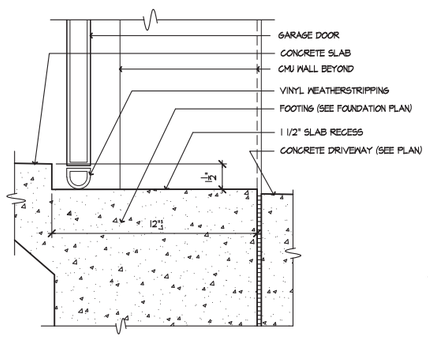

GARAGE SLAB RECESS 78

SCALE 1 1/2"=1'-0" 0810-01

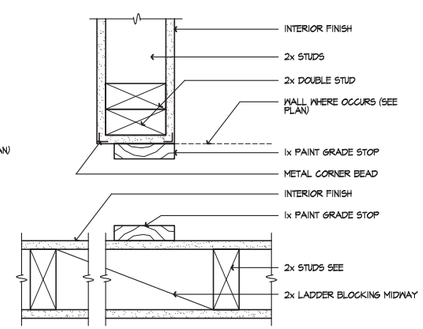

WARDROBE DOOR JAMB 74

SCALE 3"=1'-0" SE-04074a

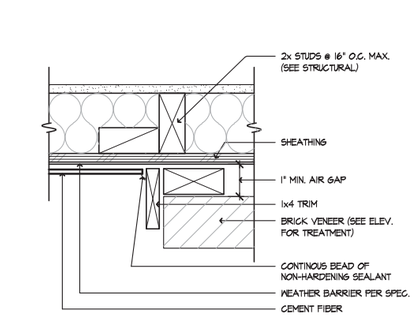

SIDING TO BRICK 70

SCALE 3"=1'-0" SE-04070a

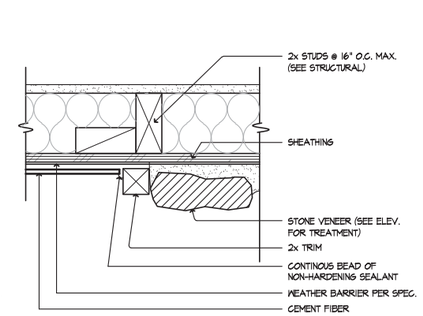

SIDING TO STONE 66

SCALE 3"=1'-0" SE-04066a

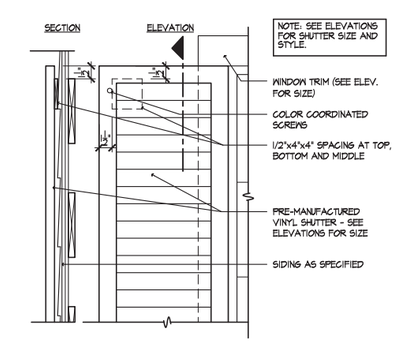

WINDOW SHUTTER 62

SCALE 1 1/2"=1'-0" SE-04062a

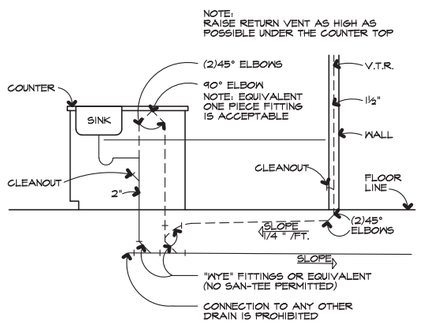

KITCHEN ISLAND 79

SCALE 1/2"=1'-0" SE-04079a

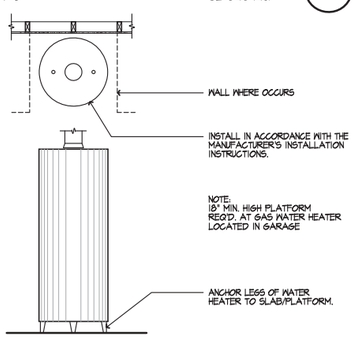

WATER HEATER 75

SCALE 1/2"=1'-0" SE-04075a

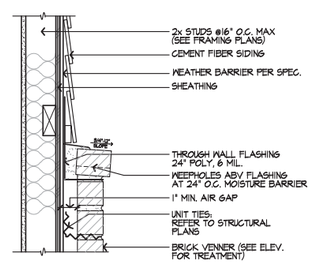

BRICK CAP @ SIDING 71

SCALE 1 1/2"=1'-0" SE-04071a

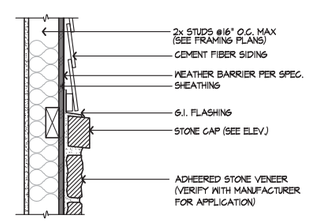

STONE CAP @ SIDING 67

SCALE 1 1/2"=1'-0" SE-04067a

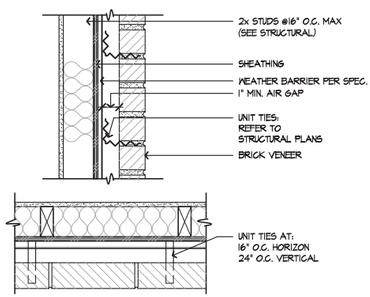

BRICK TIES 63

SCALE 1 1/2"=1'-0" SE-04063a

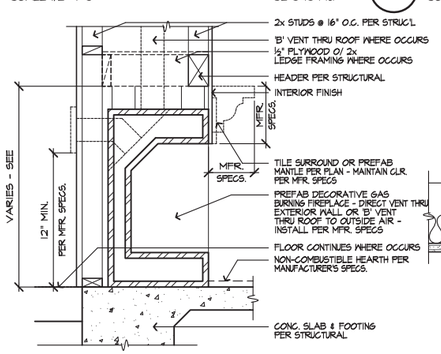

DECORATIVE GAS APPLIANCE 80

SCALE 1"=1'-0" SE-04080a

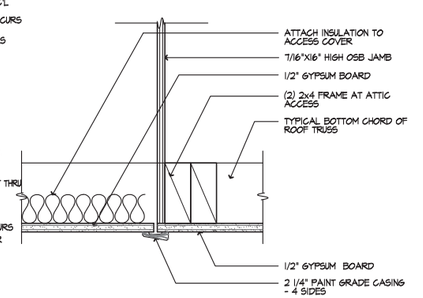

ATTIC ACCESS 76

SCALE 3"=1'-0" SE-04076b

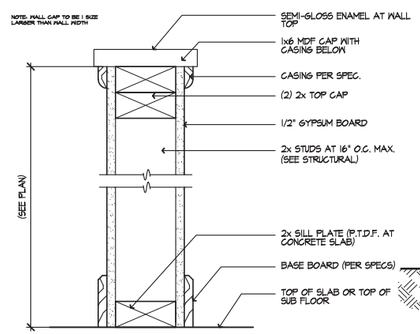

PONY WALL 72

SCALE 3"=1'-0" SE-04072a

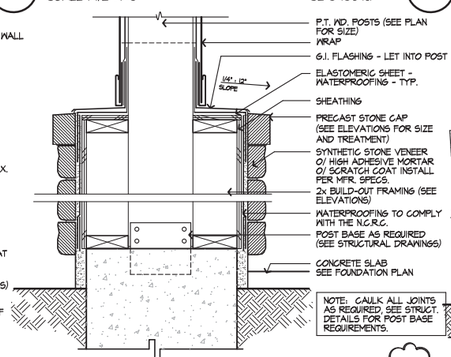

COLUMN BASE W/ STONE 68

SCALE 1 1/2"=1'-0" SE-04068a

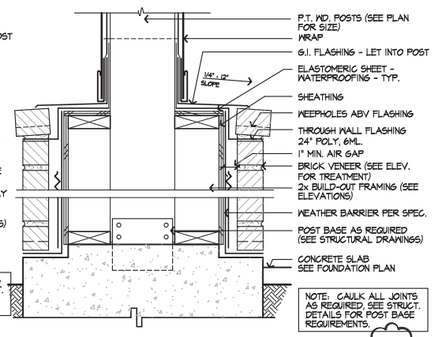

COLUMN BASE W/ BRICK 64

SCALE 1 1/2"=1'-0" SE-04064a

kb HOME

DETAILS

KB HOME
NORTH CAROLINA DIVISION

4518 S. MIAMI BLVD.
SUITE 180
DURHAM, NC 27703
TEL: (919) 768-7988
FAX: (919) 472-0582

ISSUE DATE: 09/28/11
PROJECT No.: 1350
DIVISION MGR.: M.C.P.
REVISIONS: 01/15/20

1. COMPLIANCE REVIEW NC12008 - 02/28/12 - CTD
2. 2012 NC CODE UPDATE NC12016 - 03/22/12 - CTD
3. DETAIL UPDATES NC15053 - 11/3/15 - DCS
4. 2018 NC CODE UPDATE NC19015 - 01/24/19 - MCP
5. DETAIL UPDATE NC20001NCP - 01/15/20 - MCP

FOR INTERNAL USE ONLY
REVIEWED BY:
1. 2. 3. 4. 5. 6.

PLAN: ALL

SHEET: AD4

These designs and drawings are CONFIDENTIAL, and the exclusive property of KB Home Corporation and are not to be disclosed without the express permission of KB Home Corporation. They may not be used or duplicated without the express permission of KB Home Corporation. Copyright 2014 © KB Home Corporation, all rights reserved.

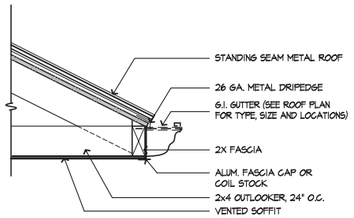

EAVE @ METAL ROOF 97

SCALE 1 1/2"=1'-0" SE-05097a

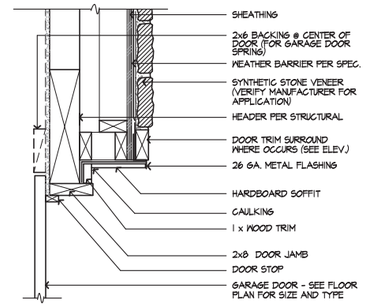

GARAGE DOOR HEAD -STONE 93

SCALE 1 1/2"=1'-0" SE-05093a

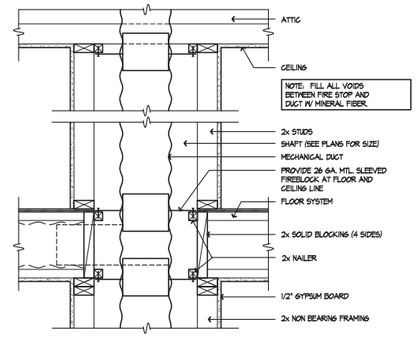

TYP. SHAFT AT 2nd FLR. 89

SCALE 1"=1'-0" SE-05089a

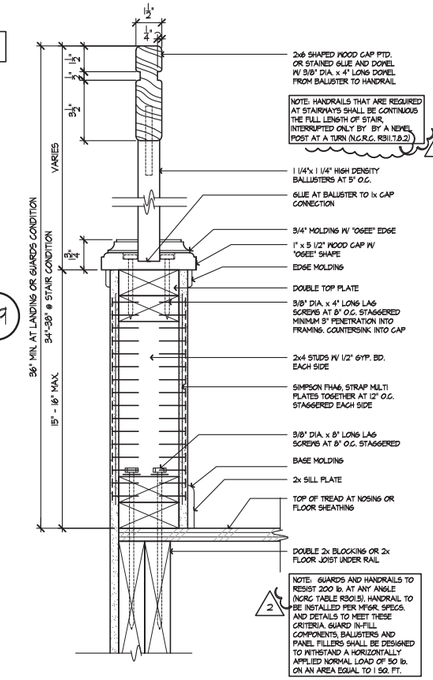

GUARDRAIL 86

SCALE 3"=1'-0" SE-05086a

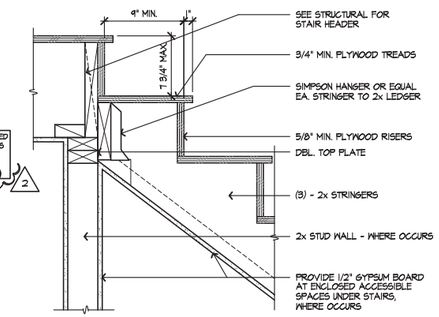

STAIR AT LANDING 81

SCALE 1 1/2"=1'-0" SE-05081a

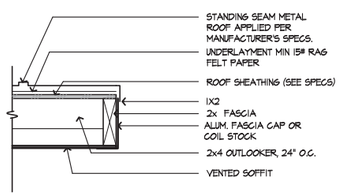

RAKE @ METAL ROOF 98

SCALE 1 1/2"=1'-0" SE-05098a

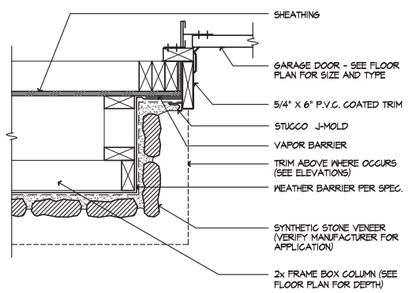

GARAGE DOOR JAMB - STONE 94

SCALE 1 1/2"=1'-0" SE-05094a

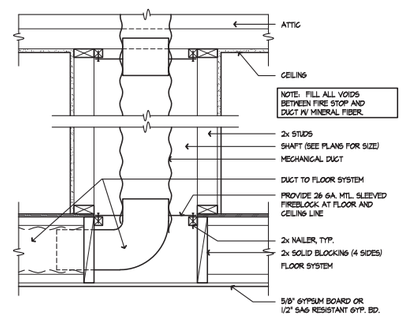

TYP. SHAFT AT 2nd FLR. 90

SCALE 1"=1'-0" SE-05090a

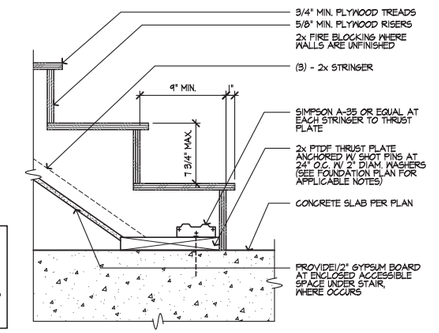

STAIR AT CONC. FLOOR 82

SCALE 1 1/2"=1'-0" SE-05082a

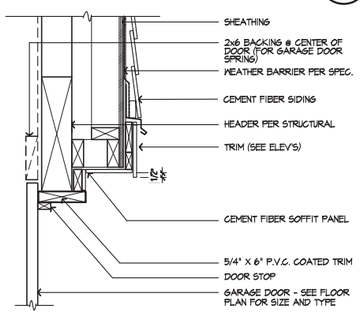

GARAGE DOOR HEAD 99

SCALE 1 1/2"=1'-0" SE-05099a 5

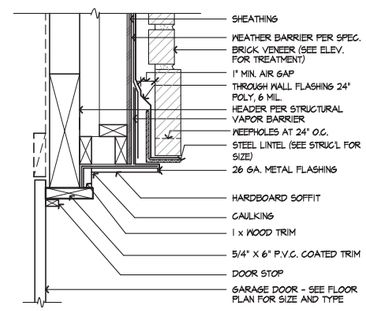

GARAGE DOOR HEAD -BRICK 95

SCALE 1 1/2"=1'-0" SE-05095a

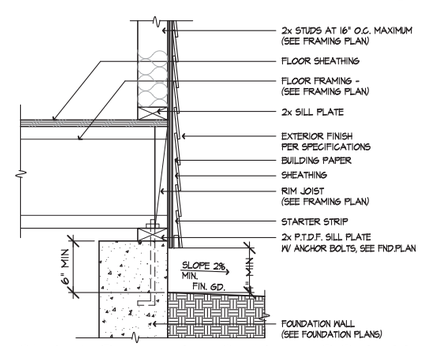

SIDING AT RAISED FLOOR 91

SCALE 1 1/2"=1'-0" AD5-91B

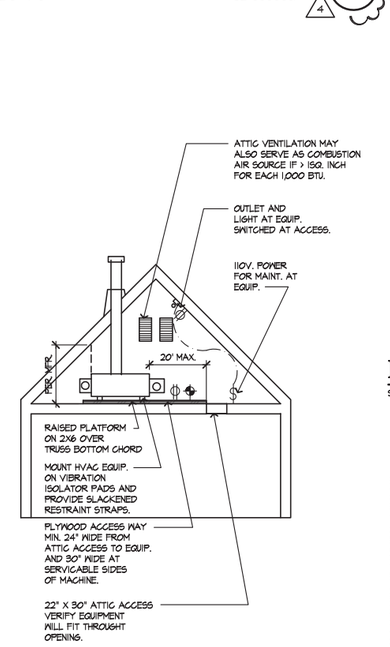

HANDRAIL AT WALL 83

SCALE 3"=1'-0" SE-05083a 4

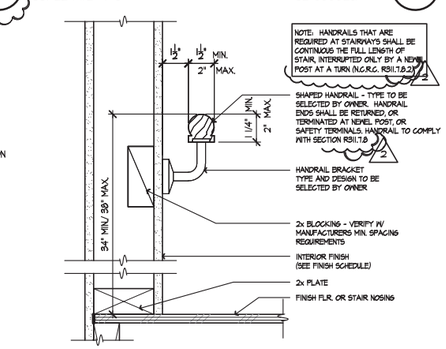

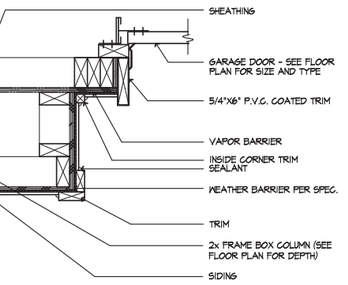

GARAGE DOOR JAMB 100

SCALE 1 1/2"=1'-0" SE-05100a 5

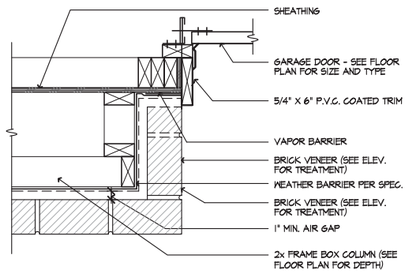

GARAGE DOOR JAMB - BRICK 96

SCALE 1 1/2"=1'-0" SE-05096a

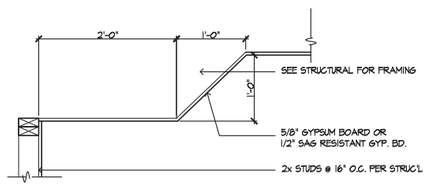

TRAY CEILING 92

SCALE 1"=1'-0" SE-05092a

F.A.U. IN ATTIC 88

SCALE 1 1/2"=1'-0" SE-05088-a

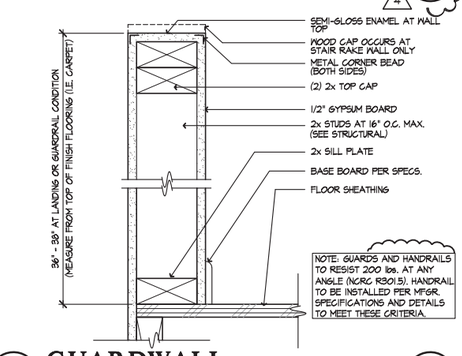

GUARDWALL 84

SCALE 3"=1'-0" SE-05084a 4

kb HOME

DETAILS

KB HOME
NORTH CAROLINA DIVISION

4518 S. MIAMI BLVD.
SUITE 180
DURHAM, NC 27703
TEL: (919) 768-7988
FAX: (919) 472-0582

ISSUE DATE: 09/28/11
PROJECT No.: 1350
DIVISION MGR.: M.C.P.
REVISIONS: 01/15/20

1 COMPLIANCE REVIEW NC12008 - 02/28/12 - CTD
2 2012 NC CODE UPDATE NC12016 - 03/22/12 - CTD
3 DETAIL UPDATES NC15053 - 11/3/15 - DCS
4 2018 NC CODE UPDATE NC19015 - 01/24/19 - MCP
5 DETAIL UPDATE NC20001NCP - 01/15/20 - MCP

FOR INTERNAL USE ONLY
REVIEWED BY:
1. ____ ____
2. ____ ____
3. ____ ____
4. ____ ____
5. ____ ____
6. ____ ____

PLAN: ALL
SHEET: AD5

These designs and drawings are CONFIDENTIAL, and the exclusive property of KB Home Corporation and are not to be disclosed without the express permission of KB Home Corporation. They may not be used or duplicated without the express permission of KB Home Corporation. Copyright 2014 © KB Home Corporation, all rights reserved.

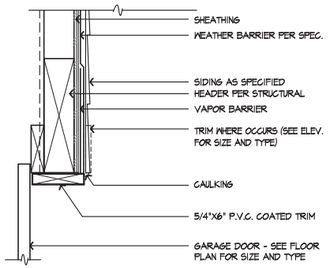

GARAGE DOOR HEAD -SIDING

SCALE 1 1/2"=1'-0" SE-06117a 117

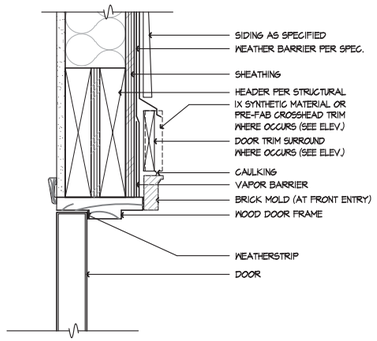

DOOR HEAD - SIDING

SCALE 3"=1'-0" SE-06113a 113

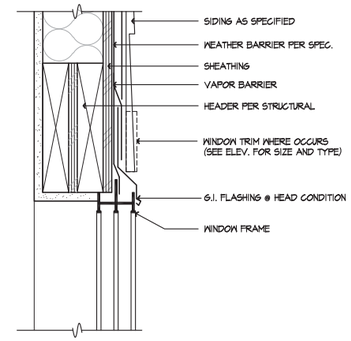

WINDOW HEAD - SIDING

SCALE 3"=1'-0" SE-06109a 109

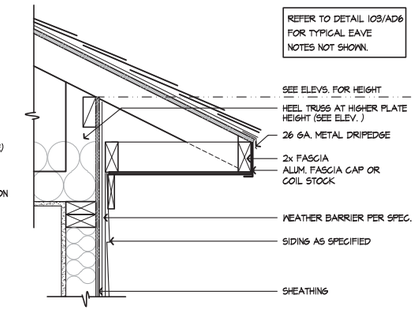

HEEL TRUSS -SIDING

SCALE 1 1/2"=1'-0" SE-06105a 5 105

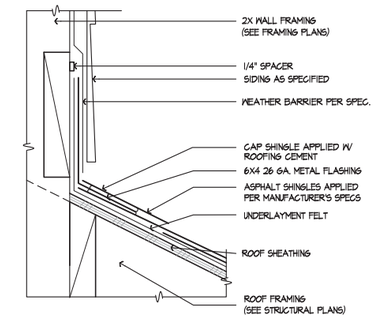

ROOF TO WALL

SCALE 3" = 1'-0" SE-06101a 101

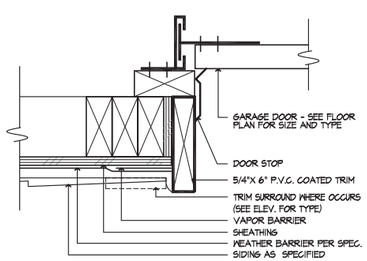

GARAGE DOOR JAMB - SIDING

SCALE 3"=1'-0" SE-06118a 118

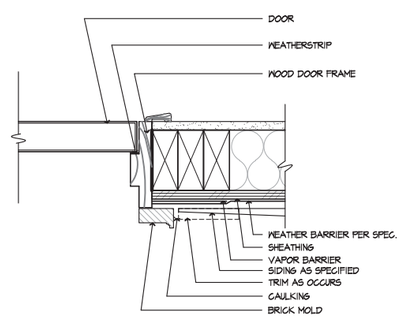

DOOR JAMB - SIDING

SCALE 3"=1'-0" SE-06114a 114

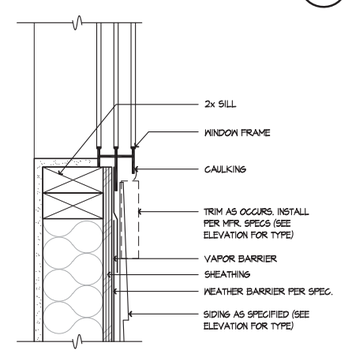

WINDOW SILL - SIDING

SCALE 3"=1'-0" SE-06110a 110

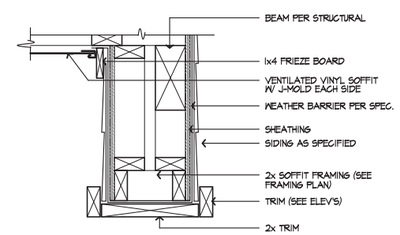

SOFFIT @ PORCH

SCALE 1 1/2"=1'-0" SE-06106a 106

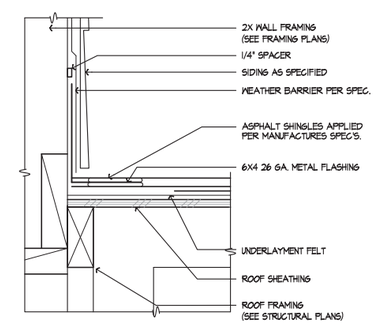

ROOF TO WALL

SCALE 3"=1'-0" SE-06102a 102

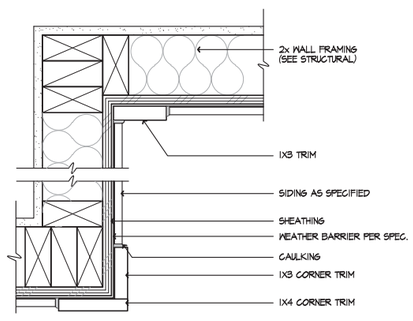

CORNER TRIM - SIDING

SCALE 3"=1'-0" SE-06119a 119

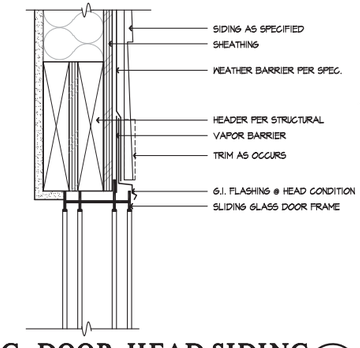

SLDG. DOOR HEAD-SIDING

SCALE 3"=1'-0" SE-06115a 115

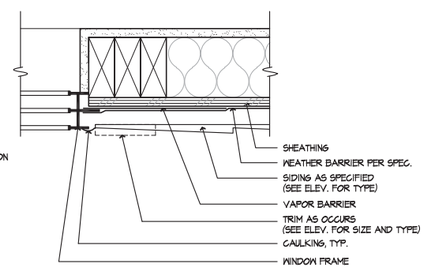

WINDOW JAMB - SIDING

SCALE 3"=1'-0" SE-06111a 111

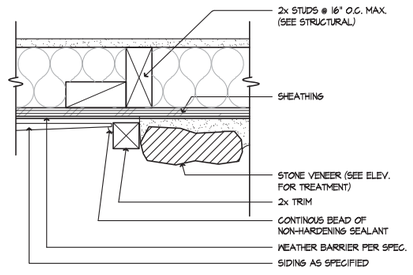

SIDING TO STONE

SCALE 3"=1'-0" SE-06107a 107

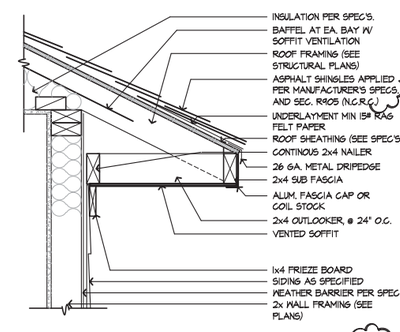

EAVE

SCALE 1 1/2"=1'-0" SE-01009tb 5 103

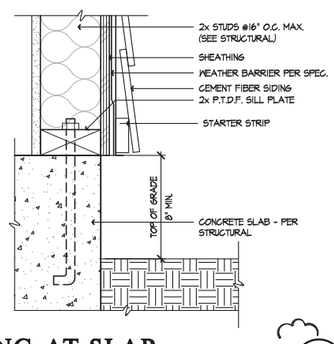

SIDING AT SLAB

SCALE 3"=1'-0" SE-06120a 5 120

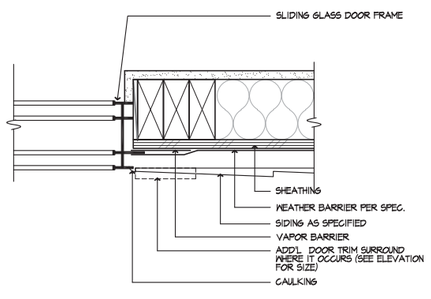

SLDG. DOOR JAMB-SIDING

SCALE 3"=1'-0" SE-06116a 116

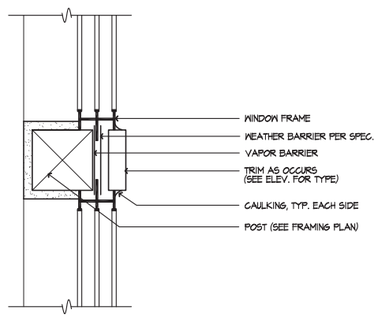

VERT. WDW. MULL.-SIDING

SCALE 3"=1'-0" SE-06112a 112

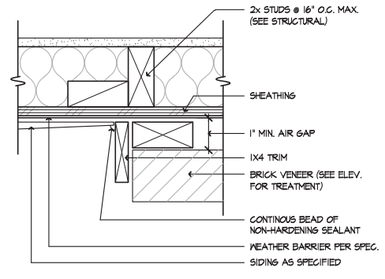

SIDING TO BRICK

SCALE 3"=1'-0" SE-06108a 108

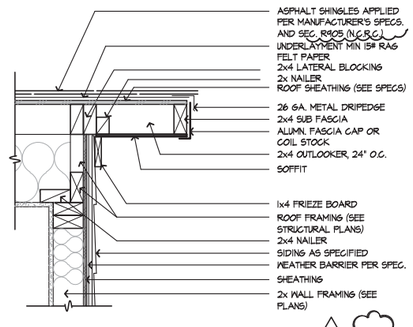

RAKE

SCALE 1 1/2"=1'-0" SE-06104a 5 4 104

kb HOME

DETAILS

KB HOME
NORTH CAROLINA DIVISION

4518 S. MIAMI BLVD.
SUITE 180
DURHAM, NC 27703
TEL: (919) 768-7988
FAX: (919) 472-0582

ISSUE DATE:	09/28/11
PROJECT No.:	1350
DIVISION MGR.:	M.C.P.
REVISIONS:	01/15/20

1. COMPLIANCE REVIEW NC12008 - 02/28/12 - CTD
2. 2012 NC CODE UPDATE NC12016 - 03/22/12 - CTD
3. DETAIL UPDATES NC15053 - 11/3/15 - DCS
4. 2018 NC CODE UPDATE NC19015 - 01/24/19 - MCP
5. DETAIL UPDATE NC20001NCP - 01/15/20 - MCP

FOR INTERNAL USE ONLY
REVIEWED BY:
1.
2.
3.
4.
5.
6.

PLAN: ALL

SHEET: AD6

These designs and drawings are CONFIDENTIAL, and the exclusive property of KB Home Corporation and are not to be disclosed without the express permission of KB Home Corporation. They may not be used or duplicated without the express permission of KB Home Corporation. Copyright 2014 © KB Home Corporation, all rights reserved.

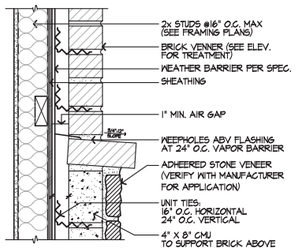

BRICK OVER STONE

NOT TO SCALE

129 AD7

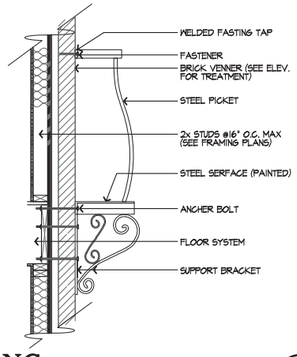

RAILING

NOT TO SCALE

130 AD7

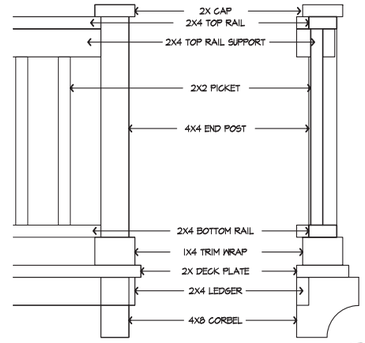

WOOD RAILING

NOT TO SCALE

131 AD7

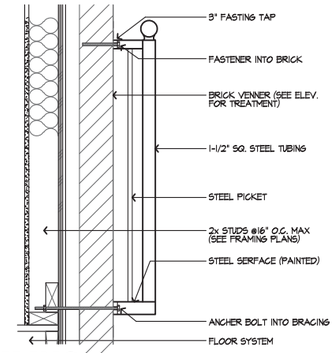

RAILING

NOT TO SCALE

132 AD7

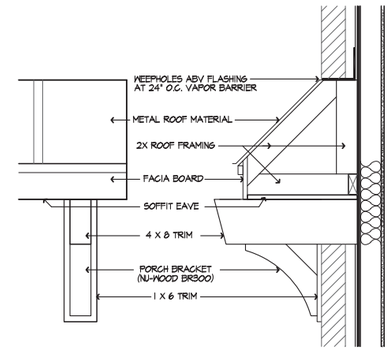

SHED ROOF

NOT TO SCALE

133 AD7

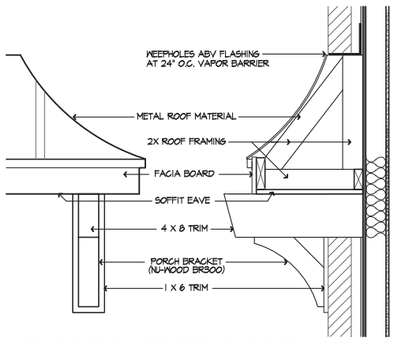

CURVED SHED ROOF

NOT TO SCALE

134 AD7

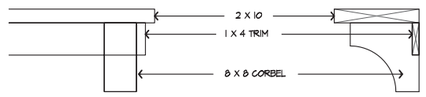

WINDOW LEDGE

NOT TO SCALE

136 AD7

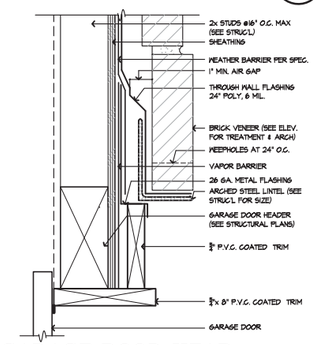

GARAGE DOOR HEAD W/ ARCHED BRICK

NOT TO SCALE

138 AD7

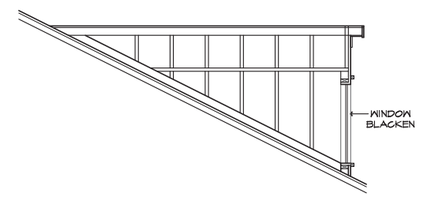

TYP. DORMER

NOT TO SCALE

137 AD7

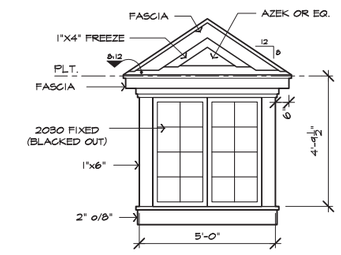

EYEBROW DORMER

NOT TO SCALE

139 AD7

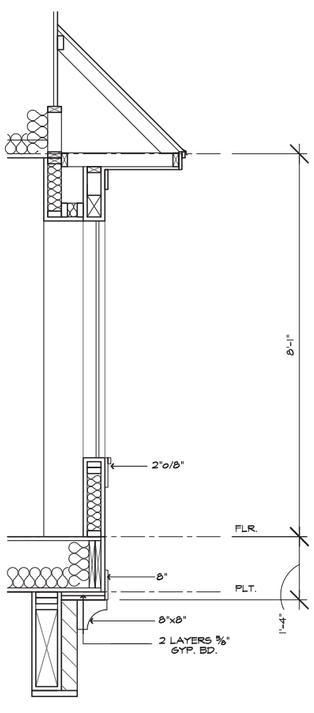

BAY

NOT TO SCALE

135 AD7

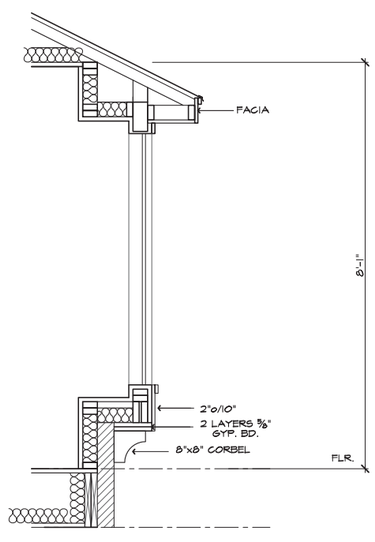

BAY (2)

NOT TO SCALE

144 AD7

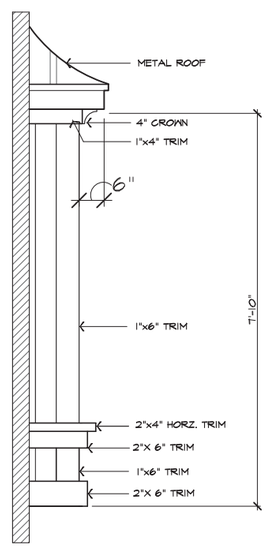

BAY (2)

NOT TO SCALE

145 AD7

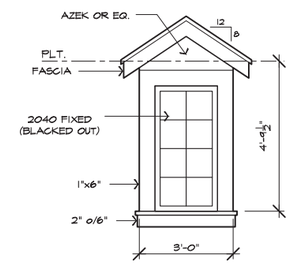

GABLE ROOF DORMER

NOT TO SCALE

140 AD7

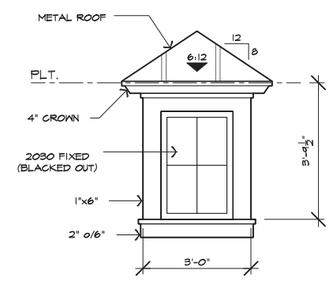

TYP. HIP DORMER

NOT TO SCALE

141 AD7

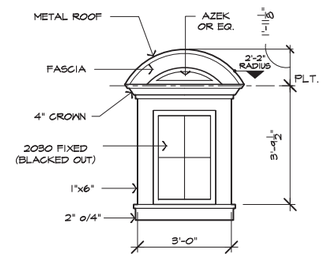

ARCHED ROOF DORMER

NOT TO SCALE

142 AD7

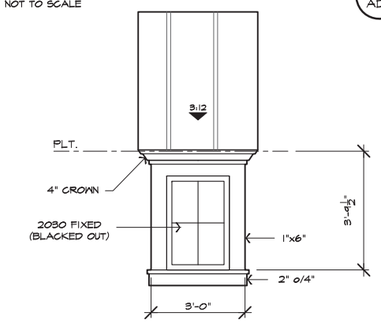

TYP. SHED ROOF DORMER

NOT TO SCALE

143 AD7

kb HOME

DETAILS

KB HOME
NORTH CAROLINA DIVISION

4518 S. MIAMI BLVD.
SUITE 180
DURHAM, NC 27703
TEL: (919) 768-7988
FAX: (919) 472-0582

ISSUE DATE: 09/28/11
PROJECT No.: 1350
DIVISION MGR.: M.C.P.
REVISIONS: 01/15/20

1. COMPLIANCE REVIEW NC12008 - 02/28/12 - CTD
2. 2012 NC CODE UPDATE NC12016 - 03/22/12 - CTD
3. DETAIL UPDATES NC15053 - 11/3/15 - DCS
4. 2018 NC CODE UPDATE NC19015 - 01/24/19 - MCP
5. DETAIL UPDATE NC20001NCP - 01/15/20 - MCP

FOR INTERNAL USE ONLY
REVIEWED BY:
1.
2.
3.
4.
5.
6.

PLAN: ALL

SHEET: AD7

These designs and drawings are CONFIDENTIAL, and the exclusive property of KB Home Corporation. They may not be used or duplicated without the express permission of KB Home Corporation. Copyright 2014 © KB Home Corporation, all rights reserved.

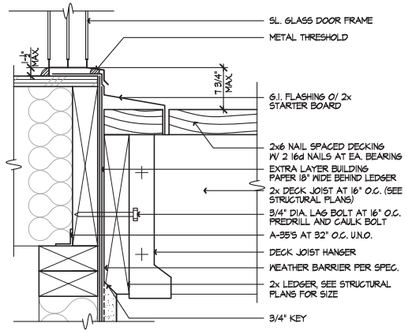

SL. DR. TRESHOLD @ DECK

154 AD8

SCALE 3"=1'-0" 0810-02

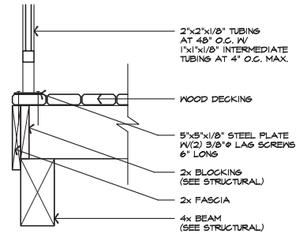

DECK FRAMING

150 AD8

SCALE 1"=1'-0"

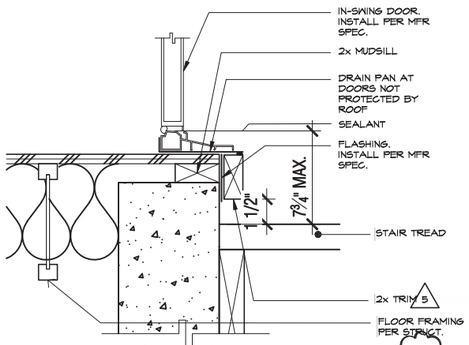

SWING DOOR THRESHOLD

156 AD8

SCALE 3"=1'-0" AT CRAWL SPACE

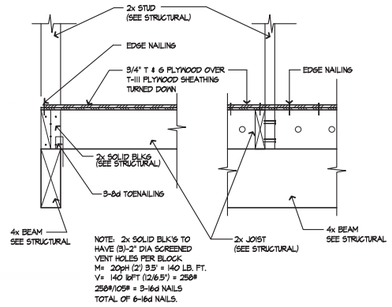

DECK FRAMING

151 AD8

SCALE 1"=1'-0"

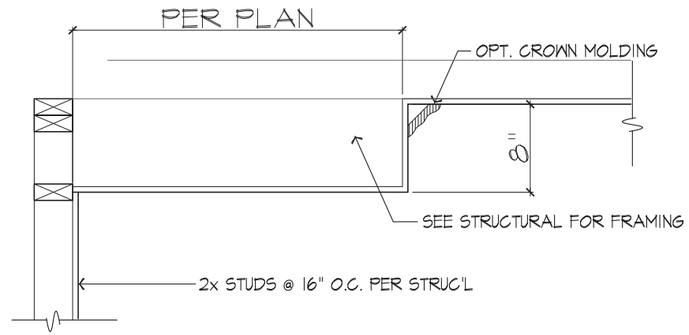

BOX TRAY CEILING

148 AD8

NOT TO SCALE

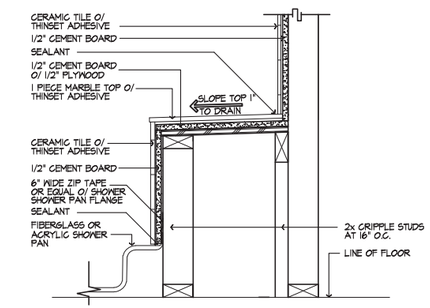

SHOWER PAN SEAT

146 AD8

SCALE 1 1/2"=1'-0" BA-001A

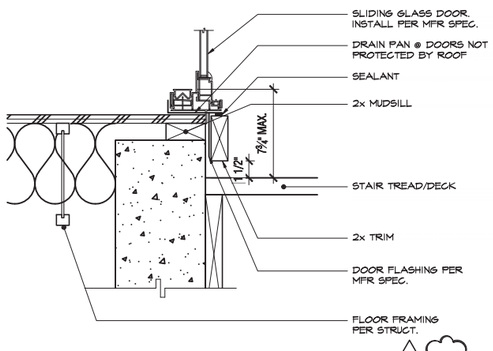

SLIDING GLASS DOOR 5

157 AD8

SCALE 1"=1'-0" AT CRAWL SPACE

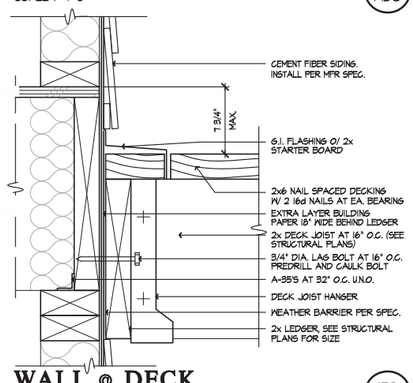

WALL @ DECK

152 AD8

SCALE 3"=1'-0" AD8-152

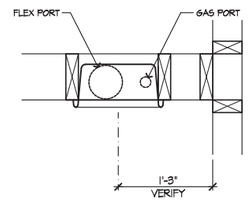

PLAN VIEW

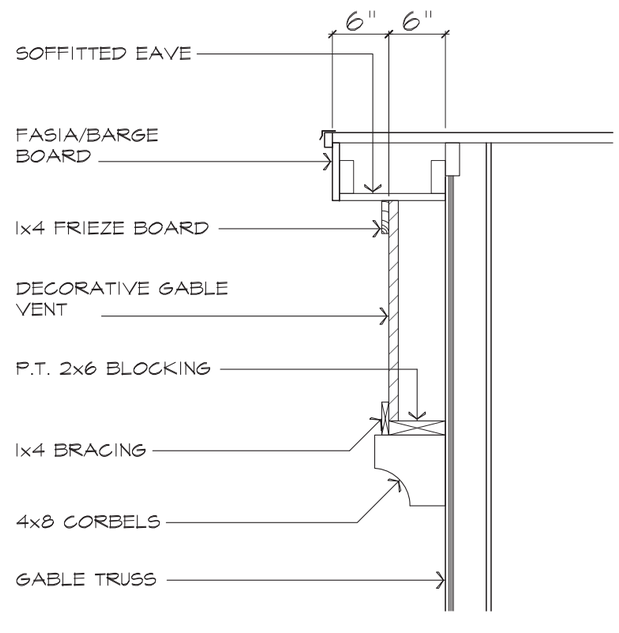

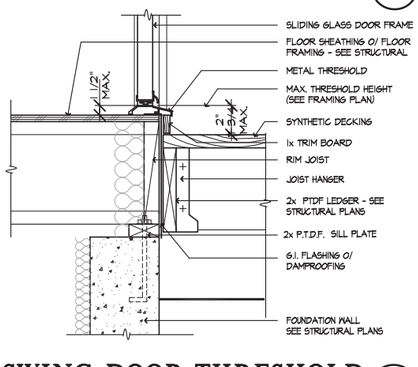

SWING DOOR THRESHOLD

153 AD8

SCALE 1 1/2"=1'-0" 0820-01c

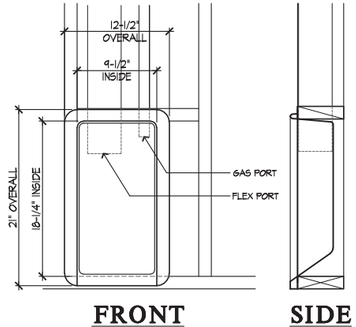

FRONT SIDE

DRYER BOX DETAIL

149 AD8

SCALE: N.T.S. AD8-149

GABLE VENT DETAIL

147 AD8

NOT TO SCALE

kb HOME

DETAILS

KB HOME
NORTH CAROLINA DIVISION

4518 S. MIAMI BLVD.
SUITE 180
DURHAM, NC 27703
TEL: (919) 768-7988
FAX: (919) 472-0582

ISSUE DATE:	09/28/11
PROJECT No.:	1350
DIVISION MGR.:	M.C.P.
REVISIONS:	01/15/20

1 COMPLIANCE REVIEW NC12008 - 02/28/12 - CTD
2 2012 NC CODE UPDATE NC12016 - 03/22/12 - CTD
3 DETAIL UPDATES NC15053 - 11/3/15 - DCS
4 2018 NC CODE UPDATE NC19015 - 01/24/19 - MCP
5 DETAIL UPDATE NC20001NCP - 01/15/20 - MCP

FOR INTERNAL USE ONLY
REVIEWED BY:
1.
2.
3.
4.
5.
6.

PLAN: ALL

SHEET: AD8

These designs and drawings are CONFIDENTIAL, and the exclusive property of KB Home Corporation and are not to be disclosed without the express permission of KB Home Corporation. They may not be used or duplicated without the express permission of KB Home Corporation. Copyright 2014 © KB Home Corporation, all rights reserved.