ENGINEERING BY
TRENCO
A MiTek Affiliate

Trenco
818 Soundside Rd
Edenton, NC 27932

Re: 20595A
149.2115 C CVP

The truss drawing(s) referenced below have been prepared by Truss Engineering Co. under my direct supervision based on the parameters provided by 84 Components - #2383.

Pages or sheets covered by this seal: I36927191 thru I36927239

My license renewal date for the state of North Carolina is December 31, 2019.

North Carolina COA: C-0844

NORTH CAROLINA
PROFESSIONAL
SEAL
45844
ENGINEER
ANDREW JOHNSON

May 1,2019

Johnson, Andrew

IMPORTANT NOTE: Truss Engineer's responsibility is solely for design of individual trusses based upon design parameters shown on referenced truss drawings. Parameters have not been verified as appropriate for any use. Any location identification specified is for file reference only and has not been used in preparing design. Suitability of truss designs for any particular building is the responsibility of the building designer, not the Truss Engineer, per ANSI/TPI-1, Chapter 2.

Job	Truss	Truss Type	Qty	Ply	149.2115 C CVP
20595A	A1	Common	4	1	I36927191 Job Reference (optional)

84 Components (Dunn), Dunn, NC - 28334, 8.220 s Nov 16 2018 MiTek Industries, Inc. Tue Apr 30 16:11:43 2019 Page 1
ID:bNZHYySm82JAWDNgfw9uCLzLbIt-YQ8INkT1t5DbC0dA2W?1n?4VGQccVLjHnRMo3YzLTvk

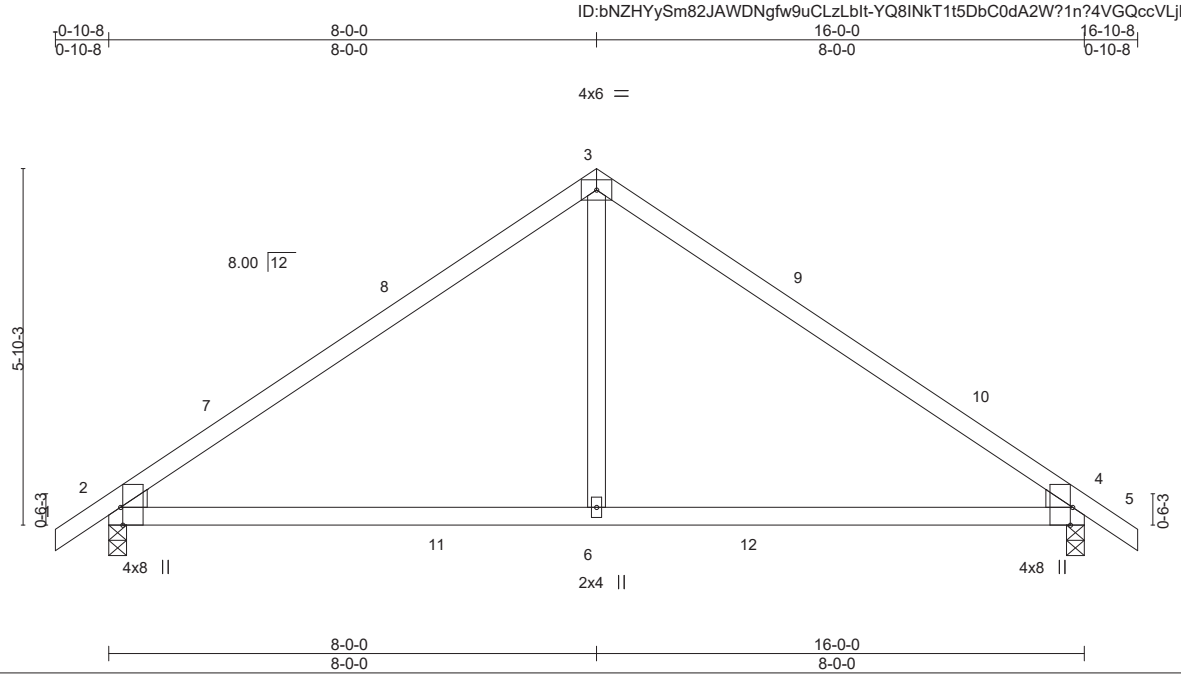

Plate Offsets (X,Y)-- [2:0-0-12,0-1-3], [2:0-1-9,0-5-13], [2:0-3-8,Edge], [4:0-0-12,0-1-3], [4:0-1-9,0-5-13], [4:0-3-8,Edge]

LOADING (psf)		SPACING-	2-0-0	CSI.		DEFL.	in	(loc)	l/defl	L/d	PLATES	GRIP
TCLL	20.0	Plate Grip DOL	1.15	TC	0.76	Vert(LL)	0.09	2-6	>999	240	MT20	244/190
TCDL	10.0	Lumber DOL	1.15	BC	0.68	Vert(CT)	-0.19	2-6	>974	180		
BCLL	0.0 *	Rep Stress Incr	YES	WB	0.15	Horz(CT)	0.01	4	n/a	n/a		
BCDL	10.0	Code IRC2015/TPI2014		Matrix-S							Weight: 65 lb	FT = 20%

LUMBER-
TOP CHORD 2x4 SP No.1
BOT CHORD 2x4 SP No.2
WEBS 2x4 SP No.3
WEDGE
Left: 2x4 SP No.3, Right: 2x4 SP No.3

BRACING-
TOP CHORD Structural wood sheathing directly applied or 4-8-2 oc purlins.
BOT CHORD Rigid ceiling directly applied or 10-0-0 oc bracing.

REACTIONS. (lb/size) 2=690/0-3-8, 4=690/0-3-8
Max Horz 2=-146(LC 10)
Max Uplift 2=-88(LC 12), 4=-88(LC 13)
Max Grav 2=712(LC 19), 4=712(LC 20)

FORCES. (lb) - Max. Comp./Max. Ten. - All forces 250 (lb) or less except when shown.
TOP CHORD 2-3=-826/109, 3-4=-826/109
BOT CHORD 2-6=-3/619, 4-6=-3/619
WEBS 3-6=0/392

NOTES-
1) Unbalanced roof live loads have been considered for this design.
2) Wind: ASCE 7-10; Vult=130mph (3-second gust) Vasd=103mph; TCDL=6.0psf; BCDL=6.0psf; h=25ft; Cat. II; Exp B; Enclosed; MWFRS (envelope) gable end zone and C-C Exterior(2) -0-10-8 to 2-1-8, Interior(1) 2-1-8 to 8-0-0, Exterior(2) 8-0-0 to 11-0-0, Interior(1) 11-0-0 to 16-10-8 zone;C-C for members and forces & MWFRS for reactions shown; Lumber DOL=1.60 plate grip DOL=1.60
3) This truss has been designed for a 10.0 psf bottom chord live load nonconcurrent with any other live loads.
4) * This truss has been designed for a live load of 20.0psf on the bottom chord in all areas where a rectangle 3-6-0 tall by 2-0-0 wide will fit between the bottom chord and any other members, with BCDL = 10.0psf.
5) One RT7A USP connectors recommended to connect truss to bearing walls due to UPLIFT at jt(s) 2 and 4. This connection is for uplift only and does not consider lateral forces.

May 1,2019

WARNING - Verify design parameters and READ NOTES ON THIS AND INCLUDED MITEK REFERENCE PAGE MII-7473 rev. 10/03/2015 BEFORE USE.
Design valid for use only with MiTek® connectors. This design is based only upon parameters shown, and is for an individual building component, not a truss system. Before use, the building designer must verify the applicability of design parameters and properly incorporate this design into the overall building design. Bracing indicated is to prevent buckling of individual truss web and/or chord members only. Additional temporary and permanent bracing is always required for stability and to prevent collapse with possible personal injury and property damage. For general guidance regarding the fabrication, storage, delivery, erection and bracing of trusses and truss systems, see **ANSI/TPI1 Quality Criteria, DSB-89 and BCSI Building Component Safety Information** available from Truss Plate Institute, 218 N. Lee Street, Suite 312, Alexandria, VA 22314.

ENGINEERING BY TRENCO A MiTek Affiliate
818 Soundside Road
Edenton, NC 27932

Job	Truss	Truss Type	Qty	Ply	149.2115 C CVP
20595A	A2	Common	1	1	I36927192 Job Reference (optional)

84 Components (Dunn), Dunn, NC - 28334, 8.220 s Nov 16 2018 MiTek Industries, Inc. Tue Apr 30 16:11:44 2019 Page 1
ID:bNZHYySm82JAWDNgfw9uCLzLbIt-0ciga4UfePLSpACMcEWGKCdeDqymEn_Q056Lb_zLTvj

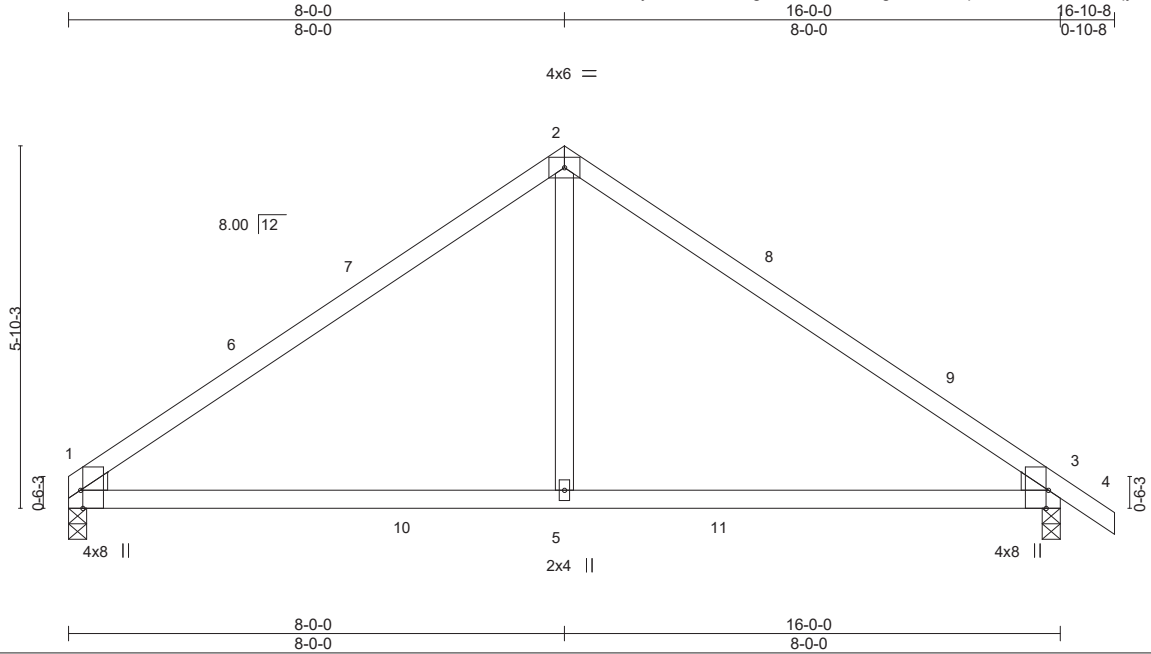

Plate Offsets (X,Y)-- [1:0-3-8,Edge], [1:0-1-9,0-5-13], [1:0-0-12,0-1-3], [3:0-0-12,0-1-3], [3:0-1-9,0-5-13], [3:0-3-8,Edge]

LOADING (psf)		SPACING- 2-0-0		CSI.		DEFL. in (loc) l/defl L/d		PLATES GRIP
TCLL	20.0	Plate Grip DOL	1.15	TC	0.81	Vert(LL) -0.09 1-5 >999 240		MT20 244/190
TCDL	10.0	Lumber DOL	1.15	BC	0.68	Vert(CT) -0.20 1-5 >948 180		
BCLL	0.0 *	Rep Stress Incr	YES	WB	0.15	Horz(CT) 0.01 3 n/a n/a		
BCDL	10.0	Code IRC2015/TPI2014		Matrix-S				Weight: 64 lb FT = 20%

LUMBER-
TOP CHORD 2x4 SP No.1
BOT CHORD 2x4 SP No.2
WEBS 2x4 SP No.3
WEDGE
Left: 2x4 SP No.3, Right: 2x4 SP No.3

BRACING-
TOP CHORD Structural wood sheathing directly applied or 2-4-4 oc purlins.
BOT CHORD Rigid ceiling directly applied or 10-0-0 oc bracing.

REACTIONS. (lb/size) 3=692/0-3-8, 1=626/0-3-8
Max Horz 1=-143(LC 10)
Max Uplift 3=-88(LC 13), 1=-66(LC 12)
Max Grav 3=713(LC 20), 1=653(LC 19)

FORCES. (lb) - Max. Comp./Max. Ten. - All forces 250 (lb) or less except when shown.
TOP CHORD 1-2=-804/109, 2-3=-829/109
BOT CHORD 1-5=-4/622, 3-5=-4/622
WEBS 2-5=0/392

NOTES-
1) Unbalanced roof live loads have been considered for this design.
2) Wind: ASCE 7-10; Vult=130mph (3-second gust) Vasd=103mph; TCDL=6.0psf; BCDL=6.0psf; h=25ft; Cat. II; Exp B; Enclosed; MWFRS (envelope) gable end zone and C-C Exterior(2) 0-1-12 to 3-1-12, Interior(1) 3-1-12 to 8-0-0, Exterior(2) 8-0-0 to 11-0-0, Interior(1) 11-0-0 to 16-10-8 zone;C-C for members and forces & MWFRS for reactions shown; Lumber DOL=1.60 plate grip DOL=1.60
3) This truss has been designed for a 10.0 psf bottom chord live load nonconcurrent with any other live loads.
4) * This truss has been designed for a live load of 20.0psf on the bottom chord in all areas where a rectangle 3-6-0 tall by 2-0-0 wide will fit between the bottom chord and any other members, with BCDL = 10.0psf.
5) One RT7A USP connectors recommended to connect truss to bearing walls due to UPLIFT at jt(s) 3 and 1. This connection is for uplift only and does not consider lateral forces.

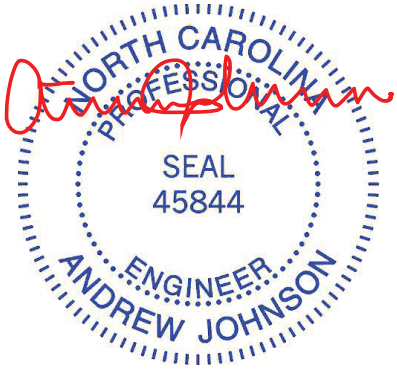

May 1,2019

WARNING - Verify design parameters and READ NOTES ON THIS AND INCLUDED MITEK REFERENCE PAGE MII-7473 rev. 10/03/2015 BEFORE USE.
Design valid for use only with MiTek® connectors. This design is based only upon parameters shown, and is for an individual building component, not a truss system. Before use, the building designer must verify the applicability of design parameters and properly incorporate this design into the overall building design. Bracing indicated is to prevent buckling of individual truss web and/or chord members only. Additional temporary and permanent bracing is always required for stability and to prevent collapse with possible personal injury and property damage. For general guidance regarding the fabrication, storage, delivery, erection and bracing of trusses and truss systems, see **ANSI/TPI1 Quality Criteria, DSB-89 and BCSI Building Component Safety Information** available from Truss Plate Institute, 218 N. Lee Street, Suite 312, Alexandria, VA 22314.

ENGINEERING BY TRENCO A MiTek Affiliate
818 Soundside Road
Edenton, NC 27932

Job	Truss	Truss Type	Qty	Ply	149.2115 C CVP
20595A	AE	Common Supported Gable	1	1	I36927193 Job Reference (optional)

84 Components (Dunn), Dunn, NC - 28334, 8.220 s Nov 16 2018 MiTek Industries, Inc. Tue Apr 30 16:11:45 2019 Page 1
ID:bNZHYySm82JAWDNgfw9uCLzLbIt-UpG2oQVHPjTJRKnYAx1VtQA?qDS8zFYZFIrv8QzLTvi

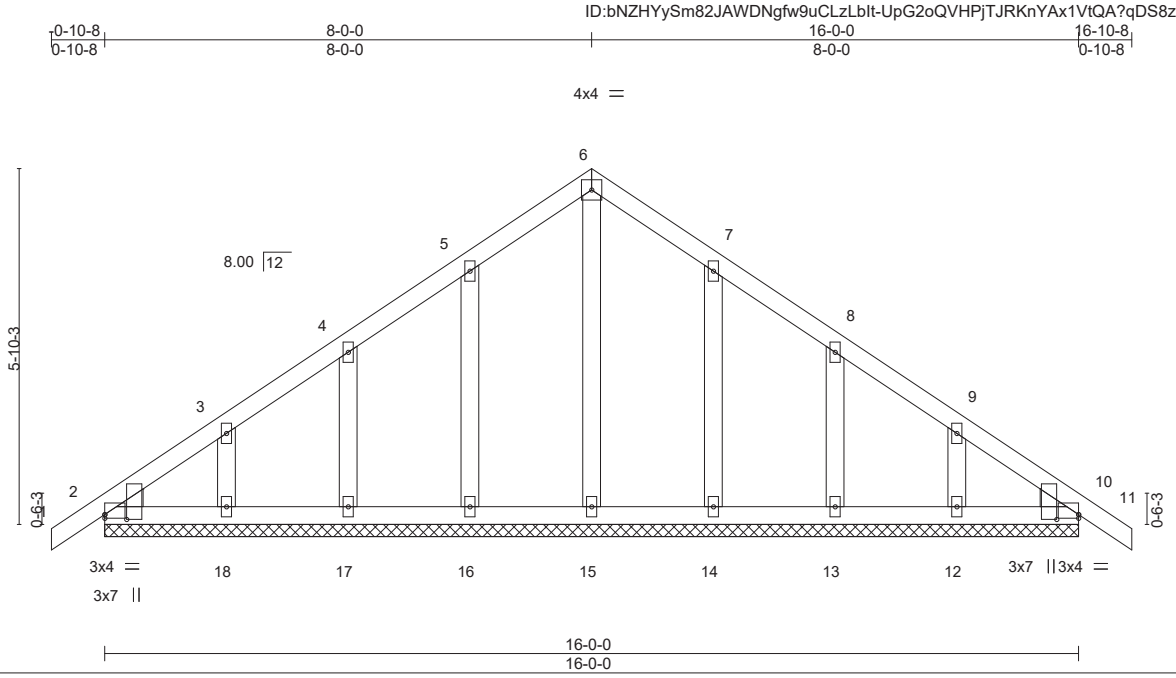

Plate Offsets (X,Y)-- [2:0-0-0,0-0-12], [2:0-0-15,0-4-5], [10:0-0-0,0-0-12], [10:0-0-15,0-4-5]

LOADING (psf)		**SPACING-** 2-0-0		**CSI.**		**DEFL.**	in	(loc)	l/defl	L/d	**PLATES**	**GRIP**
TCLL	20.0	Plate Grip DOL	1.15	TC	0.05	Vert(LL)	-0.00	10	n/r	120	MT20	244/190
TCDL	10.0	Lumber DOL	1.15	BC	0.03	Vert(CT)	-0.00	10	n/r	120		
BCLL	0.0 *	Rep Stress Incr	YES	WB	0.07	Horz(CT)	0.00	10	n/a	n/a		
BCDL	10.0	Code IRC2015/TPI2014		Matrix-S							Weight: 89 lb	FT = 20%

LUMBER-
TOP CHORD 2x4 SP No.2
BOT CHORD 2x4 SP No.2
OTHERS 2x4 SP No.3
WEDGE
Left: 2x4 SP No.3, Right: 2x4 SP No.3

BRACING-
TOP CHORD Structural wood sheathing directly applied or 6-0-0 oc purlins.
BOT CHORD Rigid ceiling directly applied or 10-0-0 oc bracing.

REACTIONS. All bearings 16-0-0.
(lb) - Max Horz 2=-146(LC 10)
Max Uplift All uplift 100 lb or less at joint(s) 2, 16, 17, 18, 14, 13, 12
Max Grav All reactions 250 lb or less at joint(s) 2, 10, 15, 16, 17, 18, 14, 13, 12

FORCES. (lb) - Max. Comp./Max. Ten. - All forces 250 (lb) or less except when shown.

NOTES-
1) Unbalanced roof live loads have been considered for this design.
2) Wind: ASCE 7-10; Vult=130mph (3-second gust) Vasd=103mph; TCDL=6.0psf; BCDL=6.0psf; h=25ft; Cat. II; Exp B; Enclosed; MWFRS (envelope) gable end zone and C-C Corner(3) -0-10-8 to 2-0-0, Exterior(2) 2-0-0 to 8-0-0, Corner(3) 8-0-0 to 11-0-0, Exterior(2) 11-0-0 to 16-10-8 zone;C-C for members and forces & MWFRS for reactions shown; Lumber DOL=1.60 plate grip DOL=1.60
3) Truss designed for wind loads in the plane of the truss only. For studs exposed to wind (normal to the face), see Standard Industry Gable End Details as applicable, or consult qualified building designer as per ANSI/TPI 1.
4) All plates are 2x4 MT20 unless otherwise indicated.
5) Gable requires continuous bottom chord bearing.
6) Gable studs spaced at 2-0-0 oc.
7) This truss has been designed for a 10.0 psf bottom chord live load nonconcurrent with any other live loads.
8) * This truss has been designed for a live load of 20.0psf on the bottom chord in all areas where a rectangle 3-6-0 tall by 2-0-0 wide will fit between the bottom chord and any other members.
9) Provide mechanical connection (by others) of truss to bearing plate capable of withstanding 100 lb uplift at joint(s) 2, 16, 17, 18, 14, 13, 12.

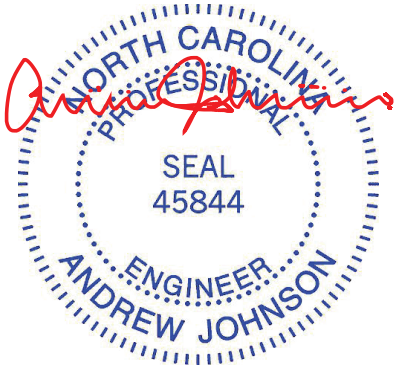

May 1,2019

WARNING - Verify design parameters and READ NOTES ON THIS AND INCLUDED MITEK REFERENCE PAGE MII-7473 rev. 10/03/2015 BEFORE USE.
Design valid for use only with MiTek® connectors. This design is based only upon parameters shown, and is for an individual building component, not a truss system. Before use, the building designer must verify the applicability of design parameters and properly incorporate this design into the overall building design. Bracing indicated is to prevent buckling of individual truss web and/or chord members only. Additional temporary and permanent bracing is always required for stability and to prevent collapse with possible personal injury and property damage. For general guidance regarding the fabrication, storage, delivery, erection and bracing of trusses and truss systems, see **ANSI/TPI1 Quality Criteria, DSB-89 and BCSI Building Component Safety Information** available from Truss Plate Institute, 218 N. Lee Street, Suite 312, Alexandria, VA 22314.

ENGINEERING BY TRENCO A MiTek Affiliate
818 Soundside Road
Edenton, NC 27932

Job	Truss	Truss Type	Qty	Ply	149.2115 C CVP
20595A	AG	COMMON GIRDER	1	3	I36927194 Job Reference (optional)

84 Components (Dunn), Dunn, NC - 28334, 8.220 s Nov 16 2018 MiTek Industries, Inc. Tue Apr 30 16:11:46 2019 Page 1
ID:bNZHYySm82JAWDNgfw9uCLzLbIt-y?qQ?lWv90bA3UMlkeYkPdi4fdZLiWHjTPbSgtzLTvh

Scale = 1:37.1

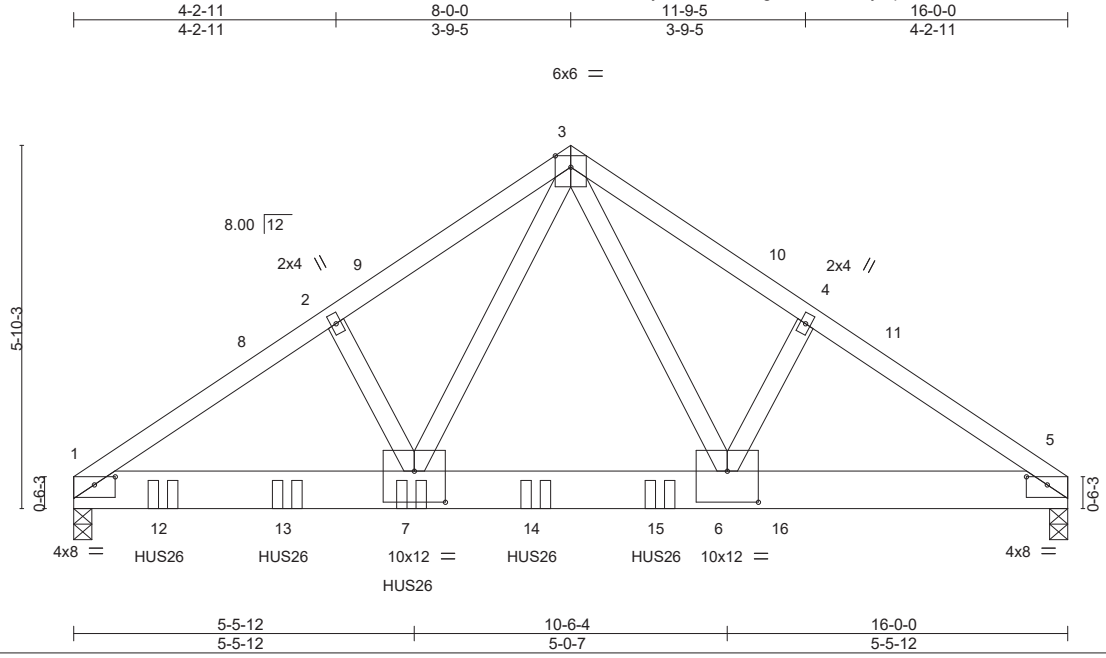

Plate Offsets (X,Y)-- [1:0-4-0,0-1-9], [5:0-4-0,0-1-9], [6:0-6-0,0-6-0], [7:0-6-0,0-6-0]

LOADING (psf)		SPACING- 2-0-0		CSI.		DEFL.	in	(loc)	l/defl	L/d	PLATES	GRIP
TCLL	20.0	Plate Grip DOL	1.15	TC	0.43	Vert(LL)	-0.08	6-7	>999	240	MT20	244/190
TCDL	10.0	Lumber DOL	1.15	BC	0.99	Vert(CT)	-0.16	6-7	>999	180		
BCLL	0.0 *	Rep Stress Incr	NO	WB	0.87	Horz(CT)	0.03	5	n/a	n/a		
BCDL	10.0	Code IRC2015/TPI2014		Matrix-S							Weight: 309 lb	FT = 20%

LUMBER-
TOP CHORD 2x4 SP No.2
BOT CHORD 2x8 SP No.2
WEBS 2x4 SP No.3

BRACING-
TOP CHORD Structural wood sheathing directly applied or 6-0-0 oc purlins.
BOT CHORD Rigid ceiling directly applied or 10-0-0 oc bracing.

REACTIONS. (lb/size) 1=7889/0-3-8, 5=6047/0-3-8
Max Horz 1=-133(LC 31)
Max Uplift 1=-986(LC 12), 5=-1176(LC 13)

FORCES. (lb) - Max. Comp./Max. Ten. - All forces 250 (lb) or less except when shown.
TOP CHORD 1-2=-10254/1393, 2-3=-10111/1433, 3-4=-9705/1881, 4-5=-9866/1843
BOT CHORD 1-7=-1148/8365, 6-7=-856/5713, 5-6=-1451/8020
WEBS 3-6=-1435/5500, 4-6=-267/290, 3-7=-555/6289, 2-7=-254/270

NOTES-
1) 3-ply truss to be connected together with 10d (0.131"x3") nails as follows:
Top chords connected as follows: 2x4 - 1 row at 0-9-0 oc.
Bottom chords connected as follows: 2x8 - 3 rows staggered at 0-4-0 oc.
Webs connected as follows: 2x4 - 1 row at 0-9-0 oc.
2) All loads are considered equally applied to all plies, except if noted as front (F) or back (B) face in the LOAD CASE(S) section. Ply to ply connections have been provided to distribute only loads noted as (F) or (B), unless otherwise indicated.
3) Unbalanced roof live loads have been considered for this design.
4) Wind: ASCE 7-10; Vult=130mph (3-second gust) Vasd=103mph; TCDL=6.0psf; BCDL=6.0psf; h=25ft; Cat. II; Exp B; Enclosed; MWFRS (envelope) gable end zone and C-C Exterior(2) 0-1-12 to 3-1-12, Interior(1) 3-1-12 to 8-0-0, Exterior(2) 8-0-0 to 11-0-0, Interior(1) 11-0-0 to 15-10-4 zone;C-C for members and forces & MWFRS for reactions shown; Lumber DOL=1.60 plate grip DOL=1.60
5) This truss has been designed for a 10.0 psf bottom chord live load nonconcurrent with any other live loads.
6) * This truss has been designed for a live load of 20.0psf on the bottom chord in all areas where a rectangle 3-6-0 tall by 2-0-0 wide will fit between the bottom chord and any other members.
7) Provide mechanical connection (by others) of truss to bearing plate capable of withstanding 100 lb uplift at joint(s) except (jt=lb) 1=986, 5=1176.
8) Use USP HUS26 (With 16d nails into Girder & 16d nails into Truss) or equivalent spaced at 2-0-0 oc max. starting at 1-5-4 from the left end to 9-5-4 to connect truss(es) to back face of bottom chord.
9) Fill all nail holes where hanger is in contact with lumber.
10) Hanger(s) or other connection device(s) shall be provided sufficient to support concentrated load(s) 2989 lb down and 1095 lb up at 11-5-4 on bottom chord. The design/selection of such connection device(s) is the responsibility of others.

LOAD CASE(S) Standard
1) Dead + Roof Live (balanced): Lumber Increase=1.15, Plate Increase=1.15

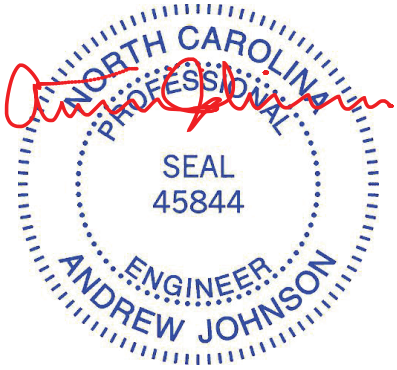

May 1,2019

Continued on page 2

WARNING - Verify design parameters and READ NOTES ON THIS AND INCLUDED MITEK REFERENCE PAGE MII-7473 rev. 10/03/2015 BEFORE USE.
Design valid for use only with MiTek® connectors. This design is based only upon parameters shown, and is for an individual building component, not a truss system. Before use, the building designer must verify the applicability of design parameters and properly incorporate this design into the overall building design. Bracing indicated is to prevent buckling of individual truss web and/or chord members only. Additional temporary and permanent bracing is always required for stability and to prevent collapse with possible personal injury and property damage. For general guidance regarding the fabrication, storage, delivery, erection and bracing of trusses and truss systems, see **ANSI/TPI1 Quality Criteria, DSB-89 and BCSI Building Component Safety Information** available from Truss Plate Institute, 218 N. Lee Street, Suite 312, Alexandria, VA 22314.

ENGINEERING BY
TRENCO
A MiTek Affiliate
818 Soundside Road
Edenton, NC 27932

LOAD CASE(S) Standard

Uniform Loads (plf)

Vert: 1-3=-60, 3-5=-60, 1-5=-20

Concentrated Loads (lb)

Vert: 7=-1938(B) 12=-1938(B) 13=-1938(B) 14=-1938(B) 15=-1938(B) 16=-2989(B)

WARNING - Verify design parameters and READ NOTES ON THIS AND INCLUDED MITEK REFERENCE PAGE MII-7473 rev. 10/03/2015 BEFORE USE.

Design valid for use only with MiTek® connectors. This design is based only upon parameters shown, and is for an individual building component, not a truss system. Before use, the building designer must verify the applicability of design parameters and properly incorporate this design into the overall building design. Bracing indicated is to prevent buckling of individual truss web and/or chord members only. Additional temporary and permanent bracing is always required for stability and to prevent collapse with possible personal injury and property damage. For general guidance regarding the fabrication, storage, delivery, erection and bracing of trusses and truss systems, see **ANSI/TPI1 Quality Criteria, DSB-89 and BCSI Building Component Safety Information** available from Truss Plate Institute, 218 N. Lee Street, Suite 312, Alexandria, VA 22314.

ENGINEERING BY TRENCO A MiTek Affiliate

818 Soundside Road
Edenton, NC 27932

Job	Truss	Truss Type	Qty	Ply	149.2115 C CVP
20595A	B1	ROOF TRUSS	2	1	I36927195 Job Reference (optional)

84 Components (Dunn), Dunn, NC - 28334, 8.220 s Nov 16 2018 MiTek Industries, Inc. Tue Apr 30 16:11:48 2019 Page 1

ID:bNZHYySm82JAWDNgfw9uCLzLbIt-vOyBQRX9heruloV7r3bCU2nKfRE?ARh0xj4ZklzLTvf

-0-10-8	6-11-11	13-4-13	19-10-0	25-0-0	30-2-0	36-7-3	43-0-5	50-0-0
0-10-8	6-11-11	6-5-3	6-5-3	5-2-0	5-2-0	6-5-3	6-5-3	6-11-11

Scale = 1:87.8

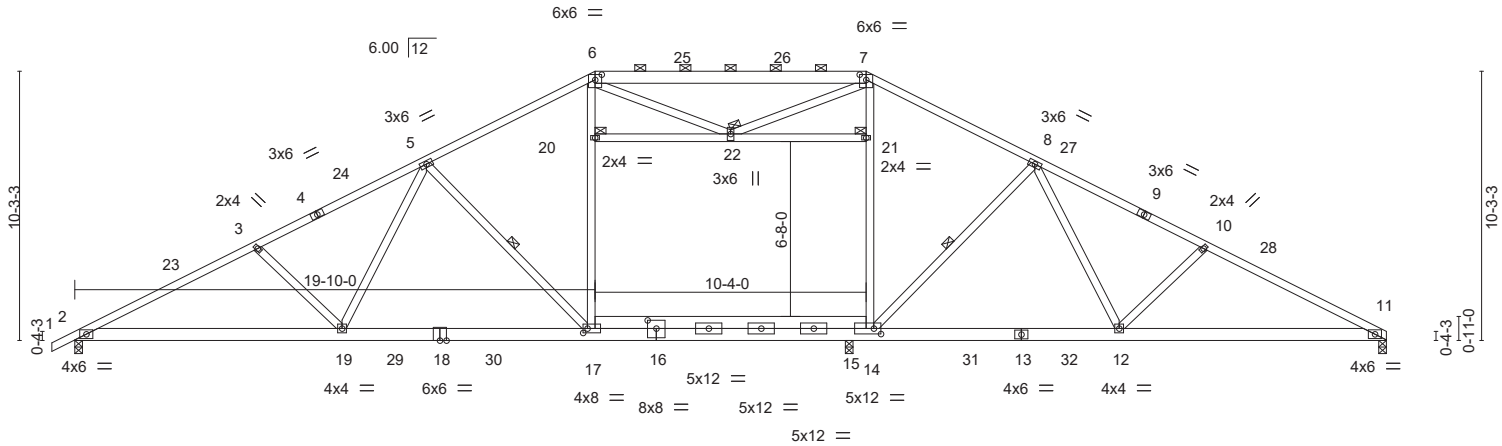

10-2-4	19-10-0	25-0-0	29-8-0	30-2-0	39-9-12	50-0-0
10-2-4	9-7-12	5-2-0	4-8-0	0-6-0	9-7-12	10-2-4

Plate Offsets (X,Y)-- [6:0-3-0,0-2-7], [7:0-3-0,0-2-7], [14:0-3-4,0-2-8], [16:0-0-0,0-2-12], [16:0-4-0,0-3-12], [17:0-2-0,0-2-0]

LOADING (psf)		SPACING- 2-0-0		CSI.		DEFL.	in	(loc)	l/defl	L/d	PLATES	GRIP
TCLL	20.0	Plate Grip DOL	1.15	TC	0.78	Vert(LL)	-0.53	17-19	>661	240	MT20	244/190
TCDL	10.0	Lumber DOL	1.15	BC	0.98	Vert(CT)	-0.97	17-19	>363	180		
BCLL	0.0 *	Rep Stress Incr	YES	WB	0.81	Horz(CT)	0.11	11	n/a	n/a		
BCDL	10.0	Code IRC2015/TPI2014		Matrix-S		Attic	0.06	14-15	329	360	Weight: 353 lb	FT = 20%

LUMBER-

TOP CHORD 2x4 SP No.2 *Except*
6-7: 2x6 SP DSS, 9-11: 2x4 SP No.1

BOT CHORD 2x6 SP DSS *Except*
14-17,16-18: 2x6 SP No.2

WEBS 2x4 SP No.3 *Except*
6-17,7-14: 2x4 SP No.2

BRACING-

TOP CHORD Structural wood sheathing directly applied, except 2-0-0 oc purlins (4-7-10 max.): 6-7.

BOT CHORD Rigid ceiling directly applied or 10-0-0 oc bracing, Except: 2-2-0 oc bracing: 17-19.

WEBS 1 Row at midpt 5-17, 8-14

JOINTS 1 Brace at Jt(s): 20, 21, 22

REACTIONS. (lb/size) 2=1897/0-3-8, 11=1743/0-3-8, 15=504/0-3-8
Max Horz 2=180(LC 12)
Max Uplift 2=-260(LC 12), 11=-105(LC 12), 15=-207(LC 13)
Max Grav 2=2053(LC 26), 11=1862(LC 2), 15=834(LC 27)

FORCES. (lb) - Max. Comp./Max. Ten. - All forces 250 (lb) or less except when shown.

TOP CHORD 2-3=-4033/503, 3-5=-3791/492, 5-6=-2924/464, 6-7=-2537/418, 7-8=-2802/476, 8-10=-3407/490, 10-11=-3659/517

BOT CHORD 2-19=-519/3535, 17-19=-338/3047, 15-17=-152/2538, 14-15=-139/2386, 12-14=-233/2801, 11-12=-378/3209

WEBS 3-19=-366/225, 5-19=-54/653, 5-17=-781/267, 17-20=-66/873, 6-20=-54/892, 14-21=-108/769, 7-21=-97/798, 8-14=-658/274, 8-12=-69/516, 10-12=-399/238

NOTES-

1) Unbalanced roof live loads have been considered for this design.
2) Wind: ASCE 7-10; Vult=130mph (3-second gust) Vasd=103mph; TCDL=6.0psf; BCDL=6.0psf; h=25ft; Cat. II; Exp B; Enclosed; MWFRS (envelope) gable end zone and C-C Exterior(2) -0-10-8 to 4-1-8, Interior(1) 4-1-8 to 19-10-0, Exterior(2) 19-10-0 to 26-10-14 , Interior(1) 26-10-14 to 30-2-0, Exterior(2) 30-2-0 to 37-2-14, Interior(1) 37-2-14 to 49-10-4 zone;C-C for members and forces & MWFRS for reactions shown; Lumber DOL=1.60 plate grip DOL=1.60
3) Provide adequate drainage to prevent water ponding.
4) This truss has been designed for a 10.0 psf bottom chord live load nonconcurrent with any other live loads.
5) * This truss has been designed for a live load of 20.0psf on the bottom chord in all areas where a rectangle 3-6-0 tall by 2-0-0 wide will fit between the bottom chord and any other members, with BCDL = 10.0psf.
6) Ceiling dead load (5.0 psf) on member(s). 20-22, 21-22
7) Bottom chord live load (40.0 psf) and additional bottom chord dead load (0.0 psf) applied only to room. 15-17, 14-15
8) One RT7A USP connectors recommended to connect truss to bearing walls due to UPLIFT at jt(s) 2, 11, and 15. This connection is for uplift only and does not consider lateral forces.
9) Graphical purlin representation does not depict the size or the orientation of the purlin along the top and/or bottom chord.
10) ATTIC SPACE SHOWN IS DESIGNED AS UNINHABITABLE.

May 1,2019

WARNING - Verify design parameters and READ NOTES ON THIS AND INCLUDED MITEK REFERENCE PAGE MII-7473 rev. 10/03/2015 BEFORE USE.
Design valid for use only with MiTek® connectors. This design is based only upon parameters shown, and is for an individual building component, not a truss system. Before use, the building designer must verify the applicability of design parameters and properly incorporate this design into the overall building design. Bracing indicated is to prevent buckling of individual truss web and/or chord members only. Additional temporary and permanent bracing is always required for stability and to prevent collapse with possible personal injury and property damage. For general guidance regarding the fabrication, storage, delivery, erection and bracing of trusses and truss systems, see **ANSI/TPI1 Quality Criteria, DSB-89 and BCSI Building Component Safety Information** available from Truss Plate Institute, 218 N. Lee Street, Suite 312, Alexandria, VA 22314.

ENGINEERING BY TRENCO A MiTek Affiliate
818 Soundside Road
Edenton, NC 27932

Job	Truss	Truss Type	Qty	Ply	149.2115 C CVP
20595A	B1A	ROOF TRUSS	1	1	I36927196 Job Reference (optional)

84 Components (Dunn), Dunn, NC - 28334, 8.220 s Nov 16 2018 MiTek Industries, Inc. Tue Apr 30 16:11:49 2019 Page 1

ID:bNZHYySm82JAWDNgfw9uCLzLbIt-NaWZdnYnSxzlwx4KPn6R1GKVOraEvux9ANp6HCzLTve

-0-10-8	6-11-11	13-4-13	19-10-0	25-0-0	30-2-0	36-7-3	43-0-5	50-0-0
0-10-8	6-11-11	6-5-3	6-5-3	5-2-0	5-2-0	6-5-3	6-5-3	6-11-11

Scale = 1:87.8

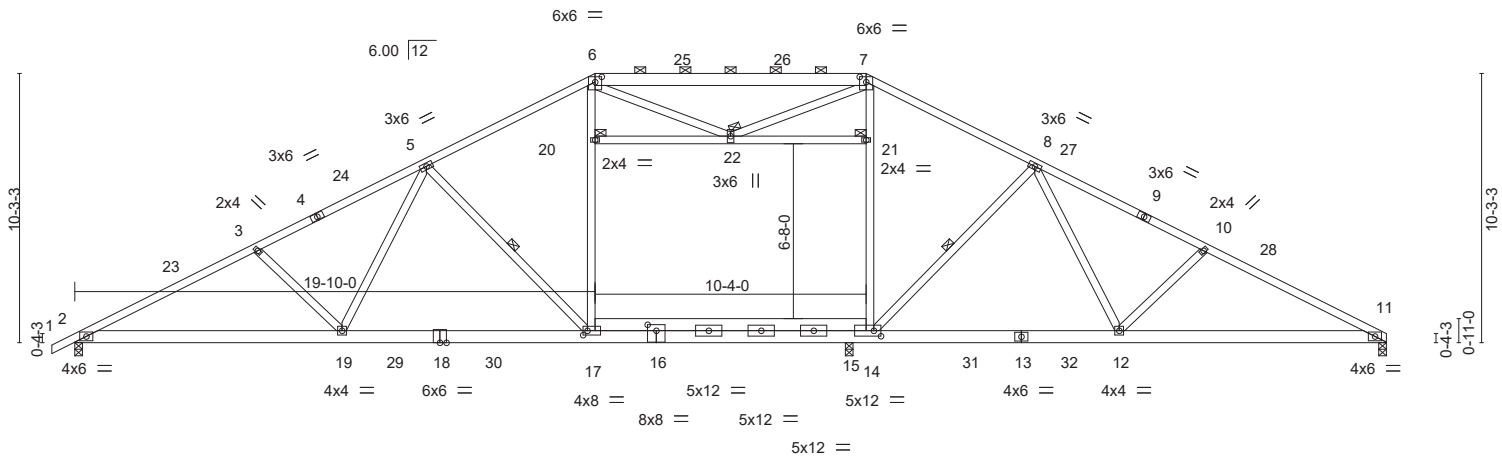

10-2-4	19-10-0	25-0-0	29-8-0	30-2-0	39-9-12	50-0-0
10-2-4	9-7-12	5-2-0	4-8-0	0-6-0	9-7-12	10-2-4

Plate Offsets (X,Y)-- [6:0-3-0,0-2-7], [7:0-3-0,0-2-7], [14:0-3-4,0-2-8], [16:0-0-0,0-2-12], [16:0-4-0,0-2-12], [17:0-2-0,0-2-0]

LOADING (psf)		**SPACING-** 2-0-0	**CSI.**		**DEFL.**	in	(loc)	l/defl	L/d	**PLATES**	**GRIP**
TCLL	20.0	Plate Grip DOL 1.15	TC	0.78	Vert(LL)	-0.53	17-19	>661	240	MT20	244/190
TCDL	10.0	Lumber DOL 1.15	BC	0.98	Vert(CT)	-0.97	17-19	>363	180		
BCLL	0.0 *	Rep Stress Incr YES	WB	0.81	Horz(CT)	0.11	11	n/a	n/a		
BCDL	10.0	Code IRC2015/TPI2014	Matrix-S		Attic	0.06	14-15	329	360	Weight: 353 lb	FT = 20%

LUMBER-

TOP CHORD 2x4 SP No.2 *Except*
6-7: 2x6 SP DSS, 9-11: 2x4 SP No.1

BOT CHORD 2x6 SP DSS *Except*
16-18,14-17: 2x6 SP No.2

WEBS 2x4 SP No.3 *Except*
6-17,7-14: 2x4 SP No.2

BRACING-

TOP CHORD Structural wood sheathing directly applied, except 2-0-0 oc purlins (4-7-10 max.): 6-7.

BOT CHORD Rigid ceiling directly applied or 10-0-0 oc bracing, Except: 2-2-0 oc bracing: 17-19.

WEBS 1 Row at midpt 5-17, 8-14

JOINTS 1 Brace at Jt(s): 20, 21, 22

REACTIONS. (lb/size) 2=1897/0-3-8, 11=1743/0-3-8, 15=504/0-3-8
Max Horz 2=180(LC 12)
Max Uplift 2=-260(LC 12), 11=-105(LC 12), 15=-207(LC 13)
Max Grav 2=2053(LC 26), 11=1862(LC 2), 15=834(LC 27)

FORCES. (lb) - Max. Comp./Max. Ten. - All forces 250 (lb) or less except when shown.

TOP CHORD 2-3=-4033/503, 3-5=-3791/492, 5-6=-2924/464, 6-7=-2537/418, 7-8=-2802/476, 8-10=-3407/490, 10-11=-3659/517

BOT CHORD 2-19=-519/3535, 17-19=-338/3047, 15-17=-152/2538, 14-15=-139/2386, 12-14=-233/2801, 11-12=-378/3209

WEBS 3-19=-366/225, 5-19=-54/653, 5-17=-781/267, 17-20=-66/873, 6-20=-54/892, 14-21=-108/769, 7-21=-97/798, 8-14=-658/274, 8-12=-69/516, 10-12=-399/238

NOTES-

1) Unbalanced roof live loads have been considered for this design.
2) Wind: ASCE 7-10; Vult=130mph (3-second gust) Vasd=103mph; TCDL=6.0psf; BCDL=6.0psf; h=25ft; Cat. II; Exp B; Enclosed; MWFRS (envelope) gable end zone and C-C Exterior(2) -0-10-8 to 4-1-8, Interior(1) 4-1-8 to 19-10-0, Exterior(2) 19-10-0 to 26-10-14 , Interior(1) 26-10-14 to 30-2-0, Exterior(2) 30-2-0 to 37-2-14, Interior(1) 37-2-14 to 49-10-4 zone;C-C for members and forces & MWFRS for reactions shown; Lumber DOL=1.60 plate grip DOL=1.60
3) Provide adequate drainage to prevent water ponding.
4) This truss has been designed for a 10.0 psf bottom chord live load nonconcurrent with any other live loads.
5) * This truss has been designed for a live load of 20.0psf on the bottom chord in all areas where a rectangle 3-6-0 tall by 2-0-0 wide will fit between the bottom chord and any other members, with BCDL = 10.0psf.
6) Ceiling dead load (5.0 psf) on member(s). 20-22, 21-22
7) Bottom chord live load (40.0 psf) and additional bottom chord dead load (0.0 psf) applied only to room. 15-17, 14-15
8) One RT7A USP connectors recommended to connect truss to bearing walls due to UPLIFT at jt(s) 2, 11, and 15. This connection is for uplift only and does not consider lateral forces.
9) Graphical purlin representation does not depict the size or the orientation of the purlin along the top and/or bottom chord.
10) ATTIC SPACE SHOWN IS DESIGNED AS UNINHABITABLE.

May 1,2019

WARNING - Verify design parameters and READ NOTES ON THIS AND INCLUDED MITEK REFERENCE PAGE MII-7473 rev. 10/03/2015 BEFORE USE.

Design valid for use only with MiTek® connectors. This design is based only upon parameters shown, and is for an individual building component, not a truss system. Before use, the building designer must verify the applicability of design parameters and properly incorporate this design into the overall building design. Bracing indicated is to prevent buckling of individual truss web and/or chord members only. Additional temporary and permanent bracing is always required for stability and to prevent collapse with possible personal injury and property damage. For general guidance regarding the fabrication, storage, delivery, erection and bracing of trusses and truss systems, see **ANSI/TPI1 Quality Criteria, DSB-89 and BCSI Building Component Safety Information** available from Truss Plate Institute, 218 N. Lee Street, Suite 312, Alexandria, VA 22314.

ENGINEERING BY TRENCO A MiTek Affiliate

818 Soundside Road
Edenton, NC 27932

Job	Truss	Truss Type	Qty	Ply	149.2115 C CVP
20595A	B2	Piggyback Base	3	1	I36927197 Job Reference (optional)

84 Components (Dunn), Dunn, NC - 28334, 8.220 s Nov 16 2018 MiTek Industries, Inc. Tue Apr 30 16:11:50 2019 Page 1
ID:bNZHYySm82JAWDNgfw9uCLzLbIt-rm4xr7ZQDF5cX5fWzUdgaTthME_HeKLIO1ZfpezLTvd

-0-10-8	6-11-11	13-4-13	19-10-0	25-0-0	30-2-0	36-7-3	43-0-5	43-4-4	50-0-0	50-10-8
0-10-8	6-11-11	6-5-3	6-5-3	5-2-0	5-2-0	6-5-3	6-5-3	0-3-15	6-7-12	0-10-8

Scale = 1:86.4

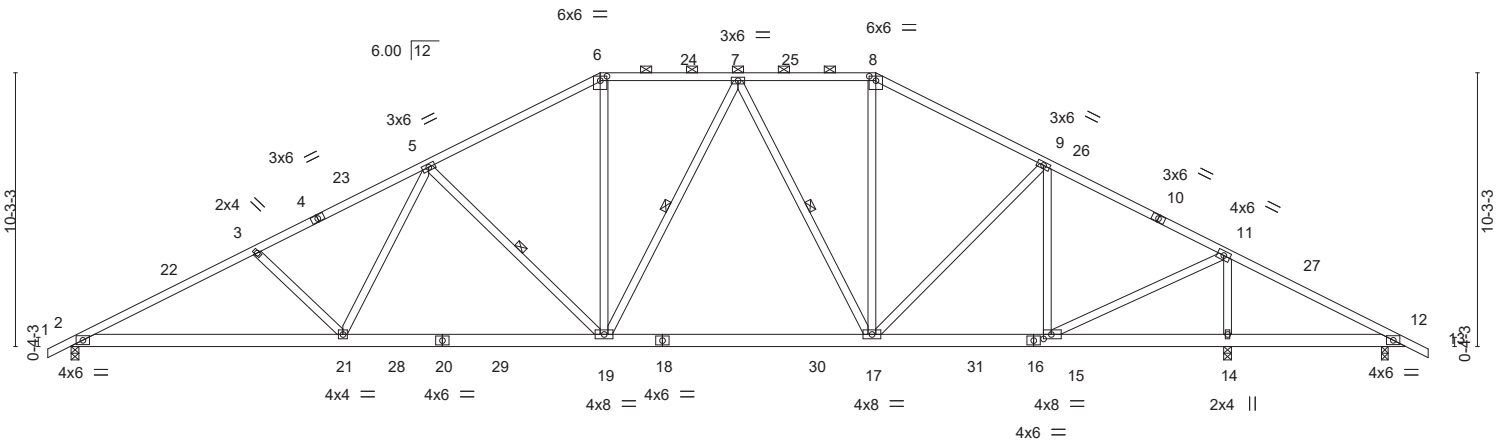

10-2-4	19-10-0	25-0-0	30-2-0	36-7-3	43-4-4	49-4-8	50-0-0
10-2-4	9-7-12	5-2-0	5-2-0	6-5-3	6-9-1	6-0-4	0-7-8

Plate Offsets (X,Y)-- [6:0-3-0,0-2-0], [8:0-3-0,0-2-0], [15:0-3-8,0-2-0]

LOADING (psf)		SPACING- 2-0-0		CSI.		DEFL.	in	(loc)	l/defl	L/d	PLATES	GRIP
TCLL	20.0	Plate Grip DOL	1.15	TC	0.71	Vert(LL)	-0.19	17-19	>999	240	MT20	244/190
TCDL	10.0	Lumber DOL	1.15	BC	0.74	Vert(CT)	-0.36	17-19	>999	180		
BCLL	0.0 *	Rep Stress Incr	YES	WB	0.86	Horz(CT)	0.07	14	n/a	n/a		
BCDL	10.0	Code IRC2015/TPI2014		Matrix-S							Weight: 330 lb	FT = 20%

LUMBER-
TOP CHORD 2x4 SP No.2
BOT CHORD 2x6 SP No.2
WEBS 2x4 SP No.3

BRACING-
TOP CHORD Structural wood sheathing directly applied or 2-3-7 oc purlins, except 2-0-0 oc purlins (4-1-13 max.): 6-8.
BOT CHORD Rigid ceiling directly applied or 6-0-0 oc bracing.
WEBS 1 Row at midpt 5-19, 7-19, 7-17

REACTIONS. (lb/size) 2=1729/0-3-8, 14=2449/0-3-8, 12=-79/0-3-0
Max Horz 2=-173(LC 13)
Max Uplift 2=-207(LC 12), 14=-187(LC 13), 12=-219(LC 25)
Max Grav 2=1729(LC 1), 14=2449(LC 1), 12=37(LC 12)

FORCES. (lb) - Max. Comp./Max. Ten. - All forces 250 (lb) or less except when shown.
TOP CHORD 2-3=-3207/464, 3-5=-2914/453, 5-6=-2112/431, 6-7=-1826/435, 7-8=-1491/391, 8-9=-1739/383, 9-11=-1412/281, 11-12=-126/842
BOT CHORD 2-21=-406/2788, 19-21=-234/2298, 17-19=-78/1726, 15-17=-75/1195, 14-15=-681/180, 12-14=-681/180
WEBS 3-21=-376/226, 5-21=-46/584, 5-19=-741/268, 6-19=-57/642, 7-19=-78/297, 7-17=-638/154, 8-17=-39/480, 9-17=-50/490, 9-15=-813/190, 11-15=-259/2085, 11-14=-2234/396

NOTES-
1) Unbalanced roof live loads have been considered for this design.
2) Wind: ASCE 7-10; Vult=130mph (3-second gust) Vasd=103mph; TCDL=6.0psf; BCDL=6.0psf; h=25ft; Cat. II; Exp B; Enclosed; MWFRS (envelope) gable end zone and C-C Exterior(2) -0-10-8 to 4-1-8, Interior(1) 4-1-8 to 19-10-0, Exterior(2) 19-10-0 to 26-10-14 , Interior(1) 26-10-14 to 30-2-0, Exterior(2) 30-2-0 to 37-2-14, Interior(1) 37-2-14 to 50-10-8 zone;C-C for members and forces & MWFRS for reactions shown; Lumber DOL=1.60 plate grip DOL=1.60
3) Provide adequate drainage to prevent water ponding.
4) This truss has been designed for a 10.0 psf bottom chord live load nonconcurrent with any other live loads.
5) * This truss has been designed for a live load of 20.0psf on the bottom chord in all areas where a rectangle 3-6-0 tall by 2-0-0 wide will fit between the bottom chord and any other members, with BCDL = 10.0psf.
6) One RT7A USP connectors recommended to connect truss to bearing walls due to UPLIFT at jt(s) 2, 14, and 12. This connection is for uplift only and does not consider lateral forces.
7) Graphical purlin representation does not depict the size or the orientation of the purlin along the top and/or bottom chord.

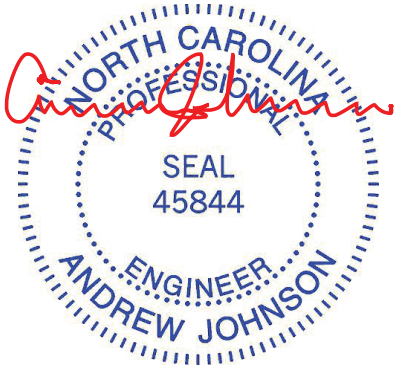

May 1,2019

WARNING - Verify design parameters and READ NOTES ON THIS AND INCLUDED MITEK REFERENCE PAGE MII-7473 rev. 10/03/2015 BEFORE USE.
Design valid for use only with MiTek® connectors. This design is based only upon parameters shown, and is for an individual building component, not a truss system. Before use, the building designer must verify the applicability of design parameters and properly incorporate this design into the overall building design. Bracing indicated is to prevent buckling of individual truss web and/or chord members only. Additional temporary and permanent bracing is always required for stability and to prevent collapse with possible personal injury and property damage. For general guidance regarding the fabrication, storage, delivery, erection and bracing of trusses and truss systems, see **ANSI/TPI1 Quality Criteria, DSB-89 and BCSI Building Component Safety Information** available from Truss Plate Institute, 218 N. Lee Street, Suite 312, Alexandria, VA 22314.

ENGINEERING BY TRENCO A MiTek Affiliate
818 Soundside Road
Edenton, NC 27932

Job	Truss	Truss Type	Qty	Ply	149.2115 C CVP
20595A	B2A	Piggyback Base	2	1	I36927198 Job Reference (optional)

84 Components (Dunn), Dunn, NC - 28334, 8.220 s Nov 16 2018 MiTek Industries, Inc. Tue Apr 30 16:11:51 2019 Page 1

ID:bNZHYySm82JAWDNgfw9uCLzLbIt-JzdJ2Ta2_ZDT9FEiWC8v6hPsOeKhNnuSdhIDL4zLTvc

6-11-11	13-4-13	19-10-0	25-0-0	30-2-0	36-7-3	43-0-5	43-4-4	50-0-0	50-10-8
6-11-11	6-5-3	6-5-3	5-2-0	5-2-0	6-5-3	6-5-3	0-3-15	6-7-12	0-10-8

Scale = 1:86.0

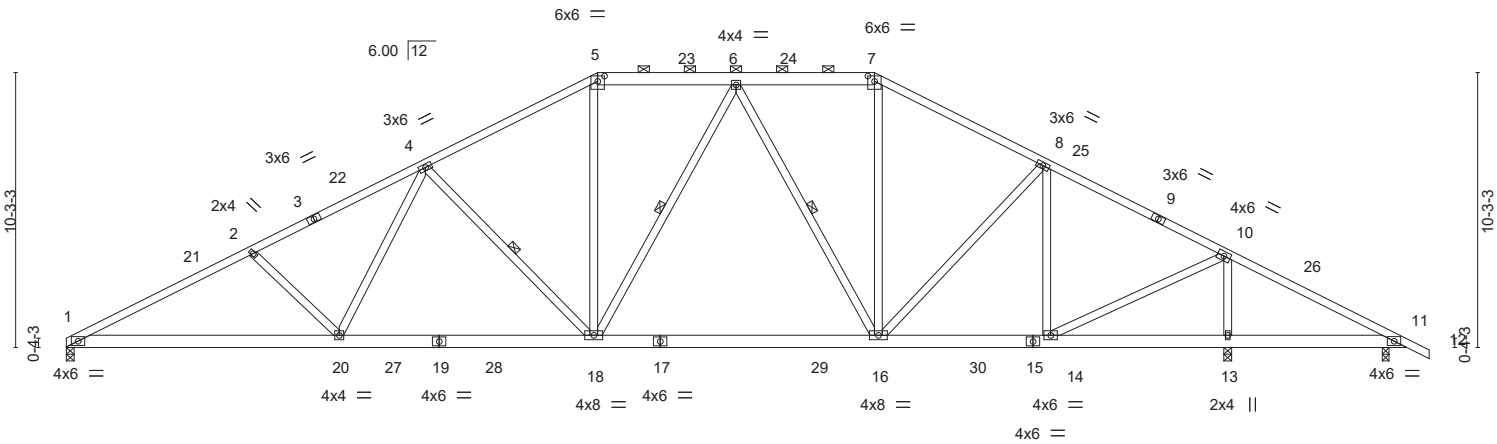

10-2-4	19-10-0	25-0-0	30-2-0	36-7-3	43-4-4	49-4-8	50-0-0
10-2-4	9-7-12	5-2-0	5-2-0	6-5-3	6-9-1	6-0-4	0-7-8

Plate Offsets (X,Y)-- [5:0-3-0,0-2-7], [7:0-3-0,0-2-7]

LOADING (psf)		**SPACING-** 2-0-0	**CSI.**		**DEFL.**	in	(loc)	l/defl	L/d	**PLATES**	**GRIP**
TCLL	20.0	Plate Grip DOL 1.15	TC	0.75	Vert(LL)	-0.20	16-18	>999	240	MT20	244/190
TCDL	10.0	Lumber DOL 1.15	BC	0.73	Vert(CT)	-0.38	16-18	>999	180		
BCLL	0.0 *	Rep Stress Incr YES	WB	0.84	Horz(CT)	0.07	13	n/a	n/a		
BCDL	10.0	Code IRC2015/TPI2014	Matrix-S							Weight: 336 lb	FT = 20%

LUMBER-

TOP CHORD 2x4 SP No.2 *Except*
5-7: 2x6 SP No.2, 1-3: 2x4 SP No.1
BOT CHORD 2x6 SP No.2
WEBS 2x4 SP No.3

BRACING-

TOP CHORD Structural wood sheathing directly applied or 2-2-0 oc purlins, except 2-0-0 oc purlins (5-4-7 max.): 5-7.
BOT CHORD Rigid ceiling directly applied or 6-0-0 oc bracing.
WEBS 1 Row at midpt 4-18, 6-18, 6-16

REACTIONS. (lb/size) 1=1672/0-3-8, 13=2415/0-3-8, 11=-49/0-3-0
Max Horz 1=-180(LC 17)
Max Uplift 1=-186(LC 12), 13=-184(LC 13), 11=-191(LC 25)
Max Grav 1=1672(LC 1), 13=2415(LC 1), 11=39(LC 24)

FORCES. (lb) - Max. Comp./Max. Ten. - All forces 250 (lb) or less except when shown.

TOP CHORD 1-2=-3226/486, 2-4=-2926/459, 4-5=-2147/437, 5-6=-1846/440, 6-7=-1498/395, 7-8=-1756/387, 8-10=-1438/288, 10-11=-116/772
BOT CHORD 1-20=-417/2810, 18-20=-234/2308, 16-18=-86/1746, 14-16=-82/1217, 13-14=-619/168, 11-13=-619/168
WEBS 2-20=-390/237, 4-20=-53/574, 4-18=-719/263, 5-18=-58/653, 6-18=-82/289, 6-16=-649/157, 7-16=-38/486, 8-16=-43/494, 8-14=-804/183, 10-14=-256/2040, 10-13=-2198/395

NOTES-

1) Unbalanced roof live loads have been considered for this design.
2) Wind: ASCE 7-10; Vult=130mph (3-second gust) Vasd=103mph; TCDL=6.0psf; BCDL=6.0psf; h=25ft; Cat. II; Exp B; Enclosed; MWFRS (envelope) gable end zone and C-C Exterior(2) 0-1-12 to 5-1-12, Interior(1) 5-1-12 to 19-10-0, Exterior(2) 19-10-0 to 26-10-14, Interior(1) 26-10-14 to 30-2-0, Exterior(2) 30-2-0 to 37-2-14, Interior(1) 37-2-14 to 50-10-8 zone;C-C for members and forces & MWFRS for reactions shown; Lumber DOL=1.60 plate grip DOL=1.60
3) Provide adequate drainage to prevent water ponding.
4) This truss has been designed for a 10.0 psf bottom chord live load nonconcurrent with any other live loads.
5) * This truss has been designed for a live load of 20.0psf on the bottom chord in all areas where a rectangle 3-6-0 tall by 2-0-0 wide will fit between the bottom chord and any other members, with BCDL = 10.0psf.
6) One RT7A USP connectors recommended to connect truss to bearing walls due to UPLIFT at jt(s) 1, 13, and 11. This connection is for uplift only and does not consider lateral forces.
7) Graphical purlin representation does not depict the size or the orientation of the purlin along the top and/or bottom chord.

May 1,2019

WARNING - Verify design parameters and READ NOTES ON THIS AND INCLUDED MITEK REFERENCE PAGE MII-7473 rev. 10/03/2015 BEFORE USE.
Design valid for use only with MiTek® connectors. This design is based only upon parameters shown, and is for an individual building component, not a truss system. Before use, the building designer must verify the applicability of design parameters and properly incorporate this design into the overall building design. Bracing indicated is to prevent buckling of individual truss web and/or chord members only. Additional temporary and permanent bracing is always required for stability and to prevent collapse with possible personal injury and property damage. For general guidance regarding the fabrication, storage, delivery, erection and bracing of trusses and truss systems, see **ANSI/TPI1 Quality Criteria, DSB-89 and BCSI Building Component Safety Information** available from Truss Plate Institute, 218 N. Lee Street, Suite 312, Alexandria, VA 22314.

ENGINEERING BY TRENCO A MiTek Affiliate
818 Soundside Road
Edenton, NC 27932

Job	Truss	Truss Type	Qty	Ply	149.2115 C CVP
20595A	B3	Piggyback Base	1	1	I36927199 Job Reference (optional)

84 Components (Dunn), Dunn, NC - 28334, 8.220 s Nov 16 2018 MiTek Industries, Inc. Tue Apr 30 16:11:53 2019 Page 1
ID:bNZHYySm82JAWDNgfw9uCLzLbIt-FLI4T9bIWATBOZO5ecANB6VCuS?DrhBl4?nKQzzLTva

6-11-11	13-4-13	19-10-0	25-0-0	30-2-0	36-7-3	43-0-5	43-4-4	50-0-0	50-10-8
6-11-11	6-5-3	6-5-3	5-2-0	5-2-0	6-5-3	6-5-3	0-3-15	6-7-12	0-10-8

Scale = 1:86.0

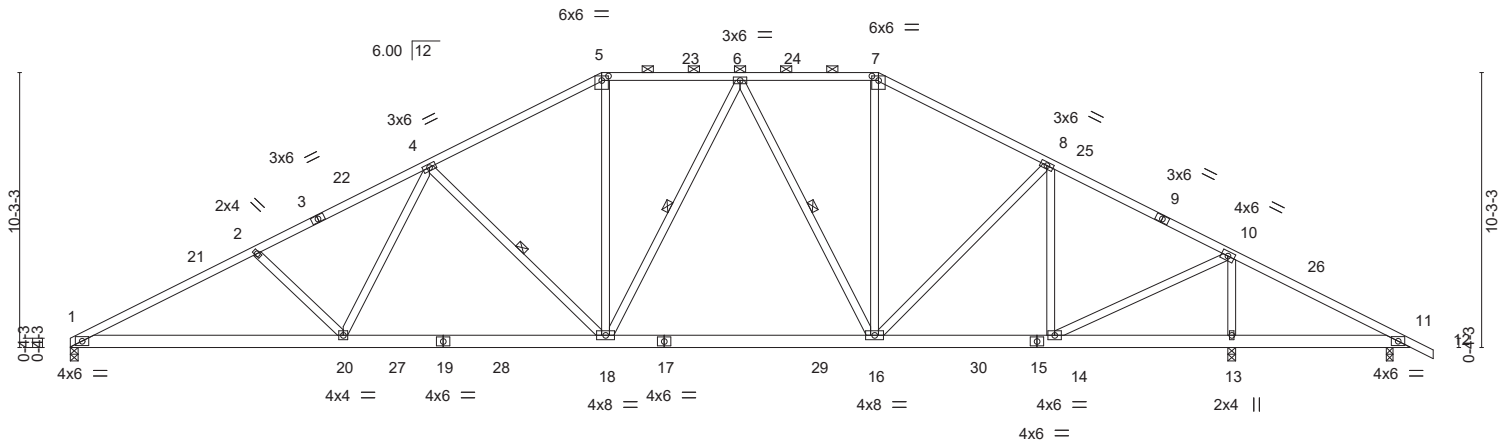

10-2-4	19-10-0	25-0-0	30-2-0	36-7-3	43-4-4	49-4-8	50-0-0
10-2-4	9-7-12	5-2-0	5-2-0	6-5-3	6-9-1	6-0-4	0-7-8

Plate Offsets (X,Y)-- [5:0-3-0,0-2-0], [7:0-3-0,0-2-0]

LOADING (psf)		**SPACING-** 2-0-0		**CSI.**		**DEFL.**	in	(loc)	l/defl	L/d	**PLATES**	**GRIP**
TCLL	20.0	Plate Grip DOL	1.15	TC	0.75	Vert(LL)	-0.19	16-18	>999	240	MT20	244/190
TCDL	10.0	Lumber DOL	1.15	BC	0.72	Vert(CT)	-0.35	16-18	>999	180		
BCLL	0.0 *	Rep Stress Incr	YES	WB	0.86	Horz(CT)	0.07	13	n/a	n/a		
BCDL	10.0	Code IRC2015/TPI2014		Matrix-S							Weight: 328 lb	FT = 20%

LUMBER-
TOP CHORD 2x4 SP No.2 *Except*
1-3: 2x4 SP No.1
BOT CHORD 2x6 SP No.2
WEBS 2x4 SP No.3

BRACING-
TOP CHORD Structural wood sheathing directly applied or 2-2-0 oc purlins, except 2-0-0 oc purlins (4-1-11 max.): 5-7.
BOT CHORD Rigid ceiling directly applied or 6-0-0 oc bracing.
WEBS 1 Row at midpt 4-18, 6-18, 6-16

REACTIONS. (lb/size) 1=1669/0-3-8, 13=2437/0-3-8, 11=-68/0-3-0
Max Horz 1=-181(LC 17)
Max Uplift 1=-185(LC 12), 13=-187(LC 13), 11=-209(LC 25)
Max Grav 1=1669(LC 1), 13=2437(LC 1), 11=36(LC 12)

FORCES. (lb) - Max. Comp./Max. Ten. - All forces 250 (lb) or less except when shown.
TOP CHORD 1-2=-3222/483, 2-4=-2924/457, 4-5=-2117/432, 5-6=-1831/436, 6-7=-1497/394, 7-8=-1746/386, 8-10=-1423/283, 10-11=-127/817
BOT CHORD 1-20=-415/2806, 18-20=-234/2303, 16-18=-80/1731, 14-16=-77/1204, 13-14=-659/177, 11-13=-659/177
WEBS 2-20=-389/236, 4-20=-48/586, 4-18=-742/267, 5-18=-58/643, 6-18=-79/296, 6-16=-637/154, 7-16=-40/483, 8-16=-49/484, 8-14=-807/192, 10-14=-262/2072, 10-13=-2222/399

NOTES-
1) Unbalanced roof live loads have been considered for this design.
2) Wind: ASCE 7-10; Vult=130mph (3-second gust) Vasd=103mph; TCDL=6.0psf; BCDL=6.0psf; h=25ft; Cat. II; Exp B; Enclosed; MWFRS (envelope) gable end zone and C-C Exterior(2) 0-1-12 to 5-1-12, Interior(1) 5-1-12 to 19-10-0, Exterior(2) 19-10-0 to 26-10-14, Interior(1) 26-10-14 to 30-2-0, Exterior(2) 30-2-0 to 37-2-14, Interior(1) 37-2-14 to 50-10-8 zone;C-C for members and forces & MWFRS for reactions shown; Lumber DOL=1.60 plate grip DOL=1.60
3) Provide adequate drainage to prevent water ponding.
4) This truss has been designed for a 10.0 psf bottom chord live load nonconcurrent with any other live loads.
5) * This truss has been designed for a live load of 20.0psf on the bottom chord in all areas where a rectangle 3-6-0 tall by 2-0-0 wide will fit between the bottom chord and any other members, with BCDL = 10.0psf.
6) One RT7A USP connectors recommended to connect truss to bearing walls due to UPLIFT at jt(s) 1, 13, and 11. This connection is for uplift only and does not consider lateral forces.
7) Graphical purlin representation does not depict the size or the orientation of the purlin along the top and/or bottom chord.

May 1,2019

WARNING - Verify design parameters and READ NOTES ON THIS AND INCLUDED MITEK REFERENCE PAGE MII-7473 rev. 10/03/2015 BEFORE USE.
Design valid for use only with MiTek® connectors. This design is based only upon parameters shown, and is for an individual building component, not a truss system. Before use, the building designer must verify the applicability of design parameters and properly incorporate this design into the overall building design. Bracing indicated is to prevent buckling of individual truss web and/or chord members only. Additional temporary and permanent bracing is always required for stability and to prevent collapse with possible personal injury and property damage. For general guidance regarding the fabrication, storage, delivery, erection and bracing of trusses and truss systems, see **ANSI/TPI1 Quality Criteria, DSB-89 and BCSI Building Component Safety Information** available from Truss Plate Institute, 218 N. Lee Street, Suite 312, Alexandria, VA 22314.

ENGINEERING BY TRENCO A MiTek Affiliate
818 Soundside Road
Edenton, NC 27932

Job	Truss	Truss Type	Qty	Ply	149.2115 C CVP
20595A	B4	HIP	1	1	I36927200 Job Reference (optional)

84 Components (Dunn), Dunn, NC - 28334, 8.220 s Nov 16 2018 MiTek Industries, Inc. Tue Apr 30 16:11:54 2019 Page 1
ID:bNZHYySm82JAWDNgfw9uCLzLbIt-jYJShVcwHUb20jzHCKhckJ1K4sKwZFZuJfXtyPzLTvZ

6-11-0	13-3-8	19-8-0	25-0-0	30-4-0	36-6-3	42-8-5	49-2-0
6-11-0	6-4-8	6-4-8	5-4-0	5-4-0	6-2-3	6-2-3	6-5-11

Scale = 1:86.3

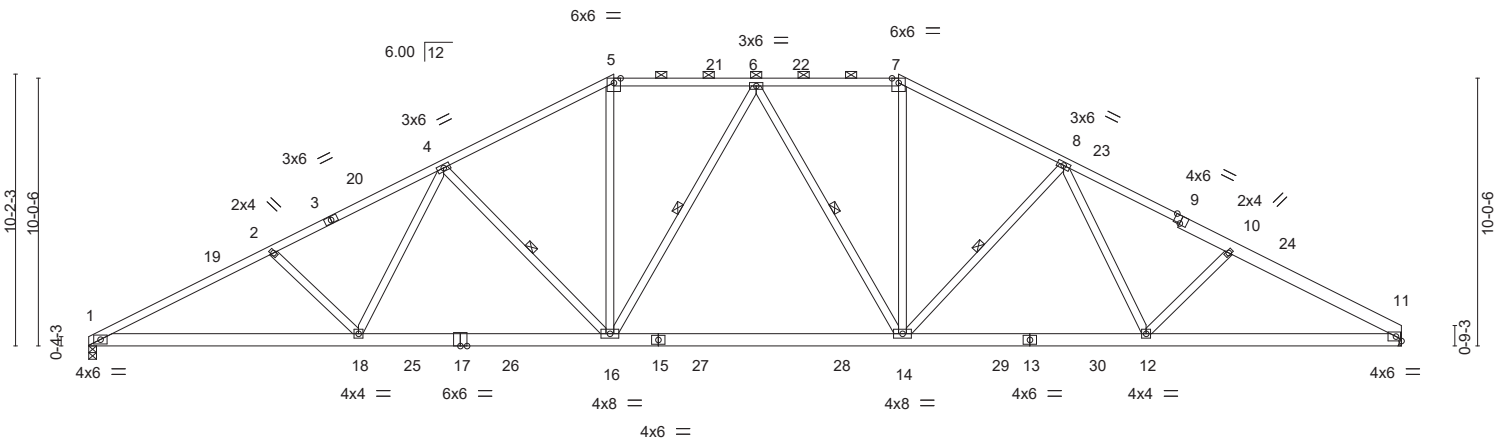

10-1-4	19-8-0	25-0-0	30-4-0	39-7-4	49-2-0
10-1-4	9-6-12	5-4-0	5-4-0	9-3-4	9-6-12

Plate Offsets (X,Y)-- [9:0-3-0,Edge]

LOADING (psf)		**SPACING-** 2-0-0	**CSI.**		**DEFL.** in (loc) l/defl L/d	**PLATES**	**GRIP**
TCLL	20.0	Plate Grip DOL 1.15	TC	0.92	Vert(LL) -0.30 14-16 >999 240	MT20	244/190
TCDL	10.0	Lumber DOL 1.15	BC	0.82	Vert(CT) -0.58 14-16 >999 180		
BCLL	0.0 *	Rep Stress Incr YES	WB	0.40	Horz(CT) 0.15 11 n/a n/a		
BCDL	10.0	Code IRC2015/TPI2014	Matrix-S			Weight: 323 lb	FT = 20%

LUMBER-
TOP CHORD 2x4 SP No.2 *Except*
1-3: 2x4 SP No.1, 9-11: 2x6 SP No.2
BOT CHORD 2x6 SP No.2
WEBS 2x4 SP No.3

BRACING-
TOP CHORD Structural wood sheathing directly applied, except
2-0-0 oc purlins (3-5-14 max.): 5-7.
BOT CHORD Rigid ceiling directly applied or 10-0-0 oc bracing.
WEBS 1 Row at midpt 4-16, 6-16, 6-14, 8-14

REACTIONS. (lb/size) 1=1958/0-3-8, 11=1958/Mechanical
Max Horz 1=162(LC 12)
Max Uplift 1=-195(LC 12), 11=-187(LC 13)

FORCES. (lb) - Max. Comp./Max. Ten. - All forces 250 (lb) or less except when shown.
TOP CHORD 1-2=-3862/568, 2-4=-3577/543, 4-5=-2821/522, 5-6=-2452/514, 6-7=-2419/509,
7-8=-2778/518, 8-10=-3388/528, 10-11=-3600/541
BOT CHORD 1-18=-440/3377, 16-18=-335/2900, 14-16=-214/2531, 12-14=-308/2778, 11-12=-393/3097
WEBS 2-18=-383/234, 4-18=-52/562, 4-16=-699/262, 5-16=-99/967, 6-16=-378/164,
6-14=-434/162, 7-14=-99/948, 8-14=-590/249, 8-12=-51/458, 10-12=-263/222

NOTES-
1) Unbalanced roof live loads have been considered for this design.
2) Wind: ASCE 7-10; Vult=130mph (3-second gust) Vasd=103mph; TCDL=6.0psf; BCDL=6.0psf; h=25ft; Cat. II; Exp B; Enclosed; MWFRS (envelope) gable end zone and C-C Exterior(2) 0-1-12 to 5-0-12, Interior(1) 5-0-12 to 19-8-0, Exterior(2) 19-8-0 to 26-7-7, Interior(1) 26-7-7 to 30-4-0, Exterior(2) 30-4-0 to 37-3-7, Interior(1) 37-3-7 to 49-1-4 zone;C-C for members and forces & MWFRS for reactions shown; Lumber DOL=1.60 plate grip DOL=1.60
3) Provide adequate drainage to prevent water ponding.
4) This truss has been designed for a 10.0 psf bottom chord live load nonconcurrent with any other live loads.
5) * This truss has been designed for a live load of 20.0psf on the bottom chord in all areas where a rectangle 3-6-0 tall by 2-0-0 wide will fit between the bottom chord and any other members, with BCDL = 10.0psf.
6) Refer to girder(s) for truss to truss connections.
7) Provide mechanical connection (by others) of truss to bearing plate capable of withstanding 100 lb uplift at joint(s) except (jt=lb) 11=187.
8) One RT7A USP connectors recommended to connect truss to bearing walls due to UPLIFT at jt(s) 1. This connection is for uplift only and does not consider lateral forces.
9) Graphical purlin representation does not depict the size or the orientation of the purlin along the top and/or bottom chord.

May 1,2019

WARNING - Verify design parameters and READ NOTES ON THIS AND INCLUDED MITEK REFERENCE PAGE MII-7473 rev. 10/03/2015 BEFORE USE.
Design valid for use only with MiTek® connectors. This design is based only upon parameters shown, and is for an individual building component, not a truss system. Before use, the building designer must verify the applicability of design parameters and properly incorporate this design into the overall building design. Bracing indicated is to prevent buckling of individual truss web and/or chord members only. Additional temporary and permanent bracing is always required for stability and to prevent collapse with possible personal injury and property damage. For general guidance regarding the fabrication, storage, delivery, erection and bracing of trusses and truss systems, see **ANSI/TPI1 Quality Criteria, DSB-89 and BCSI Building Component Safety Information** available from Truss Plate Institute, 218 N. Lee Street, Suite 312, Alexandria, VA 22314.

ENGINEERING BY TRENCO A MiTek Affiliate
818 Soundside Road
Edenton, NC 27932

Job	Truss	Truss Type	Qty	Ply	149.2115 C CVP
20595A	H1	ROOF TRUSS	1	1	I36927201 Job Reference (optional)

84 Components (Dunn), Dunn, NC - 28334, 8.220 s Nov 16 2018 MiTek Industries, Inc. Tue Apr 30 16:11:55 2019 Page 1

ID:bNZHYySm82JAWDNgfw9uCLzLbIt-BktquqdY2nkvesYTl1DrHXaVeFeSIdM2YJGQUrzLTvY

-0-10-8	6-11-11	13-4-13	19-10-0	25-0-0	30-2-0	36-7-3	43-0-5	50-0-0
0-10-8	6-11-11	6-5-3	6-5-3	5-2-0	5-2-0	6-5-3	6-5-3	6-11-11

Scale = 1:90.7

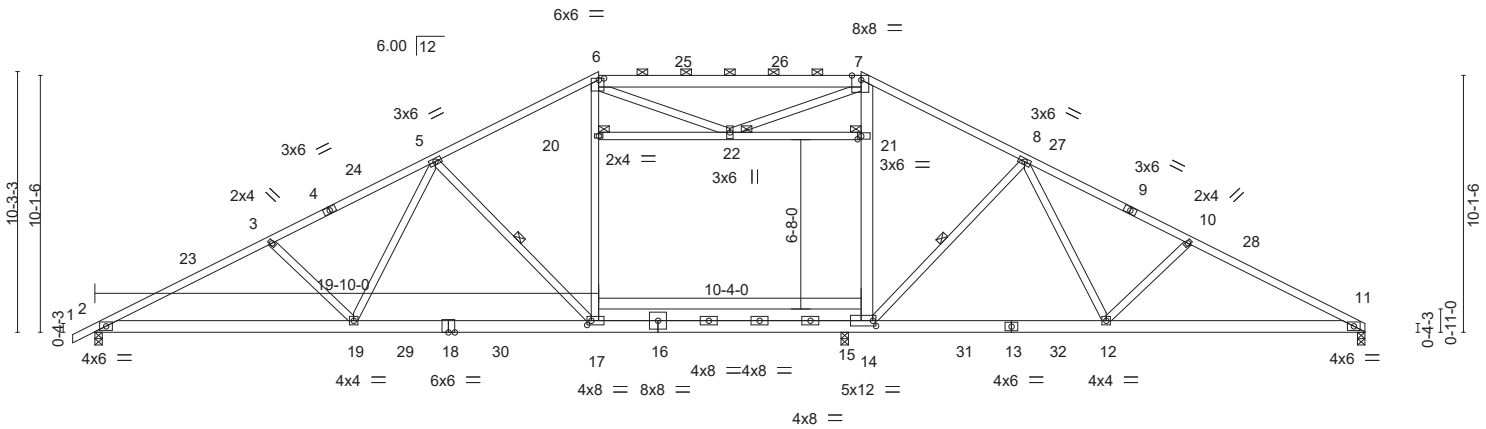

10-2-4	19-10-0	25-0-0	29-8-0	30-2-0	39-9-12	50-0-0
10-2-4	9-7-12	5-2-0	4-8-0	0-6-0	9-7-12	10-2-4

Plate Offsets (X,Y)-- [6:0-2-8,0-0-12], [7:0-4-6,Edge], [14:0-1-8,0-2-8], [16:0-0-0,0-2-12], [17:0-2-0,0-2-0], [21:0-1-12,0-1-8]

LOADING (psf)		SPACING- 2-0-0		CSI.		DEFL.	in	(loc)	l/defl	L/d	PLATES	GRIP
TCLL	20.0	Plate Grip DOL	1.15	TC	0.93	Vert(LL)	-0.50	17-19	>710	240	MT20	244/190
TCDL	10.0	Lumber DOL	1.15	BC	0.93	Vert(CT)	-0.91	17-19	>389	180		
BCLL	0.0 *	Rep Stress Incr	YES	WB	0.75	Horz(CT)	0.10	11	n/a	n/a		
BCDL	10.0	Code IRC2015/TPI2014		Matrix-S		Attic	0.06	14-15	361	360	Weight: 361 lb	FT = 20%

LUMBER-

TOP CHORD 2x4 SP No.2 *Except*
6-7: 2x6 SP DSS
BOT CHORD 2x6 SP DSS *Except*
14-17,16-18: 2x6 SP No.2
WEBS 2x4 SP No.3 *Except*
6-17: 2x4 SP No.2, 7-14: 2x6 SP DSS

BRACING-

TOP CHORD Structural wood sheathing directly applied, except 2-0-0 oc purlins (5-0-8 max.): 6-7.
BOT CHORD Rigid ceiling directly applied or 10-0-0 oc bracing, Except: 2-2-0 oc bracing: 17-19.
WEBS 1 Row at midpt 5-17, 8-14
JOINTS 1 Brace at Jt(s): 20, 21, 22

REACTIONS. (lb/size) 2=1819/0-3-8, 11=1630/0-3-8, 15=696/0-3-8
Max Horz 2=179(LC 16)
Max Uplift 2=-251(LC 12), 11=-90(LC 12), 15=-197(LC 13)
Max Grav 2=1961(LC 26), 11=1728(LC 2), 15=1019(LC 27)

FORCES. (lb) - Max. Comp./Max. Ten. - All forces 250 (lb) or less except when shown.

TOP CHORD 2-3=-3830/478, 3-5=-3587/466, 5-6=-2731/439, 6-7=-2167/369, 7-8=-2508/437, 8-10=-3114/453, 10-11=-3365/480
BOT CHORD 2-19=-499/3354, 17-19=-318/2866, 15-17=-135/2380, 14-15=-127/2302, 12-14=-199/2533, 11-12=-345/2946
WEBS 3-19=-367/225, 5-19=-54/651, 5-17=-757/262, 17-20=-63/852, 6-20=-51/870, 14-21=-82/531, 7-21=-75/597, 8-14=-653/273, 8-12=-69/525, 10-12=-397/238, 21-22=-583/64, 6-22=-262/92, 7-22=0/421

NOTES-

1) Unbalanced roof live loads have been considered for this design.
2) Wind: ASCE 7-10; Vult=130mph (3-second gust) Vasd=103mph; TCDL=6.0psf; BCDL=6.0psf; h=25ft; Cat. II; Exp B; Enclosed; MWFRS (envelope) gable end zone and C-C Exterior(2) -0-10-8 to 4-1-8, Interior(1) 4-1-8 to 19-10-0, Exterior(2) 19-10-0 to 26-10-14 , Interior(1) 26-10-14 to 30-2-0, Exterior(2) 30-2-0 to 37-2-14, Interior(1) 37-2-14 to 49-10-4 zone;C-C for members and forces & MWFRS for reactions shown; Lumber DOL=1.60 plate grip DOL=1.60
3) Provide adequate drainage to prevent water ponding.
4) This truss has been designed for a 10.0 psf bottom chord live load nonconcurrent with any other live loads.
5) * This truss has been designed for a live load of 20.0psf on the bottom chord in all areas where a rectangle 3-6-0 tall by 2-0-0 wide will fit between the bottom chord and any other members, with BCDL = 10.0psf.
6) Ceiling dead load (5.0 psf) on member(s). 20-22, 21-22
7) Bottom chord live load (40.0 psf) and additional bottom chord dead load (0.0 psf) applied only to room. 15-17, 14-15
8) One RT7A USP connectors recommended to connect truss to bearing walls due to UPLIFT at jt(s) 2, 11, and 15. This connection is for uplift only and does not consider lateral forces.
9) Graphical purlin representation does not depict the size or the orientation of the purlin along the top and/or bottom chord.
10) ATTIC SPACE SHOWN IS DESIGNED AS UNINHABITABLE.

May 1,2019

WARNING - Verify design parameters and READ NOTES ON THIS AND INCLUDED MITEK REFERENCE PAGE MII-7473 rev. 10/03/2015 BEFORE USE.
Design valid for use only with MiTek® connectors. This design is based only upon parameters shown, and is for an individual building component, not a truss system. Before use, the building designer must verify the applicability of design parameters and properly incorporate this design into the overall building design. Bracing indicated is to prevent buckling of individual truss web and/or chord members only. Additional temporary and permanent bracing is always required for stability and to prevent collapse with possible personal injury and property damage. For general guidance regarding the fabrication, storage, delivery, erection and bracing of trusses and truss systems, see **ANSI/TPI1 Quality Criteria, DSB-89 and BCSI Building Component Safety Information** available from Truss Plate Institute, 218 N. Lee Street, Suite 312, Alexandria, VA 22314.

ENGINEERING BY TRENCO A MiTek Affiliate
818 Soundside Road
Edenton, NC 27932

Job	Truss	Truss Type	Qty	Ply	149.2115 C CVP
20595A	H2	ROOF TRUSS	1	1	I36927202 Job Reference (optional)

84 Components (Dunn), Dunn, NC - 28334, 8.220 s Nov 16 2018 MiTek Industries, Inc. Tue Apr 30 16:11:56 2019 Page 1

ID:bNZHYySm82JAWDNgfw9uCLzLbIt-gwRC5AeAp5sIF07gJlk4pk7fNf?3110Bnz0_1IzLTvX

-0-10-8	6-1-0	11-7-8	17-2-0	19-10-0	25-0-0	29-6-4	32-10-0	38-4-8	43-11-0	50-0-0
0-10-8	6-1-0	5-6-8	5-6-8	2-8-0	5-2-0	4-6-4	3-3-12	5-6-8	5-6-8	6-1-0

Scale = 1:89.8

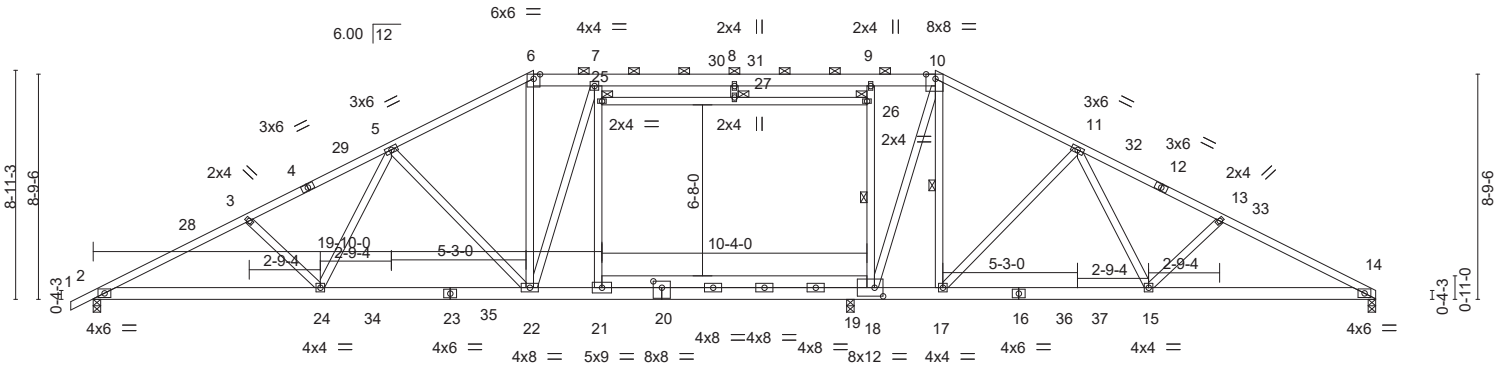

8-10-4	17-2-0	19-10-0	25-0-0	29-6-4	32-10-0	41-1-12	50-0-0
8-10-4	8-3-12	2-8-0	5-2-0	4-6-4	3-3-12	8-3-12	8-10-4

Plate Offsets (X,Y)-- [10:0-4-6,Edge], [18:0-4-0,0-4-0], [20:0-0-0,0-2-12], [20:0-4-0,0-3-0]

LOADING (psf)		SPACING- 2-0-0		CSI.		DEFL.	in	(loc)	l/defl	L/d	PLATES	GRIP
TCLL	20.0	Plate Grip DOL	1.15	TC	0.99	Vert(LL)	-0.39	21-22	>908	240	MT20	244/190
TCDL	10.0	Lumber DOL	1.15	BC	0.84	Vert(CT)	-0.71	21-22	>497	180		
BCLL	0.0 *	Rep Stress Incr	YES	WB	0.92	Horz(CT)	0.08	14	n/a	n/a		
BCDL	10.0	Code IRC2015/TPI2014		Matrix-S		Attic	0.04	18-19	494	360	Weight: 376 lb	FT = 20%

LUMBER-

TOP CHORD 2x4 SP No.2 *Except*
6-10: 2x6 SP No.2
BOT CHORD 2x6 SP DSS
WEBS 2x4 SP No.3

BRACING-

TOP CHORD Structural wood sheathing directly applied or 2-8-11 oc purlins, except
2-0-0 oc purlins (2-2-0 max.): 6-10.
BOT CHORD Rigid ceiling directly applied or 10-0-0 oc bracing, Except:
6-9-12 oc bracing: 17-18.
WEBS 1 Row at midpt 18-26, 10-17
JOINTS 1 Brace at Jt(s): 25, 26, 27

REACTIONS. (lb/size) 2=1698/0-3-8, 14=1455/0-3-8, 19=992/0-3-8
Max Horz 2=157(LC 16)
Max Uplift 2=-205(LC 12), 14=-71(LC 13), 19=-119(LC 13)
Max Grav 2=1783(LC 26), 14=1496(LC 2), 19=1239(LC 27)

FORCES. (lb) - Max. Comp./Max. Ten. - All forces 250 (lb) or less except when shown.

TOP CHORD 2-3=-3437/431, 3-5=-3227/421, 5-6=-2613/411, 6-7=-2282/409, 7-8=-2198/380, 8-9=-2198/380, 9-10=-2243/390, 10-11=-2047/351, 11-13=-2734/382, 13-14=-2947/407
BOT CHORD 2-24=-396/3012, 22-24=-254/2643, 21-22=-154/2223, 19-21=-154/2247, 18-19=-142/2198, 17-18=-77/1787, 15-17=-153/2172, 14-15=-290/2578
WEBS 3-24=-316/195, 5-24=-33/486, 5-22=-570/216, 6-22=-101/932, 7-22=-114/377, 18-26=-986/235, 9-26=-948/242, 10-18=-267/1592, 10-17=-325/202, 11-17=-624/222, 11-15=-40/528, 13-15=-331/206, 21-25=-765/193, 7-25=-727/201

NOTES-

1) Unbalanced roof live loads have been considered for this design.
2) Wind: ASCE 7-10; Vult=130mph (3-second gust) Vasd=103mph; TCDL=6.0psf; BCDL=6.0psf; h=25ft; Cat. II; Exp B; Enclosed; MWFRS (envelope) gable end zone and C-C Exterior(2) -0-10-8 to 4-1-8, Interior(1) 4-1-8 to 17-2-0, Exterior(2) 17-2-0 to 24-2-14, Interior(1) 24-2-14 to 32-10-0, Exterior(2) 32-10-0 to 39-10-14, Interior(1) 39-10-14 to 49-10-4 zone;C-C for members and forces & MWFRS for reactions shown; Lumber DOL=1.60 plate grip DOL=1.60
3) Provide adequate drainage to prevent water ponding.
4) This truss has been designed for a 10.0 psf bottom chord live load nonconcurrent with any other live loads.
5) * This truss has been designed for a live load of 20.0psf on the bottom chord in all areas where a rectangle 3-6-0 tall by 2-0-0 wide will fit between the bottom chord and any other members, with BCDL = 10.0psf.
6) Ceiling dead load (5.0 psf) on member(s). 25-27, 26-27
7) Bottom chord live load (40.0 psf) and additional bottom chord dead load (0.0 psf) applied only to room. 19-21, 18-19
8) One RT7A USP connectors recommended to connect truss to bearing walls due to UPLIFT at jt(s) 2, 14, and 19. This connection is for uplift only and does not consider lateral forces.
9) Graphical purlin representation does not depict the size or the orientation of the purlin along the top and/or bottom chord.
10) ATTIC SPACE SHOWN IS DESIGNED AS UNINHABITABLE.

May 1,2019

WARNING - Verify design parameters and READ NOTES ON THIS AND INCLUDED MITEK REFERENCE PAGE MII-7473 rev. 10/03/2015 BEFORE USE.

Design valid for use only with MiTek® connectors. This design is based only upon parameters shown, and is for an individual building component, not a truss system. Before use, the building designer must verify the applicability of design parameters and properly incorporate this design into the overall building design. Bracing indicated is to prevent buckling of individual truss web and/or chord members only. Additional temporary and permanent bracing is always required for stability and to prevent collapse with possible personal injury and property damage. For general guidance regarding the fabrication, storage, delivery, erection and bracing of trusses and truss systems, see **ANSI/TPI1 Quality Criteria, DSB-89 and BCSI Building Component Safety Information** available from Truss Plate Institute, 218 N. Lee Street, Suite 312, Alexandria, VA 22314.

ENGINEERING BY TRENCO A MiTek Affiliate
818 Soundside Road
Edenton, NC 27932

Job	Truss	Truss Type	Qty	Ply	149.2115 C CVP
20595A	H3	Hip	1	1	I36927203 Job Reference (optional)

84 Components (Dunn), Dunn, NC - 28334, 8.220 s Nov 16 2018 MiTek Industries, Inc. Tue Apr 30 16:11:57 2019 Page 1

ID:bNZHYySm82JAWDNgfw9uCLzLbIt-87?aJWepaP_ctAistSFJMyfrU3RJmVeK?clXZkzLTvW

-0-10-8	7-6-4	14-6-0	21-11-4	28-6-0	29-6-4	35-6-0	42-5-12	50-0-0
0-10-8	7-6-4	6-11-12	7-5-4	6-6-12	1-0-4	5-11-12	6-11-12	7-6-4

Scale = 1:89.8

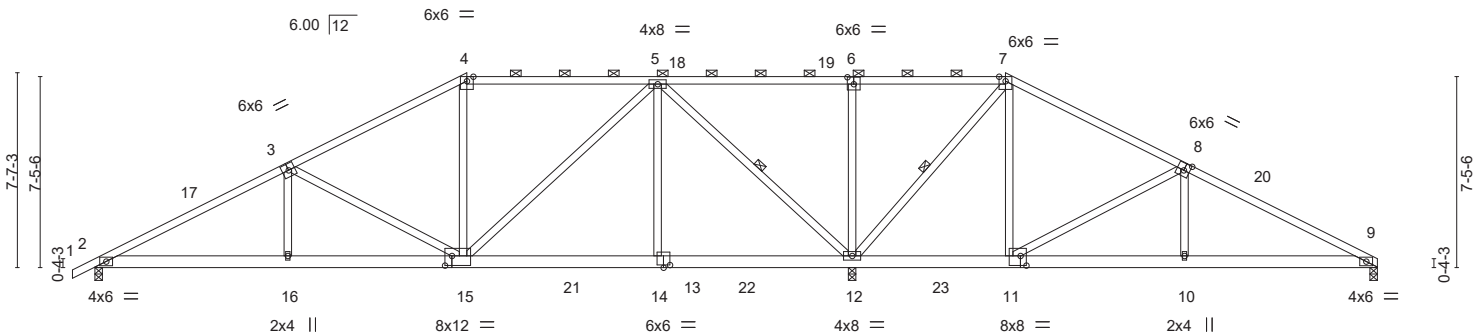

7-6-4	14-6-0	21-11-4	29-6-4	35-6-0	42-5-12	50-0-0
7-6-4	6-11-12	7-5-4	7-7-0	5-11-12	6-11-12	7-6-4

Plate Offsets (X,Y)-- [6:0-3-0,0-3-4], [8:0-2-12,0-3-4], [11:0-2-12,0-4-8], [13:0-0-0,0-2-12], [14:0-3-0,0-1-4], [14:0-1-12,0-0-0], [15:0-3-4,0-4-8]

LOADING (psf)		SPACING-	2-0-0	CSI.		DEFL.	in	(loc)	l/defl	L/d	PLATES	GRIP
TCLL	20.0	Plate Grip DOL	1.15	TC	0.90	Vert(LL)	-0.06	16	>999	240	MT20	244/190
TCDL	10.0	Lumber DOL	1.15	BC	0.46	Vert(CT)	-0.12	2-16	>999	180		
BCLL	0.0 *	Rep Stress Incr	YES	WB	0.89	Horz(CT)	0.03	9	n/a	n/a		
BCDL	10.0	Code IRC2015/TPI2014		Matrix-S							Weight: 313 lb	FT = 20%

LUMBER-

TOP CHORD 2x4 SP No.2
BOT CHORD 2x6 SP No.2
WEBS 2x4 SP No.3

BRACING-

TOP CHORD Structural wood sheathing directly applied or 3-8-6 oc purlins, except 2-0-0 oc purlins (5-2-0 max.): 4-7.
BOT CHORD Rigid ceiling directly applied or 10-0-0 oc bracing, Except: 6-0-0 oc bracing: 11-12.
WEBS 1 Row at midpt 5-12, 7-12

REACTIONS. (lb/size) 2=1009/0-3-8, 12=2546/0-3-8, 9=483/0-3-8
Max Horz 2=135(LC 12)
Max Uplift 2=-143(LC 12), 12=-197(LC 9), 9=-113(LC 13)
Max Grav 2=1044(LC 23), 12=2546(LC 1), 9=539(LC 24)

FORCES. (lb) - Max. Comp./Max. Ten. - All forces 250 (lb) or less except when shown.
TOP CHORD 2-3=-1731/256, 3-4=-1056/216, 4-5=-857/246, 5-6=-29/894, 6-7=-26/892, 7-8=-58/286, 8-9=-764/189
BOT CHORD 2-16=-218/1464, 15-16=-218/1466, 14-15=-80/445, 12-14=-80/445, 10-11=-86/608, 9-10=-87/607
WEBS 3-16=0/313, 3-15=-695/232, 5-15=-132/681, 5-14=0/369, 5-12=-1622/241, 6-12=-427/193, 7-12=-1128/201, 7-11=-37/483, 8-11=-745/233, 8-10=0/333

NOTES-

1) Unbalanced roof live loads have been considered for this design.
2) Wind: ASCE 7-10; Vult=130mph (3-second gust) Vasd=103mph; TCDL=6.0psf; BCDL=6.0psf; h=25ft; Cat. II; Exp B; Enclosed; MWFRS (envelope) gable end zone and C-C Exterior(2) -0-10-8 to 4-1-8, Interior(1) 4-1-8 to 14-6-0, Exterior(2) 14-6-0 to 21-6-14, Interior(1) 21-6-14 to 35-6-0, Exterior(2) 35-6-0 to 42-6-3, Interior(1) 42-6-3 to 49-10-4 zone;C-C for members and forces & MWFRS for reactions shown; Lumber DOL=1.60 plate grip DOL=1.60
3) Provide adequate drainage to prevent water ponding.
4) This truss has been designed for a 10.0 psf bottom chord live load nonconcurrent with any other live loads.
5) * This truss has been designed for a live load of 20.0psf on the bottom chord in all areas where a rectangle 3-6-0 tall by 2-0-0 wide will fit between the bottom chord and any other members, with BCDL = 10.0psf.
6) One RT7A USP connectors recommended to connect truss to bearing walls due to UPLIFT at jt(s) 2, 12, and 9. This connection is for uplift only and does not consider lateral forces.
7) Graphical purlin representation does not depict the size or the orientation of the purlin along the top and/or bottom chord.

May 1,2019

WARNING - Verify design parameters and READ NOTES ON THIS AND INCLUDED MITEK REFERENCE PAGE MII-7473 rev. 10/03/2015 BEFORE USE.
Design valid for use only with MiTek® connectors. This design is based only upon parameters shown, and is for an individual building component, not a truss system. Before use, the building designer must verify the applicability of design parameters and properly incorporate this design into the overall building design. Bracing indicated is to prevent buckling of individual truss web and/or chord members only. Additional temporary and permanent bracing is always required for stability and to prevent collapse with possible personal injury and property damage. For general guidance regarding the fabrication, storage, delivery, erection and bracing of trusses and truss systems, see **ANSI/TPI1 Quality Criteria, DSB-89 and BCSI Building Component Safety Information** available from Truss Plate Institute, 218 N. Lee Street, Suite 312, Alexandria, VA 22314.

ENGINEERING BY TRENCO A MiTek Affiliate
818 Soundside Road
Edenton, NC 27932

Job	Truss	Truss Type	Qty	Ply	149.2115 C CVP
20595A	H4	Hip	1	1	I36927204 Job Reference (optional)

84 Components (Dunn), Dunn, NC - 28334, 8.220 s Nov 16 2018 MiTek Industries, Inc. Tue Apr 30 16:11:59 2019 Page 1

ID:bNZHYySm82JAWDNgfw9uCLzLbIt-4V6LkCg360EK6UrF_tHnRNlFWt8YEQPdTwEeddzLTvU

-0-10-8	6-2-4	11-10-0	18-5-0	20-7-4	25-0-0	29-6-4	31-7-0	38-2-0	43-9-12	50-0-0
0-10-8	6-2-4	5-7-12	6-7-0	2-2-4	4-4-12	4-6-4	2-0-12	6-7-0	5-7-12	6-2-4

Scale = 1:88.3

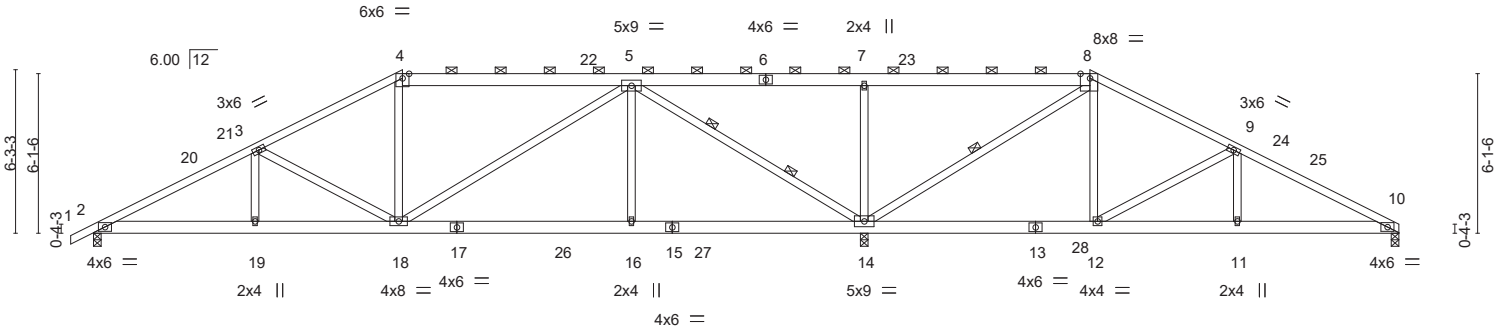

6-2-4	11-10-0	20-7-4	29-6-4	38-2-0	43-9-12	50-0-0
6-2-4	5-7-12	8-9-4	8-11-0	8-7-12	5-7-12	6-2-4

Plate Offsets (X,Y)-- [8:0-4-6,Edge]

LOADING (psf)		SPACING-	2-0-0	CSI.		DEFL.	in	(loc)	l/defl	L/d	PLATES	GRIP
TCLL	20.0	Plate Grip DOL	1.15	TC	0.61	Vert(LL)	-0.06	16-18	>999	240	MT20	244/190
TCDL	10.0	Lumber DOL	1.15	BC	0.41	Vert(CT)	-0.15	16-18	>999	180		
BCLL	0.0 *	Rep Stress Incr	YES	WB	0.81	Horz(CT)	0.04	10	n/a	n/a		
BCDL	10.0	Code IRC2015/TPI2014		Matrix-S							Weight: 322 lb	FT = 20%

LUMBER-

TOP CHORD 2x4 SP No.2 *Except*
4-6,6-8: 2x6 SP No.2
BOT CHORD 2x6 SP No.2
WEBS 2x4 SP No.3

BRACING-

TOP CHORD Structural wood sheathing directly applied or 3-11-3 oc purlins, except
2-0-0 oc purlins (6-0-0 max.): 4-8.
BOT CHORD Rigid ceiling directly applied or 10-0-0 oc bracing.
WEBS 1 Row at midpt 8-14
2 Rows at 1/3 pts 5-14

REACTIONS. (lb/size) 10=530/0-3-8, 2=1041/0-3-8, 14=2467/0-3-8
Max Horz 2=112(LC 16)
Max Uplift 10=-110(LC 13), 2=-131(LC 12), 14=-276(LC 9)
Max Grav 10=565(LC 24), 2=1063(LC 23), 14=2467(LC 1)

FORCES. (lb) - Max. Comp./Max. Ten. - All forces 250 (lb) or less except when shown.
TOP CHORD 2-3=-1826/297, 3-4=-1325/252, 4-5=-1123/269, 5-7=-43/898, 7-8=-42/901, 8-9=-341/140, 9-10=-882/192
BOT CHORD 2-19=-219/1561, 18-19=-219/1561, 16-18=-132/762, 14-16=-132/762, 11-12=-103/724, 10-11=-103/724
WEBS 3-18=-502/187, 4-18=0/276, 5-18=-103/480, 5-16=0/369, 5-14=-1857/267, 7-14=-575/255, 8-14=-1263/214, 8-12=-5/471, 9-12=-564/191

NOTES-

1) Unbalanced roof live loads have been considered for this design.
2) Wind: ASCE 7-10; Vult=130mph (3-second gust) Vasd=103mph; TCDL=6.0psf; BCDL=6.0psf; h=25ft; Cat. II; Exp B; Enclosed; MWFRS (envelope) gable end zone and C-C Exterior(2) -0-10-8 to 4-1-8, Interior(1) 4-1-8 to 11-10-0, Exterior(2) 11-10-0 to 18-10-14 , Interior(1) 18-10-14 to 38-2-0, Exterior(2) 38-2-0 to 45-2-14, Interior(1) 45-2-14 to 49-10-4 zone;C-C for members and forces & MWFRS for reactions shown; Lumber DOL=1.60 plate grip DOL=1.60
3) Provide adequate drainage to prevent water ponding.
4) This truss has been designed for a 10.0 psf bottom chord live load nonconcurrent with any other live loads.
5) * This truss has been designed for a live load of 20.0psf on the bottom chord in all areas where a rectangle 3-6-0 tall by 2-0-0 wide will fit between the bottom chord and any other members, with BCDL = 10.0psf.
6) One RT7A USP connectors recommended to connect truss to bearing walls due to UPLIFT at jt(s) 10, 2, and 14. This connection is for uplift only and does not consider lateral forces.
7) Graphical purlin representation does not depict the size or the orientation of the purlin along the top and/or bottom chord.

NORTH CAROLINA PROFESSIONAL SEAL 45844 ENGINEER ANDREW JOHNSON

May 1,2019

WARNING - Verify design parameters and READ NOTES ON THIS AND INCLUDED MITEK REFERENCE PAGE MII-7473 rev. 10/03/2015 BEFORE USE.

Design valid for use only with MiTek® connectors. This design is based only upon parameters shown, and is for an individual building component, not a truss system. Before use, the building designer must verify the applicability of design parameters and properly incorporate this design into the overall building design. Bracing indicated is to prevent buckling of individual truss web and/or chord members only. Additional temporary and permanent bracing is always required for stability and to prevent collapse with possible personal injury and property damage. For general guidance regarding the fabrication, storage, delivery, erection and bracing of trusses and truss systems, see **ANSI/TPI1 Quality Criteria, DSB-89 and BCSI Building Component Safety Information** available from Truss Plate Institute, 218 N. Lee Street, Suite 312, Alexandria, VA 22314.

ENGINEERING BY TRENCO A MiTek Affiliate

818 Soundside Road
Edenton, NC 27932

Job	Truss	Truss Type	Qty	Ply	149.2115 C CVP
20595A	H5	Hip	1	1	I36927205 Job Reference (optional)

84 Components (Dunn), Dunn, NC - 28334, 8.220 s Nov 16 2018 MiTek Industries, Inc. Tue Apr 30 16:12:00 2019 Page 1

ID:bNZHYySm82JAWDNgfw9uCLzLbIt-YhgjxYhhsKMBkeQRYbo0_aHMZGTGzrFnha_BA3zLTvT

-0-10-8	4-10-4	9-2-0	17-1-0	25-0-0	29-6-4	32-11-0	40-10-0	45-1-12	50-0-0
0-10-8	4-10-4	4-3-12	7-11-0	7-11-0	4-6-4	3-4-12	7-11-0	4-3-12	4-10-4

Scale = 1:88.3

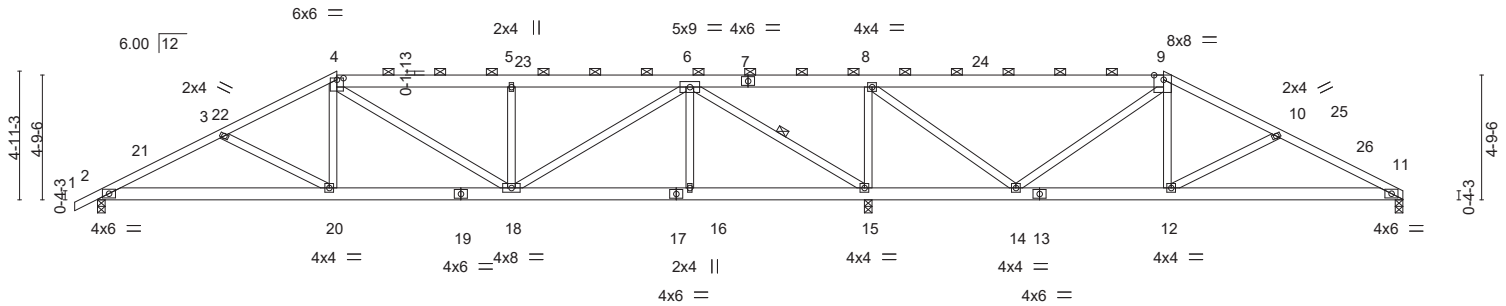

9-2-0	15-11-9	22-8-13	29-6-4	35-2-2	40-10-0	50-0-0
9-2-0	6-9-9	6-9-4	6-9-7	5-7-14	5-7-14	9-2-0

Plate Offsets (X,Y)-- [4:0-3-0,0-0-12], [9:0-4-6,Edge]

LOADING (psf)		**SPACING-** 2-0-0	**CSI.**		**DEFL.** in (loc) l/defl L/d	**PLATES**	**GRIP**
TCLL	20.0	Plate Grip DOL 1.15	TC	0.85	Vert(LL) -0.07 18-20 >999 240	MT20	244/190
TCDL	10.0	Lumber DOL 1.15	BC	0.44	Vert(CT) -0.15 2-20 >999 180		
BCLL	0.0 *	Rep Stress Incr YES	WB	0.90	Horz(CT) 0.03 11 n/a n/a		
BCDL	10.0	Code IRC2015/TPI2014	Matrix-S			Weight: 320 lb	FT = 20%

LUMBER-

TOP CHORD 2x4 SP No.2 *Except*
4-7,7-9: 2x6 SP No.2
BOT CHORD 2x6 SP No.2
WEBS 2x4 SP No.3

BRACING-

TOP CHORD Structural wood sheathing directly applied or 4-1-8 oc purlins, except 2-0-0 oc purlins (5-11-3 max.): 4-9.
BOT CHORD Rigid ceiling directly applied or 10-0-0 oc bracing, Except: 6-0-0 oc bracing: 14-15.
WEBS 1 Row at midpt 6-15

REACTIONS. (lb/size) 11=534/0-3-8, 2=1044/0-3-8, 15=2460/0-3-8
Max Horz 2=90(LC 12)
Max Uplift 11=-93(LC 13), 2=-110(LC 12), 15=-350(LC 9)
Max Grav 11=556(LC 24), 2=1057(LC 23), 15=2460(LC 1)

FORCES. (lb) - Max. Comp./Max. Ten. - All forces 250 (lb) or less except when shown.

TOP CHORD 2-3=-1825/353, 3-4=-1541/259, 4-5=-1405/271, 5-6=-1401/268, 6-8=-77/1117, 8-9=-82/339, 9-10=-573/128, 10-11=-849/222
BOT CHORD 2-20=-277/1579, 18-20=-142/1326, 16-18=-87/520, 15-16=-87/520, 14-15=-1117/250, 12-14=0/460, 11-12=-150/720
WEBS 3-20=-276/200, 4-20=0/400, 6-18=-184/1066, 6-15=-1856/248, 8-15=-1303/314, 8-14=-98/1033, 9-14=-906/187, 9-12=0/407, 10-12=-284/199, 6-16=0/267, 5-18=-485/212

NOTES-

1) Unbalanced roof live loads have been considered for this design.
2) Wind: ASCE 7-10; Vult=130mph (3-second gust) Vasd=103mph; TCDL=6.0psf; BCDL=6.0psf; h=25ft; Cat. II; Exp B; Enclosed; MWFRS (envelope) gable end zone and C-C Exterior(2) -0-10-8 to 4-1-8, Interior(1) 4-1-8 to 9-2-0, Exterior(2) 9-2-0 to 16-2-14, Interior(1) 16-2-14 to 40-10-0, Exterior(2) 40-10-0 to 47-10-14, Interior(1) 47-10-14 to 49-10-4 zone;C-C for members and forces & MWFRS for reactions shown; Lumber DOL=1.60 plate grip DOL=1.60
3) Provide adequate drainage to prevent water ponding.
4) This truss has been designed for a 10.0 psf bottom chord live load nonconcurrent with any other live loads.
5) * This truss has been designed for a live load of 20.0psf on the bottom chord in all areas where a rectangle 3-6-0 tall by 2-0-0 wide will fit between the bottom chord and any other members.
6) One RT7A USP connectors recommended to connect truss to bearing walls due to UPLIFT at jt(s) 11, 2, and 15. This connection is for uplift only and does not consider lateral forces.
7) Graphical purlin representation does not depict the size or the orientation of the purlin along the top and/or bottom chord.

May 1,2019

WARNING - Verify design parameters and READ NOTES ON THIS AND INCLUDED MITEK REFERENCE PAGE MII-7473 rev. 10/03/2015 BEFORE USE.
Design valid for use only with MiTek® connectors. This design is based only upon parameters shown, and is for an individual building component, not a truss system. Before use, the building designer must verify the applicability of design parameters and properly incorporate this design into the overall building design. Bracing indicated is to prevent buckling of individual truss web and/or chord members only. Additional temporary and permanent bracing is always required for stability and to prevent collapse with possible personal injury and property damage. For general guidance regarding the fabrication, storage, delivery, erection and bracing of trusses and truss systems, see **ANSI/TPI1 Quality Criteria, DSB-89 and BCSI Building Component Safety Information** available from Truss Plate Institute, 218 N. Lee Street, Suite 312, Alexandria, VA 22314.

ENGINEERING BY TRENCO A MiTek Affiliate
818 Soundside Road
Edenton, NC 27932

Job	Truss	Truss Type	Qty	Ply	149.2115 C CVP
20595A	H6	Hip	1	1	I36927206 Job Reference (optional)

84 Components (Dunn), Dunn, NC - 28334, 8.220 s Nov 16 2018 MiTek Industries, Inc. Tue Apr 30 16:12:01 2019 Page 1
ID:bNZHYySm82JAWDNgfw9uCLzLbIt-0uE59uhJddU2Mn?d6IKFWoqXDgjGiM6wwEjliVzLTvS

6-0-5	8-9-4	11-6-3	17-0-0	25-0-0	33-0-0	38-3-8	43-7-0	49-2-0
6-0-5	2-8-15	2-8-15	5-5-13	8-0-0	8-0-0	5-3-8	5-3-8	5-7-0

Scale = 1:87.9

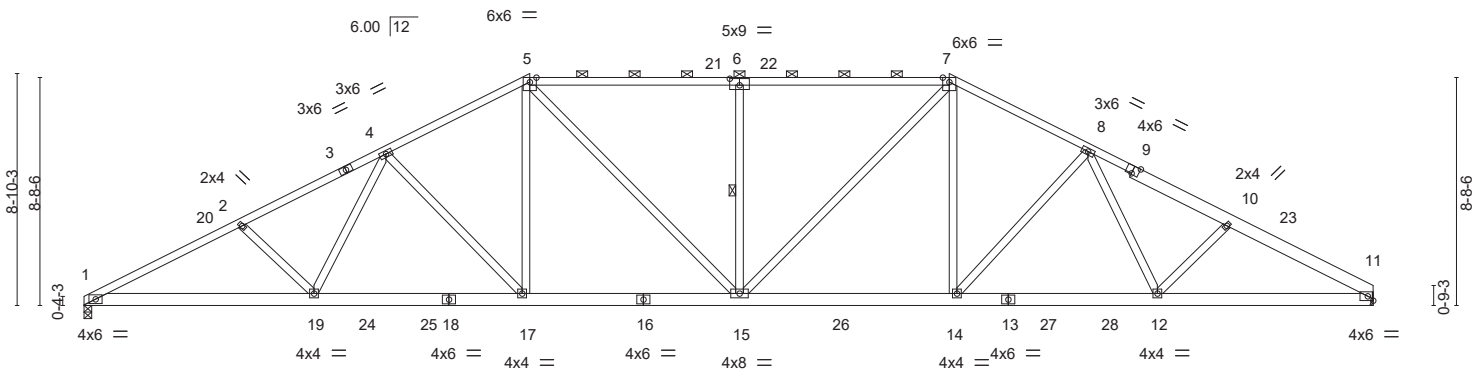

8-9-4	17-0-0	25-0-0	33-0-0	40-11-4	49-2-0
8-9-4	8-2-12	8-0-0	8-0-0	7-11-4	8-2-12

Plate Offsets (X,Y)-- [6:0-4-8,0-3-0], [9:0-3-0,Edge]

LOADING (psf)		SPACING- 2-0-0		CSI.		DEFL. in (loc) l/defl L/d		PLATES	GRIP
TCLL	20.0	Plate Grip DOL	1.15	TC	0.86	Vert(LL) -0.24 15-17 >999 240		MT20	244/190
TCDL	10.0	Lumber DOL	1.15	BC	0.78	Vert(CT) -0.47 15-17 >999 180			
BCLL	0.0 *	Rep Stress Incr	YES	WB	0.67	Horz(CT) 0.15 11 n/a n/a			
BCDL	10.0	Code IRC2015/TPI2014		Matrix-S				Weight: 323 lb	FT = 20%

LUMBER-
TOP CHORD 2x4 SP No.2 *Except*
5-6,6-7: 2x4 SP DSS, 9-11: 2x6 SP No.2
BOT CHORD 2x6 SP No.2
WEBS 2x4 SP No.3

BRACING-
TOP CHORD Structural wood sheathing directly applied, except 2-0-0 oc purlins (3-3-11 max.): 5-7.
BOT CHORD Rigid ceiling directly applied or 10-0-0 oc bracing.
WEBS 1 Row at midpt 6-15

REACTIONS. (lb/size) 1=1958/0-3-8, 11=1958/Mechanical
Max Horz 1=-140(LC 17)
Max Uplift 1=-171(LC 12), 11=-162(LC 13)

FORCES. (lb) - Max. Comp./Max. Ten. - All forces 250 (lb) or less except when shown.
TOP CHORD 1-2=-3911/582, 2-4=-3656/566, 4-5=-3024/550, 5-6=-2974/574, 6-7=-2974/574, 7-8=-2952/541, 8-10=-3433/542, 10-11=-3621/549
BOT CHORD 1-19=-469/3429, 17-19=-378/3015, 15-17=-247/2651, 14-15=-229/2593, 12-14=-344/2860, 11-12=-415/3112
WEBS 2-19=-325/202, 4-19=-41/484, 4-17=-576/221, 5-17=-68/688, 5-15=-165/644, 6-15=-599/255, 7-15=-165/714, 7-14=-63/605, 8-14=-451/207, 8-12=-37/383

NOTES-
1) Unbalanced roof live loads have been considered for this design.
2) Wind: ASCE 7-10; Vult=130mph (3-second gust) Vasd=103mph; TCDL=6.0psf; BCDL=6.0psf; h=25ft; Cat. II; Exp B; Enclosed; MWFRS (envelope) gable end zone and C-C Exterior(2) 0-1-12 to 5-0-12, Interior(1) 5-0-12 to 17-0-0, Exterior(2) 17-0-0 to 23-11-7, Interior(1) 23-11-7 to 33-0-0, Exterior(2) 33-0-0 to 39-11-7, Interior(1) 39-11-7 to 49-1-4 zone;C-C for members and forces & MWFRS for reactions shown; Lumber DOL=1.60 plate grip DOL=1.60
3) Provide adequate drainage to prevent water ponding.
4) This truss has been designed for a 10.0 psf bottom chord live load nonconcurrent with any other live loads.
5) * This truss has been designed for a live load of 20.0psf on the bottom chord in all areas where a rectangle 3-6-0 tall by 2-0-0 wide will fit between the bottom chord and any other members, with BCDL = 10.0psf.
6) Refer to girder(s) for truss to truss connections.
7) Provide mechanical connection (by others) of truss to bearing plate capable of withstanding 100 lb uplift at joint(s) except (jt=lb) 11=162.
8) One RT7A USP connectors recommended to connect truss to bearing walls due to UPLIFT at jt(s) 1. This connection is for uplift only and does not consider lateral forces.
9) Graphical purlin representation does not depict the size or the orientation of the purlin along the top and/or bottom chord.

May 1,2019

WARNING - Verify design parameters and READ NOTES ON THIS AND INCLUDED MITEK REFERENCE PAGE MII-7473 rev. 10/03/2015 BEFORE USE.
Design valid for use only with MiTek® connectors. This design is based only upon parameters shown, and is for an individual building component, not a truss system. Before use, the building designer must verify the applicability of design parameters and properly incorporate this design into the overall building design. Bracing indicated is to prevent buckling of individual truss web and/or chord members only. Additional temporary and permanent bracing is always required for stability and to prevent collapse with possible personal injury and property damage. For general guidance regarding the fabrication, storage, delivery, erection and bracing of trusses and truss systems, see **ANSI/TPI1 Quality Criteria, DSB-89 and BCSI Building Component Safety Information** available from Truss Plate Institute, 218 N. Lee Street, Suite 312, Alexandria, VA 22314.

ENGINEERING BY TRENCO A MiTek Affiliate
818 Soundside Road
Edenton, NC 27932

Job	Truss	Truss Type	Qty	Ply	149.2115 C CVP
20595A	H7	Hip	1	1	I36927207 Job Reference (optional)

84 Components (Dunn), Dunn, NC - 28334, 8.220 s Nov 16 2018 MiTek Industries, Inc. Tue Apr 30 16:12:02 2019 Page 1
ID:bNZHYySm82JAWDNgfw9uCLzLbIt-U4oTMEixOxcvzxaqg?rU3?Ngo44BRmk39uTIExzLTvR

6-11-11	14-4-0	21-5-15	28-6-1	35-8-0	43-0-5	49-2-0
6-11-11	7-4-5	7-1-15	7-0-3	7-1-15	7-4-5	6-1-11

Scale = 1:87.9

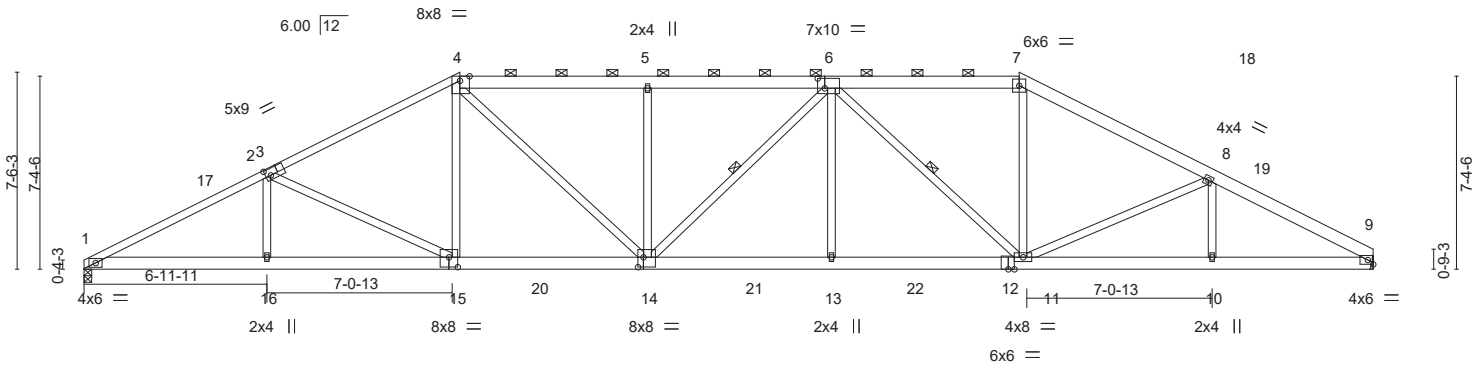

6-11-11	14-4-0	21-5-15	28-6-1	35-8-0	43-0-5	49-2-0
6-11-11	7-4-5	7-1-15	7-0-3	7-1-15	7-4-5	6-1-11

Plate Offsets (X,Y)-- [3:0-0-0,0-1-12], [3:0-2-4,0-3-0], [4:0-4-6,Edge], [6:0-3-4,0-4-8], [12:0-2-12,0-0-0], [14:0-2-8,0-4-8], [15:0-4-0,0-4-8]

LOADING (psf)		**SPACING-** 2-0-0	**CSI.**	**DEFL.** in (loc) l/defl L/d	**PLATES**	**GRIP**
TCLL	20.0	Plate Grip DOL 1.15	TC 1.00	Vert(LL) -0.23 13-14 >999 240	MT20	244/190
TCDL	10.0	Lumber DOL 1.15	BC 0.73	Vert(CT) -0.48 13-14 >999 180		
BCLL	0.0 *	Rep Stress Incr YES	WB 0.77	Horz(CT) 0.17 9 n/a n/a		
BCDL	10.0	Code IRC2015/TPI2014	Matrix-S		Weight: 337 lb	FT = 20%

LUMBER-
TOP CHORD 2x6 SP No.2 *Except*
3-4,1-3: 2x4 SP No.1
BOT CHORD 2x6 SP No.2
WEBS 2x4 SP No.3

BRACING-
TOP CHORD Structural wood sheathing directly applied, except
2-0-0 oc purlins (3-8-1 max.): 4-7.
BOT CHORD Rigid ceiling directly applied or 10-0-0 oc bracing.
WEBS 1 Row at midpt 6-14, 6-11

REACTIONS. (lb/size) 9=1958/Mechanical, 1=1958/0-3-8
Max Horz 1=117(LC 16)
Max Uplift 9=-135(LC 13), 1=-144(LC 12)

FORCES. (lb) - Max. Comp./Max. Ten. - All forces 250 (lb) or less except when shown.
TOP CHORD 1-2=-3917/594, 2-4=-3281/558, 4-5=-3461/621, 5-6=-3458/618, 6-7=-2767/540, 7-8=-3204/542, 8-9=-3681/564
BOT CHORD 1-16=-479/3428, 15-16=-479/3428, 14-15=-311/2847, 13-14=-376/3426, 11-13=-376/3426, 10-11=-438/3176, 9-10=-438/3176
WEBS 2-16=0/291, 2-15=-639/232, 4-15=-14/501, 4-14=-216/985, 5-14=-503/210, 6-13=0/344, 6-11=-1063/217, 7-11=-80/1001, 8-11=-444/222, 8-10=0/266

NOTES-
1) Unbalanced roof live loads have been considered for this design.
2) Wind: ASCE 7-10; Vult=130mph (3-second gust) Vasd=103mph; TCDL=6.0psf; BCDL=6.0psf; h=25ft; Cat. II; Exp B; Enclosed; MWFRS (envelope) gable end zone and C-C Exterior(2) 0-1-12 to 5-0-12, Interior(1) 5-0-12 to 14-4-0, Exterior(2) 14-4-0 to 21-5-15, Interior(1) 21-5-15 to 35-8-0, Exterior(2) 35-8-0 to 42-7-7, Interior(1) 42-7-7 to 49-1-4 zone;C-C for members and forces & MWFRS for reactions shown; Lumber DOL=1.60 plate grip DOL=1.60
3) Provide adequate drainage to prevent water ponding.
4) This truss has been designed for a 10.0 psf bottom chord live load nonconcurrent with any other live loads.
5) * This truss has been designed for a live load of 20.0psf on the bottom chord in all areas where a rectangle 3-6-0 tall by 2-0-0 wide will fit between the bottom chord and any other members, with BCDL = 10.0psf.
6) Refer to girder(s) for truss to truss connections.
7) Provide mechanical connection (by others) of truss to bearing plate capable of withstanding 100 lb uplift at joint(s) except (jt=lb) 9=135.
8) One RT7A USP connectors recommended to connect truss to bearing walls due to UPLIFT at jt(s) 1. This connection is for uplift only and does not consider lateral forces.
9) Graphical purlin representation does not depict the size or the orientation of the purlin along the top and/or bottom chord.

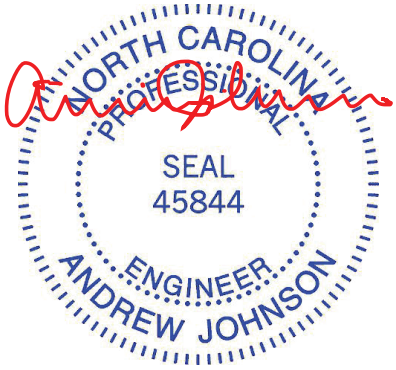

May 1,2019

WARNING - Verify design parameters and READ NOTES ON THIS AND INCLUDED MITEK REFERENCE PAGE MII-7473 rev. 10/03/2015 BEFORE USE.
Design valid for use only with MiTek® connectors. This design is based only upon parameters shown, and is for an individual building component, not a truss system. Before use, the building designer must verify the applicability of design parameters and properly incorporate this design into the overall building design. Bracing indicated is to prevent buckling of individual truss web and/or chord members only. Additional temporary and permanent bracing is always required for stability and to prevent collapse with possible personal injury and property damage. For general guidance regarding the fabrication, storage, delivery, erection and bracing of trusses and truss systems, see **ANSI/TPI1 Quality Criteria, DSB-89 and BCSI Building Component Safety Information** available from Truss Plate Institute, 218 N. Lee Street, Suite 312, Alexandria, VA 22314.

ENGINEERING BY TRENCO A MiTek Affiliate
818 Soundside Road
Edenton, NC 27932

Job	Truss	Truss Type	Qty	Ply	149.2115 C CVP
20595A	H8	Hip	1	1	I36927208 Job Reference (optional)

84 Components (Dunn), Dunn, NC - 28334, 8.220 s Nov 16 2018 MiTek Industries, Inc. Tue Apr 30 16:12:03 2019 Page 1

ID:bNZHYySm82JAWDNgfw9uCLzLbIt-yGMsZZjZ9Fkmb590DjMjbDvvuUOOAGwDOYCrmOzLTvQ

-0-10-8	6-0-0	11-8-0	18-4-14	25-0-0	31-7-2	38-4-0	44-0-0	49-2-0
0-10-8	6-0-0	5-8-0	6-8-14	6-7-2	6-7-2	6-8-14	5-8-0	5-2-0

Scale = 1:87.1

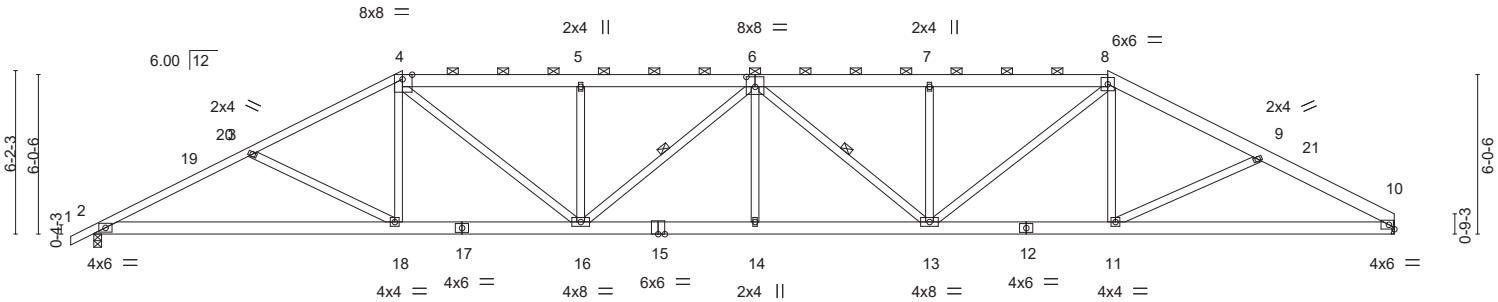

6-0-0	11-8-0	18-4-14	25-0-0	31-7-2	38-4-0	44-0-0	49-2-0
6-0-0	5-8-0	6-8-14	6-7-2	6-7-2	6-8-14	5-8-0	5-2-0

Plate Offsets (X,Y)-- [4:0-4-6,Edge], [6:0-4-0,0-4-8]

LOADING (psf)		**SPACING-** 2-0-0	**CSI.**		**DEFL.**	in	(loc)	l/defl	L/d	**PLATES**	**GRIP**
TCLL	20.0	Plate Grip DOL 1.15	TC	0.72	Vert(LL)	-0.30	14	>999	240	MT20	244/190
TCDL	10.0	Lumber DOL 1.15	BC	0.86	Vert(CT)	-0.60	14-16	>976	180		
BCLL	0.0 *	Rep Stress Incr YES	WB	0.58	Horz(CT)	0.18	10	n/a	n/a		
BCDL	10.0	Code IRC2015/TPI2014	Matrix-S							Weight: 333 lb	FT = 20%

LUMBER-

TOP CHORD 2x6 SP No.2 *Except*
1-4: 2x4 SP No.2
BOT CHORD 2x6 SP No.2
WEBS 2x4 SP No.3

BRACING-

TOP CHORD Structural wood sheathing directly applied or 2-2-0 oc purlins, except 2-0-0 oc purlins (3-4-3 max.): 4-8.
BOT CHORD Rigid ceiling directly applied or 9-9-2 oc bracing.
WEBS 1 Row at midpt 6-16, 6-13

REACTIONS. (lb/size) 10=1958/Mechanical, 2=2020/0-3-8
Max Horz 2=111(LC 16)
Max Uplift 10=-174(LC 8), 2=-176(LC 9)

FORCES. (lb) - Max. Comp./Max. Ten. - All forces 250 (lb) or less except when shown.

TOP CHORD 2-3=-3873/664, 3-4=-3514/554, 4-5=-4064/680, 5-6=-4059/677, 6-7=-3990/669, 7-8=-3993/671, 8-9=-3390/532, 9-10=-3600/622
BOT CHORD 2-18=-545/3397, 16-18=-338/3083, 14-16=-546/4340, 13-14=-546/4340, 11-13=-311/2969, 10-11=-491/3098
WEBS 3-18=-344/245, 4-18=0/491, 4-16=-311/1369, 5-16=-493/204, 6-16=-446/91, 6-14=0/288, 6-13=-528/98, 7-13=-458/197, 8-13=-300/1411, 8-11=0/398

NOTES-

1) Unbalanced roof live loads have been considered for this design.
2) Wind: ASCE 7-10; Vult=130mph (3-second gust) Vasd=103mph; TCDL=6.0psf; BCDL=6.0psf; h=25ft; Cat. II; Exp B; Enclosed; MWFRS (envelope) gable end zone and C-C Exterior(2) -0-10-8 to 4-0-8, Interior(1) 4-0-8 to 11-8-0, Exterior(2) 11-8-0 to 18-4-14, Interior(1) 18-4-14 to 38-4-0, Exterior(2) 38-4-0 to 45-3-7, Interior(1) 45-3-7 to 49-1-4 zone;C-C for members and forces & MWFRS for reactions shown; Lumber DOL=1.60 plate grip DOL=1.60
3) Provide adequate drainage to prevent water ponding.
4) This truss has been designed for a 10.0 psf bottom chord live load nonconcurrent with any other live loads.
5) * This truss has been designed for a live load of 20.0psf on the bottom chord in all areas where a rectangle 3-6-0 tall by 2-0-0 wide will fit between the bottom chord and any other members.
6) Refer to girder(s) for truss to truss connections.
7) Provide mechanical connection (by others) of truss to bearing plate capable of withstanding 100 lb uplift at joint(s) except (jt=lb) 10=174.
8) One RT7A USP connectors recommended to connect truss to bearing walls due to UPLIFT at jt(s) 2. This connection is for uplift only and does not consider lateral forces.
9) Graphical purlin representation does not depict the size or the orientation of the purlin along the top and/or bottom chord.

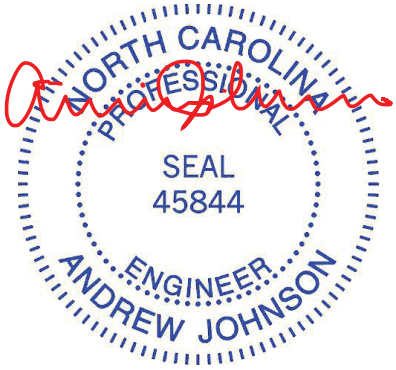

May 1,2019

WARNING - Verify design parameters and READ NOTES ON THIS AND INCLUDED MITEK REFERENCE PAGE MII-7473 rev. 10/03/2015 BEFORE USE.
Design valid for use only with MiTek® connectors. This design is based only upon parameters shown, and is for an individual building component, not a truss system. Before use, the building designer must verify the applicability of design parameters and properly incorporate this design into the overall building design. Bracing indicated is to prevent buckling of individual truss web and/or chord members only. Additional temporary and permanent bracing is always required for stability and to prevent collapse with possible personal injury and property damage. For general guidance regarding the fabrication, storage, delivery, erection and bracing of trusses and truss systems, see **ANSI/TPI1 Quality Criteria, DSB-89 and BCSI Building Component Safety Information** available from Truss Plate Institute, 218 N. Lee Street, Suite 312, Alexandria, VA 22314.

ENGINEERING BY TRENCO A MiTek Affiliate
818 Soundside Road
Edenton, NC 27932

Job	Truss	Truss Type	Qty	Ply	149.2115 C CVP
20595A	H9	Hip	1	1	I36927209 Job Reference (optional)

84 Components (Dunn), Dunn, NC - 28334, 8.220 s Nov 16 2018 MiTek Industries, Inc. Tue Apr 30 16:12:04 2019 Page 1

ID:bNZHYySm82JAWDNgfw9uCLzLbIt-RTwEnvkCwYsdDFkCnQty8QS4eumUveoMcCyPJqzLTvP

-0-10-8	4-9-4	9-0-0	17-0-14	25-0-0	32-11-2	41-0-0	44-11-4	49-2-0
0-10-8	4-9-4	4-2-12	8-0-14	7-11-2	7-11-2	8-0-14	3-11-4	4-2-12

Scale = 1:87.1

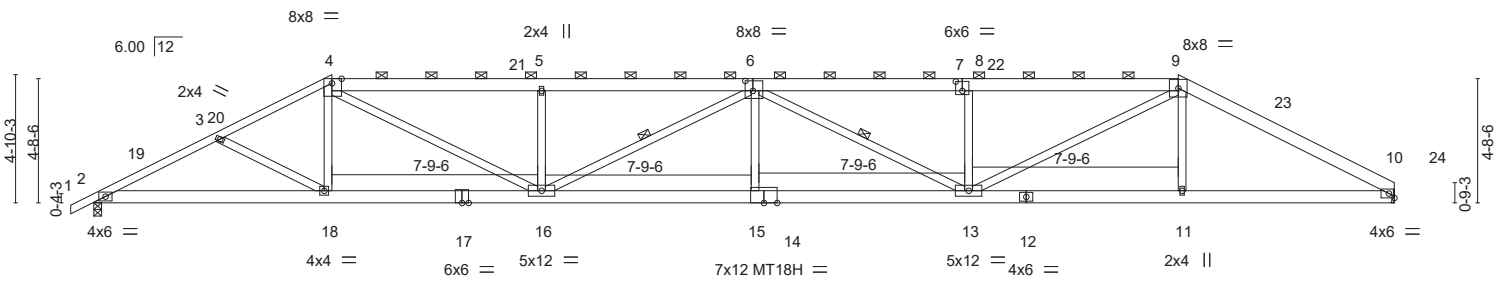

9-0-0	17-0-14	25-0-0	32-11-2	41-0-0	49-2-0
9-0-0	8-0-14	7-11-2	7-11-2	8-0-14	8-2-0

Plate Offsets (X,Y)-- [4:0-4-6,Edge], [6:0-3-8,0-4-8], [7:0-0-0,0-2-12], [8:0-3-0,0-4-4], [8:0-1-12,0-0-0], [14:0-0-0,0-2-12], [15:0-1-12,0-0-0]

LOADING (psf)		**SPACING-** 2-0-0	**CSI.**		**DEFL.**	in	(loc)	l/defl	L/d	**PLATES**	**GRIP**
TCLL	20.0	Plate Grip DOL 1.15	TC	0.72	Vert(LL)	-0.42	15	>999	240	MT20	244/190
TCDL	10.0	Lumber DOL 1.15	BC	0.74	Vert(CT)	-0.85	15-16	>694	180	MT18H	244/190
BCLL	0.0 *	Rep Stress Incr YES	WB	0.93	Horz(CT)	0.18	10	n/a	n/a		
BCDL	10.0	Code IRC2015/TPI2014	Matrix-S							Weight: 315 lb	FT = 20%

LUMBER-

TOP CHORD 2x6 SP No.2 *Except*
1-4: 2x4 SP No.2
BOT CHORD 2x6 SP No.2 *Except*
12-14,14-17: 2x6 SP DSS
WEBS 2x4 SP No.3

BRACING-

TOP CHORD Structural wood sheathing directly applied or 2-7-4 oc purlins, except 2-0-0 oc purlins (2-6-2 max.): 4-9.
BOT CHORD Rigid ceiling directly applied or 9-3-4 oc bracing.
WEBS 1 Row at midpt 6-16, 6-13

REACTIONS. (lb/size) 10=1958/Mechanical, 2=2020/0-3-8
Max Horz 2=89(LC 16)
Max Uplift 10=-223(LC 8), 2=-224(LC 9)

FORCES. (lb) - Max. Comp./Max. Ten. - All forces 250 (lb) or less except when shown.

TOP CHORD 2-3=-3948/655, 3-4=-3728/572, 4-5=-5169/829, 5-6=-5165/826, 6-8=-5050/806, 8-9=-5052/808, 9-10=-3689/543
BOT CHORD 2-18=-545/3469, 16-18=-436/3309, 15-16=-863/5729, 13-15=-861/5733, 11-13=-376/3157, 10-11=-373/3164
WEBS 4-18=0/384, 4-16=-440/2183, 5-16=-577/242, 6-16=-704/143, 6-15=0/330, 6-13=-818/151, 8-13=-547/239, 9-13=-439/2242, 9-11=0/362

NOTES-

1) Unbalanced roof live loads have been considered for this design.
2) Wind: ASCE 7-10; Vult=130mph (3-second gust) Vasd=103mph; TCDL=6.0psf; BCDL=6.0psf; h=25ft; Cat. II; Exp B; Enclosed; MWFRS (envelope) gable end zone and C-C Exterior(2) -0-10-8 to 4-0-8, Interior(1) 4-0-8 to 9-0-0, Exterior(2) 9-0-0 to 15-11-7, Interior(1) 15-11-7 to 41-0-0, Exterior(2) 41-0-0 to 47-11-7, Interior(1) 47-11-7 to 49-1-4 zone;C-C for members and forces & MWFRS for reactions shown; Lumber DOL=1.60 plate grip DOL=1.60
3) Provide adequate drainage to prevent water ponding.
4) All plates are MT20 plates unless otherwise indicated.
5) This truss has been designed for a 10.0 psf bottom chord live load nonconcurrent with any other live loads.
6) * This truss has been designed for a live load of 20.0psf on the bottom chord in all areas where a rectangle 3-6-0 tall by 2-0-0 wide will fit between the bottom chord and any other members.
7) Refer to girder(s) for truss to truss connections.
8) Provide mechanical connection (by others) of truss to bearing plate capable of withstanding 100 lb uplift at joint(s) except (jt=lb) 10=223.
9) One RT7A USP connectors recommended to connect truss to bearing walls due to UPLIFT at jt(s) 2. This connection is for uplift only and does not consider lateral forces.
10) Graphical purlin representation does not depict the size or the orientation of the purlin along the top and/or bottom chord.

May 1,2019

WARNING - Verify design parameters and READ NOTES ON THIS AND INCLUDED MITEK REFERENCE PAGE MII-7473 rev. 10/03/2015 BEFORE USE.

Design valid for use only with MiTek® connectors. This design is based only upon parameters shown, and is for an individual building component, not a truss system. Before use, the building designer must verify the applicability of design parameters and properly incorporate this design into the overall building design. Bracing indicated is to prevent buckling of individual truss web and/or chord members only. Additional temporary and permanent bracing is always required for stability and to prevent collapse with possible personal injury and property damage. For general guidance regarding the fabrication, storage, delivery, erection and bracing of trusses and truss systems, see **ANSI/TPI1 Quality Criteria, DSB-89 and BCSI Building Component Safety Information** available from Truss Plate Institute, 218 N. Lee Street, Suite 312, Alexandria, VA 22314.

ENGINEERING BY
TRENCO
A MiTek Affiliate
818 Soundside Road
Edenton, NC 27932

Job	Truss	Truss Type	Qty	Ply	149.2115 C CVP
20595A	HG1	HALF HIP GIRDER	1	1	I36927210 Job Reference (optional)

84 Components (Dunn), Dunn, NC - 28334, 8.220 s Nov 16 2018 MiTek Industries, Inc. Tue Apr 30 16:12:07 2019 Page 1

ID:bNZHYySm82JAWDNgfw9uCLzLbIt-r2bMPxm4DTEC4iSnSZQgm34ZV5oM6?HpIAA3v9zLTvM

-0-10-8	3-7-4	6-4-0	12-1-9	17-11-2	23-8-11	29-6-4	36-3-0	42-11-12	50-0-0
0-10-8	3-7-4	2-8-12	5-9-9	5-9-9	5-9-9	5-9-9	6-8-12	6-8-12	7-0-4

Scale = 1:88.5

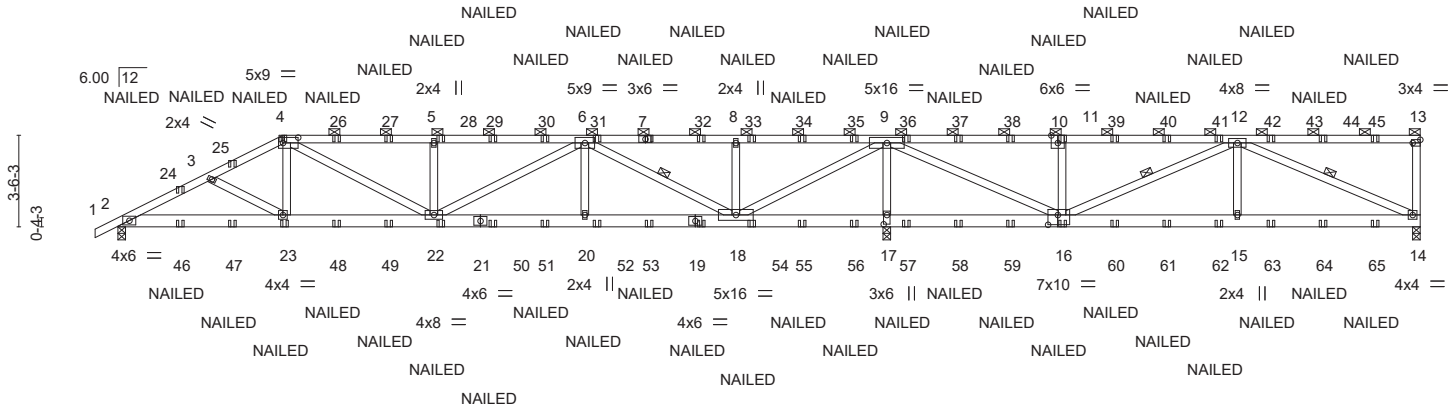

3-7-4	6-4-0	12-1-9	17-11-2	23-8-11	29-6-4	36-3-0	42-11-12	50-0-0
3-7-4	2-8-12	5-9-9	5-9-9	5-9-9	5-9-9	6-8-12	6-8-12	7-0-4

Plate Offsets (X,Y)-- [4:0-7-0,0-2-8], [10:0-0-0,0-1-12], [11:0-3-0,Edge], [11:0-1-12,0-0-0], [13:Edge,0-1-8], [16:0-4-8,0-4-8], [17:0-4-4,0-1-8]

LOADING (psf)		SPACING- 2-0-0		CSI.		DEFL.	in	(loc)	l/defl	L/d	PLATES	GRIP
TCLL	20.0	Plate Grip DOL	1.15	TC	0.87	Vert(LL)	0.21	20-22	>999	240	MT20	244/190
TCDL	10.0	Lumber DOL	1.15	BC	0.67	Vert(CT)	-0.33	20-22	>999	180		
BCLL	0.0 *	Rep Stress Incr	NO	WB	0.94	Horz(CT)	0.04	17	n/a	n/a		
BCDL	10.0	Code IRC2015/TPI2014		Matrix-S							Weight: 299 lb	FT = 20%

LUMBER-

TOP CHORD 2x4 SP No.2 *Except*
4-7,10-13: 2x4 SP No.1
BOT CHORD 2x6 SP No.2
WEBS 2x4 SP No.3 *Except*
6-22,6-18,9-18,9-16,12-16: 2x4 SP No.2

BRACING-

TOP CHORD Structural wood sheathing directly applied or 3-2-15 oc purlins, except end verticals, and 2-0-0 oc purlins (2-10-1 max.): 4-13.
BOT CHORD Rigid ceiling directly applied or 4-3-4 oc bracing.
WEBS 1 Row at midpt 6-18, 12-16, 12-14

REACTIONS. (lb/size) 14=810/0-3-8, 2=1527/0-3-8, 17=3769/0-3-8 (req. 0-4-7)
Max Horz 2=137(LC 31)
Max Uplift 14=-288(LC 8), 2=-400(LC 12), 17=-1334(LC 9)

FORCES. (lb) - Max. Comp./Max. Ten. - All forces 250 (lb) or less except when shown.
TOP CHORD 2-3=-2801/890, 3-4=-2582/831, 4-5=-3007/1045, 5-6=-3007/1045, 6-8=-496/184, 8-9=-496/184, 13-14=-279/176
BOT CHORD 2-23=-881/2446, 22-23=-772/2300, 20-22=-853/2433, 18-20=-853/2433, 17-18=-2567/889, 16-17=-2567/889, 15-16=-377/1017, 14-15=-377/1017
WEBS 4-23=0/475, 4-22=-366/803, 5-22=-553/387, 6-22=-238/653, 6-20=0/388, 6-18=-2203/761, 8-18=-500/351, 9-18=-1220/3484, 9-17=-3470/1418, 9-16=-1015/2865, 11-16=-593/413, 12-16=-1090/377, 12-15=0/471, 12-14=-1051/382

NOTES-

1) Wind: ASCE 7-10; Vult=130mph (3-second gust) Vasd=103mph; TCDL=6.0psf; BCDL=6.0psf; h=25ft; Cat. II; Exp B; Enclosed; MWFRS (envelope) gable end zone and C-C Exterior(2) -0-10-8 to 4-1-8, Interior(1) 4-1-8 to 6-4-0, Exterior(2) 6-4-0 to 13-4-14, Interior(1) 13-4-14 to 49-10-4 zone;C-C for members and forces & MWFRS for reactions shown; Lumber DOL=1.60 plate grip DOL=1.60
2) Provide adequate drainage to prevent water ponding.
3) This truss has been designed for a 10.0 psf bottom chord live load nonconcurrent with any other live loads.
4) * This truss has been designed for a live load of 20.0psf on the bottom chord in all areas where a rectangle 3-6-0 tall by 2-0-0 wide will fit between the bottom chord and any other members.
5) WARNING: Required bearing size at joint(s) 17 greater than input bearing size.
6) Provide mechanical connection (by others) of truss to bearing plate capable of withstanding 100 lb uplift at joint(s) except (jt=lb) 17=1334.
7) One RT7A USP connectors recommended to connect truss to bearing walls due to UPLIFT at jt(s) 14 and 2. This connection is for uplift only and does not consider lateral forces.
8) Graphical purlin representation does not depict the size or the orientation of the purlin along the top and/or bottom chord.
9) "NAILED" indicates 3-10d (0.148"x3") or 3-12d (0.148"x3.25") toe-nails per NDS guidlines.
10) In the LOAD CASE(S) section, loads applied to the face of the truss are noted as front (F) or back (B).

LOAD CASE(S) Standard

May 1,2019

Continued on page 2

WARNING - Verify design parameters and READ NOTES ON THIS AND INCLUDED MITEK REFERENCE PAGE MII-7473 rev. 10/03/2015 BEFORE USE.
Design valid for use only with MiTek® connectors. This design is based only upon parameters shown, and is for an individual building component, not a truss system. Before use, the building designer must verify the applicability of design parameters and properly incorporate this design into the overall building design. Bracing indicated is to prevent buckling of individual truss web and/or chord members only. Additional temporary and permanent bracing is always required for stability and to prevent collapse with possible personal injury and property damage. For general guidance regarding the fabrication, storage, delivery, erection and bracing of trusses and truss systems, see **ANSI/TPI1 Quality Criteria, DSB-89 and BCSI Building Component Safety Information** available from Truss Plate Institute, 218 N. Lee Street, Suite 312, Alexandria, VA 22314.

ENGINEERING BY TRENCO A MiTek Affiliate
818 Soundside Road
Edenton, NC 27932

LOAD CASE(S) Standard

1) Dead + Roof Live (balanced): Lumber Increase=1.15, Plate Increase=1.15
   Uniform Loads (plf)
   Vert: 1-4=-60, 4-13=-60, 2-14=-20
   Concentrated Loads (lb)
   Vert: 4=-61(F) 7=-61(F) 13=-23 23=-23(F) 22=-23(F) 5=-61(F) 16=-23(F) 10=-61(F) 19=-23(F) 24=-54(F) 26=-61(F) 27=-61(F) 29=-61(F) 30=-61(F) 31=-61(F) 32=-61(F) 33=-61(F) 34=-61(F) 35=-61(F) 36=-61(F) 37=-61(F) 38=-61(F) 39=-61(F) 40=-61(F) 41=-61(F) 42=-61(F) 44=-61(F) 45=-61(F) 46=-33(F) 47=-101(F) 48=-23(F) 49=-23(F) 50=-23(F) 51=-23(F) 52=-23(F) 53=-23(F) 54=-23(F) 55=-23(F) 56=-23(F) 57=-23(F) 58=-23(F) 59=-23(F) 60=-23(F) 61=-23(F) 62=-23(F) 63=-23(F) 64=-23(F) 65=-23(F)

WARNING - Verify design parameters and READ NOTES ON THIS AND INCLUDED MITEK REFERENCE PAGE MII-7473 rev. 10/03/2015 BEFORE USE.
Design valid for use only with MiTek® connectors. This design is based only upon parameters shown, and is for an individual building component, not a truss system. Before use, the building designer must verify the applicability of design parameters and properly incorporate this design into the overall building design. Bracing indicated is to prevent buckling of individual truss web and/or chord members only. Additional temporary and permanent bracing is always required for stability and to prevent collapse with possible personal injury and property damage. For general guidance regarding the fabrication, storage, delivery, erection and bracing of trusses and truss systems, see **ANSI/TPI1 Quality Criteria, DSB-89 and BCSI Building Component Safety Information** available from Truss Plate Institute, 218 N. Lee Street, Suite 312, Alexandria, VA 22314.

ENGINEERING BY TRENCO A MiTek Affiliate
818 Soundside Road
Edenton, NC 27932

Job	Truss	Truss Type	Qty	Ply	149.2115 C CVP
20595A	HG2	HALF HIP GIRDER	1	1	I36927211 Job Reference (optional)

84 Components (Dunn), Dunn, NC - 28334, 8.220 s Nov 16 2018 MiTek Industries, Inc. Tue Apr 30 16:12:10 2019 Page 1

ID:bNZHYySm82JAWDNgfw9uCLzLbIt-FdHV1zoyWOcmxABM8h_NNhi3NIpoJM3F?8PjWUzLTvJ

-0-10-8	3-7-4	6-4-0	11-9-9	17-1-6	22-5-3	27-9-0	33-0-13	38-4-10	43-8-7	49-2-0
0-10-8	3-7-4	2-8-12	5-5-9	5-3-13	5-3-13	5-3-13	5-3-13	5-3-13	5-3-13	5-5-9

Scale = 1:88.9

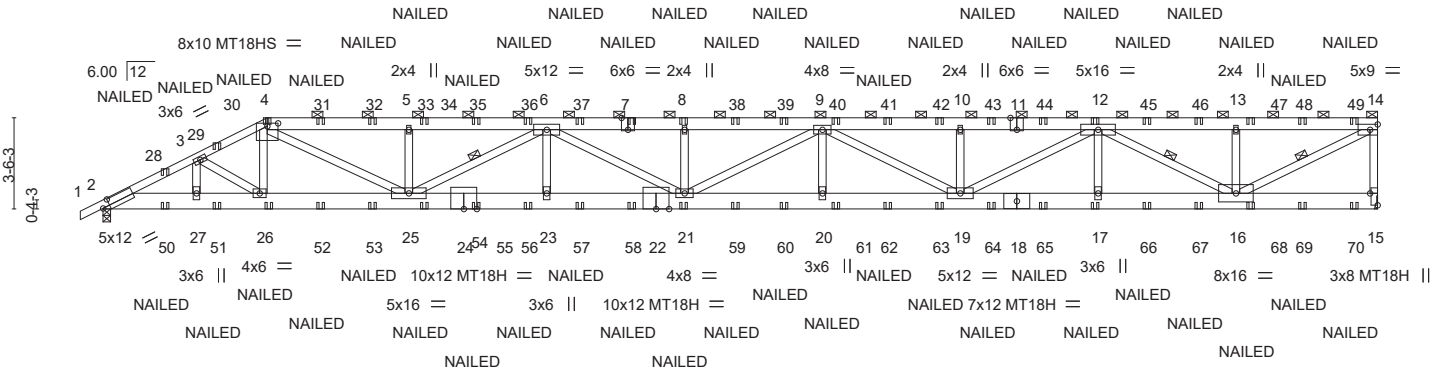

3-7-4	6-4-0	11-9-9	17-1-6	22-5-3	27-9-0	33-0-13	38-4-10	43-8-7	49-2-0
3-7-4	2-8-12	5-5-9	5-3-13	5-3-13	5-3-13	5-3-13	5-3-13	5-3-13	5-5-9

Plate Offsets (X,Y)-- [2:0-3-6,0-3-0], [4:0-5-0,0-1-7], [7:0-3-0,Edge], [11:0-3-0,Edge], [15:Edge,0-3-8]

LOADING (psf)		SPACING- 2-0-0		CSI.		DEFL.	in	(loc)	l/defl	L/d	PLATES	GRIP
TCLL	20.0	Plate Grip DOL	1.15	TC	0.96	Vert(LL)	1.09	20-21	>537	240	MT20	244/190
TCDL	10.0	Lumber DOL	1.15	BC	0.75	Vert(CT)	-1.67	20-21	>352	180	MT18H	244/190
BCLL	0.0 *	Rep Stress Incr	NO	WB	0.94	Horz(CT)	0.23	15	n/a	n/a	MT18HS	244/190
BCDL	10.0	Code IRC2015/TPI2014		Matrix-S							Weight: 369 lb	FT = 20%

LUMBER-

TOP CHORD 2x6 SP DSS *Except*
1-4: 2x4 SP No.2
BOT CHORD 2x8 SP DSS
WEBS 2x4 SP No.3 *Except*
4-25: 2x4 SP No.2
6-25,6-21,9-21,9-19,12-19,12-16,14-16: 2x4 SP No.1

BRACING-

TOP CHORD Structural wood sheathing directly applied or 1-9-2 oc purlins, except end verticals, and 2-0-0 oc purlins (2-0-12 max.): 4-14.
BOT CHORD Rigid ceiling directly applied or 4-9-5 oc bracing.
WEBS 1 Row at midpt 6-25, 12-16, 14-16

REACTIONS. (lb/size) 15=3009/Mechanical, 2=3017/0-3-8
Max Horz 2=134(LC 12)
Max Uplift 15=-1075(LC 9), 2=-915(LC 9)

FORCES. (lb) - Max. Comp./Max. Ten. - All forces 250 (lb) or less except when shown.

TOP CHORD 2-3=-5848/1876, 3-4=-6118/2056, 4-5=-8807/3081, 5-6=-8805/3080, 6-8=-12043/4263, 8-9=-12043/4263, 9-10=-10680/3795, 10-12=-10680/3795, 12-13=-4744/1689, 13-14=-4744/1689, 14-15=-2874/1094

BOT CHORD 2-27=-1769/5200, 26-27=-1769/5200, 25-26=-1861/5461, 23-25=-3918/11095, 21-23=-3918/11095, 20-21=-4273/12023, 19-20=-4273/12023, 17-19=-2977/8349, 16-17=-2977/8349

WEBS 3-27=-496/228, 3-26=-195/413, 4-26=-49/521, 4-25=-1401/3841, 5-25=-535/369, 6-25=-2642/968, 6-23=0/380, 6-21=-403/1105, 8-21=-445/319, 9-20=0/370, 9-19=-1539/549, 10-19=-447/319, 12-19=-939/2673, 12-17=0/359, 12-16=-4134/1477, 13-16=-501/359, 14-16=-1911/5379

NOTES-

1) Unbalanced roof live loads have been considered for this design.
2) Wind: ASCE 7-10; Vult=130mph (3-second gust) Vasd=103mph; TCDL=6.0psf; BCDL=6.0psf; h=25ft; Cat. II; Exp B; Enclosed; MWFRS (envelope) gable end zone and C-C Exterior(2) -0-10-8 to 4-0-8, Interior(1) 4-0-8 to 6-4-0, Exterior(2) 6-4-0 to 13-3-7, Interior(1) 13-3-7 to 49-0-4 zone;C-C for members and forces & MWFRS for reactions shown; Lumber DOL=1.60 plate grip DOL=1.60
3) Provide adequate drainage to prevent water ponding.
4) All plates are MT20 plates unless otherwise indicated.
5) This truss has been designed for a 10.0 psf bottom chord live load nonconcurrent with any other live loads.
6) * This truss has been designed for a live load of 20.0psf on the bottom chord in all areas where a rectangle 3-6-0 tall by 2-0-0 wide will fit between the bottom chord and any other members.
7) Refer to girder(s) for truss to truss connections.
8) Provide mechanical connection (by others) of truss to bearing plate capable of withstanding 100 lb uplift at joint(s) except (jt=lb) 15=1075, 2=915.
9) Graphical purlin representation does not depict the size or the orientation of the purlin along the top and/or bottom chord.
10) "NAILED" indicates 3-10d (0.148"x3") or 3-12d (0.148"x3.25") toe-nails per NDS guidlines.
11) In the LOAD CASE(S) section, loads applied to the face of the truss are noted as front (F) or back (B).

Continued on page 2

NORTH CAROLINA PROFESSIONAL SEAL 45844 ENGINEER ANDREW JOHNSON

May 1,2019

LOAD CASE(S) Standard

WARNING - Verify design parameters and READ NOTES ON THIS AND INCLUDED MITEK REFERENCE PAGE MII-7473 rev. 10/03/2015 BEFORE USE.
Design valid for use only with MiTek® connectors. This design is based only upon parameters shown, and is for an individual building component, not a truss system. Before use, the building designer must verify the applicability of design parameters and properly incorporate this design into the overall building design. Bracing indicated is to prevent buckling of individual truss web and/or chord members only. Additional temporary and permanent bracing is always required for stability and to prevent collapse with possible personal injury and property damage. For general guidance regarding the fabrication, storage, delivery, erection and bracing of trusses and truss systems, see **ANSI/TPI1 Quality Criteria, DSB-89 and BCSI Building Component Safety Information** available from Truss Plate Institute, 218 N. Lee Street, Suite 312, Alexandria, VA 22314.

ENGINEERING BY TRENCO A MiTek Affiliate
818 Soundside Road
Edenton, NC 27932

LOAD CASE(S) Standard

1) Dead + Roof Live (balanced): Lumber Increase=1.15, Plate Increase=1.15
   Uniform Loads (plf)
   Vert: 1-4=-60, 4-14=-60, 2-15=-20
   Concentrated Loads (lb)
   Vert: 4=-61(B) 7=-61(B) 26=-23(B) 21=-23(B) 8=-61(B) 17=-23(B) 12=-61(B) 28=-54(B) 31=-61(B) 32=-61(B) 33=-61(B) 35=-61(B) 36=-61(B) 37=-61(B) 38=-61(B) 39=-61(B) 40=-61(B) 41=-61(B) 42=-61(B) 43=-61(B) 44=-61(B) 45=-61(B) 46=-61(B) 47=-61(B) 48=-61(B) 49=-69(B) 50=-33(B) 51=-101(B) 52=-23(B) 53=-23(B) 54=-23(B) 55=-23(B) 56=-23(B) 57=-23(B) 58=-23(B) 59=-23(B) 60=-23(B) 61=-23(B) 62=-23(B) 63=-23(B) 64=-23(B) 65=-23(B) 66=-23(B) 67=-23(B) 68=-23(B) 69=-23(B) 70=-25(B)

WARNING - Verify design parameters and READ NOTES ON THIS AND INCLUDED MITEK REFERENCE PAGE MII-7473 rev. 10/03/2015 BEFORE USE.
Design valid for use only with MiTek® connectors. This design is based only upon parameters shown, and is for an individual building component, not a truss system. Before use, the building designer must verify the applicability of design parameters and properly incorporate this design into the overall building design. Bracing indicated is to prevent buckling of individual truss web and/or chord members only. Additional temporary and permanent bracing is always required for stability and to prevent collapse with possible personal injury and property damage. For general guidance regarding the fabrication, storage, delivery, erection and bracing of trusses and truss systems, see **ANSI/TPI1 Quality Criteria, DSB-89 and BCSI Building Component Safety Information** available from Truss Plate Institute, 218 N. Lee Street, Suite 312, Alexandria, VA 22314.

ENGINEERING BY TRENCO A MiTek Affiliate
818 Soundside Road
Edenton, NC 27932

Job	Truss	Truss Type	Qty	Ply	149.2115 C CVP
20595A	J1	Jack-Open	44	1	I36927212 Job Reference (optional)

84 Components (Dunn), Dunn, NC - 28334, 8.220 s Nov 16 2018 MiTek Industries, Inc. Tue Apr 30 16:12:11 2019 Page 1
ID:bNZHYySm82JAWDNgfw9uCLzLbIt-jprtFJpbHildZKmYhOVcwvEN?iHE211ODo8H2wzLTvI

-0-10-8 4-6-0
0-10-8 4-6-0

Scale = 1:20.5

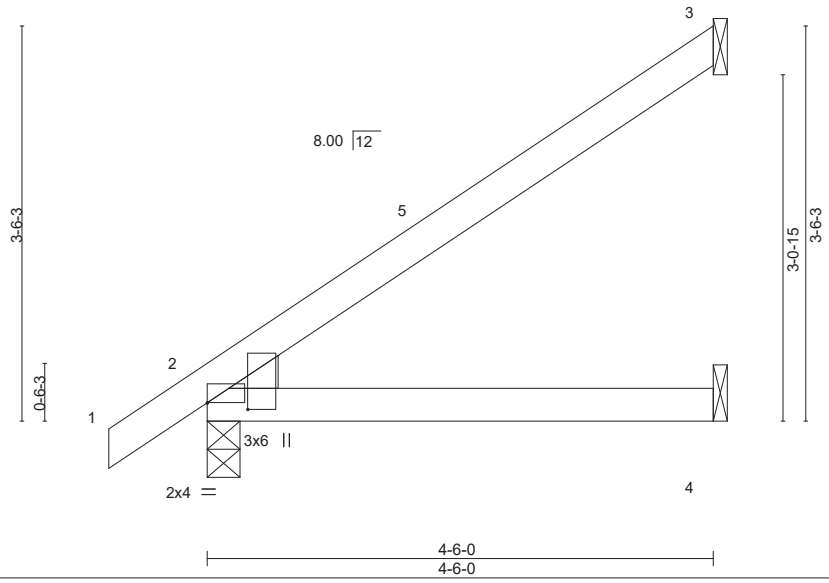

Plate Offsets (X,Y)-- [2:0-0-0,0-0-0], [2:0-0-11,0-4-5]

LOADING (psf)		SPACING- 2-0-0		CSI.		DEFL.	in	(loc)	l/defl	L/d	PLATES	GRIP
TCLL	20.0	Plate Grip DOL	1.15	TC	0.33	Vert(LL)	-0.02	2-4	>999	240	MT20	244/190
TCDL	10.0	Lumber DOL	1.15	BC	0.22	Vert(CT)	-0.04	2-4	>999	180		
BCLL	0.0 *	Rep Stress Incr	YES	WB	0.00	Horz(CT)	-0.00	3	n/a	n/a		
BCDL	10.0	Code IRC2015/TPI2014		Matrix-P							Weight: 17 lb	FT = 20%

LUMBER-
TOP CHORD 2x4 SP No.2
BOT CHORD 2x4 SP No.2
WEDGE
Left: 2x4 SP No.3

BRACING-
TOP CHORD Structural wood sheathing directly applied or 4-6-0 oc purlins.
BOT CHORD Rigid ceiling directly applied or 10-0-0 oc bracing.

REACTIONS. (lb/size) 3=121/Mechanical, 2=240/0-3-8, 4=43/Mechanical
Max Horz 2=135(LC 12)
Max Uplift 3=-99(LC 12), 2=-11(LC 12)
Max Grav 3=135(LC 19), 2=240(LC 1), 4=86(LC 3)

FORCES. (lb) - Max. Comp./Max. Ten. - All forces 250 (lb) or less except when shown.

NOTES-
1) Wind: ASCE 7-10; Vult=130mph (3-second gust) Vasd=103mph; TCDL=6.0psf; BCDL=6.0psf; h=25ft; Cat. II; Exp B; Enclosed; MWFRS (envelope) gable end zone and C-C Exterior(2) -0-10-8 to 2-1-8, Interior(1) 2-1-8 to 4-5-4 zone;C-C for members and forces & MWFRS for reactions shown; Lumber DOL=1.60 plate grip DOL=1.60
2) This truss has been designed for a 10.0 psf bottom chord live load nonconcurrent with any other live loads.
3) * This truss has been designed for a live load of 20.0psf on the bottom chord in all areas where a rectangle 3-6-0 tall by 2-0-0 wide will fit between the bottom chord and any other members.
4) Refer to girder(s) for truss to truss connections.
5) Provide mechanical connection (by others) of truss to bearing plate capable of withstanding 100 lb uplift at joint(s) 3, 2.

May 1,2019

WARNING - Verify design parameters and READ NOTES ON THIS AND INCLUDED MITEK REFERENCE PAGE MII-7473 rev. 10/03/2015 BEFORE USE.
Design valid for use only with MiTek® connectors. This design is based only upon parameters shown, and is for an individual building component, not a truss system. Before use, the building designer must verify the applicability of design parameters and properly incorporate this design into the overall building design. Bracing indicated is to prevent buckling of individual truss web and/or chord members only. Additional temporary and permanent bracing is always required for stability and to prevent collapse with possible personal injury and property damage. For general guidance regarding the fabrication, storage, delivery, erection and bracing of trusses and truss systems, see **ANSI/TPI1 Quality Criteria, DSB-89 and BCSI Building Component Safety Information** available from Truss Plate Institute, 218 N. Lee Street, Suite 312, Alexandria, VA 22314.

ENGINEERING BY TRENCO A MiTek Affiliate
818 Soundside Road
Edenton, NC 27932

Job	Truss	Truss Type	Qty	Ply	149.2115 C CVP
20595A	J2	Jack-Open	2	1	I36927213 Job Reference (optional)

84 Components (Dunn), Dunn, NC - 28334, 8.220 s Nov 16 2018 MiTek Industries, Inc. Tue Apr 30 16:12:11 2019 Page 1
ID:bNZHYySm82JAWDNgfw9uCLzLbIt-jprtFJpbHildZKmYhOVcwvEQriEL21WODo8H2wzLTvI

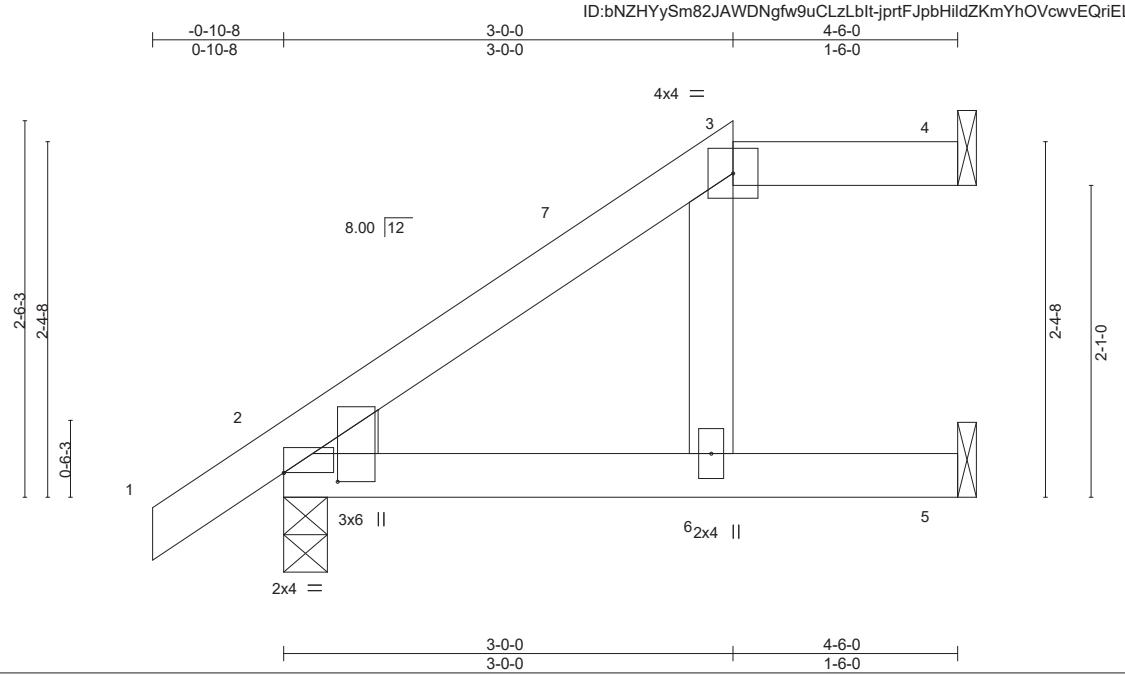

Plate Offsets (X,Y)-- [2:0-0-0,0-0-0], [2:0-0-11,0-4-5]

LOADING (psf)		SPACING-	2-0-0	CSI.		DEFL.	in	(loc)	l/defl	L/d	PLATES	GRIP
TCLL	20.0	Plate Grip DOL	1.15	TC	0.14	Vert(LL)	-0.03	2-6	>999	240	MT20	244/190
TCDL	10.0	Lumber DOL	1.15	BC	0.41	Vert(CT)	-0.06	2-6	>815	180		
BCLL	0.0 *	Rep Stress Incr	YES	WB	0.03	Horz(CT)	0.05	4	n/a	n/a		
BCDL	10.0	Code IRC2015/TPI2014		Matrix-P							Weight: 20 lb	FT = 20%

LUMBER-
TOP CHORD 2x4 SP No.2
BOT CHORD 2x4 SP No.2
WEBS 2x4 SP No.3
WEDGE
Left: 2x4 SP No.3

BRACING-
TOP CHORD Structural wood sheathing directly applied or 4-6-0 oc purlins, except 2-0-0 oc purlins: 3-4.
BOT CHORD Rigid ceiling directly applied or 6-0-0 oc bracing.

REACTIONS. (lb/size) 4=43/Mechanical, 2=240/0-3-8, 5=121/Mechanical
Max Horz 2=94(LC 12)
Max Uplift 4=-19(LC 8), 2=-32(LC 12), 5=-21(LC 12)

FORCES. (lb) - Max. Comp./Max. Ten. - All forces 250 (lb) or less except when shown.

NOTES-
1) Unbalanced roof live loads have been considered for this design.
2) Wind: ASCE 7-10; Vult=130mph (3-second gust) Vasd=103mph; TCDL=6.0psf; BCDL=6.0psf; h=25ft; Cat. II; Exp B; Enclosed; MWFRS (envelope) gable end zone and C-C Exterior(2) -0-10-8 to 2-1-8, Interior(1) 2-1-8 to 3-0-0, Exterior(2) 3-0-0 to 4-5-4 zone;C-C for members and forces & MWFRS for reactions shown; Lumber DOL=1.60 plate grip DOL=1.60
3) Provide adequate drainage to prevent water ponding.
4) This truss has been designed for a 10.0 psf bottom chord live load nonconcurrent with any other live loads.
5) * This truss has been designed for a live load of 20.0psf on the bottom chord in all areas where a rectangle 3-6-0 tall by 2-0-0 wide will fit between the bottom chord and any other members.
6) Refer to girder(s) for truss to truss connections.
7) Provide mechanical connection (by others) of truss to bearing plate capable of withstanding 100 lb uplift at joint(s) 4, 2, 5.
8) Graphical purlin representation does not depict the size or the orientation of the purlin along the top and/or bottom chord.

May 1,2019

WARNING - Verify design parameters and READ NOTES ON THIS AND INCLUDED MITEK REFERENCE PAGE MII-7473 rev. 10/03/2015 BEFORE USE.
Design valid for use only with MiTek® connectors. This design is based only upon parameters shown, and is for an individual building component, not a truss system. Before use, the building designer must verify the applicability of design parameters and properly incorporate this design into the overall building design. Bracing indicated is to prevent buckling of individual truss web and/or chord members only. Additional temporary and permanent bracing is always required for stability and to prevent collapse with possible personal injury and property damage. For general guidance regarding the fabrication, storage, delivery, erection and bracing of trusses and truss systems, see **ANSI/TPI1 Quality Criteria, DSB-89 and BCSI Building Component Safety Information** available from Truss Plate Institute, 218 N. Lee Street, Suite 312, Alexandria, VA 22314.

ENGINEERING BY TRENCO A MiTek Affiliate
818 Soundside Road
Edenton, NC 27932

Job	Truss	Truss Type	Qty	Ply	149.2115 C CVP
20595A	J3	Jack-Open Girder	2	1	I36927214 Job Reference (optional)

84 Components (Dunn), Dunn, NC - 28334, 8.220 s Nov 16 2018 MiTek Industries, Inc. Tue Apr 30 16:12:12 2019 Page 1
ID:bNZHYySm82JAWDNgfw9uCLzLbIt-C?PFSeqD2?tUAULIF60rT6nZA6cTnUHYSSuqbMzLTvH

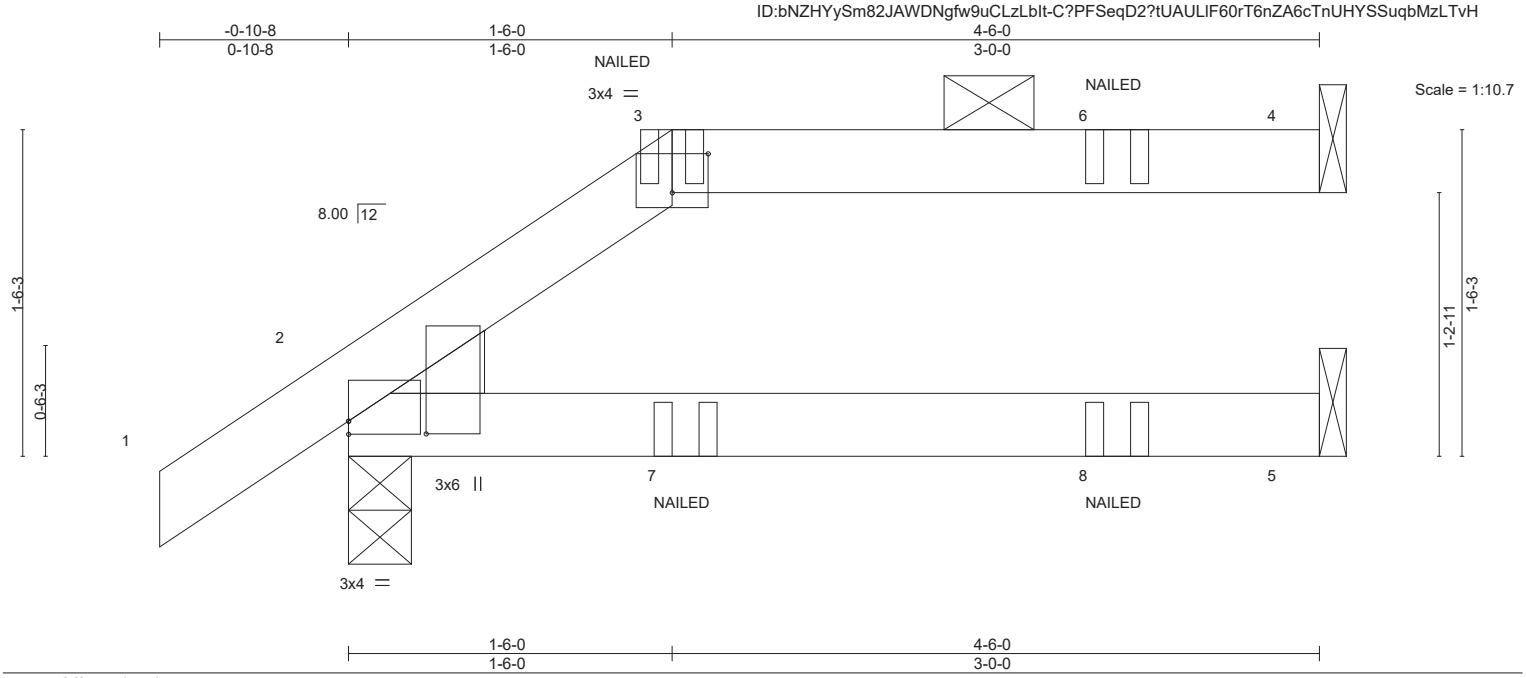

Plate Offsets (X,Y)-- [2:0-0-11,0-4-5], [2:0-0-0,0-0-12], [3:0-2-0,0-2-3]

LOADING (psf)		SPACING- 2-0-0		CSI.		DEFL.	in	(loc)	l/defl	L/d	PLATES	GRIP
TCLL	20.0	Plate Grip DOL	1.15	TC	0.30	Vert(LL)	-0.02	2-5	>999	240	MT20	244/190
TCDL	10.0	Lumber DOL	1.15	BC	0.22	Vert(CT)	-0.04	2-5	>999	180		
BCLL	0.0 *	Rep Stress Incr	NO	WB	0.00	Horz(CT)	0.03	4	n/a	n/a		
BCDL	10.0	Code IRC2015/TPI2014		Matrix-P							Weight: 16 lb	FT = 20%

LUMBER-
TOP CHORD 2x4 SP No.2
BOT CHORD 2x4 SP No.2
WEDGE
Left: 2x4 SP No.3

BRACING-
TOP CHORD Structural wood sheathing directly applied or 4-6-0 oc purlins, except 2-0-0 oc purlins: 3-4.
BOT CHORD Rigid ceiling directly applied or 10-0-0 oc bracing.

REACTIONS. (lb/size) 4=114/Mechanical, 2=242/0-3-8, 5=53/Mechanical
Max Horz 2=60(LC 35)
Max Uplift 4=-56(LC 9), 2=-46(LC 12)
Max Grav 4=114(LC 1), 2=242(LC 1), 5=85(LC 3)

FORCES. (lb) - Max. Comp./Max. Ten. - All forces 250 (lb) or less except when shown.

NOTES-
1) Unbalanced roof live loads have been considered for this design.
2) Wind: ASCE 7-10; Vult=130mph (3-second gust) Vasd=103mph; TCDL=6.0psf; BCDL=6.0psf; h=25ft; Cat. II; Exp B; Enclosed; MWFRS (envelope) gable end zone and C-C Exterior(2) zone;C-C for members and forces & MWFRS for reactions shown; Lumber DOL=1.60 plate grip DOL=1.60
3) Provide adequate drainage to prevent water ponding.
4) This truss has been designed for a 10.0 psf bottom chord live load nonconcurrent with any other live loads.
5) * This truss has been designed for a live load of 20.0psf on the bottom chord in all areas where a rectangle 3-6-0 tall by 2-0-0 wide will fit between the bottom chord and any other members.
6) Refer to girder(s) for truss to truss connections.
7) Provide mechanical connection (by others) of truss to bearing plate capable of withstanding 100 lb uplift at joint(s) 4.
8) One RT7A USP connectors recommended to connect truss to bearing walls due to UPLIFT at jt(s) 2. This connection is for uplift only and does not consider lateral forces.
9) Graphical purlin representation does not depict the size or the orientation of the purlin along the top and/or bottom chord.
10) "NAILED" indicates 3-10d (0.148"x3") or 3-12d (0.148"x3.25") toe-nails per NDS guidlines.
11) In the LOAD CASE(S) section, loads applied to the face of the truss are noted as front (F) or back (B).

LOAD CASE(S) Standard
1) Dead + Roof Live (balanced): Lumber Increase=1.15, Plate Increase=1.15
Uniform Loads (plf)
Vert: 1-3=-60, 3-4=-60, 2-5=-20
Concentrated Loads (lb)
Vert: 7=-1(B) 8=-2(B)

May 1,2019

WARNING - Verify design parameters and READ NOTES ON THIS AND INCLUDED MITEK REFERENCE PAGE MII-7473 rev. 10/03/2015 BEFORE USE.
Design valid for use only with MiTek® connectors. This design is based only upon parameters shown, and is for an individual building component, not a truss system. Before use, the building designer must verify the applicability of design parameters and properly incorporate this design into the overall building design. Bracing indicated is to prevent buckling of individual truss web and/or chord members only. Additional temporary and permanent bracing is always required for stability and to prevent collapse with possible personal injury and property damage. For general guidance regarding the fabrication, storage, delivery, erection and bracing of trusses and truss systems, see **ANSI/TPI1 Quality Criteria, DSB-89 and BCSI Building Component Safety Information** available from Truss Plate Institute, 218 N. Lee Street, Suite 312, Alexandria, VA 22314.

ENGINEERING BY TRENCO A MiTek Affiliate
818 Soundside Road
Edenton, NC 27932

Job	Truss	Truss Type	Qty	Ply	149.2115 C CVP
20595A	J4	Jack-Open	4	1	I36927215 Job Reference (optional)

84 Components (Dunn), Dunn, NC - 28334, 8.220 s Nov 16 2018 MiTek Industries, Inc. Tue Apr 30 16:12:13 2019 Page 1
ID:bNZHYySm82JAWDNgfw9uCLzLbIt-gCzeg_rrpJ?LodwxppX4?KKnVW?RWxWhh6dN7pzLTvG

-0-10-8 2-4-0
0-10-8 2-4-0

Scale = 1:10.4

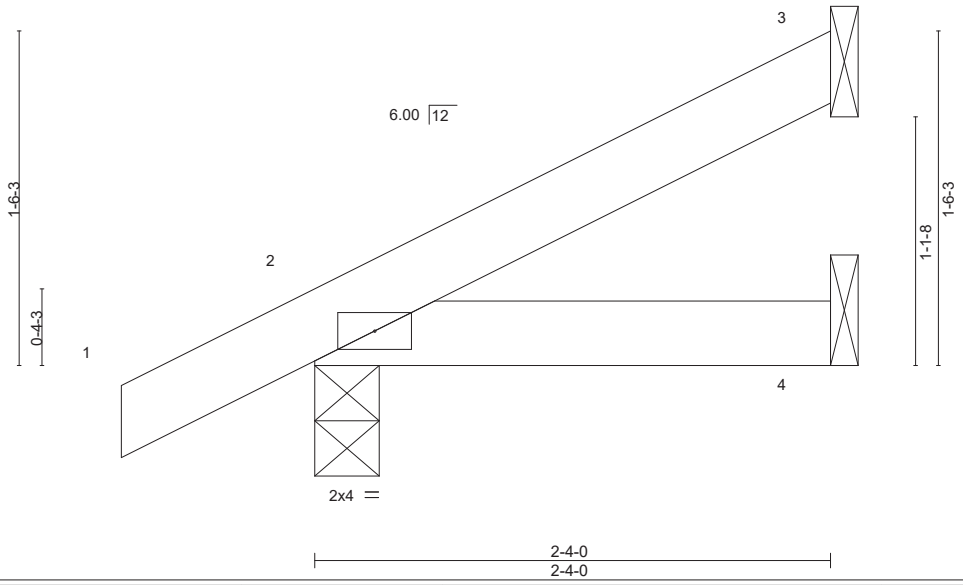

LOADING (psf)		SPACING- 2-0-0		CSI.		DEFL. in (loc) l/defl L/d		PLATES GRIP
TCLL	20.0	Plate Grip DOL	1.15	TC	0.07	Vert(LL) -0.00 2-4 >999 240		MT20 244/190
TCDL	10.0	Lumber DOL	1.15	BC	0.05	Vert(CT) -0.00 2-4 >999 180		
BCLL	0.0 *	Rep Stress Incr	YES	WB	0.00	Horz(CT) -0.00 3 n/a n/a		
BCDL	10.0	Code IRC2015/TPI2014		Matrix-P				Weight: 9 lb FT = 20%

LUMBER-
TOP CHORD 2x4 SP No.2
BOT CHORD 2x4 SP No.2

BRACING-
TOP CHORD Structural wood sheathing directly applied or 2-4-0 oc purlins.
BOT CHORD Rigid ceiling directly applied or 10-0-0 oc bracing.

REACTIONS. (lb/size) 3=49/Mechanical, 2=161/0-3-8, 4=21/Mechanical
Max Horz 2=59(LC 12)
Max Uplift 3=-34(LC 12), 2=-31(LC 12)
Max Grav 3=49(LC 1), 2=161(LC 1), 4=42(LC 3)

FORCES. (lb) - Max. Comp./Max. Ten. - All forces 250 (lb) or less except when shown.

NOTES-
1) Wind: ASCE 7-10; Vult=130mph (3-second gust) Vasd=103mph; TCDL=6.0psf; BCDL=6.0psf; h=25ft; Cat. II; Exp B; Enclosed; MWFRS (envelope) gable end zone and C-C Exterior(2) zone;C-C for members and forces & MWFRS for reactions shown; Lumber DOL=1.60 plate grip DOL=1.60
2) This truss has been designed for a 10.0 psf bottom chord live load nonconcurrent with any other live loads.
3) * This truss has been designed for a live load of 20.0psf on the bottom chord in all areas where a rectangle 3-6-0 tall by 2-0-0 wide will fit between the bottom chord and any other members.
4) Refer to girder(s) for truss to truss connections.
5) Provide mechanical connection (by others) of truss to bearing plate capable of withstanding 100 lb uplift at joint(s) 3.
6) One RT7A USP connectors recommended to connect truss to bearing walls due to UPLIFT at jt(s) 2. This connection is for uplift only and does not consider lateral forces.

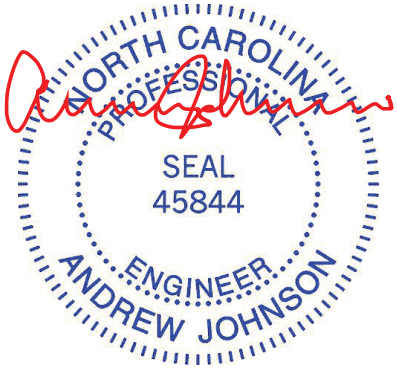

May 1,2019

WARNING - Verify design parameters and READ NOTES ON THIS AND INCLUDED MITEK REFERENCE PAGE MII-7473 rev. 10/03/2015 BEFORE USE.
Design valid for use only with MiTek® connectors. This design is based only upon parameters shown, and is for an individual building component, not a truss system. Before use, the building designer must verify the applicability of design parameters and properly incorporate this design into the overall building design. Bracing indicated is to prevent buckling of individual truss web and/or chord members only. Additional temporary and permanent bracing is always required for stability and to prevent collapse with possible personal injury and property damage. For general guidance regarding the fabrication, storage, delivery, erection and bracing of trusses and truss systems, see **ANSI/TPI1 Quality Criteria, DSB-89 and BCSI Building Component Safety Information** available from Truss Plate Institute, 218 N. Lee Street, Suite 312, Alexandria, VA 22314.

ENGINEERING BY TRENCO A MiTek Affiliate
818 Soundside Road
Edenton, NC 27932

Job	Truss	Truss Type	Qty	Ply	149.2115 C CVP
20595A	JE	Jack-Open Supported Gable	1	1	I36927216 Job Reference (optional)

84 Components (Dunn), Dunn, NC - 28334, 8.220 s Nov 16 2018 MiTek Industries, Inc. Tue Apr 30 16:12:14 2019 Page 1
ID:bNZHYySm82JAWDNgfw9uCLzLbIt-8OW0tKrTZd7CQnV7NX2JYXsy_wLeFO7rvmNxfFzLTvF

-0-10-8 4-6-0
0-10-8 4-6-0

Scale = 1:20.5

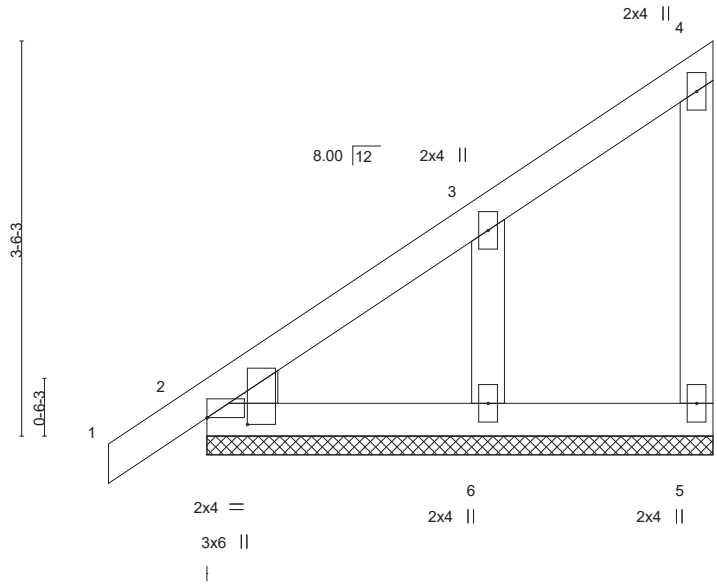

Plate Offsets (X,Y)-- [2:0-0-0,0-0-0], [2:0-0-11,0-4-5]

LOADING (psf)		SPACING-	2-0-0	CSI.		DEFL.	in	(loc)	l/defl	L/d	PLATES	GRIP
TCLL	20.0	Plate Grip DOL	1.15	TC	0.09	Vert(LL)	-0.00	1	n/r	120	MT20	244/190
TCDL	10.0	Lumber DOL	1.15	BC	0.05	Vert(CT)	0.00	1	n/r	120		
BCLL	0.0 *	Rep Stress Incr	YES	WB	0.04	Horz(CT)	0.00		n/a	n/a		
BCDL	10.0	Code IRC2015/TPI2014		Matrix-P							Weight: 24 lb	FT = 20%

LUMBER-
TOP CHORD 2x4 SP No.2
BOT CHORD 2x4 SP No.2
WEBS 2x4 SP No.3
OTHERS 2x4 SP No.3
WEDGE
Left: 2x4 SP No.3

BRACING-
TOP CHORD Structural wood sheathing directly applied or 4-6-0 oc purlins, except end verticals.
BOT CHORD Rigid ceiling directly applied or 10-0-0 oc bracing.

REACTIONS. (lb/size) 5=51/4-6-0, 2=144/4-6-0, 6=206/4-6-0
Max Horz 2=133(LC 12)
Max Uplift 5=-20(LC 12), 6=-91(LC 12)
Max Grav 5=54(LC 19), 2=144(LC 1), 6=223(LC 19)

FORCES. (lb) - Max. Comp./Max. Ten. - All forces 250 (lb) or less except when shown.

NOTES-
1) Wind: ASCE 7-10; Vult=130mph (3-second gust) Vasd=103mph; TCDL=6.0psf; BCDL=6.0psf; h=25ft; Cat. II; Exp B; Enclosed; MWFRS (envelope) gable end zone and C-C Corner(3) -0-10-8 to 2-1-8, Exterior(2) 2-1-8 to 4-4-4 zone;C-C for members and forces & MWFRS for reactions shown; Lumber DOL=1.60 plate grip DOL=1.60
2) Truss designed for wind loads in the plane of the truss only. For studs exposed to wind (normal to the face), see Standard Industry Gable End Details as applicable, or consult qualified building designer as per ANSI/TPI 1.
3) Gable requires continuous bottom chord bearing.
4) Gable studs spaced at 2-0-0 oc.
5) This truss has been designed for a 10.0 psf bottom chord live load nonconcurrent with any other live loads.
6) * This truss has been designed for a live load of 20.0psf on the bottom chord in all areas where a rectangle 3-6-0 tall by 2-0-0 wide will fit between the bottom chord and any other members.
7) Provide mechanical connection (by others) of truss to bearing plate capable of withstanding 100 lb uplift at joint(s) 5, 6.

May 1,2019

WARNING - Verify design parameters and READ NOTES ON THIS AND INCLUDED MITEK REFERENCE PAGE MII-7473 rev. 10/03/2015 BEFORE USE.
Design valid for use only with MiTek® connectors. This design is based only upon parameters shown, and is for an individual building component, not a truss system. Before use, the building designer must verify the applicability of design parameters and properly incorporate this design into the overall building design. Bracing indicated is to prevent buckling of individual truss web and/or chord members only. Additional temporary and permanent bracing is always required for stability and to prevent collapse with possible personal injury and property damage. For general guidance regarding the fabrication, storage, delivery, erection and bracing of trusses and truss systems, see **ANSI/TPI1 Quality Criteria, DSB-89 and BCSI Building Component Safety Information** available from Truss Plate Institute, 218 N. Lee Street, Suite 312, Alexandria, VA 22314.

ENGINEERING BY TRENCO A MiTek Affiliate
818 Soundside Road
Edenton, NC 27932

Job	Truss	Truss Type	Qty	Ply	149.2115 C CVP
20595A	PB1	Piggyback	1	1	I36927219 Job Reference (optional)

84 Components (Dunn), Dunn, NC - 28334, 8.220 s Nov 16 2018 MiTek Industries, Inc. Tue Apr 30 16:12:16 2019 Page 1
ID:bNZHYySm82JAWDNgfw9uCLzLbIt-4memI0tj5ENwf5eWUy5ndyyA3jtLjIG7N4s2k7zLTvD

2-2-0 | 8-2-0 | 10-4-0
2-2-0 | 6-0-0 | 2-2-0

Scale = 1:17.7

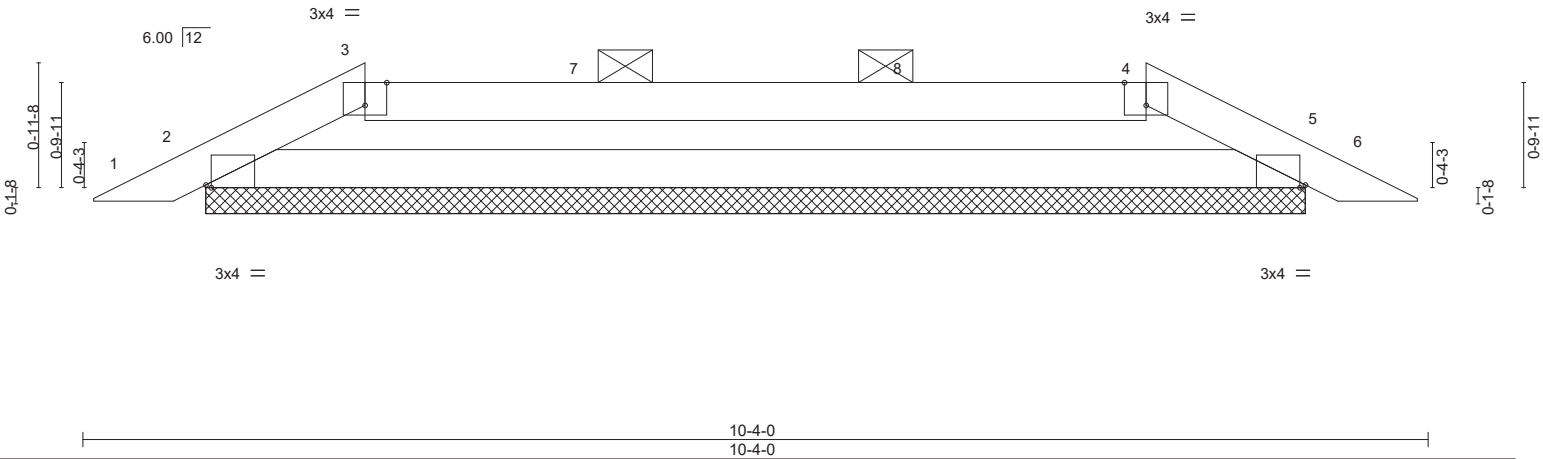

Plate Offsets (X,Y)-- [2:0-0-8,Edge], [3:0-2-0,Edge], [4:0-2-0,Edge], [5:0-0-8,Edge]

LOADING (psf)		SPACING- 2-0-0		CSI.		DEFL. in (loc) l/defl L/d					PLATES	GRIP
TCLL	20.0	Plate Grip DOL	1.15	TC	0.56	Vert(LL)	0.00	6	n/r	120	MT20	244/190
TCDL	10.0	Lumber DOL	1.15	BC	0.68	Vert(CT)	0.01	6	n/r	120		
BCLL	0.0 *	Rep Stress Incr	YES	WB	0.00	Horz(CT)	0.01	5	n/a	n/a		
BCDL	10.0	Code IRC2015/TPI2014		Matrix-R							Weight: 28 lb	FT = 20%

LUMBER-
TOP CHORD 2x4 SP No.2
BOT CHORD 2x4 SP No.2

BRACING-
TOP CHORD Structural wood sheathing directly applied or 6-0-0 oc purlins, except 2-0-0 oc purlins (5-6-4 max.): 3-4.
BOT CHORD Rigid ceiling directly applied or 10-0-0 oc bracing.

REACTIONS. (lb/size) 2=371/8-5-6, 5=371/8-5-6
Max Horz 2=14(LC 16)
Max Uplift 2=-45(LC 9), 5=-45(LC 8)

FORCES. (lb) - Max. Comp./Max. Ten. - All forces 250 (lb) or less except when shown.
TOP CHORD 2-3=-759/320, 3-4=-719/299, 4-5=-759/320
BOT CHORD 2-5=-257/719

NOTES-
1) Unbalanced roof live loads have been considered for this design.
2) Wind: ASCE 7-10; Vult=130mph (3-second gust) Vasd=103mph; TCDL=6.0psf; BCDL=6.0psf; h=25ft; Cat. II; Exp B; Enclosed; MWFRS (envelope) gable end zone and C-C Exterior(2) 0-4-11 to 6-4-15, Interior(1) 6-4-15 to 8-2-0, Exterior(2) 8-2-0 to 9-11-5 zone;C-C for members and forces & MWFRS for reactions shown; Lumber DOL=1.60 plate grip DOL=1.60
3) Provide adequate drainage to prevent water ponding.
4) Gable requires continuous bottom chord bearing.
5) This truss has been designed for a 10.0 psf bottom chord live load nonconcurrent with any other live loads.
6) * This truss has been designed for a live load of 20.0psf on the bottom chord in all areas where a rectangle 3-6-0 tall by 2-0-0 wide will fit between the bottom chord and any other members.
7) Provide mechanical connection (by others) of truss to bearing plate capable of withstanding 100 lb uplift at joint(s) 2, 5.
8) See Standard Industry Piggyback Truss Connection Detail for Connection to base truss as applicable, or consult qualified building designer.
9) Graphical purlin representation does not depict the size or the orientation of the purlin along the top and/or bottom chord.

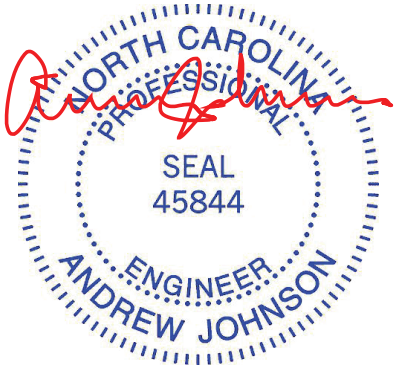

May 1,2019

WARNING - Verify design parameters and READ NOTES ON THIS AND INCLUDED MITEK REFERENCE PAGE MII-7473 rev. 10/03/2015 BEFORE USE.
Design valid for use only with MiTek® connectors. This design is based only upon parameters shown, and is for an individual building component, not a truss system. Before use, the building designer must verify the applicability of design parameters and properly incorporate this design into the overall building design. Bracing indicated is to prevent buckling of individual truss web and/or chord members only. Additional temporary and permanent bracing is always required for stability and to prevent collapse with possible personal injury and property damage. For general guidance regarding the fabrication, storage, delivery, erection and bracing of trusses and truss systems, see **ANSI/TPI1 Quality Criteria, DSB-89 and BCSI Building Component Safety Information** available from Truss Plate Institute, 218 N. Lee Street, Suite 312, Alexandria, VA 22314.

ENGINEERING BY TRENCO A MiTek Affiliate
818 Soundside Road
Edenton, NC 27932

Job	Truss	Truss Type	Qty	Ply	149.2115 C CVP
20595A	PB2	Piggyback	7	1	I36927220 Job Reference (optional)

84 Components (Dunn), Dunn, NC - 28334, 8.220 s Nov 16 2018 MiTek Industries, Inc. Tue Apr 30 16:12:17 2019 Page 1
ID:bNZHYySm82JAWDNgfw9uCLzLbIt-YzC8VMuLsYVnHFDi2fc0AAUOO7LKSlnHckbbGazLTvC

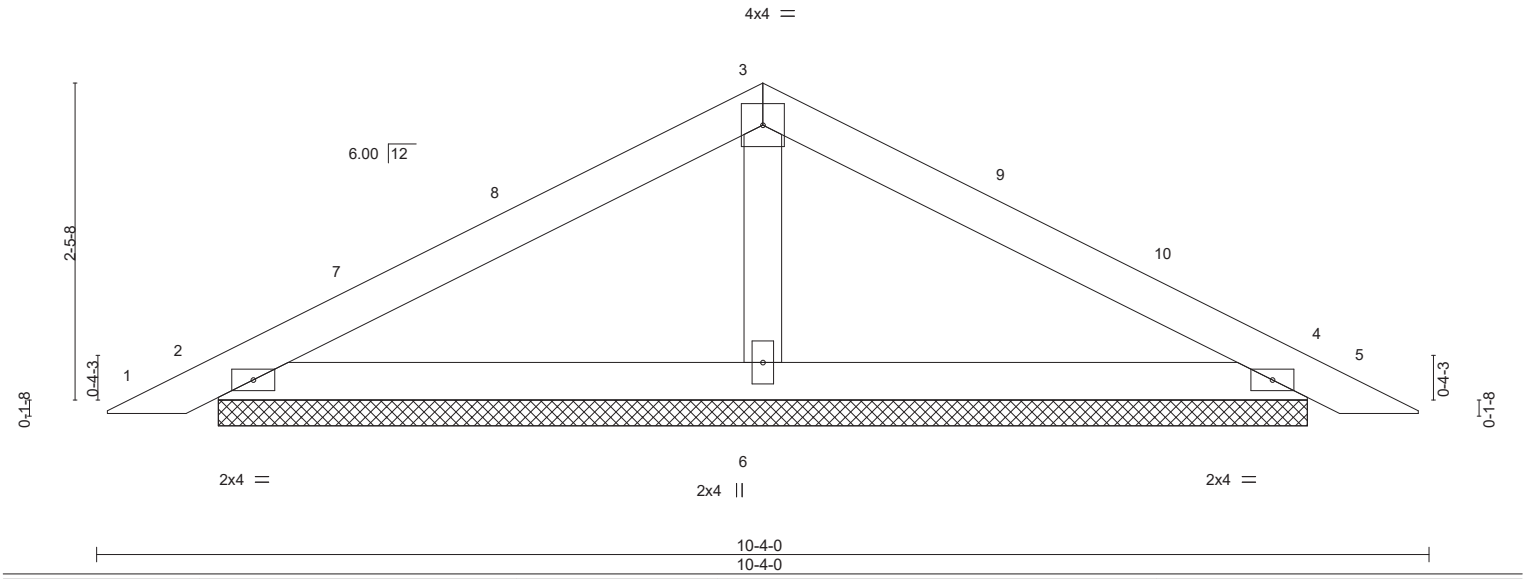

LOADING (psf)		SPACING- 2-0-0		CSI.		DEFL. in (loc) l/defl L/d		PLATES GRIP
TCLL	20.0	Plate Grip DOL	1.15	TC	0.33	Vert(LL) 0.01 5 n/r 120		MT20 244/190
TCDL	10.0	Lumber DOL	1.15	BC	0.18	Vert(CT) 0.02 5 n/r 120		
BCLL	0.0 *	Rep Stress Incr	YES	WB	0.05	Horz(CT) 0.00 4 n/a n/a		
BCDL	10.0	Code IRC2015/TPI2014		Matrix-P				Weight: 32 lb FT = 20%

LUMBER-
TOP CHORD 2x4 SP No.2
BOT CHORD 2x4 SP No.2
OTHERS 2x4 SP No.3

BRACING-
TOP CHORD Structural wood sheathing directly applied or 6-0-0 oc purlins.
BOT CHORD Rigid ceiling directly applied or 10-0-0 oc bracing.

REACTIONS. (lb/size) 2=207/8-5-6, 4=207/8-5-6, 6=329/8-5-6
Max Horz 2=-40(LC 17)
Max Uplift 2=-53(LC 12), 4=-60(LC 13)

FORCES. (lb) - Max. Comp./Max. Ten. - All forces 250 (lb) or less except when shown.

NOTES-
1) Unbalanced roof live loads have been considered for this design.
2) Wind: ASCE 7-10; Vult=130mph (3-second gust) Vasd=103mph; TCDL=6.0psf; BCDL=6.0psf; h=25ft; Cat. II; Exp B; Enclosed; MWFRS (envelope) gable end zone and C-C Exterior(2) 0-4-11 to 3-4-11, Interior(1) 3-4-11 to 5-2-0, Exterior(2) 5-2-0 to 8-2-0, Interior(1) 8-2-0 to 9-11-5 zone;C-C for members and forces & MWFRS for reactions shown; Lumber DOL=1.60 plate grip DOL=1.60
3) Gable requires continuous bottom chord bearing.
4) This truss has been designed for a 10.0 psf bottom chord live load nonconcurrent with any other live loads.
5) * This truss has been designed for a live load of 20.0psf on the bottom chord in all areas where a rectangle 3-6-0 tall by 2-0-0 wide will fit between the bottom chord and any other members.
6) Provide mechanical connection (by others) of truss to bearing plate capable of withstanding 100 lb uplift at joint(s) 2, 4.
7) See Standard Industry Piggyback Truss Connection Detail for Connection to base truss as applicable, or consult qualified building designer.

May 1,2019

WARNING - Verify design parameters and READ NOTES ON THIS AND INCLUDED MITEK REFERENCE PAGE MII-7473 rev. 10/03/2015 BEFORE USE.
Design valid for use only with MiTek® connectors. This design is based only upon parameters shown, and is for an individual building component, not a truss system. Before use, the building designer must verify the applicability of design parameters and properly incorporate this design into the overall building design. Bracing indicated is to prevent buckling of individual truss web and/or chord members only. Additional temporary and permanent bracing is always required for stability and to prevent collapse with possible personal injury and property damage. For general guidance regarding the fabrication, storage, delivery, erection and bracing of trusses and truss systems, see **ANSI/TPI1 Quality Criteria, DSB-89 and BCSI Building Component Safety Information** available from Truss Plate Institute, 218 N. Lee Street, Suite 312, Alexandria, VA 22314.

ENGINEERING BY TRENCO A MiTek Affiliate
818 Soundside Road
Edenton, NC 27932

Job	Truss	Truss Type	Qty	Ply	149.2115 C CVP
20595A	PB3	Piggyback	1	1	I36927221 Job Reference (optional)

84 Components (Dunn), Dunn, NC - 28334, 8.220 s Nov 16 2018 MiTek Industries, Inc. Tue Apr 30 16:12:18 2019 Page 1
ID:bNZHYySm82JAWDNgfw9uCLzLbIt-09mXjiv_drdeuPoucN7FiN1YiXZ3BCmQqOL8o0zLTvB

2-6-0 | 7-10-0 | 10-4-0
2-6-0 | 5-4-0 | 2-6-0

Scale = 1:17.7

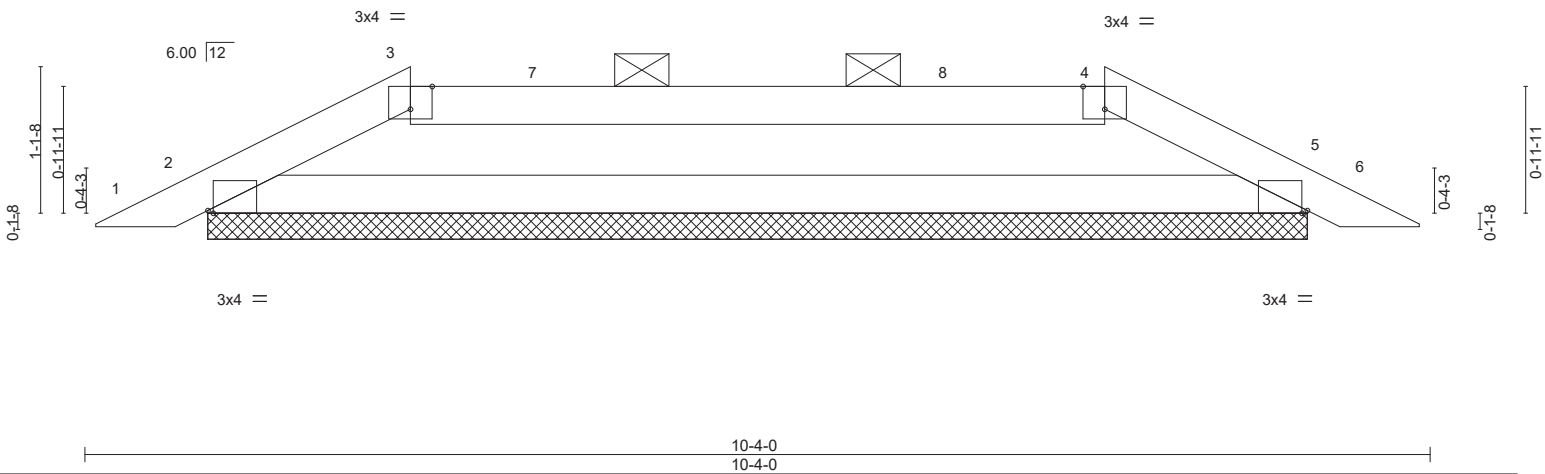

Plate Offsets (X,Y)-- [2:0-0-8,Edge], [3:0-2-0,Edge], [4:0-2-0,Edge], [5:0-0-8,Edge]

LOADING (psf)		SPACING- 2-0-0		CSI.		DEFL. in (loc) l/defl L/d					PLATES	GRIP
TCLL	20.0	Plate Grip DOL	1.15	TC	0.42	Vert(LL)	0.00	6	n/r	120	MT20	244/190
TCDL	10.0	Lumber DOL	1.15	BC	0.66	Vert(CT)	0.01	6	n/r	120		
BCLL	0.0 *	Rep Stress Incr	YES	WB	0.00	Horz(CT)	0.01	5	n/a	n/a		
BCDL	10.0	Code IRC2015/TPI2014		Matrix-R							Weight: 29 lb	FT = 20%

LUMBER-
TOP CHORD 2x4 SP No.2
BOT CHORD 2x4 SP No.2

BRACING-
TOP CHORD Structural wood sheathing directly applied or 6-0-0 oc purlins, except 2-0-0 oc purlins (6-0-0 max.): 3-4.
BOT CHORD Rigid ceiling directly applied or 10-0-0 oc bracing.

REACTIONS. (lb/size) 2=371/8-5-6, 5=371/8-5-6
Max Horz 2=-16(LC 17)
Max Uplift 2=-40(LC 9), 5=-40(LC 8)

FORCES. (lb) - Max. Comp./Max. Ten. - All forces 250 (lb) or less except when shown.
TOP CHORD 2-3=-659/300, 3-4=-609/282, 4-5=-659/300
BOT CHORD 2-5=-232/609

NOTES-
1) Unbalanced roof live loads have been considered for this design.
2) Wind: ASCE 7-10; Vult=130mph (3-second gust) Vasd=103mph; TCDL=6.0psf; BCDL=6.0psf; h=25ft; Cat. II; Exp B; Enclosed; MWFRS (envelope) gable end zone and C-C Exterior(2) 0-4-11 to 6-8-15, Interior(1) 6-8-15 to 7-10-0, Exterior(2) 7-10-0 to 9-11-5 zone;C-C for members and forces & MWFRS for reactions shown; Lumber DOL=1.60 plate grip DOL=1.60
3) Provide adequate drainage to prevent water ponding.
4) Gable requires continuous bottom chord bearing.
5) This truss has been designed for a 10.0 psf bottom chord live load nonconcurrent with any other live loads.
6) * This truss has been designed for a live load of 20.0psf on the bottom chord in all areas where a rectangle 3-6-0 tall by 2-0-0 wide will fit between the bottom chord and any other members.
7) Provide mechanical connection (by others) of truss to bearing plate capable of withstanding 100 lb uplift at joint(s) 2, 5.
8) See Standard Industry Piggyback Truss Connection Detail for Connection to base truss as applicable, or consult qualified building designer.
9) Graphical purlin representation does not depict the size or the orientation of the purlin along the top and/or bottom chord.

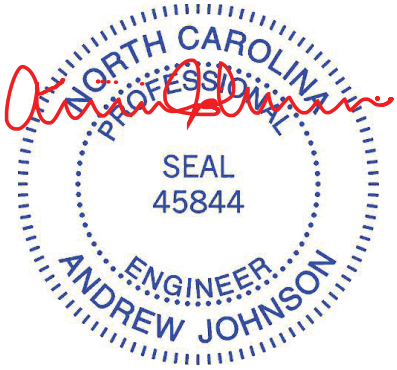

May 1,2019

WARNING - Verify design parameters and READ NOTES ON THIS AND INCLUDED MITEK REFERENCE PAGE MII-7473 rev. 10/03/2015 BEFORE USE.
Design valid for use only with MiTek® connectors. This design is based only upon parameters shown, and is for an individual building component, not a truss system. Before use, the building designer must verify the applicability of design parameters and properly incorporate this design into the overall building design. Bracing indicated is to prevent buckling of individual truss web and/or chord members only. Additional temporary and permanent bracing is always required for stability and to prevent collapse with possible personal injury and property damage. For general guidance regarding the fabrication, storage, delivery, erection and bracing of trusses and truss systems, see **ANSI/TPI1 Quality Criteria, DSB-89 and BCSI Building Component Safety Information** available from Truss Plate Institute, 218 N. Lee Street, Suite 312, Alexandria, VA 22314.

ENGINEERING BY TRENCO A MiTek Affiliate
818 Soundside Road
Edenton, NC 27932

Job	Truss	Truss Type	Qty	Ply	149.2115 C CVP
20595A	VA1	GABLE	1	1	I36927226 Job Reference (optional)

84 Components (Dunn), Dunn, NC - 28334, 8.220 s Nov 16 2018 MiTek Industries, Inc. Tue Apr 30 16:12:22 2019 Page 1
ID:bNZHYySm82JAWDNgfw9uCLzLbIt-vw?1Z3yUh473N06grCCBtDCIZ82I7_g0l?JMxnzLTv7

Scale = 1:30.1

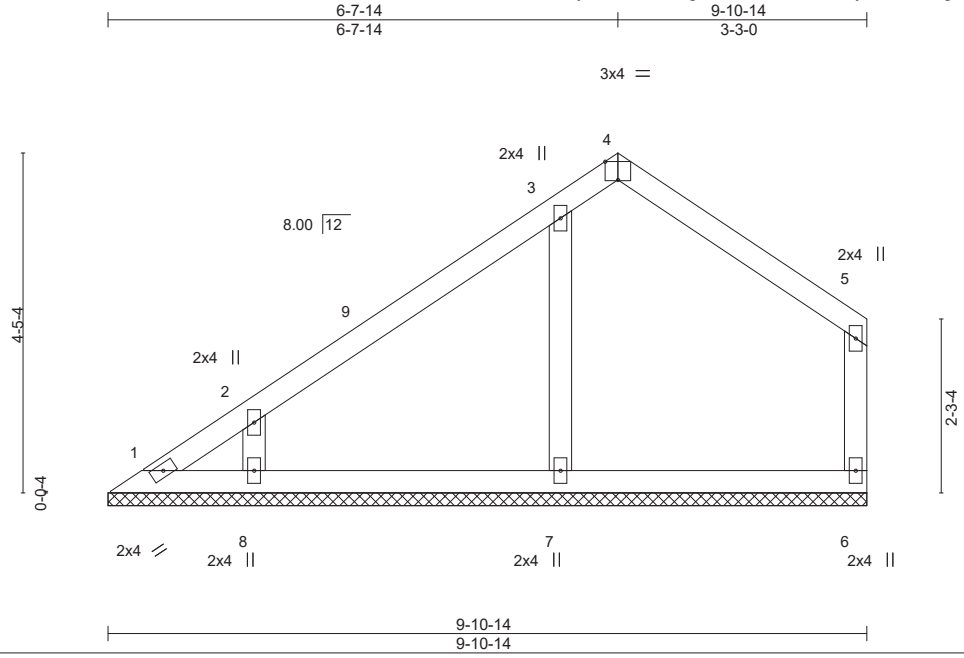

Plate Offsets (X,Y)-- [4:0-2-0,Edge]

LOADING (psf)		SPACING-	2-0-0	CSI.		DEFL.	in	(loc)	l/defl	L/d	PLATES	GRIP
TCLL	20.0	Plate Grip DOL	1.15	TC	0.18	Vert(LL)	n/a	-	n/a	999	MT20	244/190
TCDL	10.0	Lumber DOL	1.15	BC	0.13	Vert(CT)	n/a	-	n/a	999		
BCLL	0.0 *	Rep Stress Incr	YES	WB	0.07	Horz(CT)	0.00	6	n/a	n/a		
BCDL	10.0	Code IRC2015/TPI2014		Matrix-S							Weight: 41 lb	FT = 20%

LUMBER-
TOP CHORD 2x4 SP No.2
BOT CHORD 2x4 SP No.2
WEBS 2x4 SP No.3
OTHERS 2x4 SP No.3

BRACING-
TOP CHORD Structural wood sheathing directly applied or 6-0-0 oc purlins, except end verticals.
BOT CHORD Rigid ceiling directly applied or 10-0-0 oc bracing.

REACTIONS. All bearings 9-10-14.
(lb) - Max Horz 1=114(LC 12)
Max Uplift All uplift 100 lb or less at joint(s) 1, 6, 7 except 8=-125(LC 12)
Max Grav All reactions 250 lb or less at joint(s) 1, 6 except 7=330(LC 19), 8=290(LC 19)

FORCES. (lb) - Max. Comp./Max. Ten. - All forces 250 (lb) or less except when shown.

NOTES-
1) Unbalanced roof live loads have been considered for this design.
2) Wind: ASCE 7-10; Vult=130mph (3-second gust) Vasd=103mph; TCDL=6.0psf; BCDL=6.0psf; h=25ft; Cat. II; Exp B; Enclosed; MWFRS (envelope) gable end zone and C-C Exterior(2) 0-5-12 to 3-5-12, Interior(1) 3-5-12 to 6-7-14, Exterior(2) 6-7-14 to 9-9-2 zone;C-C for members and forces & MWFRS for reactions shown; Lumber DOL=1.60 plate grip DOL=1.60
3) Gable requires continuous bottom chord bearing.
4) This truss has been designed for a 10.0 psf bottom chord live load nonconcurrent with any other live loads.
5) * This truss has been designed for a live load of 20.0psf on the bottom chord in all areas where a rectangle 3-6-0 tall by 2-0-0 wide will fit between the bottom chord and any other members.
6) Provide mechanical connection (by others) of truss to bearing plate capable of withstanding 100 lb uplift at joint(s) 1, 6, 7 except (jt=lb) 8=125.

NORTH CAROLINA PROFESSIONAL SEAL 45844 ENGINEER ANDREW JOHNSON

May 1,2019

WARNING - Verify design parameters and READ NOTES ON THIS AND INCLUDED MITEK REFERENCE PAGE MII-7473 rev. 10/03/2015 BEFORE USE.
Design valid for use only with MiTek® connectors. This design is based only upon parameters shown, and is for an individual building component, not a truss system. Before use, the building designer must verify the applicability of design parameters and properly incorporate this design into the overall building design. Bracing indicated is to prevent buckling of individual truss web and/or chord members only. Additional temporary and permanent bracing is always required for stability and to prevent collapse with possible personal injury and property damage. For general guidance regarding the fabrication, storage, delivery, erection and bracing of trusses and truss systems, see **ANSI/TPI1 Quality Criteria, DSB-89 and BCSI Building Component Safety Information** available from Truss Plate Institute, 218 N. Lee Street, Suite 312, Alexandria, VA 22314.

ENGINEERING BY TRENCO A MiTek Affiliate
818 Soundside Road
Edenton, NC 27932

Job	Truss	Truss Type	Qty	Ply	149.2115 C CVP
20595A	VA2	GABLE	1	1	I36927227 Job Reference (optional)

84 Components (Dunn), Dunn, NC - 28334, 8.220 s Nov 16 2018 MiTek Industries, Inc. Tue Apr 30 16:12:22 2019 Page 1
ID:bNZHYySm82JAWDNgfw9uCLzLbIt-vw?1Z3yUh473N06grCCBtDCHD8207?w0l?JMxnzLTv7

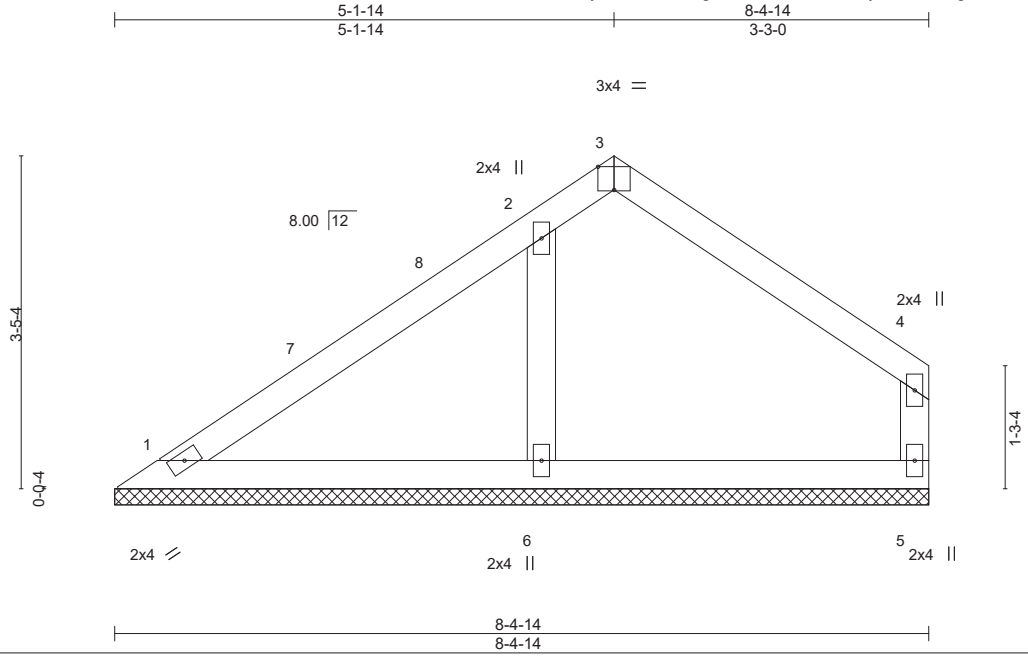

Plate Offsets (X,Y)-- [3:0-2-0,Edge]

LOADING (psf)		SPACING- 2-0-0		CSI.		DEFL. in (loc) l/defl L/d		PLATES	GRIP
TCLL	20.0	Plate Grip DOL	1.15	TC	0.20	Vert(LL) n/a - n/a 999		MT20	244/190
TCDL	10.0	Lumber DOL	1.15	BC	0.15	Vert(CT) n/a - n/a 999			
BCLL	0.0 *	Rep Stress Incr	YES	WB	0.05	Horz(CT) 0.00 5 n/a n/a			
BCDL	10.0	Code IRC2015/TPI2014		Matrix-S				Weight: 32 lb	FT = 20%

LUMBER-
TOP CHORD 2x4 SP No.2
BOT CHORD 2x4 SP No.2
WEBS 2x4 SP No.3
OTHERS 2x4 SP No.3

BRACING-
TOP CHORD Structural wood sheathing directly applied or 6-0-0 oc purlins, except end verticals.
BOT CHORD Rigid ceiling directly applied or 6-0-0 oc bracing.

REACTIONS. (lb/size) 1=145/8-4-14, 5=142/8-4-14, 6=335/8-4-14
Max Horz 1=75(LC 12)
Max Uplift 1=-20(LC 13), 5=-36(LC 13), 6=-88(LC 12)
Max Grav 1=145(LC 1), 5=164(LC 24), 6=359(LC 19)

FORCES. (lb) - Max. Comp./Max. Ten. - All forces 250 (lb) or less except when shown.
WEBS 2-6=-256/131

NOTES-
1) Unbalanced roof live loads have been considered for this design.
2) Wind: ASCE 7-10; Vult=130mph (3-second gust) Vasd=103mph; TCDL=6.0psf; BCDL=6.0psf; h=25ft; Cat. II; Exp B; Enclosed; MWFRS (envelope) gable end zone and C-C Exterior(2) 0-5-12 to 3-5-12, Interior(1) 3-5-12 to 5-1-14, Exterior(2) 5-1-14 to 8-3-2 zone;C-C for members and forces & MWFRS for reactions shown; Lumber DOL=1.60 plate grip DOL=1.60
3) Gable requires continuous bottom chord bearing.
4) This truss has been designed for a 10.0 psf bottom chord live load nonconcurrent with any other live loads.
5) * This truss has been designed for a live load of 20.0psf on the bottom chord in all areas where a rectangle 3-6-0 tall by 2-0-0 wide will fit between the bottom chord and any other members.
6) Provide mechanical connection (by others) of truss to bearing plate capable of withstanding 100 lb uplift at joint(s) 1, 5, 6.

NORTH CAROLINA PROFESSIONAL SEAL 45844 ENGINEER ANDREW JOHNSON
May 1,2019

WARNING - Verify design parameters and READ NOTES ON THIS AND INCLUDED MITEK REFERENCE PAGE MII-7473 rev. 10/03/2015 BEFORE USE.
Design valid for use only with MiTek® connectors. This design is based only upon parameters shown, and is for an individual building component, not a truss system. Before use, the building designer must verify the applicability of design parameters and properly incorporate this design into the overall building design. Bracing indicated is to prevent buckling of individual truss web and/or chord members only. Additional temporary and permanent bracing is always required for stability and to prevent collapse with possible personal injury and property damage. For general guidance regarding the fabrication, storage, delivery, erection and bracing of trusses and truss systems, see **ANSI/TPI1 Quality Criteria, DSB-89 and BCSI Building Component Safety Information** available from Truss Plate Institute, 218 N. Lee Street, Suite 312, Alexandria, VA 22314.

ENGINEERING BY TRENCO A MiTek Affiliate
818 Soundside Road
Edenton, NC 27932

Job	Truss	Truss Type	Qty	Ply	149.2115 C CVP
20595A	VA3	Valley	1	1	I36927228 Job Reference (optional)

84 Components (Dunn), Dunn, NC - 28334, 8.220 s Nov 16 2018 MiTek Industries, Inc. Tue Apr 30 16:12:23 2019 Page 1
ID:bNZHYySm82JAWDNgfw9uCLzLbIt-N7ZPmPy6SOFw?AhsOwjQPRkT7YPxsSV9_f2vUEzLTv6

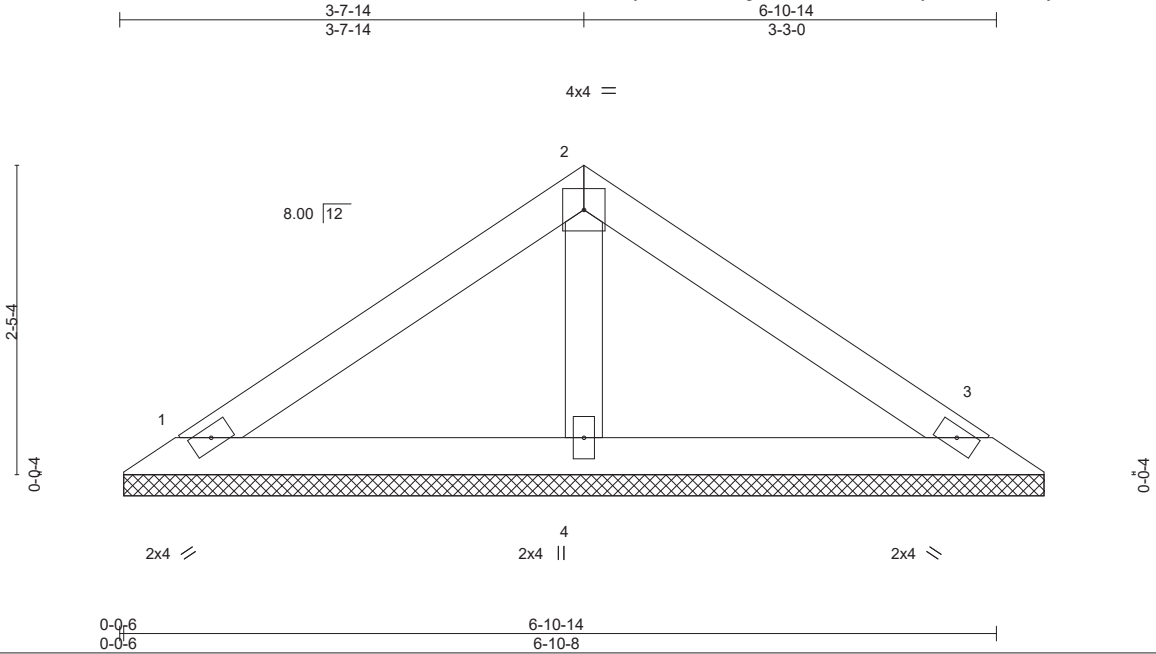

LOADING (psf)		SPACING- 2-0-0		CSI.		DEFL. in (loc) l/defl L/d		PLATES GRIP
TCLL	20.0	Plate Grip DOL	1.15	TC	0.19	Vert(LL) n/a - n/a 999		MT20 244/190
TCDL	10.0	Lumber DOL	1.15	BC	0.10	Vert(CT) n/a - n/a 999		
BCLL	0.0 *	Rep Stress Incr	YES	WB	0.03	Horz(CT) 0.00 3 n/a n/a		
BCDL	10.0	Code IRC2015/TPI2014		Matrix-P				Weight: 25 lb FT = 20%

LUMBER-
TOP CHORD 2x4 SP No.2
BOT CHORD 2x4 SP No.2
OTHERS 2x4 SP No.3

BRACING-
TOP CHORD Structural wood sheathing directly applied or 6-0-0 oc purlins.
BOT CHORD Rigid ceiling directly applied or 10-0-0 oc bracing.

REACTIONS. (lb/size) 1=137/7-3-0, 3=137/7-3-0, 4=234/7-3-0
Max Horz 1=52(LC 11)
Max Uplift 1=-30(LC 12), 3=-37(LC 13)

FORCES. (lb) - Max. Comp./Max. Ten. - All forces 250 (lb) or less except when shown.

NOTES-
1) Unbalanced roof live loads have been considered for this design.
2) Wind: ASCE 7-10; Vult=130mph (3-second gust) Vasd=103mph; TCDL=6.0psf; BCDL=6.0psf; h=25ft; Cat. II; Exp B; Enclosed; MWFRS (envelope) gable end zone and C-C Exterior(2) zone;C-C for members and forces & MWFRS for reactions shown; Lumber DOL=1.60 plate grip DOL=1.60
3) Gable requires continuous bottom chord bearing.
4) This truss has been designed for a 10.0 psf bottom chord live load nonconcurrent with any other live loads.
5) * This truss has been designed for a live load of 20.0psf on the bottom chord in all areas where a rectangle 3-6-0 tall by 2-0-0 wide will fit between the bottom chord and any other members.
6) Provide mechanical connection (by others) of truss to bearing plate capable of withstanding 100 lb uplift at joint(s) 1, 3.

May 1,2019

WARNING - Verify design parameters and READ NOTES ON THIS AND INCLUDED MITEK REFERENCE PAGE MII-7473 rev. 10/03/2015 BEFORE USE.
Design valid for use only with MiTek® connectors. This design is based only upon parameters shown, and is for an individual building component, not a truss system. Before use, the building designer must verify the applicability of design parameters and properly incorporate this design into the overall building design. Bracing indicated is to prevent buckling of individual truss web and/or chord members only. Additional temporary and permanent bracing is always required for stability and to prevent collapse with possible personal injury and property damage. For general guidance regarding the fabrication, storage, delivery, erection and bracing of trusses and truss systems, see **ANSI/TPI1 Quality Criteria, DSB-89 and BCSI Building Component Safety Information** available from Truss Plate Institute, 218 N. Lee Street, Suite 312, Alexandria, VA 22314.

ENGINEERING BY TRENCO A MiTek Affiliate
818 Soundside Road
Edenton, NC 27932

Job	Truss	Truss Type	Qty	Ply	149.2115 C CVP
20595A	VA4	Valley	1	1	I36927229 Job Reference (optional)

84 Components (Dunn), Dunn, NC - 28334, 8.220 s Nov 16 2018 MiTek Industries, Inc. Tue Apr 30 16:12:24 2019 Page 1
ID:bNZHYySm82JAWDNgfw9uCLzLbIt-rJ7ozIzkDhNncKG2ydEfyeHg4ykfbvFJDJoT0gzLTv5

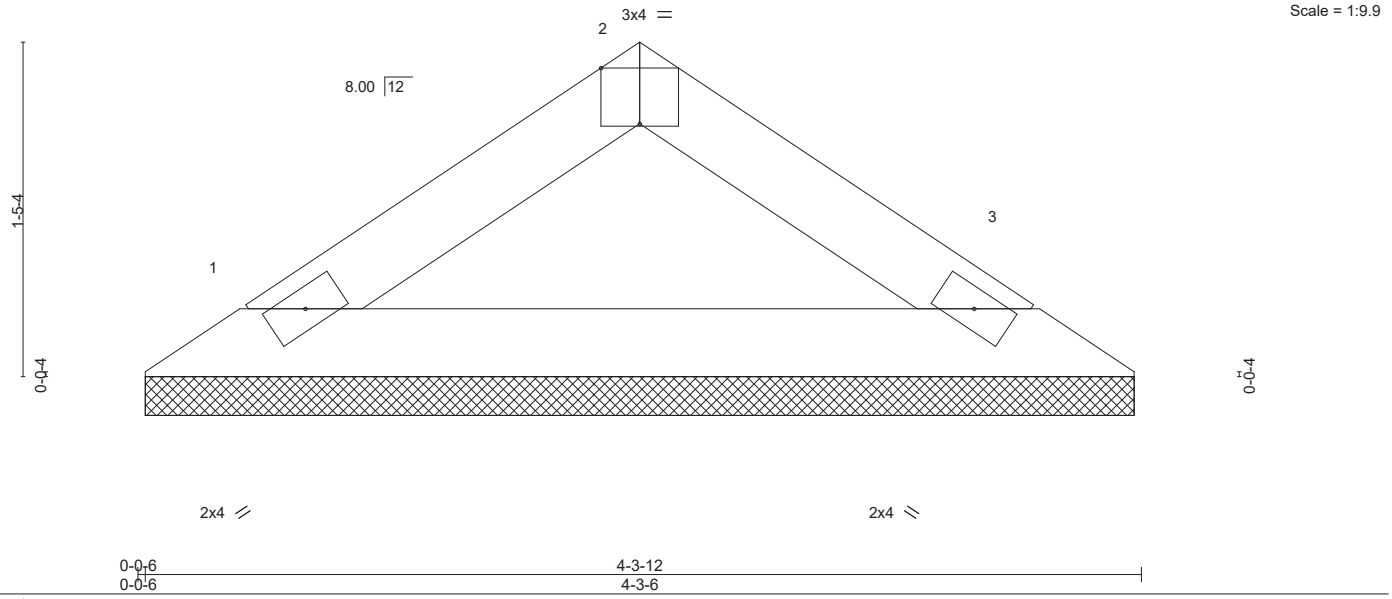

Plate Offsets (X,Y)-- [2:0-2-0,Edge]

LOADING (psf)		SPACING- 2-0-0		CSI.		DEFL. in (loc) l/defl L/d		PLATES	GRIP
TCLL	20.0	Plate Grip DOL	1.15	TC	0.05	Vert(LL) n/a - n/a 999		MT20	244/190
TCDL	10.0	Lumber DOL	1.15	BC	0.14	Vert(CT) n/a - n/a 999			
BCLL	0.0 *	Rep Stress Incr	YES	WB	0.00	Horz(CT) 0.00 3 n/a n/a			
BCDL	10.0	Code IRC2015/TPI2014		Matrix-P				Weight: 12 lb	FT = 20%

LUMBER-
TOP CHORD 2x4 SP No.2
BOT CHORD 2x4 SP No.2

BRACING-
TOP CHORD Structural wood sheathing directly applied or 4-3-12 oc purlins.
BOT CHORD Rigid ceiling directly applied or 10-0-0 oc bracing.

REACTIONS. (lb/size) 1=134/4-3-0, 3=134/4-3-0
Max Horz 1=28(LC 9)
Max Uplift 1=-14(LC 12), 3=-14(LC 13)

FORCES. (lb) - Max. Comp./Max. Ten. - All forces 250 (lb) or less except when shown.

NOTES-
1) Unbalanced roof live loads have been considered for this design.
2) Wind: ASCE 7-10; Vult=130mph (3-second gust) Vasd=103mph; TCDL=6.0psf; BCDL=6.0psf; h=25ft; Cat. II; Exp B; Enclosed; MWFRS (envelope) gable end zone and C-C Exterior(2) zone;C-C for members and forces & MWFRS for reactions shown; Lumber DOL=1.60 plate grip DOL=1.60
3) Gable requires continuous bottom chord bearing.
4) This truss has been designed for a 10.0 psf bottom chord live load nonconcurrent with any other live loads.
5) * This truss has been designed for a live load of 20.0psf on the bottom chord in all areas where a rectangle 3-6-0 tall by 2-0-0 wide will fit between the bottom chord and any other members.
6) Provide mechanical connection (by others) of truss to bearing plate capable of withstanding 100 lb uplift at joint(s) 1, 3.

May 1,2019

WARNING - Verify design parameters and READ NOTES ON THIS AND INCLUDED MITEK REFERENCE PAGE MII-7473 rev. 10/03/2015 BEFORE USE.
Design valid for use only with MiTek® connectors. This design is based only upon parameters shown, and is for an individual building component, not a truss system. Before use, the building designer must verify the applicability of design parameters and properly incorporate this design into the overall building design. Bracing indicated is to prevent buckling of individual truss web and/or chord members only. Additional temporary and permanent bracing is always required for stability and to prevent collapse with possible personal injury and property damage. For general guidance regarding the fabrication, storage, delivery, erection and bracing of trusses and truss systems, see **ANSI/TPI1 Quality Criteria, DSB-89 and BCSI Building Component Safety Information** available from Truss Plate Institute, 218 N. Lee Street, Suite 312, Alexandria, VA 22314.

ENGINEERING BY TRENCO A MiTek Affiliate
818 Soundside Road
Edenton, NC 27932

Job	Truss	Truss Type	Qty	Ply	149.2115 C CVP
20595A	VB1	GABLE	1	1	I36927230 Job Reference (optional)

84 Components (Dunn), Dunn, NC - 28334, 8.220 s Nov 16 2018 MiTek Industries, Inc. Tue Apr 30 16:12:25 2019 Page 1
ID:bNZHYySm82JAWDNgfw9uCLzLbIt-JVhAB5_N_?VeETrEWLIuUsqrbL5QKLZSRzX0Y6zLTv4

Scale = 1:43.6

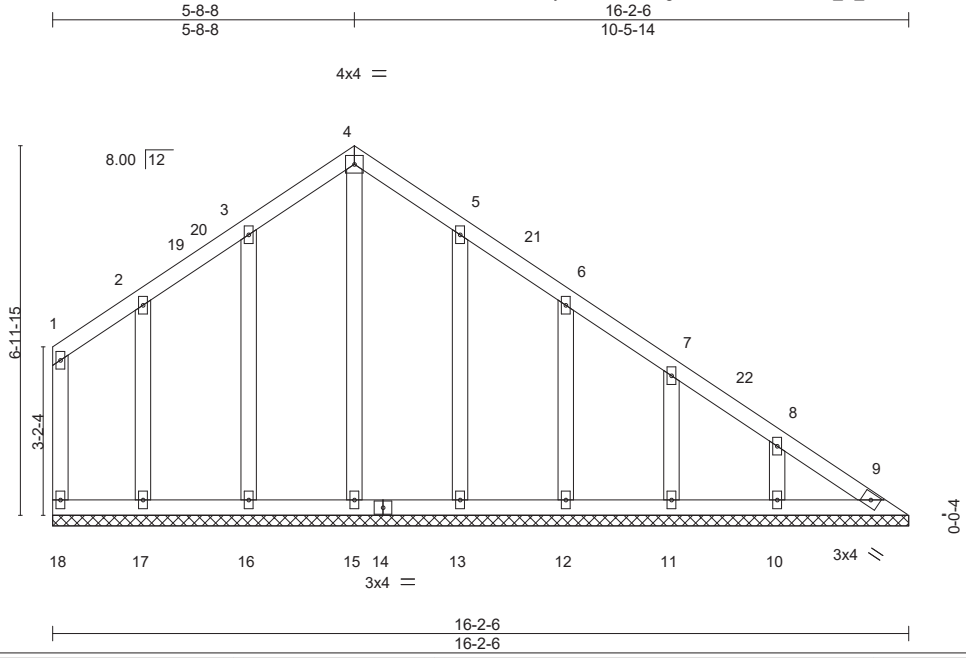

LOADING (psf)		SPACING- 2-0-0		CSI.		DEFL.	in	(loc)	l/defl	L/d	PLATES	GRIP
TCLL	20.0	Plate Grip DOL	1.15	TC	0.06	Vert(LL)	n/a	-	n/a	999	MT20	244/190
TCDL	10.0	Lumber DOL	1.15	BC	0.04	Vert(CT)	n/a	-	n/a	999		
BCLL	0.0 *	Rep Stress Incr	YES	WB	0.12	Horz(CT)	0.00	9	n/a	n/a		
BCDL	10.0	Code IRC2015/TPI2014		Matrix-S							Weight: 98 lb	FT = 20%

LUMBER-
TOP CHORD 2x4 SP No.2
BOT CHORD 2x4 SP No.2
WEBS 2x4 SP No.3
OTHERS 2x4 SP No.3

BRACING-
TOP CHORD Structural wood sheathing directly applied or 6-0-0 oc purlins, except end verticals.
BOT CHORD Rigid ceiling directly applied or 10-0-0 oc bracing.

REACTIONS. All bearings 16-2-6.
(lb) - Max Horz 18=-176(LC 13)
Max Uplift All uplift 100 lb or less at joint(s) 18, 9, 16, 17, 13, 12, 11, 10
Max Grav All reactions 250 lb or less at joint(s) 18, 9, 15, 16, 17, 13, 12, 11, 10

FORCES. (lb) - Max. Comp./Max. Ten. - All forces 250 (lb) or less except when shown.

NOTES-
1) Unbalanced roof live loads have been considered for this design.
2) Wind: ASCE 7-10; Vult=130mph (3-second gust) Vasd=103mph; TCDL=6.0psf; BCDL=6.0psf; h=25ft; Cat. II; Exp B; Enclosed; MWFRS (envelope) gable end zone and C-C Exterior(2) 0-1-12 to 3-1-12, Interior(1) 3-1-12 to 5-8-8, Exterior(2) 5-8-8 to 8-8-8, Interior(1) 8-8-8 to 15-8-10 zone;C-C for members and forces & MWFRS for reactions shown; Lumber DOL=1.60 plate grip DOL=1.60
3) All plates are 2x4 MT20 unless otherwise indicated.
4) Gable requires continuous bottom chord bearing.
5) This truss has been designed for a 10.0 psf bottom chord live load nonconcurrent with any other live loads.
6) * This truss has been designed for a live load of 20.0psf on the bottom chord in all areas where a rectangle 3-6-0 tall by 2-0-0 wide will fit between the bottom chord and any other members.
7) Provide mechanical connection (by others) of truss to bearing plate capable of withstanding 100 lb uplift at joint(s) 18, 9, 16, 17, 13, 12, 11, 10.

NORTH CAROLINA PROFESSIONAL SEAL 45844 ENGINEER ANDREW JOHNSON
May 1,2019

WARNING - Verify design parameters and READ NOTES ON THIS AND INCLUDED MITEK REFERENCE PAGE MII-7473 rev. 10/03/2015 BEFORE USE.
Design valid for use only with MiTek® connectors. This design is based only upon parameters shown, and is for an individual building component, not a truss system. Before use, the building designer must verify the applicability of design parameters and properly incorporate this design into the overall building design. Bracing indicated is to prevent buckling of individual truss web and/or chord members only. Additional temporary and permanent bracing is always required for stability and to prevent collapse with possible personal injury and property damage. For general guidance regarding the fabrication, storage, delivery, erection and bracing of trusses and truss systems, see **ANSI/TPI1 Quality Criteria, DSB-89 and BCSI Building Component Safety Information** available from Truss Plate Institute, 218 N. Lee Street, Suite 312, Alexandria, VA 22314.

ENGINEERING BY TRENCO A MiTek Affiliate
818 Soundside Road
Edenton, NC 27932

Job	Truss	Truss Type	Qty	Ply	149.2115 C CVP
20595A	VB2	GABLE	1	1	I36927231 Job Reference (optional)

84 Components (Dunn), Dunn, NC - 28334, 8.220 s Nov 16 2018 MiTek Industries, Inc. Tue Apr 30 16:12:25 2019 Page 1
ID:bNZHYySm82JAWDNgfw9uCLzLbIt-JVhAB5_N_?VeETrEWLluUsqnCL3UKKRSRzX0Y6zLTv4

5-7-0 | 14-6-14
5-7-0 | 8-11-14

Scale = 1:38.0

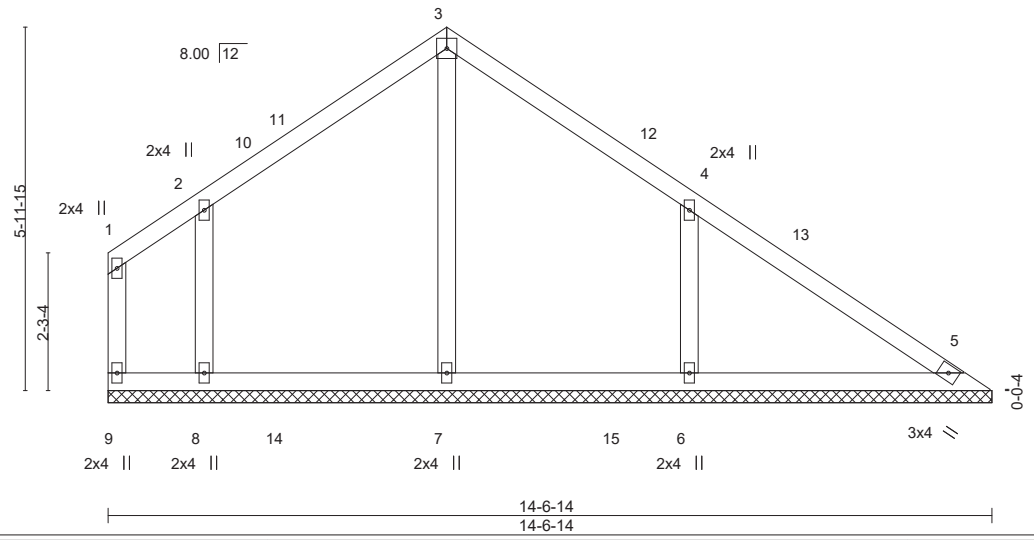

LOADING (psf)		SPACING- 2-0-0		CSI.		DEFL.	in	(loc)	l/defl	L/d	PLATES	GRIP
TCLL	20.0	Plate Grip DOL	1.15	TC	0.28	Vert(LL)	n/a	-	n/a	999	MT20	244/190
TCDL	10.0	Lumber DOL	1.15	BC	0.16	Vert(CT)	n/a	-	n/a	999		
BCLL	0.0 *	Rep Stress Incr	YES	WB	0.13	Horz(CT)	0.00	5	n/a	n/a		
BCDL	10.0	Code IRC2015/TPI2014		Matrix-S							Weight: 66 lb	FT = 20%

LUMBER-
TOP CHORD 2x4 SP No.2
BOT CHORD 2x4 SP No.2
WEBS 2x4 SP No.3
OTHERS 2x4 SP No.3

BRACING-
TOP CHORD Structural wood sheathing directly applied or 6-0-0 oc purlins, except end verticals.
BOT CHORD Rigid ceiling directly applied or 6-0-0 oc bracing.

REACTIONS. All bearings 14-6-14.
(lb) - Max Horz 9=-140(LC 13)
Max Uplift All uplift 100 lb or less at joint(s) 9, 5 except 8=-135(LC 12), 6=-168(LC 13)
Max Grav All reactions 250 lb or less at joint(s) 9, 5 except 7=410(LC 20), 8=362(LC 19), 6=457(LC 20)

FORCES. (lb) - Max. Comp./Max. Ten. - All forces 250 (lb) or less except when shown.
WEBS 2-8=-254/172, 4-6=-326/216

NOTES-
1) Unbalanced roof live loads have been considered for this design.
2) Wind: ASCE 7-10; Vult=130mph (3-second gust) Vasd=103mph; TCDL=6.0psf; BCDL=6.0psf; h=25ft; Cat. II; Exp B; Enclosed; MWFRS (envelope) gable end zone and C-C Exterior(2) 0-1-12 to 3-1-12, Interior(1) 3-1-12 to 5-7-0, Exterior(2) 5-7-0 to 8-7-0, Interior(1) 8-7-0 to 14-1-2 zone;C-C for members and forces & MWFRS for reactions shown; Lumber DOL=1.60 plate grip DOL=1.60
3) Gable requires continuous bottom chord bearing.
4) This truss has been designed for a 10.0 psf bottom chord live load nonconcurrent with any other live loads.
5) * This truss has been designed for a live load of 20.0psf on the bottom chord in all areas where a rectangle 3-6-0 tall by 2-0-0 wide will fit between the bottom chord and any other members, with BCDL = 10.0psf.
6) Provide mechanical connection (by others) of truss to bearing plate capable of withstanding 100 lb uplift at joint(s) 9, 5 except (jt=lb) 8=135, 6=168.

May 1,2019

WARNING - Verify design parameters and READ NOTES ON THIS AND INCLUDED MITEK REFERENCE PAGE MII-7473 rev. 10/03/2015 BEFORE USE.
Design valid for use only with MiTek® connectors. This design is based only upon parameters shown, and is for an individual building component, not a truss system. Before use, the building designer must verify the applicability of design parameters and properly incorporate this design into the overall building design. Bracing indicated is to prevent buckling of individual truss web and/or chord members only. Additional temporary and permanent bracing is always required for stability and to prevent collapse with possible personal injury and property damage. For general guidance regarding the fabrication, storage, delivery, erection and bracing of trusses and truss systems, see **ANSI/TPI1 Quality Criteria, DSB-89 and BCSI Building Component Safety Information** available from Truss Plate Institute, 218 N. Lee Street, Suite 312, Alexandria, VA 22314.

ENGINEERING BY TRENCO A MiTek Affiliate
818 Soundside Road
Edenton, NC 27932

Job	Truss	Truss Type	Qty	Ply	149.2115 C CVP
20595A	VB3	GABLE	1	1	I36927232 Job Reference (optional)

84 Components (Dunn), Dunn, NC - 28334, 8.220 s Nov 16 2018 MiTek Industries, Inc. Tue Apr 30 16:12:26 2019 Page 1
ID:bNZHYySm82JAWDNgfw9uCLzLbIt-niFYOR??lJeVsdPR42G713MzGlQR3oEcgdHZ4YzLTv3

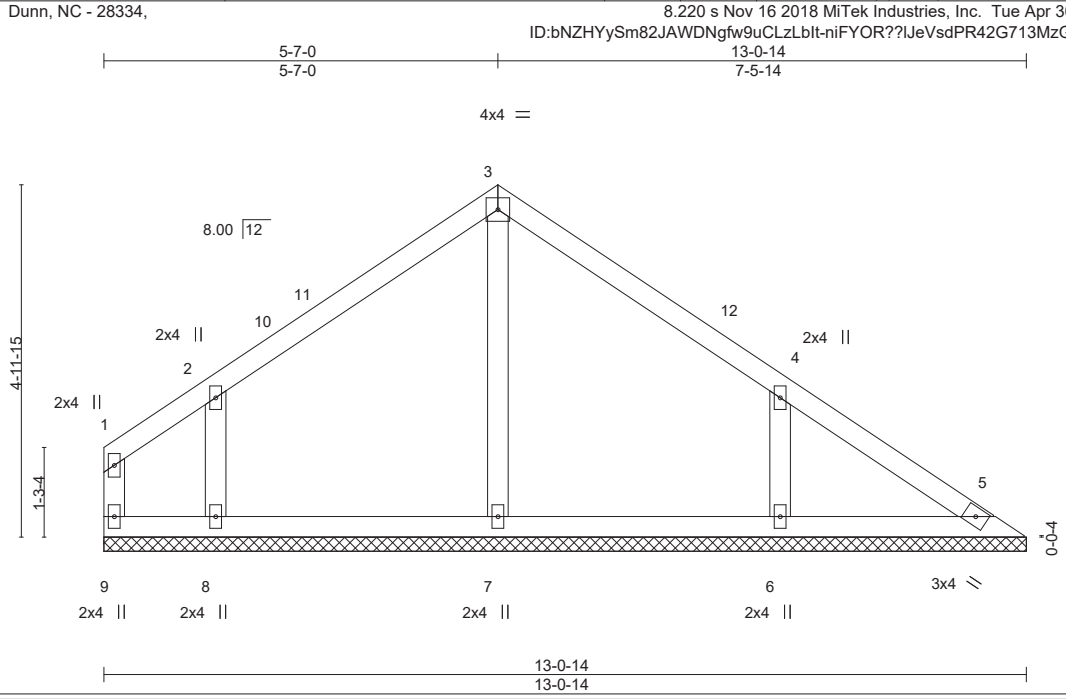

LOADING (psf)		SPACING- 2-0-0		CSI.		DEFL. in (loc) l/defl L/d		PLATES GRIP
TCLL	20.0	Plate Grip DOL	1.15	TC	0.19	Vert(LL) n/a - n/a 999		MT20 244/190
TCDL	10.0	Lumber DOL	1.15	BC	0.12	Vert(CT) n/a - n/a 999		
BCLL	0.0 *	Rep Stress Incr	YES	WB	0.10	Horz(CT) 0.00 5 n/a n/a		
BCDL	10.0	Code IRC2015/TPI2014		Matrix-S				Weight: 55 lb FT = 20%

LUMBER-
TOP CHORD 2x4 SP No.2
BOT CHORD 2x4 SP No.2
WEBS 2x4 SP No.3
OTHERS 2x4 SP No.3

BRACING-
TOP CHORD Structural wood sheathing directly applied or 6-0-0 oc purlins, except end verticals.
BOT CHORD Rigid ceiling directly applied or 6-0-0 oc bracing.

REACTIONS. All bearings 13-0-14.
(lb) - Max Horz 9=-113(LC 8)
Max Uplift All uplift 100 lb or less at joint(s) 9, 5 except 8=-145(LC 12), 6=-138(LC 13)
Max Grav All reactions 250 lb or less at joint(s) 9, 5 except 7=300(LC 1), 8=324(LC 19), 6=350(LC 20)

FORCES. (lb) - Max. Comp./Max. Ten. - All forces 250 (lb) or less except when shown.
WEBS 2-8=-254/177, 4-6=-270/181

NOTES-
1) Unbalanced roof live loads have been considered for this design.
2) Wind: ASCE 7-10; Vult=130mph (3-second gust) Vasd=103mph; TCDL=6.0psf; BCDL=6.0psf; h=25ft; Cat. II; Exp B; Enclosed; MWFRS (envelope) gable end zone and C-C Exterior(2) 0-1-12 to 3-1-12, Interior(1) 3-1-12 to 5-7-0, Exterior(2) 5-7-0 to 8-7-0, Interior(1) 8-7-0 to 12-7-2 zone;C-C for members and forces & MWFRS for reactions shown; Lumber DOL=1.60 plate grip DOL=1.60
3) Gable requires continuous bottom chord bearing.
4) This truss has been designed for a 10.0 psf bottom chord live load nonconcurrent with any other live loads.
5) * This truss has been designed for a live load of 20.0psf on the bottom chord in all areas where a rectangle 3-6-0 tall by 2-0-0 wide will fit between the bottom chord and any other members.
6) Provide mechanical connection (by others) of truss to bearing plate capable of withstanding 100 lb uplift at joint(s) 9, 5 except (jt=lb) 8=145, 6=138.

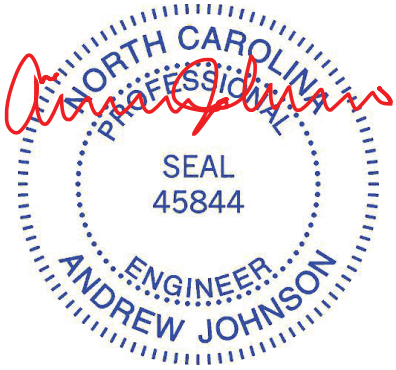

May 1,2019

WARNING - Verify design parameters and READ NOTES ON THIS AND INCLUDED MITEK REFERENCE PAGE MII-7473 rev. 10/03/2015 BEFORE USE.
Design valid for use only with MiTek® connectors. This design is based only upon parameters shown, and is for an individual building component, not a truss system. Before use, the building designer must verify the applicability of design parameters and properly incorporate this design into the overall building design. Bracing indicated is to prevent buckling of individual truss web and/or chord members only. Additional temporary and permanent bracing is always required for stability and to prevent collapse with possible personal injury and property damage. For general guidance regarding the fabrication, storage, delivery, erection and bracing of trusses and truss systems, see **ANSI/TPI1 Quality Criteria, DSB-89 and BCSI Building Component Safety Information** available from Truss Plate Institute, 218 N. Lee Street, Suite 312, Alexandria, VA 22314.

ENGINEERING BY TRENCO A MiTek Affiliate
818 Soundside Road
Edenton, NC 27932

Job	Truss	Truss Type	Qty	Ply	149.2115 C CVP
20595A	VB4	GABLE	1	1	I36927233 Job Reference (optional)

84 Components (Dunn), Dunn, NC - 28334, 8.220 s Nov 16 2018 MiTek Industries, Inc. Tue Apr 30 16:12:27 2019 Page 1
ID:bNZHYySm82JAWDNgfw9uCLzLbIt-Fupwcn0dWcmMTn_ddlnMaHv9B9mZoG7lvH07d?zLTv2

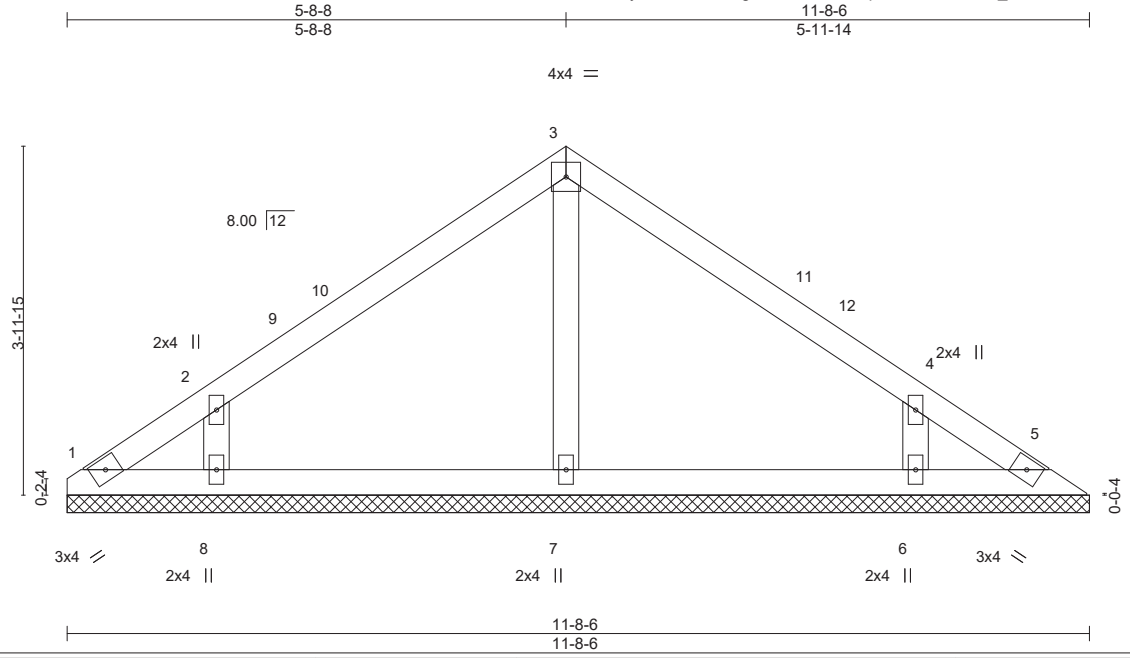

LOADING (psf)		SPACING- 2-0-0		CSI.		DEFL. in (loc) l/defl L/d		PLATES GRIP
TCLL	20.0	Plate Grip DOL	1.15	TC	0.18	Vert(LL) n/a - n/a 999		MT20 244/190
TCDL	10.0	Lumber DOL	1.15	BC	0.12	Vert(CT) n/a - n/a 999		
BCLL	0.0 *	Rep Stress Incr	YES	WB	0.06	Horz(CT) 0.00 5 n/a n/a		
BCDL	10.0	Code IRC2015/TPI2014		Matrix-S				Weight: 44 lb FT = 20%

LUMBER-
TOP CHORD 2x4 SP No.2
BOT CHORD 2x4 SP No.2
OTHERS 2x4 SP No.3

BRACING-
TOP CHORD Structural wood sheathing directly applied or 6-0-0 oc purlins.
BOT CHORD Rigid ceiling directly applied or 10-0-0 oc bracing.

REACTIONS. All bearings 11-8-6.
(lb) - Max Horz 1=91(LC 9)
Max Uplift All uplift 100 lb or less at joint(s) 1, 5 except 8=-127(LC 12), 6=-127(LC 13)
Max Grav All reactions 250 lb or less at joint(s) 1, 5 except 7=266(LC 1), 8=312(LC 19), 6=311(LC 20)

FORCES. (lb) - Max. Comp./Max. Ten. - All forces 250 (lb) or less except when shown.
WEBS 2-8=-251/171, 4-6=-251/171

NOTES-
1) Unbalanced roof live loads have been considered for this design.
2) Wind: ASCE 7-10; Vult=130mph (3-second gust) Vasd=103mph; TCDL=6.0psf; BCDL=6.0psf; h=25ft; Cat. II; Exp B; Enclosed; MWFRS (envelope) gable end zone and C-C Exterior(2) 0-2-6 to 3-2-6, Interior(1) 3-2-6 to 5-8-8, Exterior(2) 5-8-8 to 8-8-8, Interior(1) 8-8-8 to 11-2-10 zone;C-C for members and forces & MWFRS for reactions shown; Lumber DOL=1.60 plate grip DOL=1.60
3) Gable requires continuous bottom chord bearing.
4) This truss has been designed for a 10.0 psf bottom chord live load nonconcurrent with any other live loads.
5) * This truss has been designed for a live load of 20.0psf on the bottom chord in all areas where a rectangle 3-6-0 tall by 2-0-0 wide will fit between the bottom chord and any other members.
6) Provide mechanical connection (by others) of truss to bearing plate capable of withstanding 100 lb uplift at joint(s) 1, 5 except (jt=lb) 8=127, 6=127.

May 1,2019

WARNING - Verify design parameters and READ NOTES ON THIS AND INCLUDED MITEK REFERENCE PAGE MII-7473 rev. 10/03/2015 BEFORE USE.
Design valid for use only with MiTek® connectors. This design is based only upon parameters shown, and is for an individual building component, not a truss system. Before use, the building designer must verify the applicability of design parameters and properly incorporate this design into the overall building design. Bracing indicated is to prevent buckling of individual truss web and/or chord members only. Additional temporary and permanent bracing is always required for stability and to prevent collapse with possible personal injury and property damage. For general guidance regarding the fabrication, storage, delivery, erection and bracing of trusses and truss systems, see **ANSI/TPI1 Quality Criteria, DSB-89 and BCSI Building Component Safety Information** available from Truss Plate Institute, 218 N. Lee Street, Suite 312, Alexandria, VA 22314.

ENGINEERING BY TRENCO A MiTek Affiliate
818 Soundside Road
Edenton, NC 27932

Job	Truss	Truss Type	Qty	Ply	149.2115 C CVP
20595A	VB5	GABLE	1	1	I36927234 Job Reference (optional)

84 Components (Dunn), Dunn, NC - 28334, 8.220 s Nov 16 2018 MiTek Industries, Inc. Tue Apr 30 16:12:28 2019 Page 1
ID:bNZHYySm82JAWDNgfw9uCLzLbIt-k4NIp70FGwuD5xZpBTJb6URIyZ5AXjXu7xmg9RzLTv1

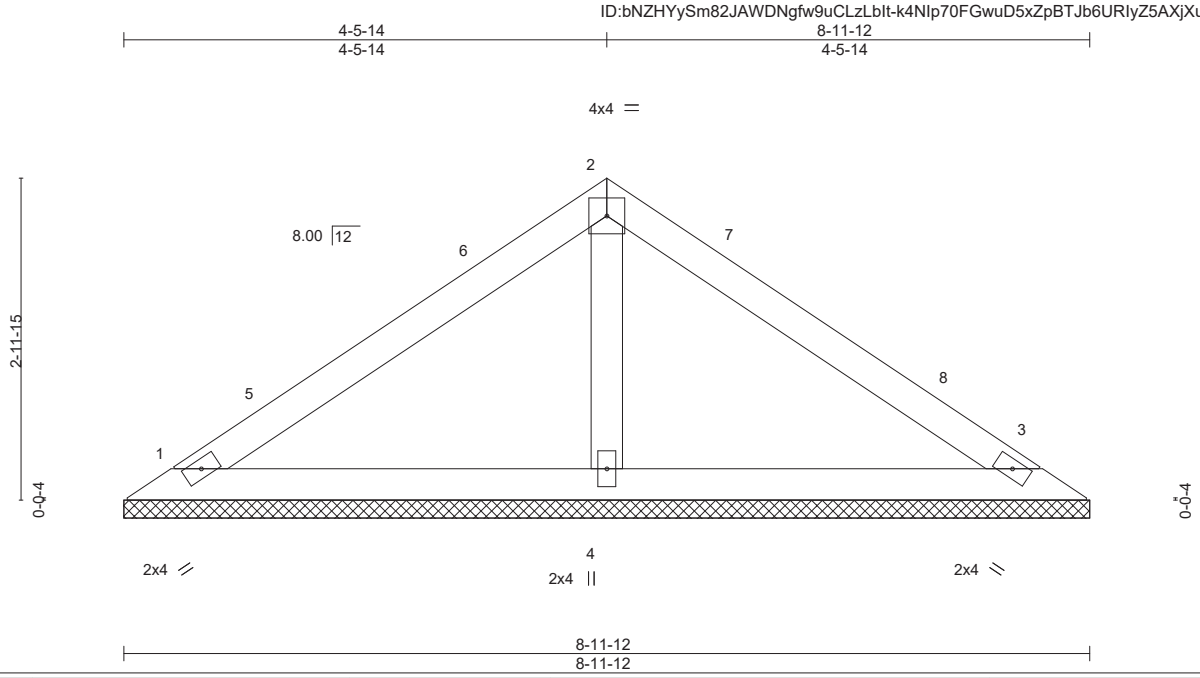

LOADING (psf)		SPACING- 2-0-0		CSI.		DEFL. in (loc) l/defl L/d		PLATES GRIP
TCLL	20.0	Plate Grip DOL	1.15	TC	0.31	Vert(LL) n/a - n/a 999		MT20 244/190
TCDL	10.0	Lumber DOL	1.15	BC	0.16	Vert(CT) n/a - n/a 999		
BCLL	0.0 *	Rep Stress Incr	YES	WB	0.05	Horz(CT) 0.00 3 n/a n/a		
BCDL	10.0	Code IRC2015/TPI2014		Matrix-P				Weight: 31 lb FT = 20%

LUMBER-
TOP CHORD 2x4 SP No.2
BOT CHORD 2x4 SP No.2
OTHERS 2x4 SP No.3

BRACING-
TOP CHORD Structural wood sheathing directly applied or 6-0-0 oc purlins.
BOT CHORD Rigid ceiling directly applied or 10-0-0 oc bracing.

REACTIONS. (lb/size) 1=173/8-11-12, 3=173/8-11-12, 4=295/8-11-12
Max Horz 1=-66(LC 8)
Max Uplift 1=-38(LC 12), 3=-47(LC 13)

FORCES. (lb) - Max. Comp./Max. Ten. - All forces 250 (lb) or less except when shown.

NOTES-
1) Unbalanced roof live loads have been considered for this design.
2) Wind: ASCE 7-10; Vult=130mph (3-second gust) Vasd=103mph; TCDL=6.0psf; BCDL=6.0psf; h=25ft; Cat. II; Exp B; Enclosed; MWFRS (envelope) gable end zone and C-C Exterior(2) 0-5-12 to 3-5-12, Interior(1) 3-5-12 to 4-5-14, Exterior(2) 4-5-14 to 7-5-14, Interior(1) 7-5-14 to 8-6-0 zone;C-C for members and forces & MWFRS for reactions shown; Lumber DOL=1.60 plate grip DOL=1.60
3) Gable requires continuous bottom chord bearing.
4) This truss has been designed for a 10.0 psf bottom chord live load nonconcurrent with any other live loads.
5) * This truss has been designed for a live load of 20.0psf on the bottom chord in all areas where a rectangle 3-6-0 tall by 2-0-0 wide will fit between the bottom chord and any other members.
6) Provide mechanical connection (by others) of truss to bearing plate capable of withstanding 100 lb uplift at joint(s) 1, 3.

May 1,2019

WARNING - Verify design parameters and READ NOTES ON THIS AND INCLUDED MITEK REFERENCE PAGE MII-7473 rev. 10/03/2015 BEFORE USE.
Design valid for use only with MiTek® connectors. This design is based only upon parameters shown, and is for an individual building component, not a truss system. Before use, the building designer must verify the applicability of design parameters and properly incorporate this design into the overall building design. Bracing indicated is to prevent buckling of individual truss web and/or chord members only. Additional temporary and permanent bracing is always required for stability and to prevent collapse with possible personal injury and property damage. For general guidance regarding the fabrication, storage, delivery, erection and bracing of trusses and truss systems, see **ANSI/TPI1 Quality Criteria, DSB-89 and BCSI Building Component Safety Information** available from Truss Plate Institute, 218 N. Lee Street, Suite 312, Alexandria, VA 22314.

ENGINEERING BY TRENCO A MiTek Affiliate
818 Soundside Road
Edenton, NC 27932

Job	Truss	Truss Type	Qty	Ply	149.2115 C CVP
20595A	VB6	Valley	1	1	I36927235 Job Reference (optional)

84 Components (Dunn), Dunn, NC - 28334, 8.220 s Nov 16 2018 MiTek Industries, Inc. Tue Apr 30 16:12:28 2019 Page 1
ID:bNZHYySm82JAWDNgfw9uCLzLbIt-k4NIp70FGwuD5xZpBTJb6URL2Z2hXjEu7xmg9RzLTv1

2-11-14 | 5-11-12
2-11-14 | 2-11-14

Scale = 1:15.7

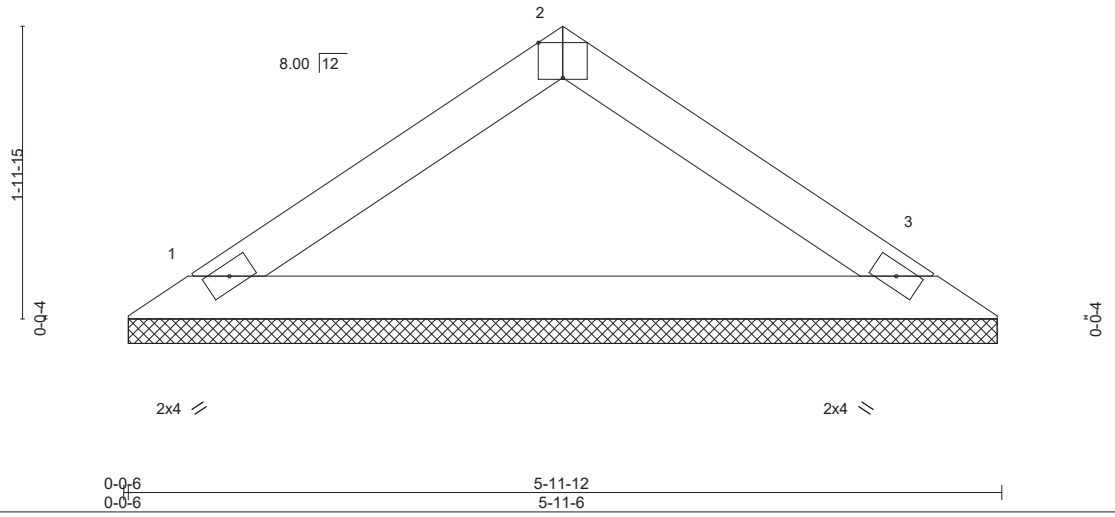

Plate Offsets (X,Y)-- [2:0-2-0,Edge]

LOADING (psf)		SPACING-	2-0-0	CSI.		DEFL.	in	(loc)	l/defl	L/d	PLATES	GRIP
TCLL	20.0	Plate Grip DOL	1.15	TC	0.11	Vert(LL)	n/a	-	n/a	999	MT20	244/190
TCDL	10.0	Lumber DOL	1.15	BC	0.32	Vert(CT)	n/a	-	n/a	999		
BCLL	0.0 *	Rep Stress Incr	YES	WB	0.00	Horz(CT)	0.00	3	n/a	n/a		
BCDL	10.0	Code IRC2015/TPI2014		Matrix-P							Weight: 18 lb	FT = 20%

LUMBER-
TOP CHORD 2x4 SP No.2
BOT CHORD 2x4 SP No.2

BRACING-
TOP CHORD Structural wood sheathing directly applied or 5-11-12 oc purlins.
BOT CHORD Rigid ceiling directly applied or 10-0-0 oc bracing.

REACTIONS. (lb/size) 1=201/5-11-0, 3=201/5-11-0
Max Horz 1=-41(LC 8)
Max Uplift 1=-22(LC 12), 3=-22(LC 13)

FORCES. (lb) - Max. Comp./Max. Ten. - All forces 250 (lb) or less except when shown.

NOTES-
1) Unbalanced roof live loads have been considered for this design.
2) Wind: ASCE 7-10; Vult=130mph (3-second gust) Vasd=103mph; TCDL=6.0psf; BCDL=6.0psf; h=25ft; Cat. II; Exp B; Enclosed; MWFRS (envelope) gable end zone and C-C Exterior(2) zone;C-C for members and forces & MWFRS for reactions shown; Lumber DOL=1.60 plate grip DOL=1.60
3) Gable requires continuous bottom chord bearing.
4) This truss has been designed for a 10.0 psf bottom chord live load nonconcurrent with any other live loads.
5) * This truss has been designed for a live load of 20.0psf on the bottom chord in all areas where a rectangle 3-6-0 tall by 2-0-0 wide will fit between the bottom chord and any other members.
6) Provide mechanical connection (by others) of truss to bearing plate capable of withstanding 100 lb uplift at joint(s) 1, 3.

May 1,2019

WARNING - Verify design parameters and READ NOTES ON THIS AND INCLUDED MITEK REFERENCE PAGE MII-7473 rev. 10/03/2015 BEFORE USE.
Design valid for use only with MiTek® connectors. This design is based only upon parameters shown, and is for an individual building component, not a truss system. Before use, the building designer must verify the applicability of design parameters and properly incorporate this design into the overall building design. Bracing indicated is to prevent buckling of individual truss web and/or chord members only. Additional temporary and permanent bracing is always required for stability and to prevent collapse with possible personal injury and property damage. For general guidance regarding the fabrication, storage, delivery, erection and bracing of trusses and truss systems, see **ANSI/TPI1 Quality Criteria, DSB-89 and BCSI Building Component Safety Information** available from Truss Plate Institute, 218 N. Lee Street, Suite 312, Alexandria, VA 22314.

ENGINEERING BY TRENCO A MiTek Affiliate
818 Soundside Road
Edenton, NC 27932

Job	Truss	Truss Type	Qty	Ply	149.2115 C CVP
20595A	VB7	Valley	1	1	I36927236 Job Reference (optional)

84 Components (Dunn), Dunn, NC - 28334, 8.220 s Nov 16 2018 MiTek Industries, Inc. Tue Apr 30 16:12:29 2019 Page 1
ID:bNZHYySm82JAWDNgfw9uCLzLbIt-CHwh1S1t1E04j580lAqqfi_XIzTDGAU2MbVEhtzLTv0

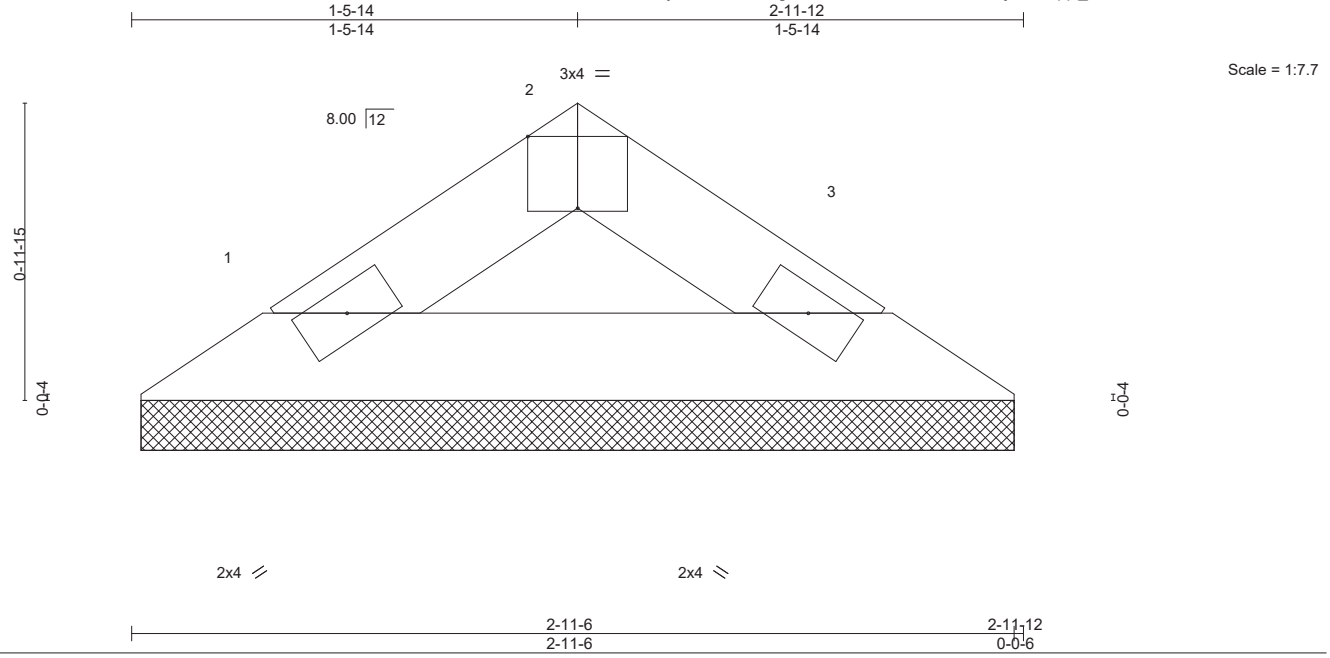

Plate Offsets (X,Y)-- [2:0-2-0,Edge]

LOADING (psf)		SPACING-	2-0-0	CSI.		DEFL.	in	(loc)	l/defl	L/d	PLATES	GRIP
TCLL	20.0	Plate Grip DOL	1.15	TC	0.02	Vert(LL)	n/a	-	n/a	999	MT20	244/190
TCDL	10.0	Lumber DOL	1.15	BC	0.05	Vert(CT)	n/a	-	n/a	999		
BCLL	0.0 *	Rep Stress Incr	YES	WB	0.00	Horz(CT)	0.00	3	n/a	n/a		
BCDL	10.0	Code IRC2015/TPI2014		Matrix-P							Weight: 8 lb	FT = 20%

LUMBER-
TOP CHORD 2x4 SP No.2
BOT CHORD 2x4 SP No.2

BRACING-
TOP CHORD Structural wood sheathing directly applied or 2-11-12 oc purlins.
BOT CHORD Rigid ceiling directly applied or 10-0-0 oc bracing.

REACTIONS. (lb/size) 1=81/2-11-0, 3=81/2-11-0
Max Horz 1=17(LC 9)
Max Uplift 1=-9(LC 12), 3=-9(LC 13)

FORCES. (lb) - Max. Comp./Max. Ten. - All forces 250 (lb) or less except when shown.

NOTES-
1) Unbalanced roof live loads have been considered for this design.
2) Wind: ASCE 7-10; Vult=130mph (3-second gust) Vasd=103mph; TCDL=6.0psf; BCDL=6.0psf; h=25ft; Cat. II; Exp B; Enclosed; MWFRS (envelope) gable end zone and C-C Exterior(2) zone;C-C for members and forces & MWFRS for reactions shown; Lumber DOL=1.60 plate grip DOL=1.60
3) Gable requires continuous bottom chord bearing.
4) This truss has been designed for a 10.0 psf bottom chord live load nonconcurrent with any other live loads.
5) * This truss has been designed for a live load of 20.0psf on the bottom chord in all areas where a rectangle 3-6-0 tall by 2-0-0 wide will fit between the bottom chord and any other members.
6) Provide mechanical connection (by others) of truss to bearing plate capable of withstanding 100 lb uplift at joint(s) 1, 3.

May 1,2019

WARNING - Verify design parameters and READ NOTES ON THIS AND INCLUDED MITEK REFERENCE PAGE MII-7473 rev. 10/03/2015 BEFORE USE.
Design valid for use only with MiTek® connectors. This design is based only upon parameters shown, and is for an individual building component, not a truss system. Before use, the building designer must verify the applicability of design parameters and properly incorporate this design into the overall building design. Bracing indicated is to prevent buckling of individual truss web and/or chord members only. Additional temporary and permanent bracing is always required for stability and to prevent collapse with possible personal injury and property damage. For general guidance regarding the fabrication, storage, delivery, erection and bracing of trusses and truss systems, see **ANSI/TPI1 Quality Criteria, DSB-89 and BCSI Building Component Safety Information** available from Truss Plate Institute, 218 N. Lee Street, Suite 312, Alexandria, VA 22314.

ENGINEERING BY TRENCO A MiTek Affiliate
818 Soundside Road
Edenton, NC 27932