ENGINEERING BY TRENCO
A MiTek Affiliate

RE: 23412A Porch Only
C.10x10cvp

Trenco
818 Soundside Rd
Edenton, NC 27932

Site Information:

Customer: Project Name: 23412A Porch Only
Lot/Block: Model:
Address: Subdivision:
City: State:

General Truss Engineering Criteria & Design Loads (Individual Truss Design Drawings Show Special Loading Conditions):

Design Code: IRC2015/TPI2014 Design Program: MiTek 20/20 8.3
Wind Code: ASCE 7-10 Wind Speed: 130 mph
Roof Load: 40.0 psf Floor Load: N/A psf

This package includes 2 individual, dated Truss Design Drawings and 0 Additional Drawings.

No.	Seal#	Truss Name	Date
1	I39995770	cp1	1/22/2020
2	I39995771	cpe	1/22/2020

The truss drawing(s) referenced above have been prepared by Truss Engineering Co. under my direct supervision based on the parameters provided by 84 Components - #2383.
Truss Design Engineer's Name: Liu, Xuegang
My license renewal date for the state of North Carolina is December 31, 2020.
North Carolina COA: C-0844

IMPORTANT NOTE: The seal on these truss component designs is a certification that the engineer named is licensed in the jurisdiction(s) identified and that the designs comply with ANSI/TPI 1. These designs are based upon parameters shown (e.g., loads, supports, dimensions, shapes and design codes), which were given to TRENCO. Any project specific information included is for TRENCO customers file reference purpose only, and was not taken into account in the preparation of these designs. TRENCO has not independently verified the applicability of the design parameters or the designs for any particular building. Before use, the building designer should verify applicability of design parameters and properly incorporate these designs into the overall building design per ANSI/TPI 1, Chapter 2.

NORTH CAROLINA PROFESSIONAL SEAL 28223 ENGINEER XUEGANG LIU

January 22, 2020
Liu, Xuegang

Job	Truss	Truss Type	Qty	Ply	C.10x10cvp
23412A Porch Only	CP1	COMMON	4	1	I39995770 Job Reference (optional)

84 Components (Dunn), Dunn, NC - 28334, 8.330 s Jan 8 2020 MiTek Industries, Inc. Wed Jan 22 15:25:36 2020 Page 1
ID:VMD62rz1yiHD_OqRtbnrlFztQ8K-21Y6Q8PNDpzJNX3Px9Yvg3?EHL85wXv9ksNLm8zsmAj

-0-10-8 | 5-0-0 | 10-0-0 | 10-10-8
0-10-8 | 5-0-0 | 5-0-0 | 0-10-8

Scale = 1:21.4

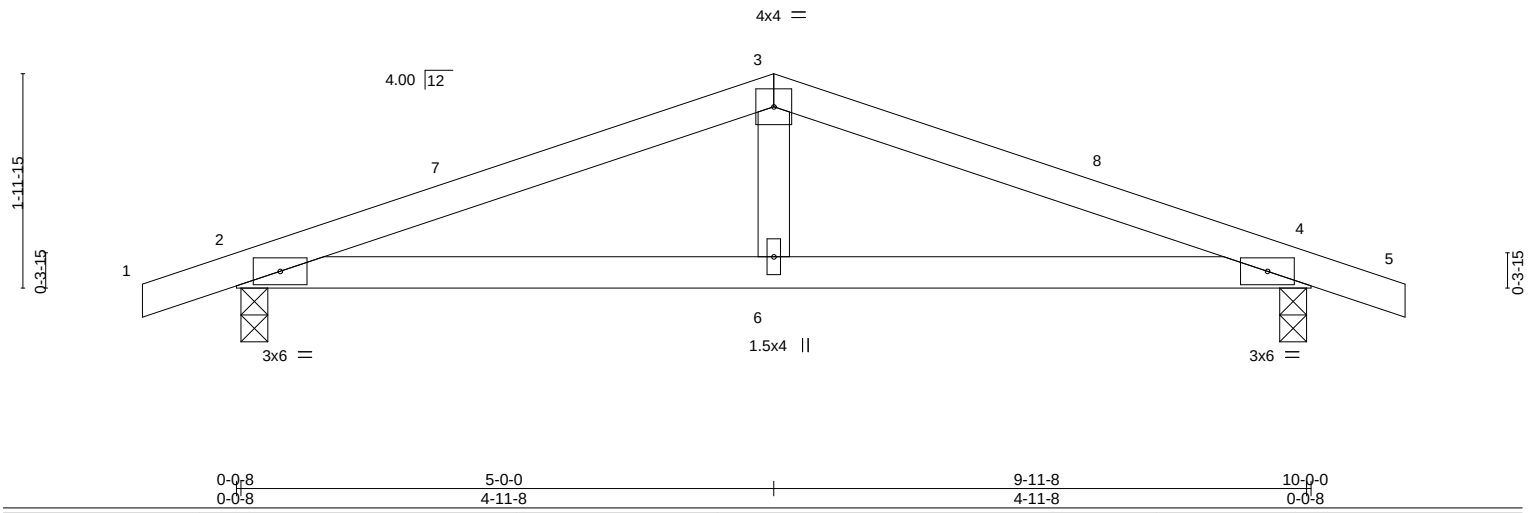

LOADING (psf)		SPACING- 2-0-0		CSI.		DEFL. in (loc) l/defl L/d		PLATES GRIP
TCLL	20.0	Plate Grip DOL	1.15	TC	0.38	Vert(LL) 0.05 4-6 >999 240		MT20 244/190
TCDL	10.0	Lumber DOL	1.15	BC	0.57	Vert(CT) -0.04 2-6 >999 180		
BCLL	0.0 *	Rep Stress Incr	YES	WB	0.09	Horz(CT) 0.01 4 n/a n/a		
BCDL	10.0	Code IRC2015/TPI2014		Matrix-S				Weight: 36 lb FT = 20%

LUMBER-
TOP CHORD 2x4 SP No.2
BOT CHORD 2x4 SP No.2
WEBS 2x4 SP No.3

BRACING-
TOP CHORD Structural wood sheathing directly applied or 6-0-0 oc purlins.
BOT CHORD Rigid ceiling directly applied or 7-9-10 oc bracing.

REACTIONS. (lb/size) 2=450/0-3-0, 4=450/0-3-0
Max Horz 2=-34(LC 17)
Max Uplift 2=-200(LC 8), 4=-200(LC 9)

FORCES. (lb) - Max. Comp./Max. Ten. - All forces 250 (lb) or less except when shown.
TOP CHORD 2-3=-705/633, 3-4=-705/630
BOT CHORD 2-6=-538/622, 4-6=-538/622

NOTES-
1) Unbalanced roof live loads have been considered for this design.
2) Wind: ASCE 7-10; Vult=130mph (3-second gust) Vasd=103mph; TCDL=6.0psf; BCDL=6.0psf; h=35ft; Cat. II; Exp B; Enclosed; MWFRS (envelope) gable end zone and C-C Exterior(2) -0-10-8 to 2-1-8, Interior(1) 2-1-8 to 5-0-0, Exterior(2) 5-0-0 to 8-0-0, Interior(1) 8-0-0 to 10-10-8 zone; porch left and right exposed;C-C for members and forces & MWFRS for reactions shown; Lumber DOL=1.60 plate grip DOL=1.60
3) This truss has been designed for a 10.0 psf bottom chord live load nonconcurrent with any other live loads.
4) * This truss has been designed for a live load of 20.0psf on the bottom chord in all areas where a rectangle 3-6-0 tall by 2-0-0 wide will fit between the bottom chord and any other members.
5) One H2.5A Simpson Strong-Tie connectors recommended to connect truss to bearing walls due to UPLIFT at jt(s) 2 and 4. This connection is for uplift only and does not consider lateral forces.

January 22,2020

WARNING - Verify design parameters and READ NOTES ON THIS AND INCLUDED MITEK REFERENCE PAGE MII-7473 rev. 10/03/2015 BEFORE USE.
Design valid for use only with MiTek® connectors. This design is based only upon parameters shown, and is for an individual building component, not a truss system. Before use, the building designer must verify the applicability of design parameters and properly incorporate this design into the overall building design. Bracing indicated is to prevent buckling of individual truss web and/or chord members only. Additional temporary and permanent bracing is always required for stability and to prevent collapse with possible personal injury and property damage. For general guidance regarding the fabrication, storage, delivery, erection and bracing of trusses and truss systems, see **ANSI/TPI1 Quality Criteria, DSB-89 and BCSI Building Component Safety Information** available from Truss Plate Institute, 218 N. Lee Street, Suite 312, Alexandria, VA 22314.

ENGINEERING BY TRENCO A MiTek Affiliate
818 Soundside Road
Edenton, NC 27932

Job	Truss	Truss Type	Qty	Ply	C.10x10cvp
23412A Porch Only	CPE	COMMON SUPPORTED GAB	1	1	I39995771 Job Reference (optional)

84 Components (Dunn), Dunn, NC - 28334, 8.330 s Jan 8 2020 MiTek Industries, Inc. Wed Jan 22 15:25:36 2020 Page 1

ID:VMD62rz1yiHD_OqRtbnrlFztQ8K-21Y6Q8PNDpzJNX3Px9Yvg3?IjLG0wYN9ksNLm8zsmAj

-0-10-8 | 5-0-0 | 10-0-0 | 10-10-8

0-10-8 | 5-0-0 | 5-0-0 | 0-10-8

Scale = 1:21.4

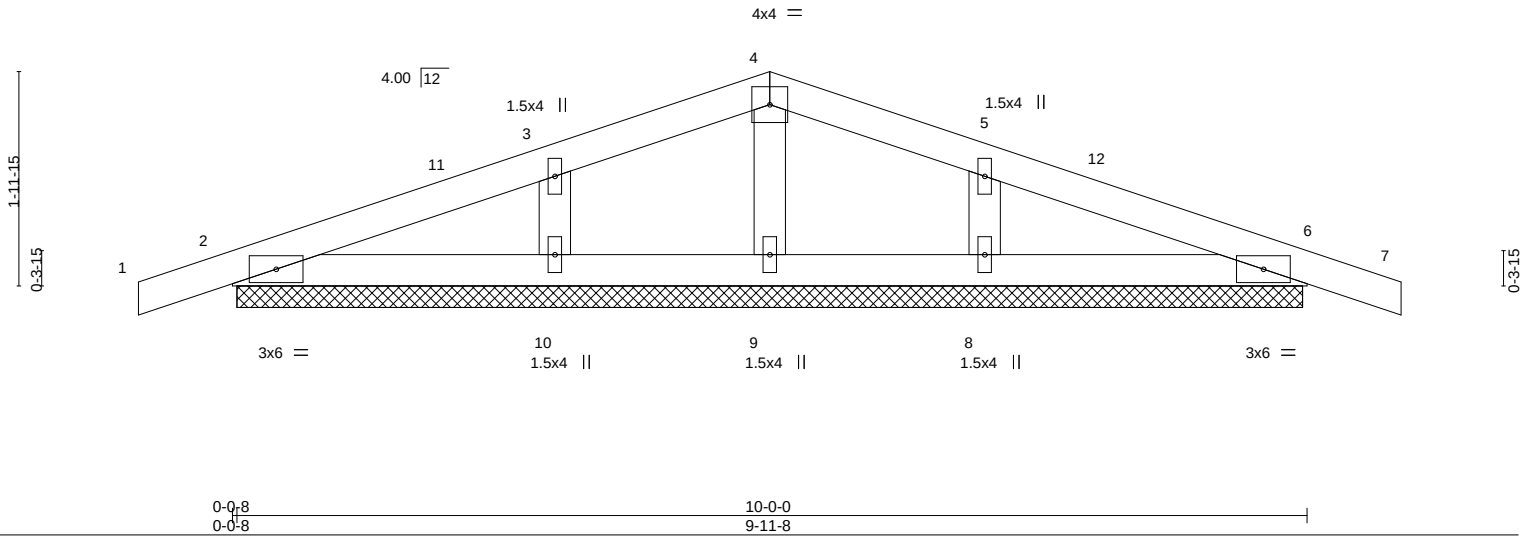

LOADING (psf)		SPACING- 2-0-0		CSI.		DEFL. in (loc) l/defl L/d		PLATES	GRIP
TCLL	20.0	Plate Grip DOL	1.15	TC	0.10	Vert(LL) 0.00 7 n/r 120		MT20	244/190
TCDL	10.0	Lumber DOL	1.15	BC	0.06	Vert(CT) 0.00 7 n/r 120			
BCLL	0.0 *	Rep Stress Incr	YES	WB	0.06	Horz(CT) 0.00 6 n/a n/a			
BCDL	10.0	Code IRC2015/TPI2014		Matrix-S				Weight: 38 lb	FT = 20%

LUMBER-

TOP CHORD 2x4 SP No.2
BOT CHORD 2x4 SP No.2
OTHERS 2x4 SP No.3

BRACING-

TOP CHORD Structural wood sheathing directly applied or 6-0-0 oc purlins.
BOT CHORD Rigid ceiling directly applied or 10-0-0 oc bracing.

REACTIONS. All bearings 9-11-0.
(lb) - Max Horz 2=-34(LC 13)
Max Uplift All uplift 100 lb or less at joint(s) 2, 6, 10, 8
Max Grav All reactions 250 lb or less at joint(s) 2, 6, 9, 10, 8

FORCES. (lb) - Max. Comp./Max. Ten. - All forces 250 (lb) or less except when shown.

NOTES-

1) Unbalanced roof live loads have been considered for this design.
2) Wind: ASCE 7-10; Vult=130mph (3-second gust) Vasd=103mph; TCDL=6.0psf; BCDL=6.0psf; h=35ft; Cat. II; Exp B; Enclosed; MWFRS (envelope) gable end zone and C-C Corner(3) -0-10-8 to 2-1-8, Exterior(2) 2-1-8 to 5-0-0, Corner(3) 5-0-0 to 8-0-0, Exterior(2) 8-0-0 to 10-10-8 zone; porch left and right exposed;C-C for members and forces & MWFRS for reactions shown; Lumber DOL=1.60 plate grip DOL=1.60
3) Truss designed for wind loads in the plane of the truss only. For studs exposed to wind (normal to the face), see Standard Industry Gable End Details as applicable, or consult qualified building designer as per ANSI/TPI 1.
4) Gable studs spaced at 2-0-0 oc.
5) This truss has been designed for a 10.0 psf bottom chord live load nonconcurrent with any other live loads.
6) * This truss has been designed for a live load of 20.0psf on the bottom chord in all areas where a rectangle 3-6-0 tall by 2-0-0 wide will fit between the bottom chord and any other members.
7) n/a

8) n/a

9) Non Standard bearing condition. Review required.

January 22,2020

WARNING - Verify design parameters and READ NOTES ON THIS AND INCLUDED MITEK REFERENCE PAGE MII-7473 rev. 10/03/2015 BEFORE USE.
Design valid for use only with MiTek® connectors. This design is based only upon parameters shown, and is for an individual building component, not a truss system. Before use, the building designer must verify the applicability of design parameters and properly incorporate this design into the overall building design. Bracing indicated is to prevent buckling of individual truss web and/or chord members only. Additional temporary and permanent bracing is always required for stability and to prevent collapse with possible personal injury and property damage. For general guidance regarding the fabrication, storage, delivery, erection and bracing of trusses and truss systems, see **ANSI/TPI1 Quality Criteria, DSB-89 and BCSI Building Component Safety Information** available from Truss Plate Institute, 218 N. Lee Street, Suite 312, Alexandria, VA 22314.

ENGINEERING BY TRENCO A MiTek Affiliate
818 Soundside Road
Edenton, NC 27932

Symbols

PLATE LOCATION AND ORIENTATION

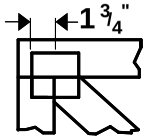

Center plate on joint unless x, y offsets are indicated. Dimensions are in ft-in-sixteenths. Apply plates to both sides of truss and fully embed teeth.

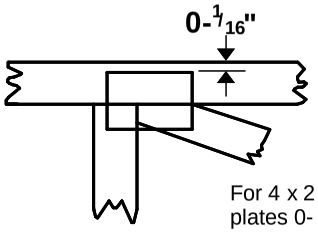

For 4 x 2 orientation, locate plates 0- 1/16" from outside edge of truss.

This symbol indicates the required direction of slots in connector plates.

*** Plate location details available in MiTek 20/20 software or upon request.**

PLATE SIZE

4 x 4

The first dimension is the plate width measured perpendicular to slots. Second dimension is the length parallel to slots.

LATERAL BRACING LOCATION

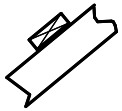

Indicated by symbol shown and/or by text in the bracing section of the output. Use T or I bracing if indicated.

BEARING

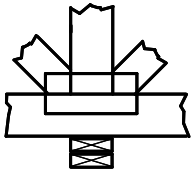

Indicates location where bearings (supports) occur. Icons vary but reaction section indicates joint number where bearings occur. Min size shown is for crushing only.

Industry Standards:

ANSI/TPI1: National Design Specification for Metal Plate Connected Wood Truss Construction.
DSB-89: Design Standard for Bracing.
BCSI: Building Component Safety Information, Guide to Good Practice for Handling, Installing & Bracing of Metal Plate Connected Wood Trusses.

Numbering System

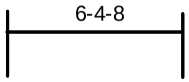

dimensions shown in ft-in-sixteenths
(Drawings not to scale)

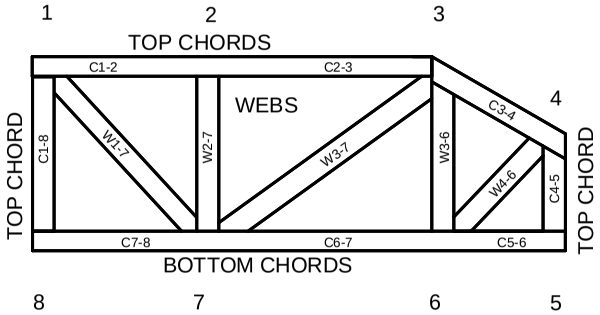

JOINTS ARE GENERALLY NUMBERED/LETTERED CLOCKWISE AROUND THE TRUSS STARTING AT THE JOINT FARTHEST TO THE LEFT.

CHORDS AND WEBS ARE IDENTIFIED BY END JOINT NUMBERS/LETTERS.

PRODUCT CODE APPROVALS

ICC-ES Reports:

ESR-1311, ESR-1352, ESR1988
ER-3907, ESR-2362, ESR-1397, ESR-3282

Trusses are designed for wind loads in the plane of the truss unless otherwise shown.

Lumber design values are in accordance with ANSI/TPI 1 section 6.3 These truss designs rely on lumber values established by others.

© 2012 MiTek® All Rights Reserved

MiTek

ENGINEERING BY TRENCO
A MiTek Affiliate

MiTek Engineering Reference Sheet: MII-7473 rev. 10/03/2015

General Safety Notes

Failure to Follow Could Cause Property Damage or Personal Injury

1. Additional stability bracing for truss system, e.g. diagonal or X-bracing, is always required. See BCSI.
2. Truss bracing must be designed by an engineer. For wide truss spacing, individual lateral braces themselves may require bracing, or alternative Tor I bracing should be considered.
3. Never exceed the design loading shown and never stack materials on inadequately braced trusses.
4. Provide copies of this truss design to the building designer, erection supervisor, property owner and all other interested parties.
5. Cut members to bear tightly against each other.
6. Place plates on each face of truss at each joint and embed fully. Knots and wane at joint locations are regulated by ANSI/TPI 1.
7. Design assumes trusses will be suitably protected from the environment in accord with ANSI/TPI 1.
8. Unless otherwise noted, moisture content of lumber shall not exceed 19% at time of fabrication.
9. Unless expressly noted, this design is not applicable for use with fire retardant, preservative treated, or green lumber.
10. Camber is a non-structural consideration and is the responsibility of truss fabricator. General practice is to camber for dead load deflection.
11. Plate type, size, orientation and location dimensions indicated are minimum plating requirements.
12. Lumber used shall be of the species and size, and in all respects, equal to or better than that specified.
13. Top chords must be sheathed or purlins provided at spacing indicated on design.
14. Bottom chords require lateral bracing at 10 ft. spacing, or less, if no ceiling is installed, unless otherwise noted.
15. Connections not shown are the responsibility of others.
16. Do not cut or alter truss member or plate without prior approval of an engineer.
17. Install and load vertically unless indicated otherwise.
18. Use of green or treated lumber may pose unacceptable environmental, health or performance risks. Consult with project engineer before use.
19. Review all portions of this design (front, back, words and pictures) before use. Reviewing pictures alone is not sufficient.
20. Design assumes manufacture in accordance with ANSI/TPI 1 Quality Criteria.