ENGINEERING BY TRENCO
A MiTek Affiliate

Trenco
818 Soundside Rd
Edenton, NC 27932

Re: 23412A
240.3174.C

The truss drawing(s) referenced below have been prepared by Truss Engineering Co. under my direct supervision based on the parameters provided by 84 Components - #2383.

Pages or sheets covered by this seal: I40522807 thru I40522841

My license renewal date for the state of North Carolina is December 31, 2020.

North Carolina COA: C-0844

NORTH CAROLINA PROFESSIONAL SEAL 28228 ENGINEER XUEGANG LIU

March 6,2020

Liu, Xuegang

IMPORTANT NOTE: The seal on these truss component designs is a certification that the engineer named is licensed in the jurisdiction(s) identified and that the designs comply with ANSI/TPI 1. These designs are based upon parameters shown (e.g., loads, supports, dimensions, shapes and design codes), which were given to MiTek or TRENCO. Any project specific information included is for MiTek's or TRENCO's customers file reference purpose only, and was not taken into account in the preparation of these designs. MiTek or TRENCO has not independently verified the applicability of the design parameters or the designs for any particular building. Before use, the building designer should verify applicability of design parameters and properly incorporate these designs into the overall building design per ANSI/TPI 1, Chapter 2.

Job	Truss	Truss Type	Qty	Ply	240.3174.C
23412A	AE	COMMON SUPPORTED GAB	2	1	I40522807 Job Reference (optional)

84 Components (Dunn), Dunn, NC - 28334, 8.330 s Feb 13 2020 MiTek Industries, Inc. Fri Mar 6 11:39:51 2020 Page 1
ID:B_Q7f7Biu7XlherXjarx6dzmHHa-4ULi2ujgIfz7c2D28zP4?J7G43O6RHdMxFLYcUzdfAM

-0-10-8 | 5-8-0 | 11-4-0 | 12-2-8
0-10-8 | 5-8-0 | 5-8-0 | 0-10-8

Scale = 1:27.9

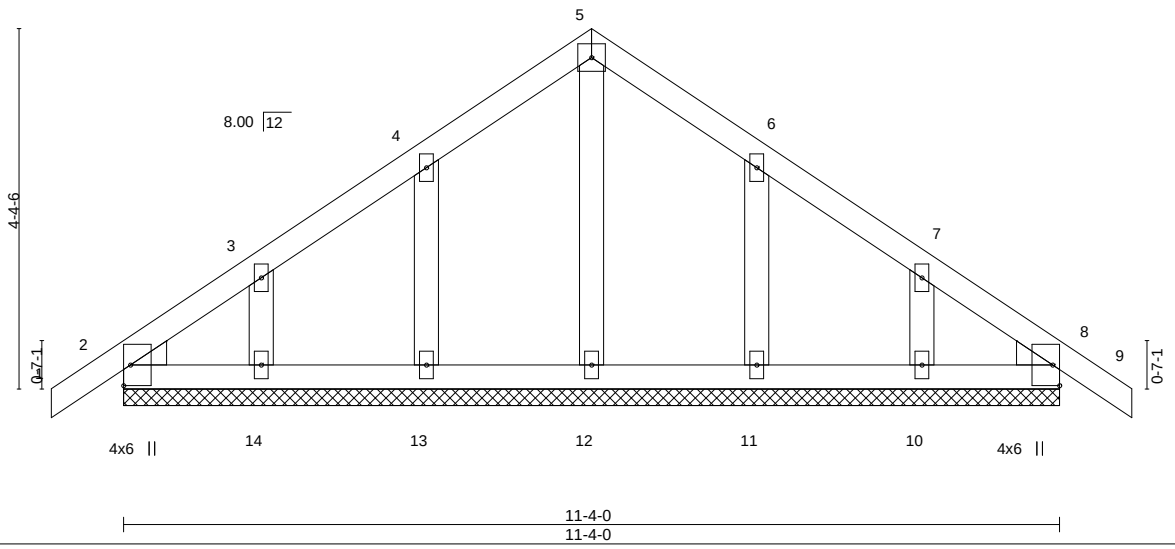

Plate Offsets (X,Y)-- [2:0-0-5,0-0-8], [2:0-0-11,0-4-8], [8:0-0-5,0-0-8], [8:0-0-11,0-4-8]

LOADING (psf)		**SPACING-** 2-0-0		**CSI.**		**DEFL.**	in	(loc)	l/defl	L/d	**PLATES**	**GRIP**
TCLL	20.0	Plate Grip DOL	1.15	TC	0.05	Vert(LL)	-0.00	8	n/r	120	MT20	244/190
TCDL	10.0	Lumber DOL	1.15	BC	0.03	Vert(CT)	-0.00	9	n/r	120		
BCLL	0.0 *	Rep Stress Incr	YES	WB	0.03	Horz(CT)	0.00	8	n/a	n/a		
BCDL	10.0	Code IRC2015/TPI2014		Matrix-S							Weight: 58 lb	FT = 20%

LUMBER-
TOP CHORD 2x4 SP No.2
BOT CHORD 2x4 SP No.2
OTHERS 2x4 SP No.3
WEDGE
Left: 2x4 SP No.3 , Right: 2x4 SP No.3

BRACING-
TOP CHORD Structural wood sheathing directly applied or 6-0-0 oc purlins.
BOT CHORD Rigid ceiling directly applied or 10-0-0 oc bracing.

REACTIONS. All bearings 11-4-0.
(lb) - Max Horz 2=108(LC 11)
Max Uplift All uplift 100 lb or less at joint(s) 2, 13, 14, 11, 10
Max Grav All reactions 250 lb or less at joint(s) 2, 8, 12, 13, 14, 11, 10

FORCES. (lb) - Max. Comp./Max. Ten. - All forces 250 (lb) or less except when shown.

NOTES-
1) Unbalanced roof live loads have been considered for this design.
2) Wind: ASCE 7-10; Vult=130mph (3-second gust) Vasd=103mph; TCDL=6.0psf; BCDL=6.0psf; h=25ft; Cat. II; Exp B; Enclosed; MWFRS (envelope) gable end zone and C-C Corner(3) -0-10-8 to 2-1-8, Exterior(2) 2-1-8 to 5-8-0, Corner(3) 5-8-0 to 8-8-0, Exterior(2) 8-8-0 to 12-2-8 zone;C-C for members and forces & MWFRS for reactions shown; Lumber DOL=1.60 plate grip DOL=1.60
3) Truss designed for wind loads in the plane of the truss only. For studs exposed to wind (normal to the face), see Standard Industry Gable End Details as applicable, or consult qualified building designer as per ANSI/TPI 1.
4) All plates are 2x4 MT20 unless otherwise indicated.
5) Gable requires continuous bottom chord bearing.
6) Gable studs spaced at 2-0-0 oc.
7) This truss has been designed for a 10.0 psf bottom chord live load nonconcurrent with any other live loads.
8) * This truss has been designed for a live load of 20.0psf on the bottom chord in all areas where a rectangle 3-6-0 tall by 2-0-0 wide will fit between the bottom chord and any other members.

March 6,2020

WARNING - Verify design parameters and READ NOTES ON THIS AND INCLUDED MITEK REFERENCE PAGE MII-7473 rev. 10/03/2015 BEFORE USE.
Design valid for use only with MiTek® connectors. This design is based only upon parameters shown, and is for an individual building component, not a truss system. Before use, the building designer must verify the applicability of design parameters and properly incorporate this design into the overall building design. Bracing indicated is to prevent buckling of individual truss web and/or chord members only. Additional temporary and permanent bracing is always required for stability and to prevent collapse with possible personal injury and property damage. For general guidance regarding the fabrication, storage, delivery, erection and bracing of trusses and truss systems, see **ANSI/TPI1 Quality Criteria, DSB-89 and BCSI Building Component Safety Information** available from Truss Plate Institute, 218 N. Lee Street, Suite 312, Alexandria, VA 22314.

ENGINEERING BY TRENCO A MiTek Affiliate
818 Soundside Road
Edenton, NC 27932

Job	Truss	Truss Type	Qty	Ply	240.3174.C
23412A	AG	COMMON GIRDER	1	2	I40522808 Job Reference (optional)

84 Components (Dunn), Dunn, NC - 28334, 8.330 s Feb 13 2020 MiTek Industries, Inc. Fri Mar 6 11:39:52 2020 Page 1
ID:B_Q7f7Biu7XlherXjarx6dzmHHa-Yhv4FEkI3z5_EBoEihwJYWgNrTX9AWqVAv459wzdfAL

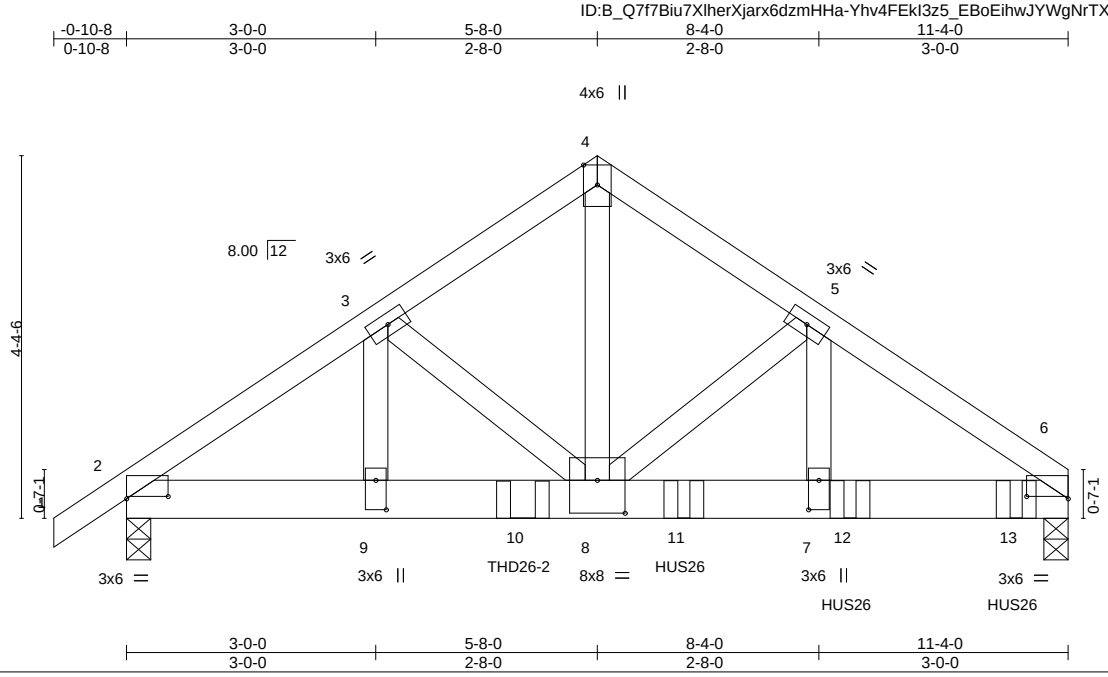

Plate Offsets (X,Y)-- [2:0-6-0,0-0-5], [6:0-6-0,0-0-5], [7:0-4-4,0-1-8], [8:0-4-0,0-4-12], [9:0-4-4,0-1-8]

LOADING (psf)		**SPACING-** 2-0-0		**CSI.**		**DEFL.**	in	(loc)	l/defl	L/d	**PLATES**	**GRIP**
TCLL	20.0	Plate Grip DOL	1.15	TC	0.31	Vert(LL)	0.05	8-9	>999	240	MT20	244/190
TCDL	10.0	Lumber DOL	1.15	BC	0.87	Vert(CT)	-0.08	8-9	>999	180		
BCLL	0.0 *	Rep Stress Incr	NO	WB	0.93	Horz(CT)	0.02	6	n/a	n/a		
BCDL	10.0	Code IRC2015/TPI2014		Matrix-S							Weight: 137 lb	FT = 20%

LUMBER-
TOP CHORD 2x4 SP No.2
BOT CHORD 2x6 SP No.2
WEBS 2x4 SP No.3

BRACING-
TOP CHORD Structural wood sheathing directly applied or 4-10-7 oc purlins.
BOT CHORD Rigid ceiling directly applied or 10-0-0 oc bracing.

REACTIONS. (size) 6=0-3-8 (req. 0-4-2), 2=0-3-8
Max Horz 2=105(LC 24)
Max Uplift 6=-847(LC 9), 2=-731(LC 8)
Max Grav 6=5287(LC 1), 2=3073(LC 1)

FORCES. (lb) - Max. Comp./Max. Ten. - All forces 250 (lb) or less except when shown.
TOP CHORD 2-3=-4824/1175, 3-4=-4269/1009, 4-5=-4271/1010, 5-6=-6056/1074
BOT CHORD 2-9=-945/3776, 8-9=-945/3776, 7-8=-815/4783, 6-7=-815/4783
WEBS 4-8=-1050/4491, 5-8=-1620/132, 5-7=-105/2175, 3-8=-348/229, 3-9=-241/630

NOTES-
1) 2-ply truss to be connected together with 10d (0.131"x3") nails as follows:
Top chords connected as follows: 2x4 - 1 row at 0-9-0 oc.
Bottom chords connected as follows: 2x6 - 2 rows staggered at 0-4-0 oc.
Webs connected as follows: 2x4 - 1 row at 0-9-0 oc.
2) All loads are considered equally applied to all plies, except if noted as front (F) or back (B) face in the LOAD CASE(S) section. Ply to ply connections have been provided to distribute only loads noted as (F) or (B), unless otherwise indicated.
3) Unbalanced roof live loads have been considered for this design.
4) Wind: ASCE 7-10; Vult=130mph (3-second gust) Vasd=103mph; TCDL=6.0psf; BCDL=6.0psf; h=25ft; Cat. II; Exp B; Enclosed; MWFRS (envelope) gable end zone; Lumber DOL=1.60 plate grip DOL=1.60
5) This truss has been designed for a 10.0 psf bottom chord live load nonconcurrent with any other live loads.
6) * This truss has been designed for a live load of 20.0psf on the bottom chord in all areas where a rectangle 3-6-0 tall by 2-0-0 wide will fit between the bottom chord and any other members.
7) WARNING: Required bearing size at joint(s) 6 greater than input bearing size.
8) Provide mechanical connection (by others) of truss to bearing plate capable of withstanding 100 lb uplift at joint(s) except (jt=lb) 6=847, 2=731.
9) Use USP THD26-2 (With 18-16d nails into Girder & 12-10d nails into Truss) or equivalent at 4-9-4 from the left end to connect truss(es) to back face of bottom chord.
10) Use USP HUS26 (With 14-16d nails into Girder & 6-16d nails into Truss) or equivalent spaced at 2-0-0 oc max. starting at 6-8-8 from the left end to 10-8-8 to connect truss(es) to back face of bottom chord.
11) Fill all nail holes where hanger is in contact with lumber.

LOAD CASE(S) Standard
1) Dead + Roof Live (balanced): Lumber Increase=1.15, Plate Increase=1.15

March 6,2020

Continued on page 2

WARNING - Verify design parameters and READ NOTES ON THIS AND INCLUDED MITEK REFERENCE PAGE MII-7473 rev. 10/03/2015 BEFORE USE.
Design valid for use only with MiTek® connectors. This design is based only upon parameters shown, and is for an individual building component, not a truss system. Before use, the building designer must verify the applicability of design parameters and properly incorporate this design into the overall building design. Bracing indicated is to prevent buckling of individual truss web and/or chord members only. Additional temporary and permanent bracing is always required for stability and to prevent collapse with possible personal injury and property damage. For general guidance regarding the fabrication, storage, delivery, erection and bracing of trusses and truss systems, see **ANSI/TPI1 Quality Criteria, DSB-89 and BCSI Building Component Safety Information** available from Truss Plate Institute, 218 N. Lee Street, Suite 312, Alexandria, VA 22314.

ENGINEERING BY TRENCO A MiTek Affiliate
818 Soundside Road
Edenton, NC 27932

LOAD CASE(S) Standard

Uniform Loads (plf)

Vert: 1-4=-60, 4-6=-60, 2-6=-20

Concentrated Loads (lb)

Vert: 10=-2533(B) 11=-1626(B) 12=-1626(B) 13=-1631(B)

WARNING - Verify design parameters and READ NOTES ON THIS AND INCLUDED MITEK REFERENCE PAGE MII-7473 rev. 10/03/2015 BEFORE USE.

Design valid for use only with MiTek® connectors. This design is based only upon parameters shown, and is for an individual building component, not a truss system. Before use, the building designer must verify the applicability of design parameters and properly incorporate this design into the overall building design. Bracing indicated is to prevent buckling of individual truss web and/or chord members only. Additional temporary and permanent bracing is always required for stability and to prevent collapse with possible personal injury and property damage. For general guidance regarding the fabrication, storage, delivery, erection and bracing of trusses and truss systems, see **ANSI/TPI1 Quality Criteria, DSB-89 and BCSI Building Component Safety Information** available from Truss Plate Institute, 218 N. Lee Street, Suite 312, Alexandria, VA 22314.

ENGINEERING BY TRENCO A MiTek Affiliate

818 Soundside Road
Edenton, NC 27932

Job	Truss	Truss Type	Qty	Ply	240.3174.C
23412A	BE	COMMON STRUCTURAL GA	1	1	I40522809 Job Reference (optional)

84 Components (Dunn), Dunn, NC - 28334, 8.330 s Feb 13 2020 MiTek Industries, Inc. Fri Mar 6 11:39:53 2020 Page 1

ID:B_Q7f7Biu7XlherXjarx6dzmHHa-1tTTTakwqGDrrLNQFORY5kDTEtrkv?LfPZqehMzdfAK

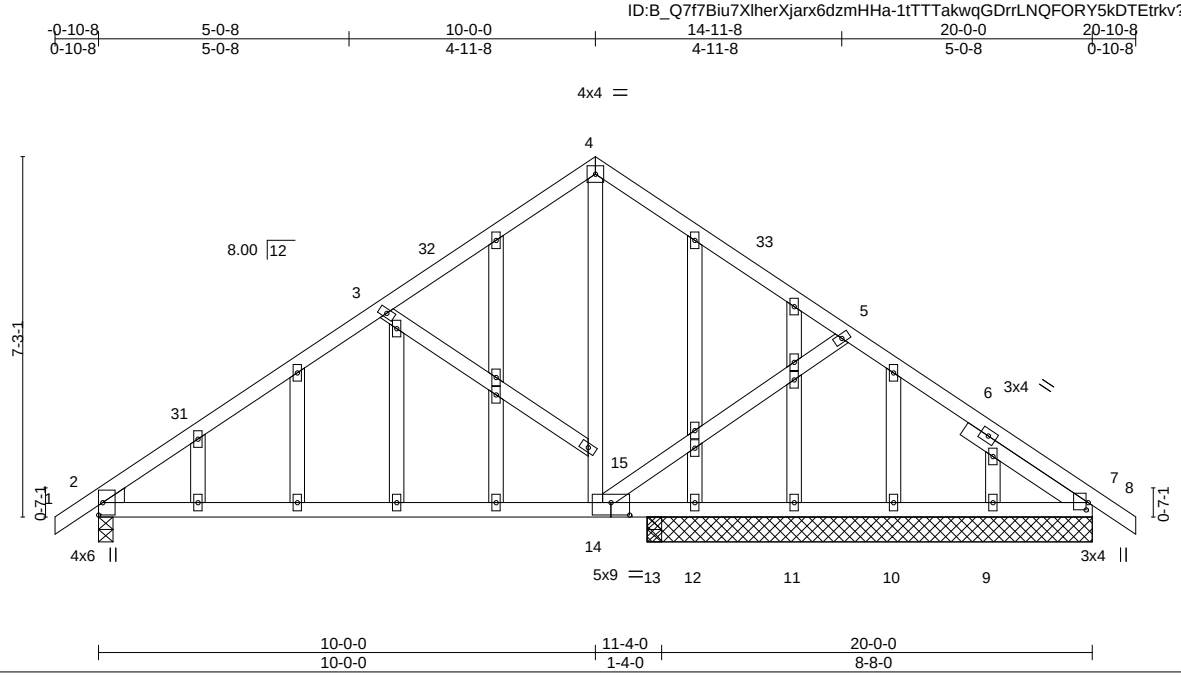

Plate Offsets (X,Y)-- [2:0-0-5,0-0-8], [2:0-0-11,0-4-8], [7:0-1-12,0-0-8], [14:0-4-8,0-3-0]

LOADING (psf)		SPACING- 2-0-0		CSI.		DEFL.	in	(loc)	l/defl	L/d	PLATES	GRIP
TCLL	20.0	Plate Grip DOL	1.15	TC	0.59	Vert(LL)	-0.24	2-14	>545	240	MT20	244/190
TCDL	10.0	Lumber DOL	1.15	BC	0.98	Vert(CT)	-0.52	2-14	>255	180		
BCLL	0.0 *	Rep Stress Incr	NO	WB	0.78	Horz(CT)	0.02	7	n/a	n/a		
BCDL	10.0	Code IRC2015/TPI2014		Matrix-S							Weight: 138 lb	FT = 20%

LUMBER-

TOP CHORD 2x4 SP No.2
BOT CHORD 2x4 SP No.2
WEBS 2x4 SP No.3 *Except*
4-14: 2x4 SP No.2
OTHERS 2x4 SP No.3
WEDGE
Left: 2x4 SP No.3
SLIDER Right 2x4 SP No.3 -x 2-10-13

BRACING-

TOP CHORD Structural wood sheathing directly applied or 4-11-2 oc purlins.
BOT CHORD Rigid ceiling directly applied or 10-0-0 oc bracing.

REACTIONS. All bearings 8-11-8 except (jt=length) 2=0-3-8, 13=0-3-8.
(lb) - Max Horz 2=-179(LC 10)
Max Uplift All uplift 100 lb or less at joint(s) 2 except 7=-106(LC 13), 12=-247(LC 1), 13=-138(LC 12)
Max Grav All reactions 250 lb or less at joint(s) 12, 11, 10, 9 except 2=816(LC 1), 7=716(LC 1), 13=300(LC 1)

FORCES. (lb) - Max. Comp./Max. Ten. - All forces 250 (lb) or less except when shown.
TOP CHORD 2-3=-955/114, 3-4=-668/93, 4-5=-723/112, 5-7=-986/136
BOT CHORD 2-14=-99/760, 13-14=-31/734, 12-13=-31/734, 11-12=-31/734, 10-11=-31/734, 9-10=-31/734, 7-9=-31/734
WEBS 14-15=0/471, 4-15=0/547, 5-14=-286/219, 3-15=-317/207

NOTES-

1) Unbalanced roof live loads have been considered for this design.
2) Wind: ASCE 7-10; Vult=130mph (3-second gust) Vasd=103mph; TCDL=6.0psf; BCDL=6.0psf; h=25ft; Cat. II; Exp B; Enclosed; MWFRS (envelope) gable end zone and C-C Exterior(2) -0-10-8 to 2-1-8, Interior(1) 2-1-8 to 10-0-0, Exterior(2) 10-0-0 to 13-0-0, Interior(1) 13-0-0 to 20-10-8 zone;C-C for members and forces & MWFRS for reactions shown; Lumber DOL=1.60 plate grip DOL=1.60
3) Truss designed for wind loads in the plane of the truss only. For studs exposed to wind (normal to the face), see Standard Industry Gable End Details as applicable, or consult qualified building designer as per ANSI/TPI 1.
4) All plates are 2x4 MT20 unless otherwise indicated.
5) Gable studs spaced at 2-0-0 oc.
6) This truss has been designed for a 10.0 psf bottom chord live load nonconcurrent with any other live loads.
7) * This truss has been designed for a live load of 20.0psf on the bottom chord in all areas where a rectangle 3-6-0 tall by 2-0-0 wide will fit between the bottom chord and any other members.
8) Provide mechanical connection (by others) of truss to bearing plate capable of withstanding 100 lb uplift at joint(s) 2 except (jt=lb) 7=106, 12=247, 13=138.
9) In the LOAD CASE(S) section, loads applied to the face of the truss are noted as front (F) or back (B).

LOAD CASE(S) Standard

March 6,2020

Continued on page 2

WARNING - Verify design parameters and READ NOTES ON THIS AND INCLUDED MITEK REFERENCE PAGE MII-7473 rev. 10/03/2015 BEFORE USE.
Design valid for use only with MiTek® connectors. This design is based only upon parameters shown, and is for an individual building component, not a truss system. Before use, the building designer must verify the applicability of design parameters and properly incorporate this design into the overall building design. Bracing indicated is to prevent buckling of individual truss web and/or chord members only. Additional temporary and permanent bracing is always required for stability and to prevent collapse with possible personal injury and property damage. For general guidance regarding the fabrication, storage, delivery, erection and bracing of trusses and truss systems, see **ANSI/TPI1 Quality Criteria, DSB-89 and BCSI Building Component Safety Information** available from Truss Plate Institute, 218 N. Lee Street, Suite 312, Alexandria, VA 22314.

ENGINEERING BY TRENCO A MiTek Affiliate
818 Soundside Road
Edenton, NC 27932

LOAD CASE(S) Standard

1) Dead + Roof Live (balanced): Lumber Increase=1.15, Plate Increase=1.15
   Uniform Loads (plf)
   Vert: 1-4=-60, 4-8=-60, 2-7=-20, 3-15=-10(F)

WARNING - Verify design parameters and READ NOTES ON THIS AND INCLUDED MITEK REFERENCE PAGE MII-7473 rev. 10/03/2015 BEFORE USE.

Design valid for use only with MiTek® connectors. This design is based only upon parameters shown, and is for an individual building component, not a truss system. Before use, the building designer must verify the applicability of design parameters and properly incorporate this design into the overall building design. Bracing indicated is to prevent buckling of individual truss web and/or chord members only. Additional temporary and permanent bracing is always required for stability and to prevent collapse with possible personal injury and property damage. For general guidance regarding the fabrication, storage, delivery, erection and bracing of trusses and truss systems, see **ANSI/TPI1 Quality Criteria, DSB-89 and BCSI Building Component Safety Information** available from Truss Plate Institute, 218 N. Lee Street, Suite 312, Alexandria, VA 22314.

ENGINEERING BY TRENCO A MiTek Affiliate

818 Soundside Road
Edenton, NC 27932

Job	Truss	Truss Type	Qty	Ply	240.3174.C
23412A	BG	COMMON GIRDER	1	3	I40522810 Job Reference (optional)

84 Components (Dunn), Dunn, NC - 28334, 8.330 s Feb 13 2020 MiTek Industries, Inc. Fri Mar 6 11:39:54 2020 Page 1

ID:B_Q7f7Biu7XlherXjarx6dzmHHa-V31rgwlYbaLiTVydp6zndxIg7HCreUxoeCZCDpzdfAJ

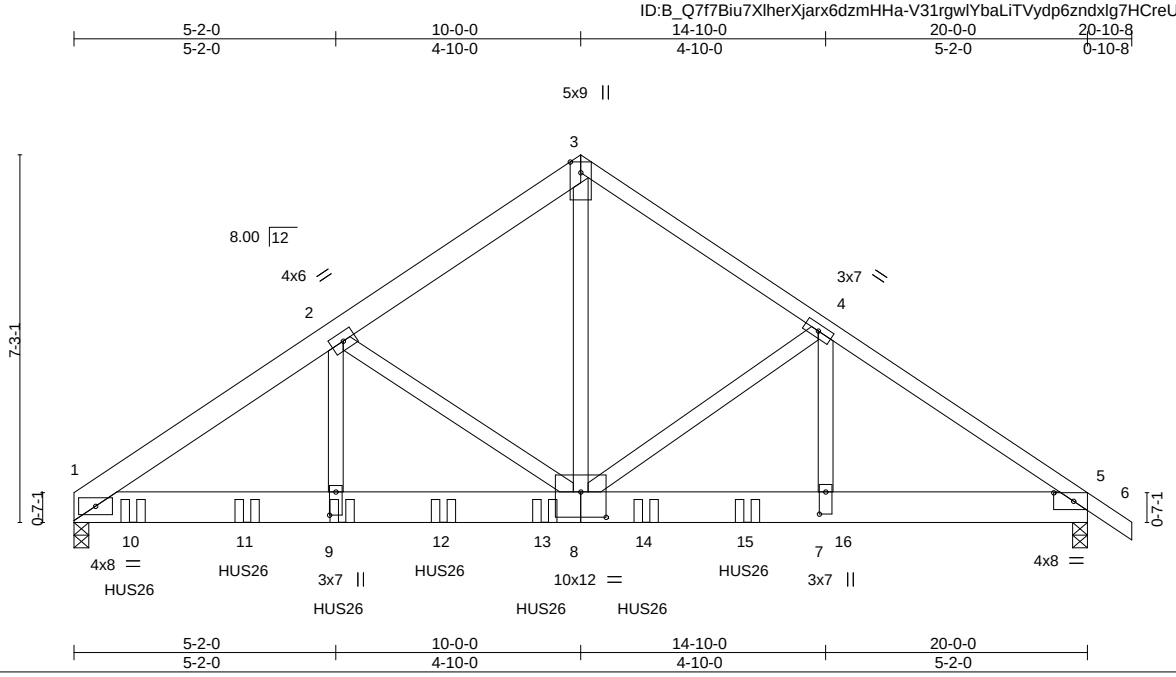

Plate Offsets (X,Y)-- [5:0-4-11,0-2-0], [7:0-5-4,0-1-8], [8:0-6-0,0-6-0], [9:0-5-8,0-1-8]

LOADING (psf)		SPACING-	2-0-0	CSI.		DEFL.	in	(loc)	l/defl	L/d	PLATES	GRIP
TCLL	20.0	Plate Grip DOL	1.15	TC	0.45	Vert(LL)	-0.09	7-8	>999	240	MT20	244/190
TCDL	10.0	Lumber DOL	1.15	BC	0.92	Vert(CT)	-0.18	7-8	>999	180		
BCLL	0.0 *	Rep Stress Incr	NO	WB	0.70	Horz(CT)	0.05	5	n/a	n/a		
BCDL	10.0	Code IRC2015/TPI2014		Matrix-S							Weight: 434 lb	FT = 20%

LUMBER-

TOP CHORD 2x6 SP No.2 *Except*
3-6: 2x4 SP No.2
BOT CHORD 2x8 SP No.2
WEBS 2x4 SP No.3 *Except*
3-8: 2x4 SP No.2

BRACING-

TOP CHORD Structural wood sheathing directly applied or 6-0-0 oc purlins.
BOT CHORD Rigid ceiling directly applied or 10-0-0 oc bracing.

REACTIONS. (size) 1=0-3-8 (req. 0-4-8), 5=0-3-8 (req. 0-3-10)
Max Horz 1=-174(LC 25)
Max Uplift 1=-1204(LC 8), 5=-1299(LC 9)
Max Grav 1=8646(LC 1), 5=6906(LC 1)

FORCES. (lb) - Max. Comp./Max. Ten. - All forces 250 (lb) or less except when shown.
TOP CHORD 1-2=-11928/1694, 2-3=-8097/1274, 3-4=-8053/1266, 4-5=-11347/2071
BOT CHORD 1-9=-1426/9782, 8-9=-1426/9782, 7-8=-1613/9184, 5-7=-1613/9184
WEBS 3-8=-1294/8541, 4-8=-3129/978, 4-7=-955/3707, 2-8=-3834/616, 2-9=-471/4165

NOTES-

1) 3-ply truss to be connected together with 10d (0.131"x3") nails as follows:
Top chords connected as follows: 2x6 - 2 rows staggered at 0-9-0 oc, 2x4 - 1 row at 0-9-0 oc.
Bottom chords connected as follows: 2x8 - 3 rows staggered at 0-4-0 oc.
Webs connected as follows: 2x4 - 1 row at 0-9-0 oc.
2) All loads are considered equally applied to all plies, except if noted as front (F) or back (B) face in the LOAD CASE(S) section. Ply to ply connections have been provided to distribute only loads noted as (F) or (B), unless otherwise indicated.
3) Unbalanced roof live loads have been considered for this design.
4) Wind: ASCE 7-10; Vult=130mph (3-second gust) Vasd=103mph; TCDL=6.0psf; BCDL=6.0psf; h=25ft; Cat. II; Exp B; Enclosed; MWFRS (envelope) gable end zone; Lumber DOL=1.60 plate grip DOL=1.60
5) This truss has been designed for a 10.0 psf bottom chord live load nonconcurrent with any other live loads.
6) * This truss has been designed for a live load of 20.0psf on the bottom chord in all areas where a rectangle 3-6-0 tall by 2-0-0 wide will fit between the bottom chord and any other members.
7) WARNING: Required bearing size at joint(s) 1, 5 greater than input bearing size.
8) Provide mechanical connection (by others) of truss to bearing plate capable of withstanding 100 lb uplift at joint(s) except (jt=lb) 1=1204, 5=1299.
9) Use USP HUS26 (With 14-16d nails into Girder & 6-16d nails into Truss) or equivalent spaced at 2-3-0 oc max. starting at 1-2-0 from the left end to 13-3-8 to connect truss(es) to back face of bottom chord.
10) Fill all nail holes where hanger is in contact with lumber.
11) Hanger(s) or other connection device(s) shall be provided sufficient to support concentrated load(s) 2533 lb down and 939 lb up at 15-2-12 on bottom chord. The design/selection of such connection device(s) is the responsibility of others.

LOAD CASE(S) Standard

March 6,2020

Continued on page 2

WARNING - Verify design parameters and READ NOTES ON THIS AND INCLUDED MITEK REFERENCE PAGE MII-7473 rev. 10/03/2015 BEFORE USE.
Design valid for use only with MiTek® connectors. This design is based only upon parameters shown, and is for an individual building component, not a truss system. Before use, the building designer must verify the applicability of design parameters and properly incorporate this design into the overall building design. Bracing indicated is to prevent buckling of individual truss web and/or chord members only. Additional temporary and permanent bracing is always required for stability and to prevent collapse with possible personal injury and property damage. For general guidance regarding the fabrication, storage, delivery, erection and bracing of trusses and truss systems, see **ANSI/TPI1 Quality Criteria, DSB-89 and BCSI Building Component Safety Information** available from Truss Plate Institute, 218 N. Lee Street, Suite 312, Alexandria, VA 22314.

ENGINEERING BY TRENCO A MiTek Affiliate
818 Soundside Road
Edenton, NC 27932

LOAD CASE(S) Standard

1) Dead + Roof Live (balanced): Lumber Increase=1.15, Plate Increase=1.15
   Uniform Loads (plf)
   Vert: 1-3=-60, 3-6=-60, 1-5=-20
   Concentrated Loads (lb)
   Vert: 9=-1626(B) 10=-1626(B) 11=-1626(B) 12=-1626(B) 13=-1626(B) 14=-1626(B) 15=-1626(B) 16=-2533(B)

WARNING - Verify design parameters and READ NOTES ON THIS AND INCLUDED MITEK REFERENCE PAGE MII-7473 rev. 10/03/2015 BEFORE USE.
Design valid for use only with MiTek® connectors. This design is based only upon parameters shown, and is for an individual building component, not a truss system. Before use, the building designer must verify the applicability of design parameters and properly incorporate this design into the overall building design. Bracing indicated is to prevent buckling of individual truss web and/or chord members only. Additional temporary and permanent bracing is always required for stability and to prevent collapse with possible personal injury and property damage. For general guidance regarding the fabrication, storage, delivery, erection and bracing of trusses and truss systems, see **ANSI/TPI1 Quality Criteria, DSB-89 and BCSI Building Component Safety Information** available from Truss Plate Institute, 218 N. Lee Street, Suite 312, Alexandria, VA 22314.

ENGINEERING BY TRENCO A MiTek Affiliate
818 Soundside Road
Edenton, NC 27932

Job	Truss	Truss Type	Qty	Ply	240.3174.C
23412A	H1	HIP	2	1	I40522811
					Job Reference (optional)

84 Components (Dunn), Dunn, NC - 28334, 8.330 s Feb 13 2020 MiTek Industries, Inc. Fri Mar 6 11:39:55 2020 Page 1

ID:B_Q7f7Biu7XlherXjarx6dzmHHa-zGbDuGmAMuTZ5fXpNpU0A9IkWgZONzwyssJlmFzdfAI

-0-10-8	5-11-5	11-2-13	17-7-10	20-10-0	24-0-6	30-5-3	35-8-11	41-4-8
0-10-8	5-11-5	5-3-8	6-4-13	3-2-6	3-2-6	6-4-13	5-3-8	5-7-13

Scale = 1:73.4

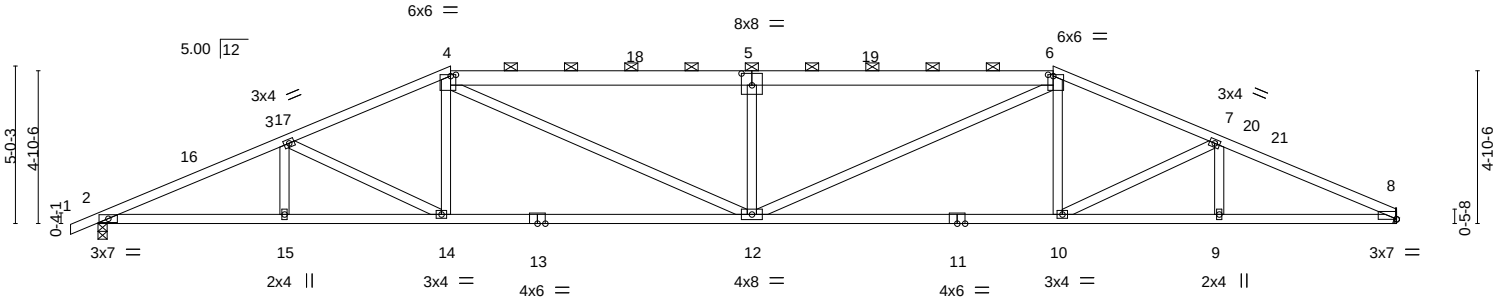

5-11-5	11-2-13	20-10-0	30-5-3	35-8-11	41-4-8
5-11-5	5-3-8	9-7-3	9-7-3	5-3-8	5-7-13

Plate Offsets (X,Y)-- [4:0-2-0,0-0-8], [5:0-4-0,0-4-8], [6:0-2-0,0-0-8], [8:0-0-0,0-0-2]

LOADING (psf)		SPACING-	2-0-0	CSI.		DEFL.	in	(loc)	l/defl	L/d	PLATES	GRIP
TCLL	20.0	Plate Grip DOL	1.15	TC	0.92	Vert(LL)	-0.30	12	>999	240	MT20	244/190
TCDL	10.0	Lumber DOL	1.15	BC	0.84	Vert(CT)	-0.69	12-14	>714	180		
BCLL	0.0 *	Rep Stress Incr	YES	WB	0.52	Horz(CT)	0.18	8	n/a	n/a		
BCDL	10.0	Code IRC2015/TPI2014		Matrix-S							Weight: 216 lb	FT = 20%

LUMBER-

TOP CHORD 2x4 SP No.2 *Except* 4-5,5-6: 2x6 SP No.2

BOT CHORD 2x4 SP No.1

WEBS 2x4 SP No.3

BRACING-

TOP CHORD Structural wood sheathing directly applied, except 2-0-0 oc purlins (2-8-12 max.): 4-6.

BOT CHORD Rigid ceiling directly applied or 9-0-4 oc bracing.

REACTIONS. (size) 8=Mechanical, 2=0-3-8
Max Horz 2=88(LC 16)
Max Uplift 8=-179(LC 9), 2=-208(LC 8)
Max Grav 8=1646(LC 1), 2=1709(LC 1)

FORCES. (lb) - Max. Comp./Max. Ten. - All forces 250 (lb) or less except when shown.

TOP CHORD 2-3=-3678/564, 3-4=-3235/517, 4-5=-3932/643, 5-6=-3932/643, 6-7=-3201/507, 7-8=-3583/549

BOT CHORD 2-15=-476/3317, 14-15=-476/3317, 12-14=-352/2942, 10-12=-336/2910, 9-10=-454/3227, 8-9=-454/3227

WEBS 3-14=-414/180, 4-14=0/440, 4-12=-227/1233, 6-12=-230/1264, 6-10=0/417, 7-10=-352/179, 5-12=-757/317

NOTES-

1) Unbalanced roof live loads have been considered for this design.
2) Wind: ASCE 7-10; Vult=130mph (3-second gust) Vasd=103mph; TCDL=6.0psf; BCDL=6.0psf; h=25ft; Cat. II; Exp B; Enclosed; MWFRS (envelope) gable end zone and C-C Exterior(2) -0-10-8 to 3-3-2, Interior(1) 3-3-2 to 11-2-13, Exterior(2) 11-2-13 to 17-1-0, Interior(1) 17-1-0 to 30-5-3, Exterior(2) 30-5-3 to 36-3-7, Interior(1) 36-3-7 to 41-3-12 zone;C-C for members and forces & MWFRS for reactions shown; Lumber DOL=1.60 plate grip DOL=1.60
3) Provide adequate drainage to prevent water ponding.
4) This truss has been designed for a 10.0 psf bottom chord live load nonconcurrent with any other live loads.
5) * This truss has been designed for a live load of 20.0psf on the bottom chord in all areas where a rectangle 3-6-0 tall by 2-0-0 wide will fit between the bottom chord and any other members.
6) Refer to girder(s) for truss to truss connections.
7) Provide mechanical connection (by others) of truss to bearing plate capable of withstanding 100 lb uplift at joint(s) except (jt=lb) 8=179.
8) One RT7A USP connectors recommended to connect truss to bearing walls due to UPLIFT at jt(s) 2. This connection is for uplift only and does not consider lateral forces.
9) Graphical purlin representation does not depict the size or the orientation of the purlin along the top and/or bottom chord.

March 6,2020

WARNING - Verify design parameters and READ NOTES ON THIS AND INCLUDED MITEK REFERENCE PAGE MII-7473 rev. 10/03/2015 BEFORE USE.
Design valid for use only with MiTek® connectors. This design is based only upon parameters shown, and is for an individual building component, not a truss system. Before use, the building designer must verify the applicability of design parameters and properly incorporate this design into the overall building design. Bracing indicated is to prevent buckling of individual truss web and/or chord members only. Additional temporary and permanent bracing is always required for stability and to prevent collapse with possible personal injury and property damage. For general guidance regarding the fabrication, storage, delivery, erection and bracing of trusses and truss systems, see **ANSI/TPI1 Quality Criteria, DSB-89 and BCSI Building Component Safety Information** available from Truss Plate Institute, 218 N. Lee Street, Suite 312, Alexandria, VA 22314.

ENGINEERING BY TRENCO A MiTek Affiliate
818 Soundside Road
Edenton, NC 27932

Job	Truss	Truss Type	Qty	Ply	240.3174.C
23412A	H2	HIP	2	1	I40522812 Job Reference (optional)

84 Components (Dunn), Dunn, NC - 28334, 8.330 s Feb 13 2020 MiTek Industries, Inc. Fri Mar 6 11:39:57 2020 Page 1

ID:B_Q7f7Biu7XlherXjarx6dzmHHa-vejzJxnRtVjHKzhCUEWUFaN4wUHyroVEKAosq8zdfAG

-0-10-8	7-6-8	14-5-3	20-10-0	27-2-13	34-1-8	41-4-8
0-10-8	7-6-8	6-10-11	6-4-13	6-4-13	6-10-11	7-3-0

Scale = 1:73.4

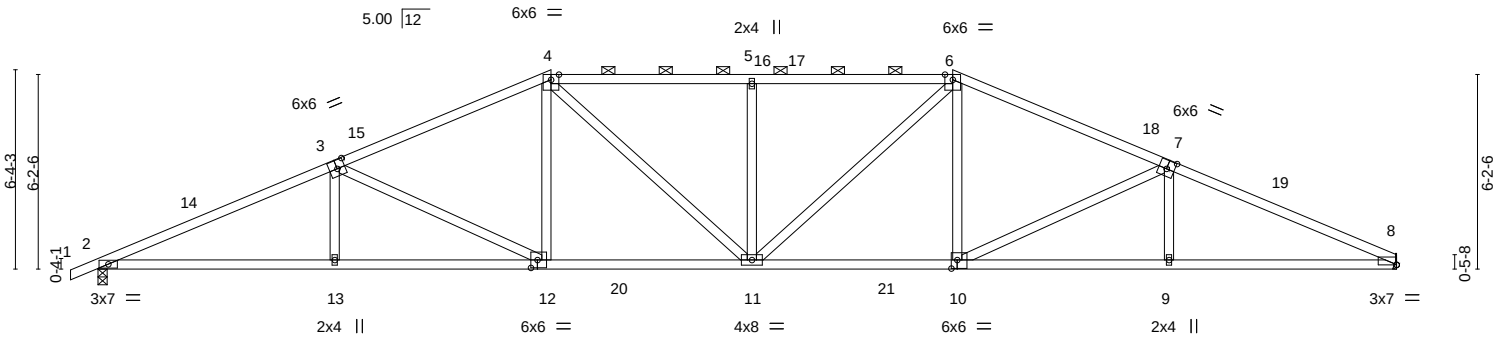

7-6-8	14-5-3	20-10-0	27-2-13	34-1-8	41-4-8
7-6-8	6-10-11	6-4-13	6-4-13	6-10-11	7-3-0

Plate Offsets (X,Y)-- [3:0-3-0,0-3-4], [7:0-3-0,0-3-4], [8:0-0-0,0-0-2], [10:0-2-4,0-3-4], [12:0-2-8,0-3-0]

LOADING (psf)		**SPACING-** 2-0-0	**CSI.**		**DEFL.** in (loc) l/defl L/d	**PLATES**	**GRIP**
TCLL	20.0	Plate Grip DOL 1.15	TC	0.92	Vert(LL) -0.25 11 >999 240	MT20	244/190
TCDL	10.0	Lumber DOL 1.15	BC	0.77	Vert(CT) -0.51 11-12 >960 180		
BCLL	0.0 *	Rep Stress Incr YES	WB	0.77	Horz(CT) 0.18 8 n/a n/a		
BCDL	10.0	Code IRC2015/TPI2014	Matrix-S			Weight: 209 lb	FT = 20%

LUMBER-

TOP CHORD 2x4 SP No.2 *Except*
1-3: 2x4 SP No.1, 7-8: 2x4 SP DSS

BOT CHORD 2x4 SP No.1

WEBS 2x4 SP No.3

BRACING-

TOP CHORD Structural wood sheathing directly applied, except 2-0-0 oc purlins (2-2-0 max.): 4-6.

BOT CHORD Rigid ceiling directly applied or 9-5-9 oc bracing.

REACTIONS. (size) 2=0-3-8, 8=Mechanical
Max Horz 2=111(LC 16)
Max Uplift 2=-171(LC 8), 8=-145(LC 13)
Max Grav 2=1709(LC 1), 8=1646(LC 1)

FORCES. (lb) - Max. Comp./Max. Ten. - All forces 250 (lb) or less except when shown.

TOP CHORD 2-3=-3621/532, 3-4=-2900/487, 4-5=-2918/527, 5-6=-2918/527, 6-7=-2882/480, 7-8=-3544/521

BOT CHORD 2-13=-437/3257, 12-13=-437/3256, 11-12=-288/2594, 10-11=-274/2578, 9-10=-419/3190, 8-9=-418/3191

WEBS 3-13=0/309, 3-12=-729/228, 4-12=-19/486, 4-11=-98/590, 5-11=-489/202, 6-11=-99/609, 6-10=-18/468, 7-10=-678/225, 7-9=0/305

NOTES-

1) Unbalanced roof live loads have been considered for this design.
2) Wind: ASCE 7-10; Vult=130mph (3-second gust) Vasd=103mph; TCDL=6.0psf; BCDL=6.0psf; h=25ft; Cat. II; Exp B; Enclosed; MWFRS (envelope) gable end zone and C-C Exterior(2) -0-10-8 to 3-3-2, Interior(1) 3-3-2 to 14-5-3, Exterior(2) 14-5-3 to 20-3-7, Interior(1) 20-3-7 to 27-2-13, Exterior(2) 27-2-13 to 33-1-0, Interior(1) 33-1-0 to 41-3-12 zone;C-C for members and forces & MWFRS for reactions shown; Lumber DOL=1.60 plate grip DOL=1.60
3) Provide adequate drainage to prevent water ponding.
4) This truss has been designed for a 10.0 psf bottom chord live load nonconcurrent with any other live loads.
5) * This truss has been designed for a live load of 20.0psf on the bottom chord in all areas where a rectangle 3-6-0 tall by 2-0-0 wide will fit between the bottom chord and any other members, with BCDL = 10.0psf.
6) Refer to girder(s) for truss to truss connections.
7) Provide mechanical connection (by others) of truss to bearing plate capable of withstanding 100 lb uplift at joint(s) except (jt=lb) 8=145.
8) One RT7A USP connectors recommended to connect truss to bearing walls due to UPLIFT at jt(s) 2. This connection is for uplift only and does not consider lateral forces.
9) Graphical purlin representation does not depict the size or the orientation of the purlin along the top and/or bottom chord.

March 6,2020

WARNING - Verify design parameters and READ NOTES ON THIS AND INCLUDED MITEK REFERENCE PAGE MII-7473 rev. 10/03/2015 BEFORE USE.
Design valid for use only with MiTek® connectors. This design is based only upon parameters shown, and is for an individual building component, not a truss system. Before use, the building designer must verify the applicability of design parameters and properly incorporate this design into the overall building design. Bracing indicated is to prevent buckling of individual truss web and/or chord members only. Additional temporary and permanent bracing is always required for stability and to prevent collapse with possible personal injury and property damage. For general guidance regarding the fabrication, storage, delivery, erection and bracing of trusses and truss systems, see **ANSI/TPI1 Quality Criteria, DSB-89 and BCSI Building Component Safety Information** available from Truss Plate Institute, 218 N. Lee Street, Suite 312, Alexandria, VA 22314.

ENGINEERING BY TRENCO A MiTek Affiliate
818 Soundside Road
Edenton, NC 27932

Job	Truss	Truss Type	Qty	Ply	240.3174.C
23412A	H3	HIP	1	1	I40522813
					Job Reference (optional)

84 Components (Dunn), Dunn, NC - 28334, 8.330 s Feb 13 2020 MiTek Industries, Inc. Fri Mar 6 11:39:58 2020 Page 1

ID:B_Q7f7Biu7XlherXjarx6dzmHHa-NrGMWHo3epr8y7GO2x1jonwGEubSaGjOYqXPMazdfAF

-0-10-8	6-3-12	11-11-11	17-7-10	24-0-6	29-8-5	35-4-4	41-4-8
0-10-8	6-3-12	5-7-15	5-7-15	6-4-13	5-7-15	5-7-15	6-0-4

Scale = 1:73.4

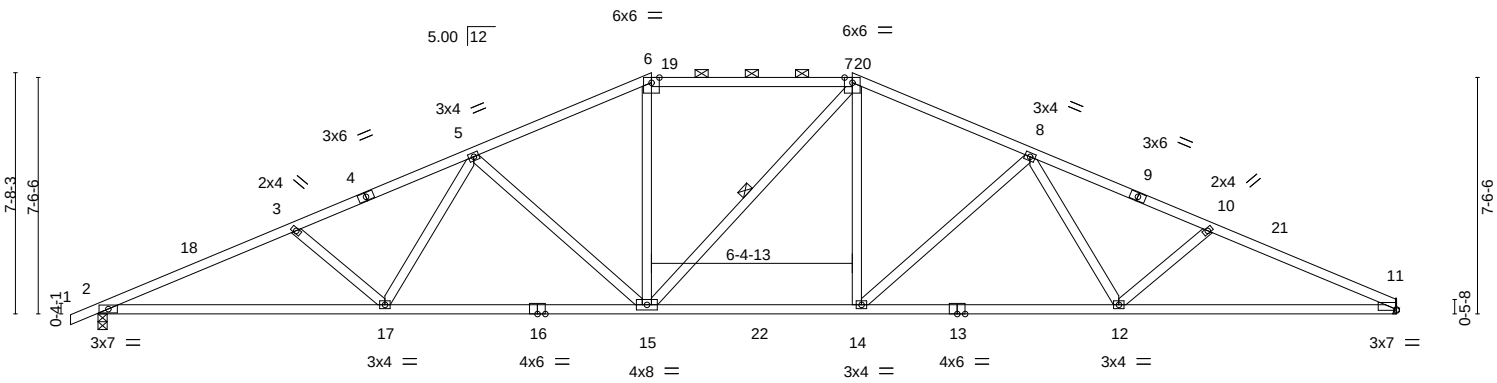

9-1-11	17-7-10	24-0-6	32-6-5	41-4-8
9-1-11	8-5-14	6-4-13	8-5-14	8-10-3

Plate Offsets (X,Y)-- [11:0-0-0,0-0-6]

LOADING (psf)		**SPACING-** 2-0-0	**CSI.**		**DEFL.** in (loc) l/defl L/d	**PLATES**	**GRIP**
TCLL	20.0	Plate Grip DOL 1.15	TC	0.89	Vert(LL) -0.23 14-15 >999 240	MT20	244/190
TCDL	10.0	Lumber DOL 1.15	BC	0.81	Vert(CT) -0.50 15-17 >995 180		
BCLL	0.0 *	Rep Stress Incr YES	WB	0.71	Horz(CT) 0.17 11 n/a n/a		
BCDL	10.0	Code IRC2015/TPI2014	Matrix-S			Weight: 213 lb	FT = 20%

LUMBER-

TOP CHORD 2x4 SP No.2 *Except*
6-7,9-11: 2x4 SP No.1
BOT CHORD 2x4 SP No.1
WEBS 2x4 SP No.3

BRACING-

TOP CHORD Structural wood sheathing directly applied, except
2-0-0 oc purlins (3-0-14 max.): 6-7.
BOT CHORD Rigid ceiling directly applied or 9-6-8 oc bracing.
WEBS 1 Row at midpt 7-15

REACTIONS. (size) 2=0-3-8, 11=Mechanical
Max Horz 2=133(LC 12)
Max Uplift 2=-199(LC 12), 11=-175(LC 13)
Max Grav 2=1709(LC 1), 11=1646(LC 1)

FORCES. (lb) - Max. Comp./Max. Ten. - All forces 250 (lb) or less except when shown.
TOP CHORD 2-3=-3616/508, 3-5=-3340/478, 5-6=-2548/457, 6-7=-2289/459, 7-8=-2540/451,
8-10=-3289/469, 10-11=-3541/511
BOT CHORD 2-17=-423/3275, 15-17=-336/2784, 14-15=-203/2282, 12-14=-322/2757, 11-12=-402/3190
WEBS 3-17=-346/202, 5-17=-25/525, 5-15=-660/221, 6-15=-24/582, 7-14=-61/588,
8-14=-636/218, 8-12=-23/491, 10-12=-301/200

NOTES-

1) Unbalanced roof live loads have been considered for this design.
2) Wind: ASCE 7-10; Vult=130mph (3-second gust) Vasd=103mph; TCDL=6.0psf; BCDL=6.0psf; h=25ft; Cat. II; Exp B; Enclosed; MWFRS (envelope) gable end zone and C-C Exterior(2) -0-10-8 to 3-3-2, Interior(1) 3-3-2 to 17-7-10, Exterior(2) 17-7-10 to 23-5-13, Interior(1) 23-5-13 to 24-0-6, Exterior(2) 24-0-6 to 29-8-5, Interior(1) 29-8-5 to 41-3-12 zone;C-C for members and forces & MWFRS for reactions shown; Lumber DOL=1.60 plate grip DOL=1.60
3) Provide adequate drainage to prevent water ponding.
4) This truss has been designed for a 10.0 psf bottom chord live load nonconcurrent with any other live loads.
5) * This truss has been designed for a live load of 20.0psf on the bottom chord in all areas where a rectangle 3-6-0 tall by 2-0-0 wide will fit between the bottom chord and any other members, with BCDL = 10.0psf.
6) Refer to girder(s) for truss to truss connections.
7) Provide mechanical connection (by others) of truss to bearing plate capable of withstanding 100 lb uplift at joint(s) except (jt=lb) 11=175.
8) One RT7A USP connectors recommended to connect truss to bearing walls due to UPLIFT at jt(s) 2. This connection is for uplift only and does not consider lateral forces.
9) Graphical purlin representation does not depict the size or the orientation of the purlin along the top and/or bottom chord.

March 6,2020

WARNING - Verify design parameters and READ NOTES ON THIS AND INCLUDED MITEK REFERENCE PAGE MII-7473 rev. 10/03/2015 BEFORE USE.
Design valid for use only with MiTek® connectors. This design is based only upon parameters shown, and is for an individual building component, not a truss system. Before use, the building designer must verify the applicability of design parameters and properly incorporate this design into the overall building design. Bracing indicated is to prevent buckling of individual truss web and/or chord members only. Additional temporary and permanent bracing is always required for stability and to prevent collapse with possible personal injury and property damage. For general guidance regarding the fabrication, storage, delivery, erection and bracing of trusses and truss systems, see **ANSI/TPI1 Quality Criteria, DSB-89 and BCSI Building Component Safety Information** available from Truss Plate Institute, 218 N. Lee Street, Suite 312, Alexandria, VA 22314.

ENGINEERING BY TRENCO A MiTek Affiliate
818 Soundside Road
Edenton, NC 27932

Job	Truss	Truss Type	Qty	Ply	240.3174.C
23412A	H3A	ROOF TRUSS	1	1	I40522814 Job Reference (optional)

84 Components (Dunn), Dunn, NC - 28334, 8.330 s Feb 13 2020 MiTek Industries, Inc. Fri Mar 6 11:39:59 2020 Page 1

ID:B_Q7f7Biu7XlherXjarx6dzmHHa-r1qkjdphP6z?ZGqacfYyK?TT9I0AJnFXnUHzv0zdfAE

-0-10-8	6-3-12	11-11-11	24-0-6	29-8-5	35-4-4	41-4-8
0-10-8	6-3-12	5-7-15	12-0-12	5-7-15	5-7-15	6-0-4

Scale = 1:72.3

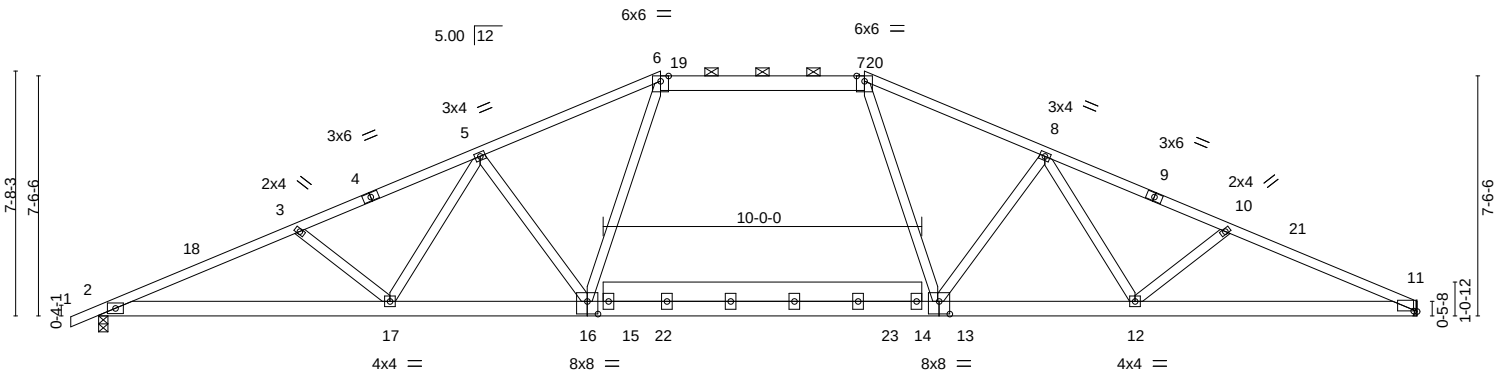

9-1-11	15-4-0	17-7-10	24-0-6	26-4-0	32-6-5	41-4-8
9-1-11	6-2-5	2-3-10	6-4-13	2-3-10	6-2-5	8-10-3

Plate Offsets (X,Y)-- [11:0-1-5,0-0-3], [13:0-4-0,0-4-12], [16:0-4-0,0-4-12]

LOADING (psf)		**SPACING-** 2-0-0	**CSI.**		**DEFL.** in (loc) l/defl L/d	**PLATES**	**GRIP**
TCLL	20.0	Plate Grip DOL 1.15	TC	0.75	Vert(LL) -0.43 16-17 >999 240	MT20	244/190
TCDL	10.0	Lumber DOL 1.15	BC	0.46	Vert(CT) -0.62 16-17 >795 180		
BCLL	0.0 *	Rep Stress Incr YES	WB	0.50	Horz(CT) 0.08 11 n/a n/a		
BCDL	10.0	Code IRC2015/TPI2014	Matrix-S			Weight: 266 lb	FT = 20%

LUMBER-

TOP CHORD 2x4 SP No.2 *Except*
6-7: 2x6 SP No.2

BOT CHORD 2x6 SP DSS *Except*
14-15: 2x8 SP No.2

WEBS 2x4 SP No.3

BRACING-

TOP CHORD Structural wood sheathing directly applied or 2-2-0 oc purlins, except 2-0-0 oc purlins (4-5-12 max.): 6-7.

BOT CHORD Rigid ceiling directly applied or 10-0-0 oc bracing.

REACTIONS. (size) 2=0-3-8, 11=Mechanical
Max Horz 2=134(LC 16)
Max Uplift 2=-199(LC 12), 11=-175(LC 13)
Max Grav 2=1709(LC 1), 11=1646(LC 1)

FORCES. (lb) - Max. Comp./Max. Ten. - All forces 250 (lb) or less except when shown.

TOP CHORD 2-3=-3686/527, 3-5=-3381/494, 5-6=-2758/479, 6-7=-2294/465, 7-8=-2754/486, 8-10=-3325/484, 10-11=-3608/519

BOT CHORD 2-17=-446/3339, 16-17=-332/2828, 13-16=-226/2294, 12-13=-318/2804, 11-12=-423/3253

WEBS 3-17=-366/196, 5-17=-113/617, 5-16=-720/274, 8-13=-685/271, 8-12=-111/568, 10-12=-323/198, 6-16=-29/735, 7-13=-30/727

NOTES-

1) Unbalanced roof live loads have been considered for this design.
2) Wind: ASCE 7-10; Vult=130mph (3-second gust) Vasd=103mph; TCDL=6.0psf; BCDL=6.0psf; h=25ft; Cat. II; Exp B; Enclosed; MWFRS (envelope) gable end zone and C-C Exterior(2) -0-10-8 to 3-3-2, Interior(1) 3-3-2 to 17-7-10, Exterior(2) 17-7-10 to 23-5-13, Interior(1) 23-5-13 to 24-0-6, Exterior(2) 24-0-6 to 29-8-5, Interior(1) 29-8-5 to 41-3-12 zone;C-C for members and forces & MWFRS for reactions shown; Lumber DOL=1.60 plate grip DOL=1.60
3) Provide adequate drainage to prevent water ponding.
4) All plates are 4x6 MT20 unless otherwise indicated.
5) This truss has been designed for a 10.0 psf bottom chord live load nonconcurrent with any other live loads.
6) * This truss has been designed for a live load of 20.0psf on the bottom chord in all areas where a rectangle 3-6-0 tall by 2-0-0 wide will fit between the bottom chord and any other members, with BCDL = 10.0psf.
7) Refer to girder(s) for truss to truss connections.
8) Provide mechanical connection (by others) of truss to bearing plate capable of withstanding 100 lb uplift at joint(s) except (jt=lb) 11=175.
9) One RT7A USP connectors recommended to connect truss to bearing walls due to UPLIFT at jt(s) 2. This connection is for uplift only and does not consider lateral forces.
10) Graphical purlin representation does not depict the size or the orientation of the purlin along the top and/or bottom chord.
11) ATTIC SPACE SHOWN IS DESIGNED AS UNINHABITABLE.

March 6,2020

WARNING - Verify design parameters and READ NOTES ON THIS AND INCLUDED MITEK REFERENCE PAGE MII-7473 rev. 10/03/2015 BEFORE USE.

Design valid for use only with MiTek® connectors. This design is based only upon parameters shown, and is for an individual building component, not a truss system. Before use, the building designer must verify the applicability of design parameters and properly incorporate this design into the overall building design. Bracing indicated is to prevent buckling of individual truss web and/or chord members only. Additional temporary and permanent bracing is always required for stability and to prevent collapse with possible personal injury and property damage. For general guidance regarding the fabrication, storage, delivery, erection and bracing of trusses and truss systems, see **ANSI/TPI1 Quality Criteria, DSB-89 and BCSI Building Component Safety Information** available from Truss Plate Institute, 218 N. Lee Street, Suite 312, Alexandria, VA 22314.

ENGINEERING BY TRENCO A MiTek Affiliate

818 Soundside Road
Edenton, NC 27932

Job	Truss	Truss Type	Qty	Ply	240.3174.C
23412A	HG	HALF HIP GIRDER	2	2	I40522815 Job Reference (optional)

84 Components (Dunn), Dunn, NC - 28334, 8.330 s Feb 13 2020 MiTek Industries, Inc. Fri Mar 6 11:40:04 2020 Page 1

ID:B_Q7f7Biu7XlherXjarx6dzmHHa-C?ednKtqEfbHg2jYPC8712AJKJdX_?uGxm?kaEzdfA9

-0-10-8	4-6-8	8-0-6	14-9-8	21-4-13	28-0-2	34-7-7	41-4-8
0-10-8	4-6-8	3-5-14	6-9-1	6-7-5	6-7-5	6-7-5	6-9-1

Scale = 1:71.2

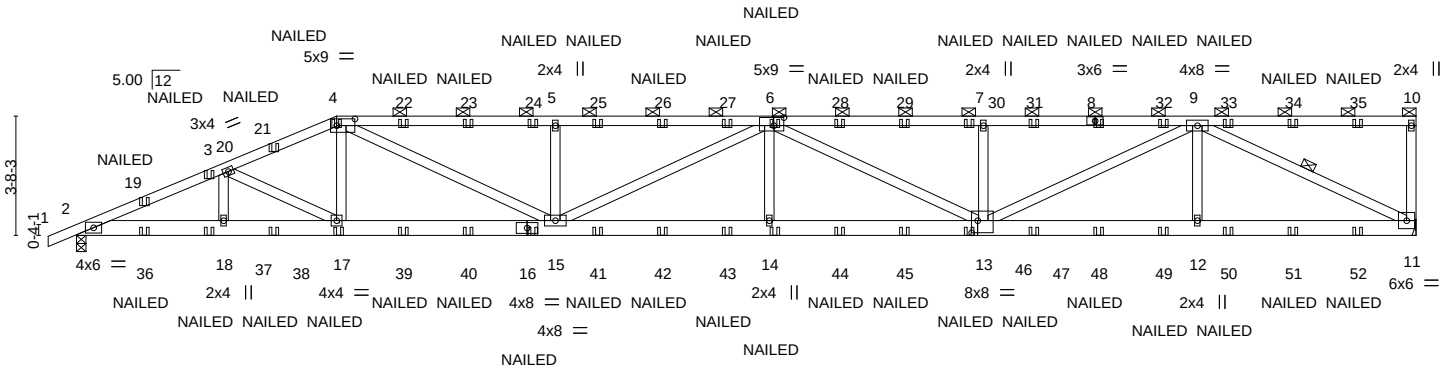

4-6-8	8-0-6	14-9-8	21-4-13	28-0-2	34-7-7	41-4-8
4-6-8	3-5-14	6-9-1	6-7-5	6-7-5	6-7-5	6-9-1

Plate Offsets (X,Y)-- [4:0-6-12,0-2-8], [6:0-3-12,0-3-0], [13:0-2-4,0-4-8]

LOADING (psf)		SPACING-	2-0-0	CSI.		DEFL.	in	(loc)	l/defl	L/d	PLATES	GRIP
TCLL	20.0	Plate Grip DOL	1.15	TC	0.72	Vert(LL)	0.45	14	>999	240	MT20	244/190
TCDL	10.0	Lumber DOL	1.15	BC	0.84	Vert(CT)	-0.68	14-15	>725	180		
BCLL	0.0 *	Rep Stress Incr	NO	WB	0.67	Horz(CT)	0.13	11	n/a	n/a		
BCDL	10.0	Code IRC2015/TPI2014		Matrix-S							Weight: 493 lb	FT = 20%

LUMBER-

TOP CHORD 2x4 SP No.2 *Except*
4-6: 2x4 SP DSS
BOT CHORD 2x6 SP No.2
WEBS 2x4 SP No.3

BRACING-

TOP CHORD Structural wood sheathing directly applied or 4-9-15 oc purlins, except end verticals, and 2-0-0 oc purlins (4-0-12 max.): 4-10.
BOT CHORD Rigid ceiling directly applied or 9-5-0 oc bracing.
WEBS 1 Row at midpt 9-11

REACTIONS. (size) 11=Mechanical, 2=0-3-8
Max Horz 2=142(LC 8)
Max Uplift 11=-919(LC 4), 2=-761(LC 4)
Max Grav 11=2553(LC 1), 2=2607(LC 1)

FORCES. (lb) - Max. Comp./Max. Ten. - All forces 250 (lb) or less except when shown.
TOP CHORD 2-3=-5890/1775, 3-4=-5524/1820, 4-5=-7468/2643, 5-6=-7468/2643, 6-7=-7080/2560, 7-9=-7080/2560, 10-11=-250/163
BOT CHORD 2-18=-1694/5366, 17-18=-1694/5366, 15-17=-1698/5078, 14-15=-2924/8146, 13-14=-2929/8136, 12-13=-1619/4465, 11-12=-1619/4465
WEBS 3-17=-347/71, 4-17=0/562, 4-15=-1054/2661, 5-15=-662/475, 6-15=-756/316, 6-14=0/454, 6-13=-1186/415, 7-13=-588/416, 9-13=-1052/2924, 9-12=0/466, 9-11=-4917/1775

NOTES-

1) 2-ply truss to be connected together with 10d (0.131"x3") nails as follows:
Top chords connected as follows: 2x4 - 1 row at 0-9-0 oc.
Bottom chords connected as follows: 2x6 - 2 rows staggered at 0-9-0 oc.
Webs connected as follows: 2x4 - 1 row at 0-9-0 oc.
2) All loads are considered equally applied to all plies, except if noted as front (F) or back (B) face in the LOAD CASE(S) section. Ply to ply connections have been provided to distribute only loads noted as (F) or (B), unless otherwise indicated.
3) Wind: ASCE 7-10; Vult=130mph (3-second gust) Vasd=103mph; TCDL=6.0psf; BCDL=6.0psf; h=25ft; Cat. II; Exp B; Enclosed; MWFRS (envelope) gable end zone; Lumber DOL=1.60 plate grip DOL=1.60
4) Provide adequate drainage to prevent water ponding.
5) This truss has been designed for a 10.0 psf bottom chord live load nonconcurrent with any other live loads.
6) * This truss has been designed for a live load of 20.0psf on the bottom chord in all areas where a rectangle 3-6-0 tall by 2-0-0 wide will fit between the bottom chord and any other members.
7) Refer to girder(s) for truss to truss connections.
8) Provide mechanical connection (by others) of truss to bearing plate capable of withstanding 100 lb uplift at joint(s) except (jt=lb) 11=919, 2=761.
9) Graphical purlin representation does not depict the size or the orientation of the purlin along the top and/or bottom chord.
10) "NAILED" indicates 3-10d (0.148"x3") or 3-12d (0.148"x3.25") toe-nails per NDS guidlines.

LOAD CASE(S) Standard

March 6,2020

Continued on page 2

WARNING - Verify design parameters and READ NOTES ON THIS AND INCLUDED MITEK REFERENCE PAGE MII-7473 rev. 10/03/2015 BEFORE USE.
Design valid for use only with MiTek® connectors. This design is based only upon parameters shown, and is for an individual building component, not a truss system. Before use, the building designer must verify the applicability of design parameters and properly incorporate this design into the overall building design. Bracing indicated is to prevent buckling of individual truss web and/or chord members only. Additional temporary and permanent bracing is always required for stability and to prevent collapse with possible personal injury and property damage. For general guidance regarding the fabrication, storage, delivery, erection and bracing of trusses and truss systems, see **ANSI/TPI1 Quality Criteria, DSB-89 and BCSI Building Component Safety Information** available from Truss Plate Institute, 218 N. Lee Street, Suite 312, Alexandria, VA 22314.

ENGINEERING BY TRENCO A MiTek Affiliate
818 Soundside Road
Edenton, NC 27932

LOAD CASE(S) Standard

1) Dead + Roof Live (balanced): Lumber Increase=1.15, Plate Increase=1.15
   Uniform Loads (plf)
   Vert: 1-4=-60, 4-10=-60, 2-11=-20
   Concentrated Loads (lb)
   Vert: 4=-66(F) 16=-24(F) 17=-24(F) 6=-66(F) 14=-24(F) 8=-66(F) 19=-60(F) 20=-57(F) 21=-57(F) 22=-66(F) 23=-66(F) 24=-66(F) 25=-66(F) 26=-66(F) 27=-66(F) 28=-66(F) 29=-66(F) 30=-66(F) 31=-66(F) 32=-66(F) 33=-66(F) 34=-66(F) 35=-66(F) 36=-33(F) 37=-33(F) 38=-34(F) 39=-24(F) 40=-24(F) 41=-24(F) 42=-24(F) 43=-24(F) 44=-24(F) 45=-24(F) 46=-24(F) 47=-24(F) 48=-24(F) 49=-24(F) 50=-24(F) 51=-24(F) 52=-24(F)

WARNING - Verify design parameters and READ NOTES ON THIS AND INCLUDED MITEK REFERENCE PAGE MII-7473 rev. 10/03/2015 BEFORE USE.
Design valid for use only with MiTek® connectors. This design is based only upon parameters shown, and is for an individual building component, not a truss system. Before use, the building designer must verify the applicability of design parameters and properly incorporate this design into the overall building design. Bracing indicated is to prevent buckling of individual truss web and/or chord members only. Additional temporary and permanent bracing is always required for stability and to prevent collapse with possible personal injury and property damage. For general guidance regarding the fabrication, storage, delivery, erection and bracing of trusses and truss systems, see **ANSI/TPI1 Quality Criteria, DSB-89 and BCSI Building Component Safety Information** available from Truss Plate Institute, 218 N. Lee Street, Suite 312, Alexandria, VA 22314.

ENGINEERING BY TRENCO A MiTek Affiliate
818 Soundside Road
Edenton, NC 27932

Job	Truss	Truss Type	Qty	Ply	240.3174.C
23412A	J1	JACK-OPEN	34	1	I40522816 Job Reference (optional)

84 Components (Dunn), Dunn, NC - 28334, 8.330 s Feb 13 2020 MiTek Industries, Inc. Fri Mar 6 11:40:04 2020 Page 1
ID:B_Q7f7Biu7XlherXjarx6dzmHHa-C?ednKtqEfbHg2jYPC8712AP5Jnq_9JGxm?kaEzdfA9

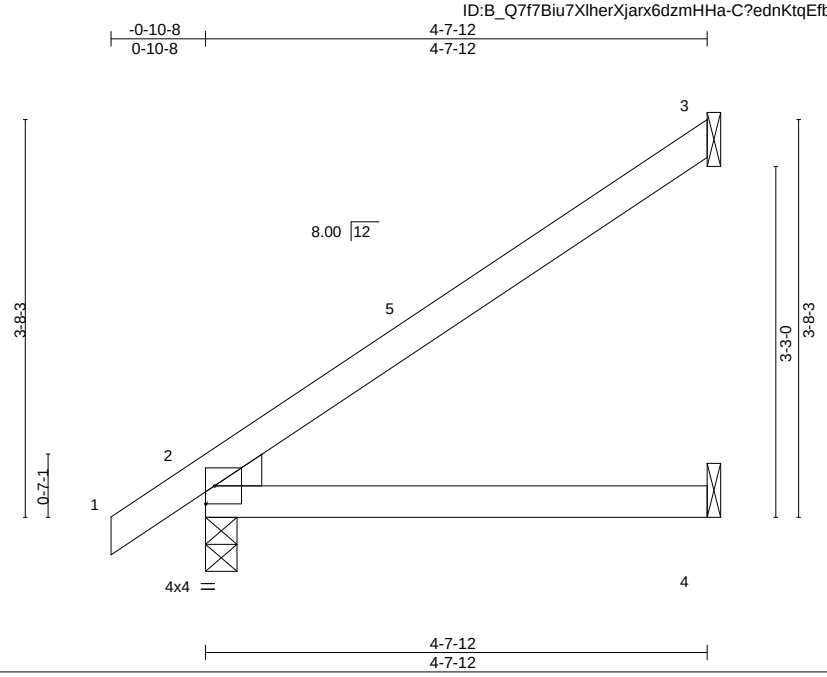

Plate Offsets (X,Y)-- [2:0-0-8,0-0-5], [2:0-4-8,0-0-11]

LOADING (psf)		SPACING-	2-0-0	CSI.		DEFL.	in	(loc)	l/defl	L/d	PLATES	GRIP
TCLL	20.0	Plate Grip DOL	1.15	TC	0.35	Vert(LL)	-0.02	2-4	>999	240	MT20	244/190
TCDL	10.0	Lumber DOL	1.15	BC	0.24	Vert(CT)	-0.05	2-4	>999	180		
BCLL	0.0 *	Rep Stress Incr	YES	WB	0.00	Horz(CT)	-0.00	3	n/a	n/a		
BCDL	10.0	Code IRC2015/TPI2014		Matrix-P							Weight: 18 lb	FT = 20%

LUMBER-
TOP CHORD 2x4 SP No.2
BOT CHORD 2x4 SP No.2
WEDGE
Left: 2x4 SP No.3

BRACING-
TOP CHORD Structural wood sheathing directly applied or 4-7-12 oc purlins.
BOT CHORD Rigid ceiling directly applied or 10-0-0 oc bracing.

REACTIONS. (size) 3=Mechanical, 2=0-3-8, 4=Mechanical
Max Horz 2=139(LC 12)
Max Uplift 3=-104(LC 12), 2=-9(LC 12)
Max Grav 3=140(LC 19), 2=246(LC 1), 4=89(LC 3)

FORCES. (lb) - Max. Comp./Max. Ten. - All forces 250 (lb) or less except when shown.

NOTES-
1) Wind: ASCE 7-10; Vult=130mph (3-second gust) Vasd=103mph; TCDL=6.0psf; BCDL=6.0psf; h=25ft; Cat. II; Exp B; Enclosed; MWFRS (envelope) gable end zone and C-C Exterior(2) -0-10-8 to 2-1-8, Interior(1) 2-1-8 to 4-7-0 zone;C-C for members and forces & MWFRS for reactions shown; Lumber DOL=1.60 plate grip DOL=1.60
2) This truss has been designed for a 10.0 psf bottom chord live load nonconcurrent with any other live loads.
3) * This truss has been designed for a live load of 20.0psf on the bottom chord in all areas where a rectangle 3-6-0 tall by 2-0-0 wide will fit between the bottom chord and any other members.
4) Refer to girder(s) for truss to truss connections.
5) Provide mechanical connection (by others) of truss to bearing plate capable of withstanding 100 lb uplift at joint(s) 2 except (jt=lb) 3=104.

March 6,2020

WARNING - Verify design parameters and READ NOTES ON THIS AND INCLUDED MITEK REFERENCE PAGE MII-7473 rev. 10/03/2015 BEFORE USE.
Design valid for use only with MiTek® connectors. This design is based only upon parameters shown, and is for an individual building component, not a truss system. Before use, the building designer must verify the applicability of design parameters and properly incorporate this design into the overall building design. Bracing indicated is to prevent buckling of individual truss web and/or chord members only. Additional temporary and permanent bracing is always required for stability and to prevent collapse with possible personal injury and property damage. For general guidance regarding the fabrication, storage, delivery, erection and bracing of trusses and truss systems, see **ANSI/TPI1 Quality Criteria, DSB-89 and BCSI Building Component Safety Information** available from Truss Plate Institute, 218 N. Lee Street, Suite 312, Alexandria, VA 22314.

ENGINEERING BY TRENCO A MiTek Affiliate
818 Soundside Road
Edenton, NC 27932

Job	Truss	Truss Type	Qty	Ply	240.3174.C
23412A	J2	JACK-OPEN	2	1	I40522817 Job Reference (optional)

84 Components (Dunn), Dunn, NC - 28334, 8.330 s Feb 13 2020 MiTek Industries, Inc. Fri Mar 6 11:40:05 2020 Page 1
ID:B_Q7f7Biu7XlherXjarx6dzmHHa-gBB?_guS?yj8HBIkywfMaGibwi7UjcZQ9QkH6gzdfA8

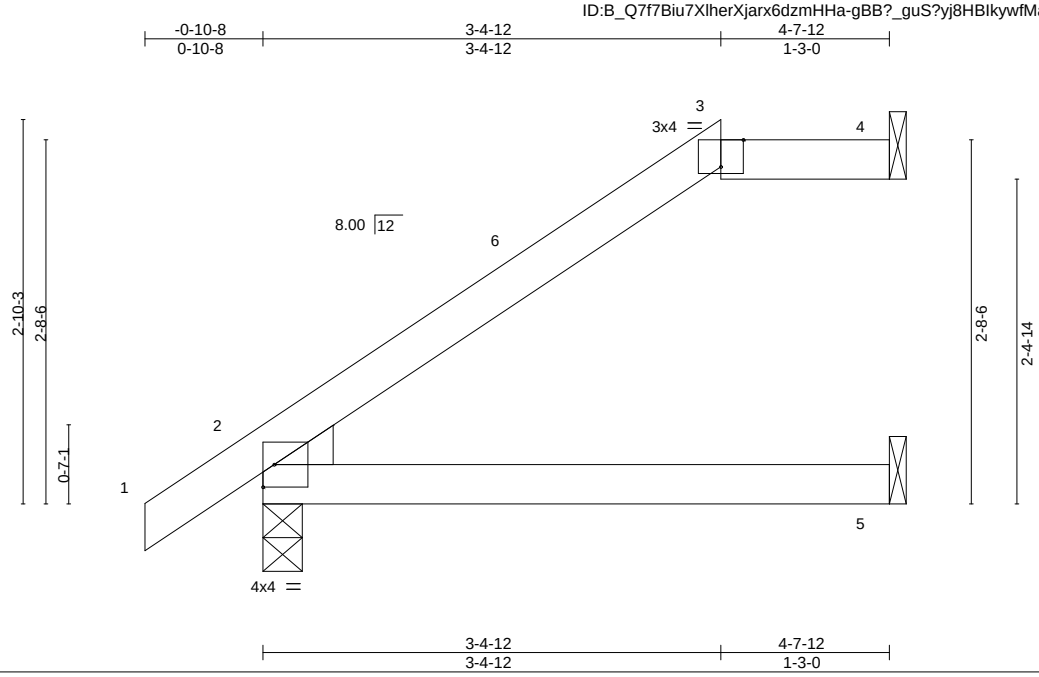

Plate Offsets (X,Y)-- [2:0-4-8,0-0-11], [2:0-0-8,0-0-5], [3:0-2-0,Edge]

LOADING (psf)		SPACING-	2-0-0	CSI.		DEFL.	in	(loc)	l/defl	L/d	PLATES	GRIP
TCLL	20.0	Plate Grip DOL	1.15	TC	0.28	Vert(LL)	-0.02	2-5	>999	240	MT20	244/190
TCDL	10.0	Lumber DOL	1.15	BC	0.21	Vert(CT)	-0.04	2-5	>999	180		
BCLL	0.0 *	Rep Stress Incr	YES	WB	0.00	Horz(CT)	0.04	4	n/a	n/a		
BCDL	10.0	Code IRC2015/TPI2014		Matrix-P							Weight: 17 lb	FT = 20%

LUMBER-
TOP CHORD 2x4 SP No.2
BOT CHORD 2x4 SP No.2
WEDGE
Left: 2x4 SP No.3

BRACING-
TOP CHORD Structural wood sheathing directly applied or 4-7-12 oc purlins, except
2-0-0 oc purlins: 3-4.
BOT CHORD Rigid ceiling directly applied or 10-0-0 oc bracing.

REACTIONS. (size) 4=Mechanical, 2=0-3-8, 5=Mechanical
Max Horz 2=104(LC 12)
Max Uplift 4=-50(LC 12), 2=-29(LC 12)
Max Grav 4=117(LC 1), 2=246(LC 1), 5=84(LC 3)

FORCES. (lb) - Max. Comp./Max. Ten. - All forces 250 (lb) or less except when shown.

NOTES-
1) Unbalanced roof live loads have been considered for this design.
2) Wind: ASCE 7-10; Vult=130mph (3-second gust) Vasd=103mph; TCDL=6.0psf; BCDL=6.0psf; h=25ft; Cat. II; Exp B; Enclosed; MWFRS (envelope) gable end zone and C-C Exterior(2) -0-10-8 to 2-1-8, Interior(1) 2-1-8 to 3-4-12, Exterior(2) 3-4-12 to 4-7-0 zone;C-C for members and forces & MWFRS for reactions shown; Lumber DOL=1.60 plate grip DOL=1.60
3) Provide adequate drainage to prevent water ponding.
4) This truss has been designed for a 10.0 psf bottom chord live load nonconcurrent with any other live loads.
5) * This truss has been designed for a live load of 20.0psf on the bottom chord in all areas where a rectangle 3-6-0 tall by 2-0-0 wide will fit between the bottom chord and any other members.
6) Refer to girder(s) for truss to truss connections.
7) Provide mechanical connection (by others) of truss to bearing plate capable of withstanding 100 lb uplift at joint(s) 4, 2.
8) Graphical purlin representation does not depict the size or the orientation of the purlin along the top and/or bottom chord.

March 6,2020

WARNING - Verify design parameters and READ NOTES ON THIS AND INCLUDED MITEK REFERENCE PAGE MII-7473 rev. 10/03/2015 BEFORE USE.
Design valid for use only with MiTek® connectors. This design is based only upon parameters shown, and is for an individual building component, not a truss system. Before use, the building designer must verify the applicability of design parameters and properly incorporate this design into the overall building design. Bracing indicated is to prevent buckling of individual truss web and/or chord members only. Additional temporary and permanent bracing is always required for stability and to prevent collapse with possible personal injury and property damage. For general guidance regarding the fabrication, storage, delivery, erection and bracing of trusses and truss systems, see **ANSI/TPI1 Quality Criteria, DSB-89 and BCSI Building Component Safety Information** available from Truss Plate Institute, 218 N. Lee Street, Suite 312, Alexandria, VA 22314.

ENGINEERING BY TRENCO A MiTek Affiliate
818 Soundside Road
Edenton, NC 27932

Job	Truss	Truss Type	Qty	Ply	240.3174.C
23412A	J3	JACK-OPEN	2	1	I40522818 Job Reference (optional)

84 Components (Dunn), Dunn, NC - 28334, 8.330 s Feb 13 2020 MiTek Industries, Inc. Fri Mar 6 11:40:05 2020 Page 1
ID:B_Q7f7Biu7XlherXjarx6dzmHHa-gBB?_guS?yj8HBIkywfMaGib?i7VjcZQ9QkH6gzdfA8

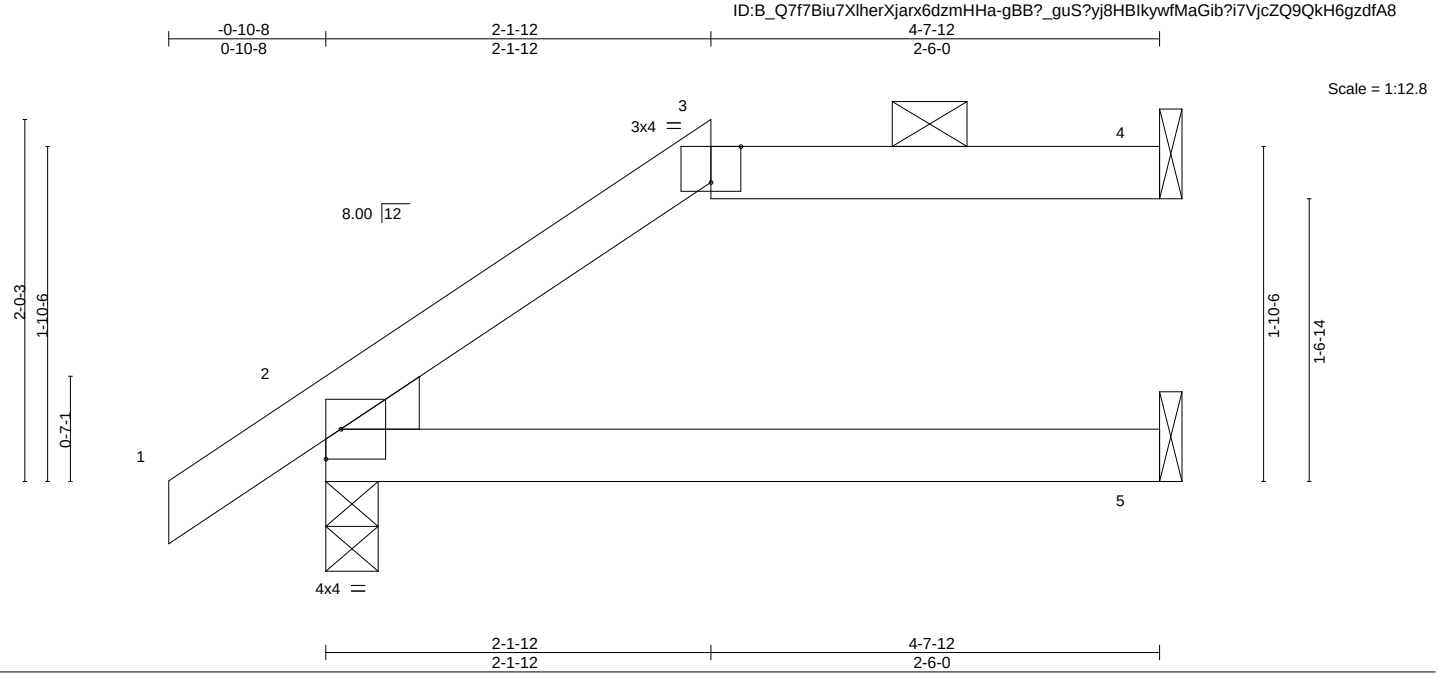

Plate Offsets (X,Y)-- [2:0-4-8,0-0-11], [2:0-0-8,0-0-5], [3:0-2-0,Edge]

LOADING (psf)		SPACING- 2-0-0		CSI.		DEFL.	in	(loc)	l/defl	L/d	PLATES	GRIP
TCLL	20.0	Plate Grip DOL	1.15	TC	0.28	Vert(LL)	-0.02	2-5	>999	240	MT20	244/190
TCDL	10.0	Lumber DOL	1.15	BC	0.21	Vert(CT)	-0.04	2-5	>999	180		
BCLL	0.0 *	Rep Stress Incr	YES	WB	0.00	Horz(CT)	0.04	4	n/a	n/a		
BCDL	10.0	Code IRC2015/TPI2014		Matrix-P							Weight: 17 lb	FT = 20%

LUMBER-
TOP CHORD 2x4 SP No.2
BOT CHORD 2x4 SP No.2
WEDGE
Left: 2x4 SP No.3

BRACING-
TOP CHORD Structural wood sheathing directly applied or 4-7-12 oc purlins, except
2-0-0 oc purlins: 3-4.
BOT CHORD Rigid ceiling directly applied or 10-0-0 oc bracing.

REACTIONS. (size) 4=Mechanical, 2=0-3-8, 5=Mechanical
Max Horz 2=72(LC 12)
Max Uplift 4=-47(LC 9), 2=-35(LC 12)
Max Grav 4=117(LC 1), 2=246(LC 1), 5=83(LC 3)

FORCES. (lb) - Max. Comp./Max. Ten. - All forces 250 (lb) or less except when shown.

NOTES-
1) Unbalanced roof live loads have been considered for this design.
2) Wind: ASCE 7-10; Vult=130mph (3-second gust) Vasd=103mph; TCDL=6.0psf; BCDL=6.0psf; h=25ft; Cat. II; Exp B; Enclosed; MWFRS (envelope) gable end zone and C-C Exterior(2) zone;C-C for members and forces & MWFRS for reactions shown; Lumber DOL=1.60 plate grip DOL=1.60
3) Provide adequate drainage to prevent water ponding.
4) This truss has been designed for a 10.0 psf bottom chord live load nonconcurrent with any other live loads.
5) * This truss has been designed for a live load of 20.0psf on the bottom chord in all areas where a rectangle 3-6-0 tall by 2-0-0 wide will fit between the bottom chord and any other members.
6) Refer to girder(s) for truss to truss connections.
7) Provide mechanical connection (by others) of truss to bearing plate capable of withstanding 100 lb uplift at joint(s) 4, 2.
8) Graphical purlin representation does not depict the size or the orientation of the purlin along the top and/or bottom chord.

March 6,2020

WARNING - Verify design parameters and READ NOTES ON THIS AND INCLUDED MITEK REFERENCE PAGE MII-7473 rev. 10/03/2015 BEFORE USE.
Design valid for use only with MiTek® connectors. This design is based only upon parameters shown, and is for an individual building component, not a truss system. Before use, the building designer must verify the applicability of design parameters and properly incorporate this design into the overall building design. Bracing indicated is to prevent buckling of individual truss web and/or chord members only. Additional temporary and permanent bracing is always required for stability and to prevent collapse with possible personal injury and property damage. For general guidance regarding the fabrication, storage, delivery, erection and bracing of trusses and truss systems, see **ANSI/TPI1 Quality Criteria, DSB-89 and BCSI Building Component Safety Information** available from Truss Plate Institute, 218 N. Lee Street, Suite 312, Alexandria, VA 22314.

ENGINEERING BY TRENCO A MiTek Affiliate
818 Soundside Road
Edenton, NC 27932

Job	Truss	Truss Type	Qty	Ply	240.3174.C
23412A	J4	JACK-OPEN	2	1	I40522819 Job Reference (optional)

84 Components (Dunn), Dunn, NC - 28334, 8.330 s Feb 13 2020 MiTek Industries, Inc. Fri Mar 6 11:40:06 2020 Page 1
ID:B_Q7f7Biu7XlherXjarx6dzmHHa-8NlNB0u4mGs?vLtwWdAb6TFll6TSS3pZO4Uqe6zdfA7

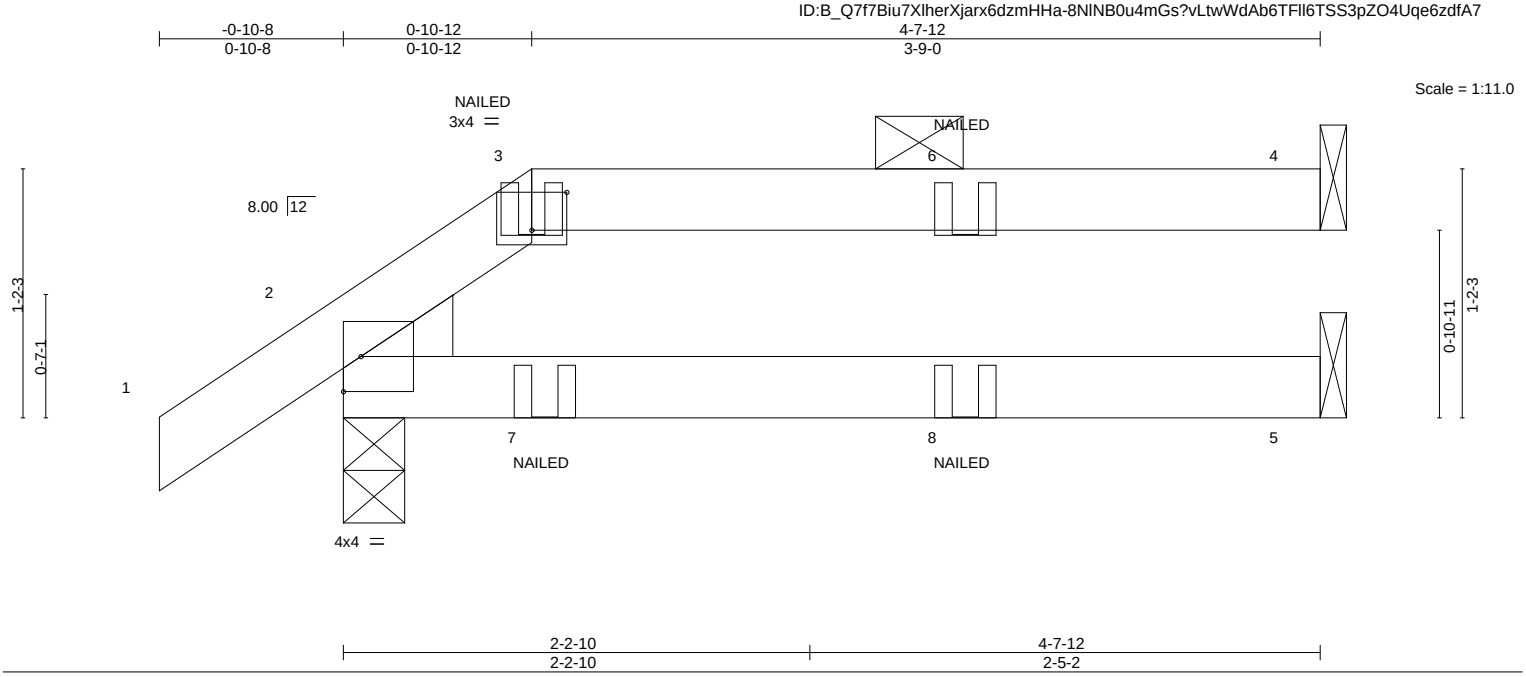

Plate Offsets (X,Y)-- [2:0-4-8,0-0-11], [2:0-0-8,0-0-5], [3:0-2-0,0-2-3]

LOADING (psf)		**SPACING-** 2-0-0		**CSI.**		**DEFL.**	in	(loc)	l/defl	L/d	**PLATES**	**GRIP**
TCLL	20.0	Plate Grip DOL	1.15	TC	0.34	Vert(LL)	-0.02	2-5	>999	240	MT20	244/190
TCDL	10.0	Lumber DOL	1.15	BC	0.23	Vert(CT)	-0.04	2-5	>999	180		
BCLL	0.0 *	Rep Stress Incr	NO	WB	0.00	Horz(CT)	0.03	4	n/a	n/a		
BCDL	10.0	Code IRC2015/TPI2014		Matrix-P							Weight: 17 lb	FT = 20%

LUMBER-
TOP CHORD 2x4 SP No.2
BOT CHORD 2x4 SP No.2
WEDGE
Left: 2x4 SP No.3

BRACING-
TOP CHORD Structural wood sheathing directly applied or 4-7-12 oc purlins, except
2-0-0 oc purlins: 3-4.
BOT CHORD Rigid ceiling directly applied or 10-0-0 oc bracing.

REACTIONS. (size) 4=Mechanical, 2=0-3-8, 5=Mechanical
Max Horz 2=45(LC 8)
Max Uplift 4=-50(LC 5), 2=-34(LC 8)
Max Grav 4=120(LC 20), 2=246(LC 1), 5=83(LC 3)

FORCES. (lb) - Max. Comp./Max. Ten. - All forces 250 (lb) or less except when shown.

NOTES-
1) Unbalanced roof live loads have been considered for this design.
2) Wind: ASCE 7-10; Vult=130mph (3-second gust) Vasd=103mph; TCDL=6.0psf; BCDL=6.0psf; h=25ft; Cat. II; Exp B; Enclosed; MWFRS (envelope) gable end zone; Lumber DOL=1.60 plate grip DOL=1.60
3) Provide adequate drainage to prevent water ponding.
4) This truss has been designed for a 10.0 psf bottom chord live load nonconcurrent with any other live loads.
5) * This truss has been designed for a live load of 20.0psf on the bottom chord in all areas where a rectangle 3-6-0 tall by 2-0-0 wide will fit between the bottom chord and any other members.
6) Refer to girder(s) for truss to truss connections.
7) Provide mechanical connection (by others) of truss to bearing plate capable of withstanding 100 lb uplift at joint(s) 4.
8) One RT7A USP connectors recommended to connect truss to bearing walls due to UPLIFT at jt(s) 2. This connection is for uplift only and does not consider lateral forces.
9) Graphical purlin representation does not depict the size or the orientation of the purlin along the top and/or bottom chord.
10) "NAILED" indicates 3-10d (0.148"x3") or 3-12d (0.148"x3.25") toe-nails per NDS guidlines.
11) In the LOAD CASE(S) section, loads applied to the face of the truss are noted as front (F) or back (B).

LOAD CASE(S) Standard
1) Dead + Roof Live (balanced): Lumber Increase=1.15, Plate Increase=1.15
Uniform Loads (plf)
Vert: 1-3=-60, 3-4=-60, 2-5=-20
Concentrated Loads (lb)
Vert: 7=-0(B)

March 6,2020

WARNING - Verify design parameters and READ NOTES ON THIS AND INCLUDED MITEK REFERENCE PAGE MII-7473 rev. 10/03/2015 BEFORE USE.
Design valid for use only with MiTek® connectors. This design is based only upon parameters shown, and is for an individual building component, not a truss system. Before use, the building designer must verify the applicability of design parameters and properly incorporate this design into the overall building design. Bracing indicated is to prevent buckling of individual truss web and/or chord members only. Additional temporary and permanent bracing is always required for stability and to prevent collapse with possible personal injury and property damage. For general guidance regarding the fabrication, storage, delivery, erection and bracing of trusses and truss systems, see **ANSI/TPI1 Quality Criteria, DSB-89 and BCSI Building Component Safety Information** available from Truss Plate Institute, 218 N. Lee Street, Suite 312, Alexandria, VA 22314.

ENGINEERING BY TRENCO A MiTek Affiliate
818 Soundside Road
Edenton, NC 27932

Job	Truss	Truss Type	Qty	Ply	240.3174.C
23412A	J5	JACK-OPEN	4	1	I40522820 Job Reference (optional)

84 Components (Dunn), Dunn, NC - 28334, 8.330 s Feb 13 2020 MiTek Industries, Inc. Fri Mar 6 11:40:07 2020 Page 1
ID:B_Q7f7Biu7XlherXjarx6dzmHHa-cZJlPMviXa_sXVS74Khqfho_nWslBW3jdkDOBYzdfA6

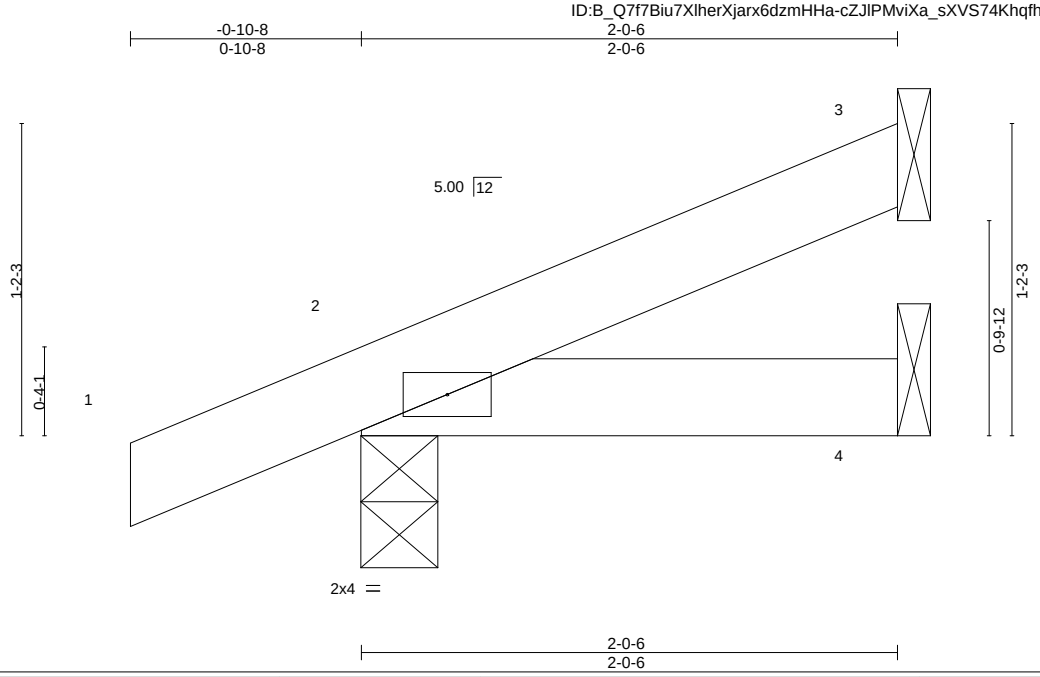

LOADING (psf)		SPACING- 2-0-0		CSI.		DEFL. in (loc) l/defl L/d		PLATES GRIP
TCLL	20.0	Plate Grip DOL	1.15	TC	0.07	Vert(LL) -0.00 2 >999 240		MT20 244/190
TCDL	10.0	Lumber DOL	1.15	BC	0.03	Vert(CT) -0.00 2-4 >999 180		
BCLL	0.0 *	Rep Stress Incr	YES	WB	0.00	Horz(CT) -0.00 3 n/a n/a		
BCDL	10.0	Code IRC2015/TPI2014		Matrix-P				Weight: 8 lb FT = 20%

LUMBER-
TOP CHORD 2x4 SP No.2
BOT CHORD 2x4 SP No.2

BRACING-
TOP CHORD Structural wood sheathing directly applied or 2-0-6 oc purlins.
BOT CHORD Rigid ceiling directly applied or 10-0-0 oc bracing.

REACTIONS. (size) 3=Mechanical, 2=0-3-8, 4=Mechanical
Max Horz 2=44(LC 12)
Max Uplift 3=-25(LC 12), 2=-37(LC 8)
Max Grav 3=38(LC 1), 2=151(LC 1), 4=36(LC 3)

FORCES. (lb) - Max. Comp./Max. Ten. - All forces 250 (lb) or less except when shown.

NOTES-
1) Wind: ASCE 7-10; Vult=130mph (3-second gust) Vasd=103mph; TCDL=6.0psf; BCDL=6.0psf; h=25ft; Cat. II; Exp B; Enclosed; MWFRS (envelope) gable end zone and C-C Exterior(2) zone;C-C for members and forces & MWFRS for reactions shown; Lumber DOL=1.60 plate grip DOL=1.60
2) This truss has been designed for a 10.0 psf bottom chord live load nonconcurrent with any other live loads.
3) * This truss has been designed for a live load of 20.0psf on the bottom chord in all areas where a rectangle 3-6-0 tall by 2-0-0 wide will fit between the bottom chord and any other members.
4) Refer to girder(s) for truss to truss connections.
5) Provide mechanical connection (by others) of truss to bearing plate capable of withstanding 100 lb uplift at joint(s) 3.
6) One RT7A USP connectors recommended to connect truss to bearing walls due to UPLIFT at jt(s) 2. This connection is for uplift only and does not consider lateral forces.

March 6,2020

WARNING - Verify design parameters and READ NOTES ON THIS AND INCLUDED MITEK REFERENCE PAGE MII-7473 rev. 10/03/2015 BEFORE USE.
Design valid for use only with MiTek® connectors. This design is based only upon parameters shown, and is for an individual building component, not a truss system. Before use, the building designer must verify the applicability of design parameters and properly incorporate this design into the overall building design. Bracing indicated is to prevent buckling of individual truss web and/or chord members only. Additional temporary and permanent bracing is always required for stability and to prevent collapse with possible personal injury and property damage. For general guidance regarding the fabrication, storage, delivery, erection and bracing of trusses and truss systems, see **ANSI/TPI1 Quality Criteria, DSB-89 and BCSI Building Component Safety Information** available from Truss Plate Institute, 218 N. Lee Street, Suite 312, Alexandria, VA 22314.

ENGINEERING BY TRENCO A MiTek Affiliate
818 Soundside Road
Edenton, NC 27932

Job	Truss	Truss Type	Qty	Ply	240.3174.C
23412A	JR2	HALF HIP	1	1	I40522821 Job Reference (optional)

84 Components (Dunn), Dunn, NC - 28334, 8.330 s Feb 13 2020 MiTek Industries, Inc. Fri Mar 6 11:40:07 2020 Page 1
ID:B_Q7f7Biu7XlherXjarx6dzmHHa-cZJlPMviXa_sXVS74Khqfho_AWsmBW3jdkDOBYzdfA6

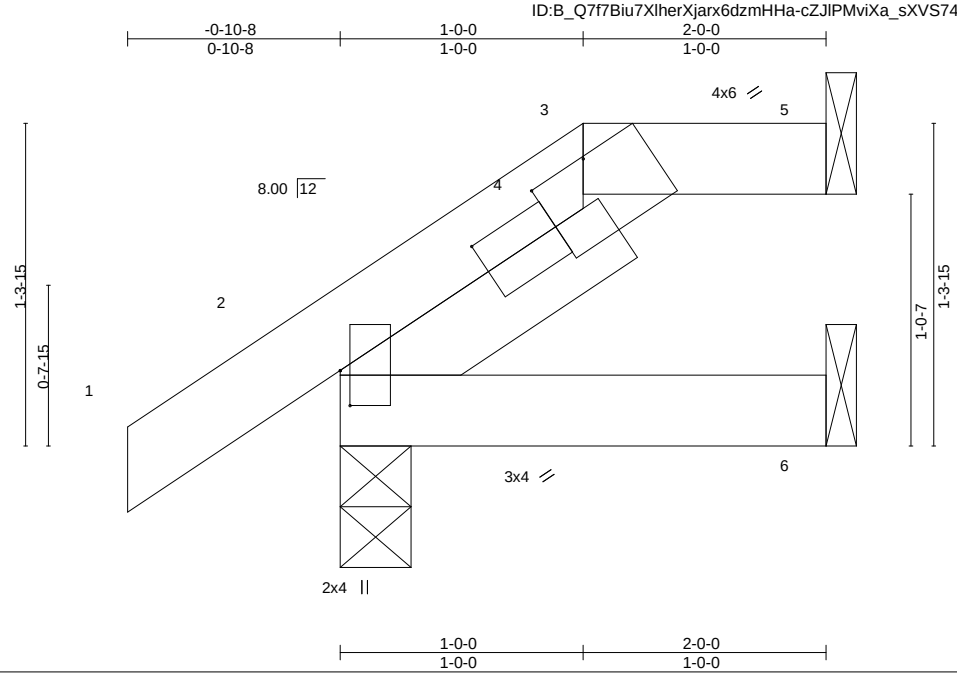

Plate Offsets (X,Y)-- [2:0-8-13,0-1-8], [2:0-1-12,0-0-8], [3:0-3-0,0-0-2]

LOADING (psf)		SPACING-	2-0-0	CSI.		DEFL.	in	(loc)	l/defl	L/d	PLATES	GRIP
TCLL	20.0	Plate Grip DOL	1.15	TC	0.11	Vert(LL)	-0.00	2	>999	240	MT20	244/190
TCDL	10.0	Lumber DOL	1.15	BC	0.03	Vert(CT)	-0.00	2-6	>999	180		
BCLL	0.0 *	Rep Stress Incr	YES	WB	0.00	Horz(CT)	0.00	5	n/a	n/a		
BCDL	10.0	Code IRC2015/TPI2014		Matrix-P							Weight: 10 lb	FT = 20%

LUMBER-
TOP CHORD 2x4 SP No.2
BOT CHORD 2x4 SP No.2
SLIDER Left 2x4 SP No.3 -x 1-3-7

BRACING-
TOP CHORD Structural wood sheathing directly applied or 2-0-0 oc purlins, except 2-0-0 oc purlins: 3-5.
BOT CHORD Rigid ceiling directly applied or 10-0-0 oc bracing.

REACTIONS. (size) 5=Mechanical, 2=0-3-8, 6=Mechanical
Max Horz 2=73(LC 12)
Max Uplift 5=-32(LC 9), 2=-35(LC 12)
Max Grav 5=69(LC 1), 2=196(LC 1), 6=36(LC 3)

FORCES. (lb) - Max. Comp./Max. Ten. - All forces 250 (lb) or less except when shown.

NOTES-
1) Unbalanced roof live loads have been considered for this design.
2) Wind: ASCE 7-10; Vult=130mph (3-second gust) Vasd=103mph; TCDL=6.0psf; BCDL=6.0psf; h=25ft; Cat. II; Exp B; Enclosed; MWFRS (envelope) gable end zone and C-C Exterior(2) zone;C-C for members and forces & MWFRS for reactions shown; Lumber DOL=1.60 plate grip DOL=1.60
3) Provide adequate drainage to prevent water ponding.
4) This truss has been designed for a 10.0 psf bottom chord live load nonconcurrent with any other live loads.
5) * This truss has been designed for a live load of 20.0psf on the bottom chord in all areas where a rectangle 3-6-0 tall by 2-0-0 wide will fit between the bottom chord and any other members.
6) Refer to girder(s) for truss to truss connections.
7) Provide mechanical connection (by others) of truss to bearing plate capable of withstanding 100 lb uplift at joint(s) 5.
8) One RT7A USP connectors recommended to connect truss to bearing walls due to UPLIFT at jt(s) 2. This connection is for uplift only and does not consider lateral forces.
9) Graphical purlin representation does not depict the size or the orientation of the purlin along the top and/or bottom chord.

March 6,2020

WARNING - Verify design parameters and READ NOTES ON THIS AND INCLUDED MITEK REFERENCE PAGE MII-7473 rev. 10/03/2015 BEFORE USE.
Design valid for use only with MiTek® connectors. This design is based only upon parameters shown, and is for an individual building component, not a truss system. Before use, the building designer must verify the applicability of design parameters and properly incorporate this design into the overall building design. Bracing indicated is to prevent buckling of individual truss web and/or chord members only. Additional temporary and permanent bracing is always required for stability and to prevent collapse with possible personal injury and property damage. For general guidance regarding the fabrication, storage, delivery, erection and bracing of trusses and truss systems, see **ANSI/TPI1 Quality Criteria, DSB-89 and BCSI Building Component Safety Information** available from Truss Plate Institute, 218 N. Lee Street, Suite 312, Alexandria, VA 22314.

ENGINEERING BY TRENCO A MiTek Affiliate
818 Soundside Road
Edenton, NC 27932

Job	Truss	Truss Type	Qty	Ply	240.3174.C
23412A	JR3	JACK-OPEN	1	1	I40522822 Job Reference (optional)

84 Components (Dunn), Dunn, NC - 28334, 8.330 s Feb 13 2020 MiTek Industries, Inc. Fri Mar 6 11:40:08 2020 Page 1
ID:B_Q7f7Biu7XlherXjarx6dzmHHa-4mt8ciwKIt6j8f0Je2D3CuK9GwCzwzJssOzxj?zdfA5

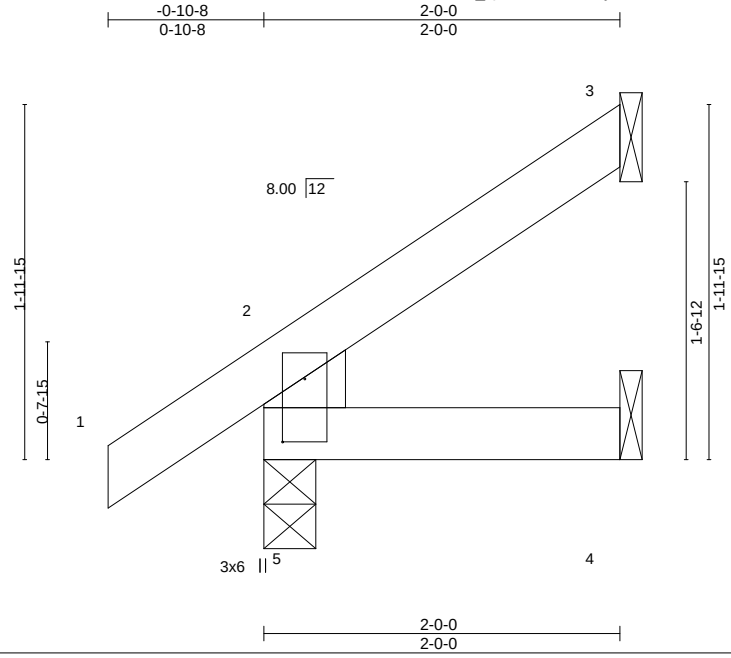

Plate Offsets (X,Y)-- [5:0-4-4,0-1-8]

LOADING (psf)		SPACING-	2-0-0	CSI.		DEFL.	in	(loc)	l/defl	L/d	PLATES	GRIP
TCLL	20.0	Plate Grip DOL	1.15	TC	0.08	Vert(LL)	-0.00	5	>999	240	MT20	244/190
TCDL	10.0	Lumber DOL	1.15	BC	0.04	Vert(CT)	-0.00	5	>999	180		
BCLL	0.0 *	Rep Stress Incr	YES	WB	0.00	Horz(CT)	0.00	3	n/a	n/a		
BCDL	10.0	Code IRC2015/TPI2014		Matrix-R							Weight: 9 lb	FT = 20%

LUMBER-
TOP CHORD 2x4 SP No.2
BOT CHORD 2x4 SP No.2
WEBS 2x6 SP No.2

BRACING-
TOP CHORD Structural wood sheathing directly applied or 2-0-0 oc purlins, except end verticals.
BOT CHORD Rigid ceiling directly applied or 10-0-0 oc bracing.

REACTIONS. (size) 5=0-3-8, 3=Mechanical, 4=Mechanical
Max Horz 5=70(LC 12)
Max Uplift 5=-14(LC 12), 3=-35(LC 12)
Max Grav 5=157(LC 1), 3=44(LC 19), 4=30(LC 3)

FORCES. (lb) - Max. Comp./Max. Ten. - All forces 250 (lb) or less except when shown.

NOTES-
1) Wind: ASCE 7-10; Vult=130mph (3-second gust) Vasd=103mph; TCDL=6.0psf; BCDL=6.0psf; h=25ft; Cat. II; Exp B; Enclosed; MWFRS (envelope) gable end zone and C-C Exterior(2) zone;C-C for members and forces & MWFRS for reactions shown; Lumber DOL=1.60 plate grip DOL=1.60
2) This truss has been designed for a 10.0 psf bottom chord live load nonconcurrent with any other live loads.
3) * This truss has been designed for a live load of 20.0psf on the bottom chord in all areas where a rectangle 3-6-0 tall by 2-0-0 wide will fit between the bottom chord and any other members.
4) Refer to girder(s) for truss to truss connections.
5) Provide mechanical connection (by others) of truss to bearing plate capable of withstanding 100 lb uplift at joint(s) 3.
6) One RT7A USP connectors recommended to connect truss to bearing walls due to UPLIFT at jt(s) 5. This connection is for uplift only and does not consider lateral forces.

March 6,2020

WARNING - Verify design parameters and READ NOTES ON THIS AND INCLUDED MITEK REFERENCE PAGE MII-7473 rev. 10/03/2015 BEFORE USE.
Design valid for use only with MiTek® connectors. This design is based only upon parameters shown, and is for an individual building component, not a truss system. Before use, the building designer must verify the applicability of design parameters and properly incorporate this design into the overall building design. Bracing indicated is to prevent buckling of individual truss web and/or chord members only. Additional temporary and permanent bracing is always required for stability and to prevent collapse with possible personal injury and property damage. For general guidance regarding the fabrication, storage, delivery, erection and bracing of trusses and truss systems, see **ANSI/TPI1 Quality Criteria, DSB-89 and BCSI Building Component Safety Information** available from Truss Plate Institute, 218 N. Lee Street, Suite 312, Alexandria, VA 22314.

ENGINEERING BY TRENCO A MiTek Affiliate
818 Soundside Road
Edenton, NC 27932

Job	Truss	Truss Type	Qty	Ply	240.3174.C
23412A	M1	MONOPITCH	5	1	I40522823 Job Reference (optional)

84 Components (Dunn), Dunn, NC - 28334, 8.330 s Feb 13 2020 MiTek Industries, Inc. Fri Mar 6 11:40:09 2020 Page 1
ID:B_Q7f7Biu7XlherXjarx6dzmHHa-ZyRWq2xy3BEampbVBlklk6tDtKT?fQZ?42iVFRzdfA4

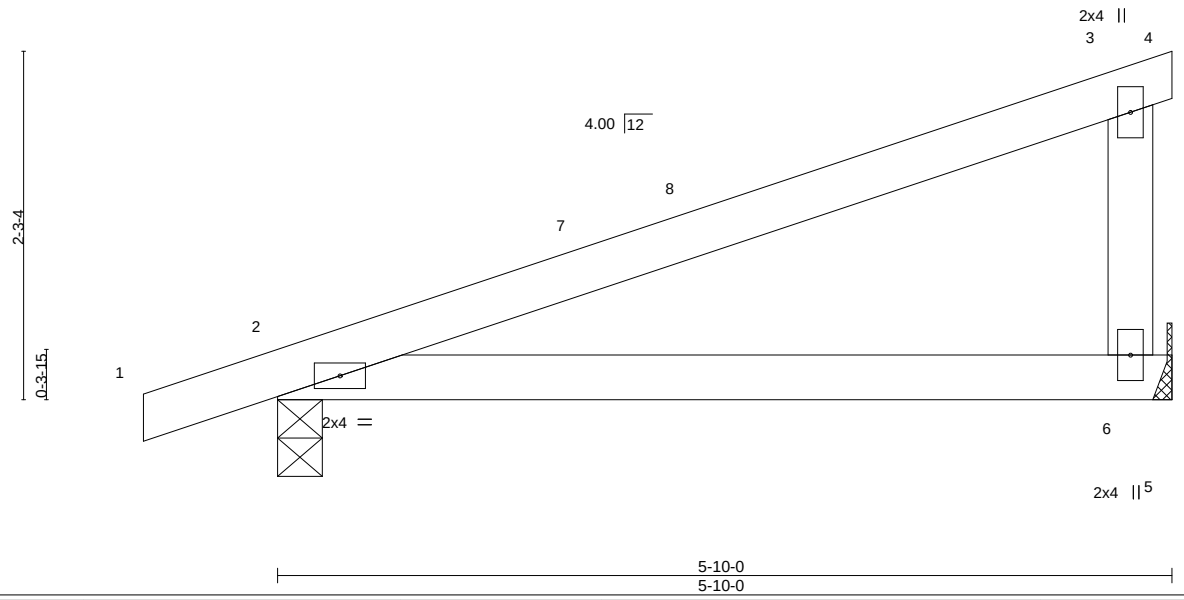

LOADING (psf)		SPACING- 2-0-0		CSI.		DEFL. in (loc) l/defl L/d		PLATES GRIP
TCLL	20.0	Plate Grip DOL	1.15	TC	0.54	Vert(LL) -0.05 2-6 >999 240		MT20 244/190
TCDL	10.0	Lumber DOL	1.15	BC	0.37	Vert(CT) -0.10 2-6 >633 180		
BCLL	0.0 *	Rep Stress Incr	YES	WB	0.00	Horz(CT) 0.00 n/a n/a		
BCDL	10.0	Code IRC2015/TPI2014		Matrix-P				Weight: 22 lb FT = 20%

LUMBER-
TOP CHORD 2x4 SP No.2
BOT CHORD 2x4 SP No.2
WEBS 2x4 SP No.3

BRACING-
TOP CHORD Structural wood sheathing directly applied or 5-10-0 oc purlins, except end verticals.
BOT CHORD Rigid ceiling directly applied or 10-0-0 oc bracing.

REACTIONS. (size) 6=Mechanical, 2=0-3-8
Max Horz 2=89(LC 8)
Max Uplift 6=-54(LC 12), 2=-70(LC 8)
Max Grav 6=222(LC 1), 2=283(LC 1)

FORCES. (lb) - Max. Comp./Max. Ten. - All forces 250 (lb) or less except when shown.

NOTES-
1) Wind: ASCE 7-10; Vult=130mph (3-second gust) Vasd=103mph; TCDL=6.0psf; BCDL=6.0psf; h=25ft; Cat. II; Exp B; Enclosed; MWFRS (envelope) gable end zone and C-C Exterior(2) -0-10-8 to 2-1-8, Interior(1) 2-1-8 to 5-10-0 zone;C-C for members and forces & MWFRS for reactions shown; Lumber DOL=1.60 plate grip DOL=1.60
2) This truss has been designed for a 10.0 psf bottom chord live load nonconcurrent with any other live loads.
3) * This truss has been designed for a live load of 20.0psf on the bottom chord in all areas where a rectangle 3-6-0 tall by 2-0-0 wide will fit between the bottom chord and any other members.
4) Refer to girder(s) for truss to truss connections.
5) Provide mechanical connection (by others) of truss to bearing plate capable of withstanding 100 lb uplift at joint(s) 6.
6) One RT7A USP connectors recommended to connect truss to bearing walls due to UPLIFT at jt(s) 2. This connection is for uplift only and does not consider lateral forces.

March 6,2020

WARNING - Verify design parameters and READ NOTES ON THIS AND INCLUDED MITEK REFERENCE PAGE MII-7473 rev. 10/03/2015 BEFORE USE.
Design valid for use only with MiTek® connectors. This design is based only upon parameters shown, and is for an individual building component, not a truss system. Before use, the building designer must verify the applicability of design parameters and properly incorporate this design into the overall building design. Bracing indicated is to prevent buckling of individual truss web and/or chord members only. Additional temporary and permanent bracing is always required for stability and to prevent collapse with possible personal injury and property damage. For general guidance regarding the fabrication, storage, delivery, erection and bracing of trusses and truss systems, see **ANSI/TPI1 Quality Criteria, DSB-89 and BCSI Building Component Safety Information** available from Truss Plate Institute, 218 N. Lee Street, Suite 312, Alexandria, VA 22314.

ENGINEERING BY TRENCO A MiTek Affiliate
818 Soundside Road
Edenton, NC 27932

Job	Truss	Truss Type	Qty	Ply	240.3174.C
23412A	M1F	ROOF SPECIAL	1	1	I40522824 Job Reference (optional)

84 Components, Dunn, NC 28334

8.330 s Jan 22 2020 MiTek Industries, Inc. Fri Mar 6 13:15:11 2020 Page 1
ID:B_Q7f7Biu7XlherXjarx6dzmHHa-?1UPJm_cD0?WSrgjO?IBM21YLqTceFUIF9xCOxzddn_

-0-10-8 | 5-0-0 | 5-10-0 | 6-10-0
0-10-8 | 5-0-0 | 0-10-0 | 1-0-0

Scale = 1:14.7

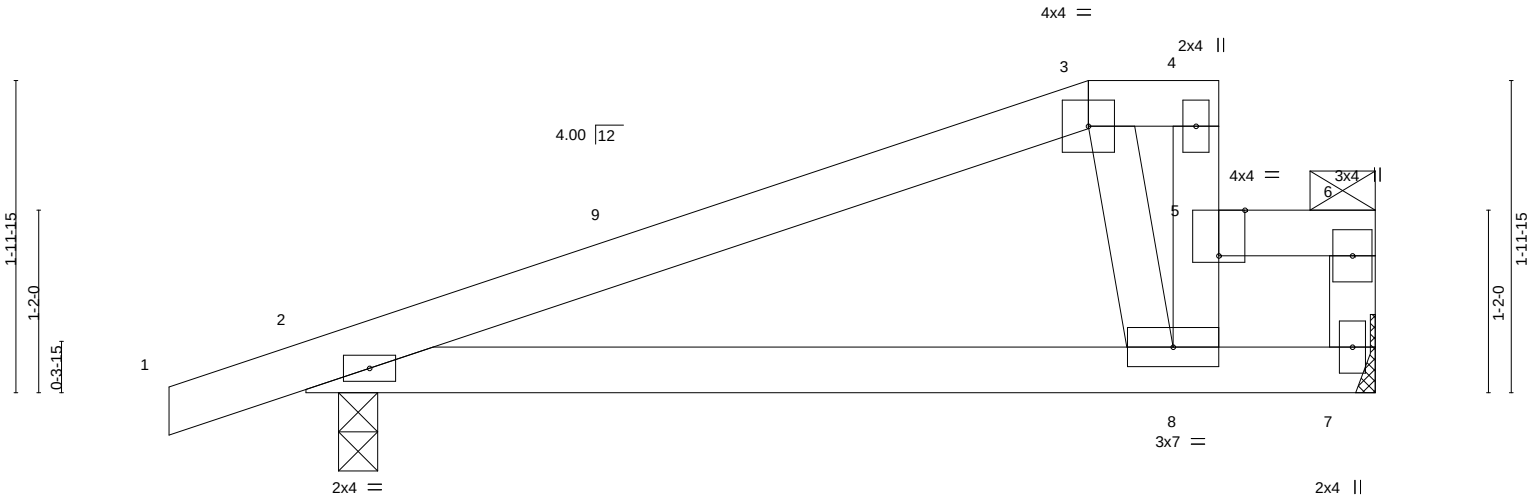

0-2-8 | 5-10-0 | 6-10-0
0-2-8 | 5-7-8 | 1-0-0

Plate Offsets (X,Y)-- [5:0-2-0,Edge]

LOADING (psf)		SPACING- 2-0-0		CSI.		DEFL. in (loc) l/defl L/d		PLATES GRIP
TCLL	20.0	Plate Grip DOL	1.15	TC	0.96	Vert(LL) -0.03 2-8 >999 240		MT20 244/190
TCDL	10.0	Lumber DOL	1.15	BC	0.65	Vert(TL) -0.09 2-8 >849 180		
BCLL	0.0 *	Rep Stress Incr	NO	WB	0.04	Horz(TL) 0.00 7 n/a n/a		
BCDL	10.0	Code IBC2006/TPI2002		Matrix-S				Weight: 27 lb FT = 20%

LUMBER-
TOP CHORD 2x4 SP No.2
BOT CHORD 2x4 SP No.2
WEBS 2x4 SP No.3

BRACING-
TOP CHORD Structural wood sheathing directly applied or 6-0-0 oc purlins, except end verticals, and 2-0-0 oc purlins (6-0-0 max.): 3-4, 5-8, 5-6.
BOT CHORD Rigid ceiling directly applied or 10-0-0 oc bracing.

REACTIONS. (lb/size) 7=478/Mechanical, 2=362/0-3-0 (min. 0-1-8)
Max Horz 2=114(LC 6)
Max Uplift 7=-173(LC 5), 2=-137(LC 9)

FORCES. (lb) - Max. Comp./Max. Ten. - All forces 250 (lb) or less except when shown.
TOP CHORD 2-9=-391/179, 3-9=-344/190, 3-4=-294/173, 6-7=-318/189
BOT CHORD 2-8=-254/325

NOTES-
1) Unbalanced roof live loads have been considered for this design.
2) Wind: ASCE 7-05; 130mph; TCDL=6.0psf; BCDL=6.0psf; h=25ft; B=45ft; L=24ft; eave=4ft; Cat. II; Exp B; Enclosed; MWFRS (all heights) and C-C Exterior(2) -0-10-8 to 2-1-8, Interior(1) 2-1-8 to 6-8-4 zone; cantilever left and right exposed ; end vertical left and right exposed;C-C for members and forces & MWFRS for reactions shown; Lumber DOL=1.60 plate grip DOL=1.60
3) Provide adequate drainage to prevent water ponding.
4) This truss has been designed for a 10.0 psf bottom chord live load nonconcurrent with any other live loads.
5) * This truss has been designed for a live load of 20.0psf on the bottom chord in all areas where a rectangle 3-6-0 tall by 2-0-0 wide will fit between the bottom chord and any other members.
6) Refer to girder(s) for truss to truss connections.
7) Provide mechanical connection (by others) of truss to bearing plate capable of withstanding 173 lb uplift at joint 7 and 137 lb uplift at joint 2.
8) This truss is designed in accordance with the 2006 International Building Code section 2306.1 and referenced standard ANSI/TPI 1.
9) Graphical purlin representation does not depict the size or the orientation of the purlin along the top and/or bottom chord.
10) Hanger(s) or other connection device(s) shall be provided sufficient to support concentrated load(s) . The design/selection of such connection device(s) is the responsibility of others.
11) In the LOAD CASE(S) section, loads applied to the face of the truss are noted as front (F) or back (B).

LOAD CASE(S) Standard
1) Dead + Roof Live (balanced) + Uninhab. Attic Storage + Attic Floor: Lumber Increase=1.15, Plate Increase=1.15
Uniform Loads (plf)
Vert: 1-3=-60, 3-4=-60, 5-6=-115(F=-55), 2-7=-20
Concentrated Loads (lb)
Vert: 5=-200(F)

March 6,2020

WARNING - Verify design parameters and READ NOTES ON THIS AND INCLUDED MITEK REFERENCE PAGE MII-7473 rev. 10/03/2015 BEFORE USE.
Design valid for use only with MiTek® connectors. This design is based only upon parameters shown, and is for an individual building component, not a truss system. Before use, the building designer must verify the applicability of design parameters and properly incorporate this design into the overall building design. Bracing indicated is to prevent buckling of individual truss web and/or chord members only. Additional temporary and permanent bracing is always required for stability and to prevent collapse with possible personal injury and property damage. For general guidance regarding the fabrication, storage, delivery, erection and bracing of trusses and truss systems, see **ANSI/TPI1 Quality Criteria, DSB-89 and BCSI Building Component Safety Information** available from Truss Plate Institute, 218 N. Lee Street, Suite 312, Alexandria, VA 22314.

ENGINEERING BY TRENCO A MiTek Affiliate
818 Soundside Road
Edenton, NC 27932

Job	Truss	Truss Type	Qty	Ply	240.3174.C
23412A	M2	HALF HIP	5	1	I40522825 Job Reference (optional)

84 Components (Dunn), Dunn, NC - 28334, 8.330 s Feb 13 2020 MiTek Industries, Inc. Fri Mar 6 11:40:10 2020 Page 1
ID:B_Q7f7Biu7XlherXjarx6dzmHHa-18?u1OxbpVMROzAilTFXHJQNjjqbOqW9JiS2ntzdfA3

-0-10-8 | 4-4-0 | 5-8-8
0-10-8 | 4-4-0 | 1-4-8

Scale = 1:13.2

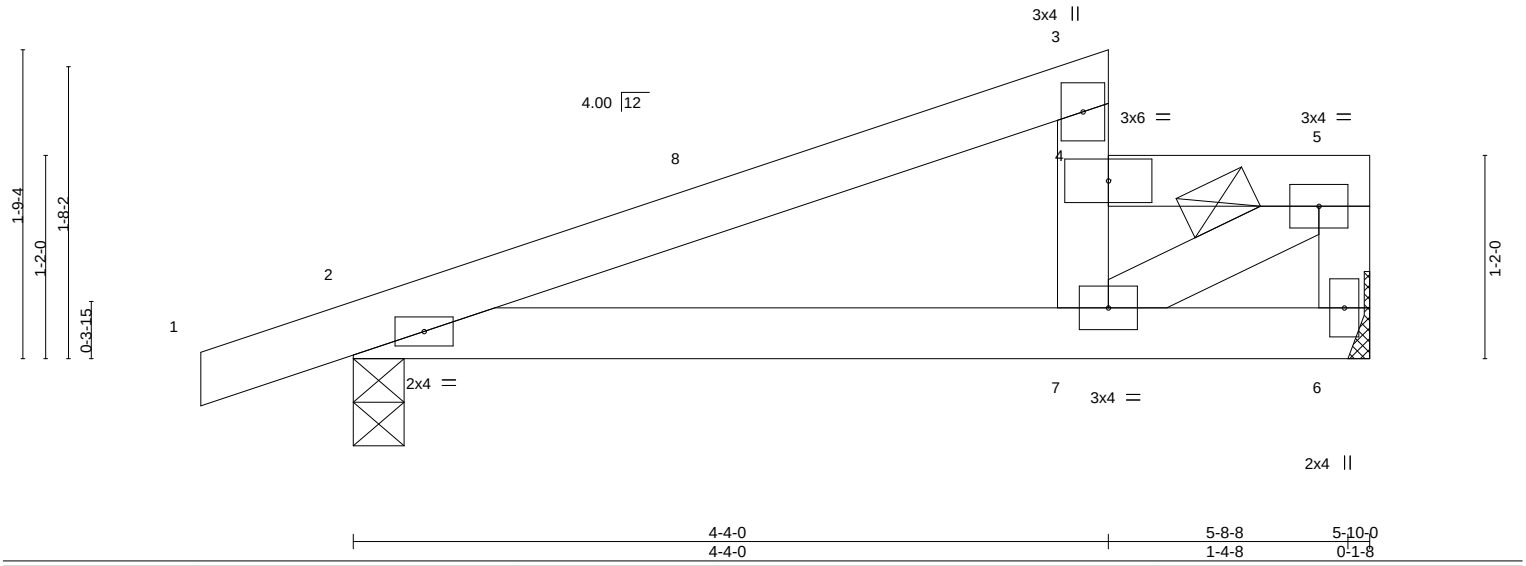

LOADING (psf)			SPACING- 2-0-0		CSI.		DEFL.	in	(loc)	l/defl	L/d	PLATES	GRIP
TCLL	20.0		Plate Grip DOL	1.15	TC	0.60	Vert(LL)	-0.01	2-7	>999	240	MT20	244/190
TCDL	10.0		Lumber DOL	1.15	BC	0.22	Vert(CT)	-0.03	2-7	>999	180		
BCLL	0.0	*	Rep Stress Incr	NO	WB	0.21	Horz(CT)	0.00	6	n/a	n/a		
BCDL	10.0		Code IRC2015/TPI2014		Matrix-S							Weight: 24 lb	FT = 20%

LUMBER-
TOP CHORD 2x4 SP No.2
BOT CHORD 2x4 SP No.2
WEBS 2x4 SP No.3

BRACING-
TOP CHORD Structural wood sheathing directly applied or 5-8-8 oc purlins, except end verticals, and 2-0-0 oc purlins: 4-7, 4-5.
BOT CHORD Rigid ceiling directly applied or 10-0-0 oc bracing.

REACTIONS. (size) 6=Mechanical, 2=0-3-8
Max Horz 2=88(LC 12)
Max Uplift 6=-48(LC 9), 2=-84(LC 8)
Max Grav 6=426(LC 2), 2=345(LC 1)

FORCES. (lb) - Max. Comp./Max. Ten. - All forces 250 (lb) or less except when shown.
TOP CHORD 2-3=-432/126, 4-5=-485/215, 5-6=-404/163
BOT CHORD 2-7=-176/371
WEBS 5-7=-227/508

NOTES-
1) Unbalanced roof live loads have been considered for this design.
2) Wind: ASCE 7-10; Vult=130mph (3-second gust) Vasd=103mph; TCDL=6.0psf; BCDL=6.0psf; h=25ft; Cat. II; Exp B; Enclosed; MWFRS (envelope) gable end zone and C-C Exterior(2) -0-10-8 to 2-1-8, Interior(1) 2-1-8 to 5-8-4 zone;C-C for members and forces & MWFRS for reactions shown; Lumber DOL=1.60 plate grip DOL=1.60
3) Provide adequate drainage to prevent water ponding.
4) This truss has been designed for a 10.0 psf bottom chord live load nonconcurrent with any other live loads.
5) * This truss has been designed for a live load of 20.0psf on the bottom chord in all areas where a rectangle 3-6-0 tall by 2-0-0 wide will fit between the bottom chord and any other members.
6) Refer to girder(s) for truss to truss connections.
7) Provide mechanical connection (by others) of truss to bearing plate capable of withstanding 100 lb uplift at joint(s) 6.
8) One RT7A USP connectors recommended to connect truss to bearing walls due to UPLIFT at jt(s) 2. This connection is for uplift only and does not consider lateral forces.
9) Graphical purlin representation does not depict the size or the orientation of the purlin along the top and/or bottom chord.
10) Hanger(s) or other connection device(s) shall be provided sufficient to support concentrated load(s) . The design/selection of such connection device(s) is the responsibility of others.
11) In the LOAD CASE(S) section, loads applied to the face of the truss are noted as front (F) or back (B).

LOAD CASE(S) Standard
1) Dead + Roof Live (balanced): Lumber Increase=1.15, Plate Increase=1.15
Uniform Loads (plf)
Vert: 1-3=-60, 4-5=-70(F=-10), 2-6=-20
Concentrated Loads (lb)
Vert: 4=-200(F)

March 6,2020

WARNING - Verify design parameters and READ NOTES ON THIS AND INCLUDED MITEK REFERENCE PAGE MII-7473 rev. 10/03/2015 BEFORE USE.
Design valid for use only with MiTek® connectors. This design is based only upon parameters shown, and is for an individual building component, not a truss system. Before use, the building designer must verify the applicability of design parameters and properly incorporate this design into the overall building design. Bracing indicated is to prevent buckling of individual truss web and/or chord members only. Additional temporary and permanent bracing is always required for stability and to prevent collapse with possible personal injury and property damage. For general guidance regarding the fabrication, storage, delivery, erection and bracing of trusses and truss systems, see **ANSI/TPI1 Quality Criteria, DSB-89 and BCSI Building Component Safety Information** available from Truss Plate Institute, 218 N. Lee Street, Suite 312, Alexandria, VA 22314.

ENGINEERING BY TRENCO A MiTek Affiliate
818 Soundside Road
Edenton, NC 27932

Job	Truss	Truss Type	Qty	Ply	240.3174.C
23412A	M2E	HALF HIP SUPPORTED	1	1	I40522826 Job Reference (optional)

84 Components (Dunn), Dunn, NC - 28334, 8.330 s Feb 13 2020 MiTek Industries, Inc. Fri Mar 6 11:40:10 2020 Page 1
ID:B_Q7f7Biu7XlherXjarx6dzmHHa-18?u1OxbpVMROzAilTFXHJQVcjtKOty9JiS2ntzdfA3

-0-10-8 | 2-4-0 | 4-4-0 | 5-8-8
0-10-8 | 2-4-0 | 2-0-0 | 1-4-8

Scale = 1:13.2

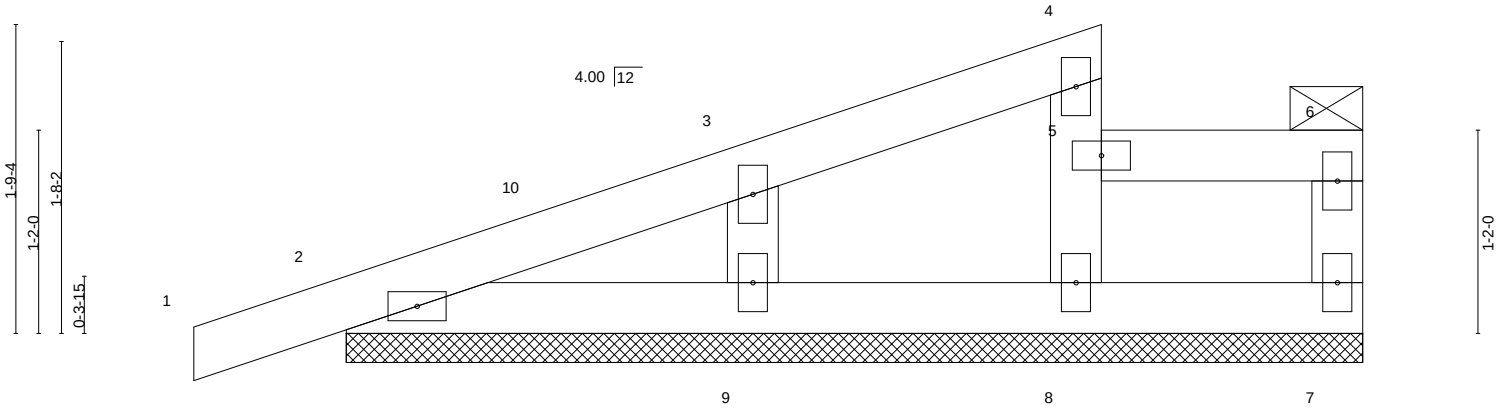

2-4-0 | 4-4-0 | 5-8-8
2-4-0 | 2-0-0 | 1-4-8

LOADING (psf)		SPACING- 2-0-0		CSI.		DEFL. in (loc) l/defl L/d		PLATES GRIP
TCLL	20.0	Plate Grip DOL	1.15	TC	0.09	Vert(LL) -0.00 1 n/r 120		MT20 244/190
TCDL	10.0	Lumber DOL	1.15	BC	0.04	Vert(CT) 0.00 1 n/r 120		
BCLL	0.0 *	Rep Stress Incr	NO	WB	0.05	Horz(CT) -0.00 7 n/a n/a		
BCDL	10.0	Code IRC2015/TPI2014		Matrix-S				Weight: 23 lb FT = 20%

LUMBER-
TOP CHORD 2x4 SP No.2
BOT CHORD 2x4 SP No.2
WEBS 2x4 SP No.3

BRACING-
TOP CHORD Structural wood sheathing directly applied or 5-8-8 oc purlins, except end verticals, and 2-0-0 oc purlins: 5-8, 5-6.
BOT CHORD Rigid ceiling directly applied or 6-0-0 oc bracing.

REACTIONS. All bearings 5-10-0.
(lb) - Max Horz 2=88(LC 12)
Max Uplift All uplift 100 lb or less at joint(s) 8, 7, 2, 9
Max Grav All reactions 250 lb or less at joint(s) 7, 2, 9 except 8=374(LC 19)

FORCES. (lb) - Max. Comp./Max. Ten. - All forces 250 (lb) or less except when shown.
TOP CHORD 5-8=-342/279

NOTES-
1) Unbalanced roof live loads have been considered for this design.
2) Wind: ASCE 7-10; Vult=130mph (3-second gust) Vasd=103mph; TCDL=6.0psf; BCDL=6.0psf; h=25ft; Cat. II; Exp B; Enclosed; MWFRS (envelope) gable end zone and C-C Corner(3) -0-10-8 to 2-4-0, Exterior(2) 2-4-0 to 5-8-4 zone;C-C for members and forces & MWFRS for reactions shown; Lumber DOL=1.60 plate grip DOL=1.60
3) Truss designed for wind loads in the plane of the truss only. For studs exposed to wind (normal to the face), see Standard Industry Gable End Details as applicable, or consult qualified building designer as per ANSI/TPI 1.
4) Provide adequate drainage to prevent water ponding.
5) All plates are 2x4 MT20 unless otherwise indicated.
6) Gable requires continuous bottom chord bearing.
7) Gable studs spaced at 2-0-0 oc.
8) This truss has been designed for a 10.0 psf bottom chord live load nonconcurrent with any other live loads.
9) * This truss has been designed for a live load of 20.0psf on the bottom chord in all areas where a rectangle 3-6-0 tall by 2-0-0 wide will fit between the bottom chord and any other members.
10) One RT7A USP connectors recommended to connect truss to bearing walls due to UPLIFT at jt(s) 8, 7, 2, and 9. This connection is for uplift only and does not consider lateral forces.
11) Graphical purlin representation does not depict the size or the orientation of the purlin along the top and/or bottom chord.
12) Hanger(s) or other connection device(s) shall be provided sufficient to support concentrated load(s) . The design/selection of such connection device(s) is the responsibility of others.
13) In the LOAD CASE(S) section, loads applied to the face of the truss are noted as front (F) or back (B).

LOAD CASE(S) Standard
1) Dead + Roof Live (balanced): Lumber Increase=1.15, Plate Increase=1.15
Uniform Loads (plf)
Vert: 1-4=-60, 5-6=-70(F=-10), 2-7=-20
Concentrated Loads (lb)
Vert: 5=-200(F)

March 6,2020

WARNING - Verify design parameters and READ NOTES ON THIS AND INCLUDED MITEK REFERENCE PAGE MII-7473 rev. 10/03/2015 BEFORE USE.
Design valid for use only with MiTek® connectors. This design is based only upon parameters shown, and is for an individual building component, not a truss system. Before use, the building designer must verify the applicability of design parameters and properly incorporate this design into the overall building design. Bracing indicated is to prevent buckling of individual truss web and/or chord members only. Additional temporary and permanent bracing is always required for stability and to prevent collapse with possible personal injury and property damage. For general guidance regarding the fabrication, storage, delivery, erection and bracing of trusses and truss systems, see **ANSI/TPI1 Quality Criteria, DSB-89 and BCSI Building Component Safety Information** available from Truss Plate Institute, 218 N. Lee Street, Suite 312, Alexandria, VA 22314.

ENGINEERING BY TRENCO A MiTek Affiliate
818 Soundside Road
Edenton, NC 27932

Job	Truss	Truss Type	Qty	Ply	240.3174.C
23412A	M3	HALF HIP	4	1	I40522827 Job Reference (optional)

84 Components, Dunn, NC 28334

8.330 s Jan 22 2020 MiTek Industries, Inc. Fri Mar 6 13:15:52 2020 Page 1
ID:B_Q7f7Biu7XlherXjarx6dzmHHa-lwTvwoUKac9it9JbI6XpXhEeeMScloIKh2NtJ3zddmL

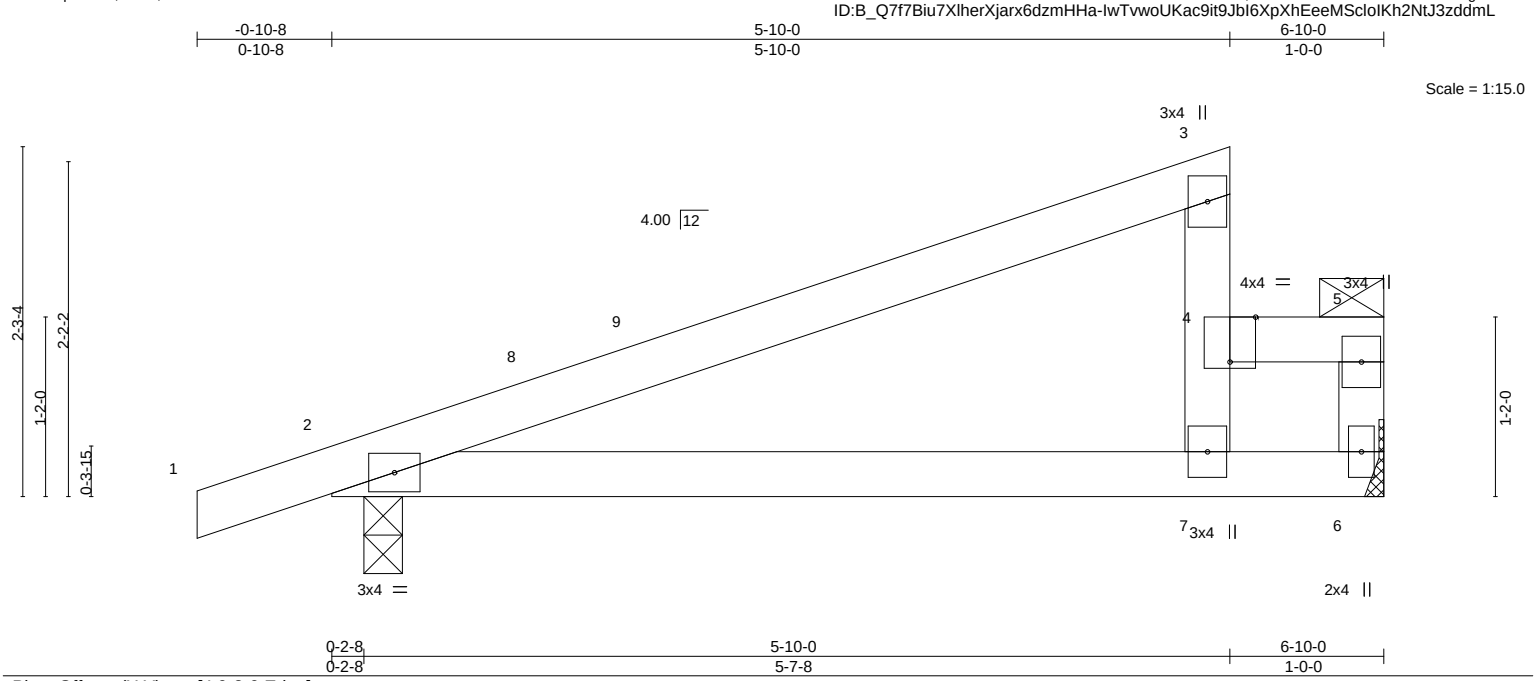

Plate Offsets (X,Y)-- [4:0-2-0,Edge]

LOADING (psf)		SPACING- 2-0-0		CSI.		DEFL. in (loc) l/defl L/d		PLATES GRIP
TCLL	20.0	Plate Grip DOL	1.15	TC	0.60	Vert(LL) 0.04 2-7 >999 240		MT20 244/190
TCDL	10.0	Lumber DOL	1.15	BC	0.75	Vert(TL) -0.10 2-7 >797 180		
BCLL	0.0 *	Rep Stress Incr	NO	WB	0.00	Horz(TL) 0.00 6 n/a n/a		
BCDL	10.0	Code IBC2006/TPI2002		Matrix-R				Weight: 26 lb FT = 20%

LUMBER-
TOP CHORD 2x4 SP No.2
BOT CHORD 2x4 SP No.2
WEBS 2x4 SP No.2 *Except*
5-6: 2x4 SP No.3

BRACING-
TOP CHORD Structural wood sheathing directly applied or 6-0-0 oc purlins, except end verticals, and 2-0-0 oc purlins (6-0-0 max.): 4-7, 4-5.
BOT CHORD Rigid ceiling directly applied or 10-0-0 oc bracing.

REACTIONS. (lb/size) 6=478/Mechanical, 2=362/0-3-0 (min. 0-1-8)
Max Horz 2=129(LC 9)
Max Uplift 6=-165(LC 5), 2=-131(LC 9)

FORCES. (lb) - Max. Comp./Max. Ten. - All forces 250 (lb) or less except when shown.
TOP CHORD 2-8=-358/142, 8-9=-319/145, 3-9=-306/159, 5-6=-321/240
BOT CHORD 2-7=-298/290

NOTES-
1) Unbalanced roof live loads have been considered for this design.
2) Wind: ASCE 7-05; 130mph; TCDL=6.0psf; BCDL=6.0psf; h=25ft; B=45ft; L=24ft; eave=4ft; Cat. II; Exp B; Enclosed; MWFRS (all heights) and C-C Exterior(2) -0-10-8 to 2-1-8, Interior(1) 2-1-8 to 6-8-4 zone; cantilever left and right exposed ; end vertical left and right exposed;C-C for members and forces & MWFRS for reactions shown; Lumber DOL=1.60 plate grip DOL=1.60
3) Provide adequate drainage to prevent water ponding.
4) This truss has been designed for a 10.0 psf bottom chord live load nonconcurrent with any other live loads.
5) * This truss has been designed for a live load of 20.0psf on the bottom chord in all areas where a rectangle 3-6-0 tall by 2-0-0 wide will fit between the bottom chord and any other members.
6) Refer to girder(s) for truss to truss connections.
7) Provide mechanical connection (by others) of truss to bearing plate capable of withstanding 165 lb uplift at joint 6 and 131 lb uplift at joint 2.
8) This truss is designed in accordance with the 2006 International Building Code section 2306.1 and referenced standard ANSI/TPI 1.
9) Graphical purlin representation does not depict the size or the orientation of the purlin along the top and/or bottom chord.
10) Hanger(s) or other connection device(s) shall be provided sufficient to support concentrated load(s) . The design/selection of such connection device(s) is the responsibility of others.
11) In the LOAD CASE(S) section, loads applied to the face of the truss are noted as front (F) or back (B).

LOAD CASE(S) Standard
1) Dead + Roof Live (balanced) + Uninhab. Attic Storage + Attic Floor: Lumber Increase=1.15, Plate Increase=1.15
Uniform Loads (plf)
Vert: 1-3=-60, 4-5=-115(F=-55), 2-6=-20
Concentrated Loads (lb)
Vert: 4=-200(F)

March 6,2020

WARNING - Verify design parameters and READ NOTES ON THIS AND INCLUDED MITEK REFERENCE PAGE MII-7473 rev. 10/03/2015 BEFORE USE.
Design valid for use only with MiTek® connectors. This design is based only upon parameters shown, and is for an individual building component, not a truss system. Before use, the building designer must verify the applicability of design parameters and properly incorporate this design into the overall building design. Bracing indicated is to prevent buckling of individual truss web and/or chord members only. Additional temporary and permanent bracing is always required for stability and to prevent collapse with possible personal injury and property damage. For general guidance regarding the fabrication, storage, delivery, erection and bracing of trusses and truss systems, see **ANSI/TPI1 Quality Criteria, DSB-89 and BCSI Building Component Safety Information** available from Truss Plate Institute, 218 N. Lee Street, Suite 312, Alexandria, VA 22314.

ENGINEERING BY TRENCO
A MiTek Affiliate
818 Soundside Road
Edenton, NC 27932

Job	Truss	Truss Type	Qty	Ply	240.3174.C
23412A	M4	MONOPITCH	3	1	I40522828 Job Reference (optional)

84 Components (Dunn), Dunn, NC - 28334, 8.330 s Feb 13 2020 MiTek Industries, Inc. Fri Mar 6 11:40:12 2020 Page 1

ID:B_Q7f7Biu7XlherXjarx6dzmHHa-zX7eS4zrL6c9dGK4tuH?MkVg6XR8sneSm0x9smzdfA1

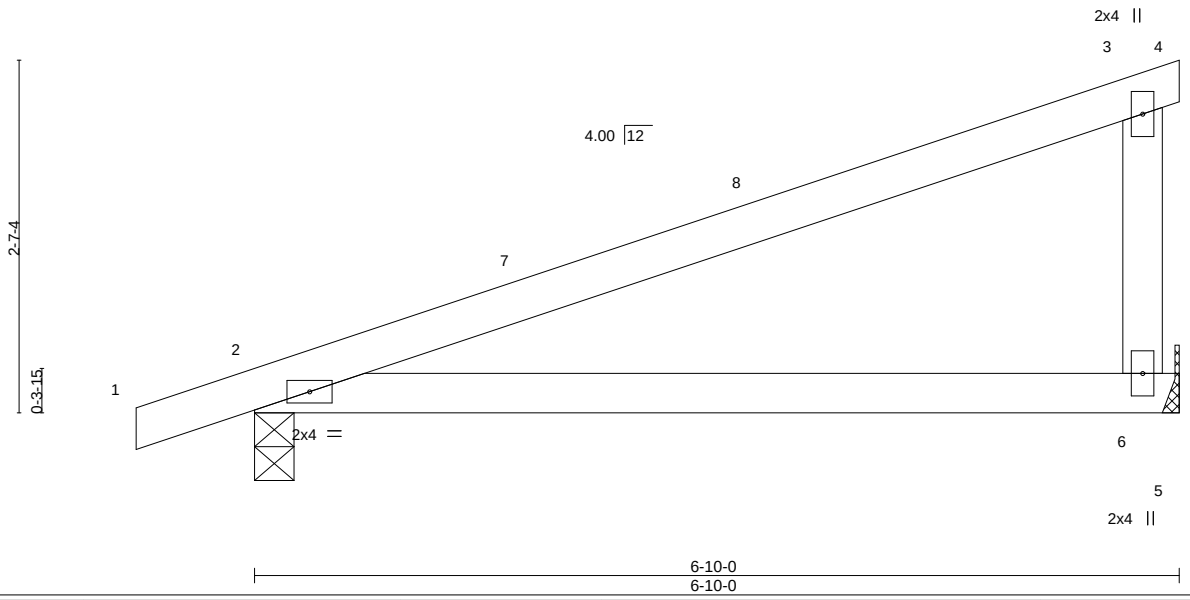

LOADING (psf)		SPACING- 2-0-0		CSI.		DEFL. in (loc) l/defl L/d		PLATES GRIP
TCLL	20.0	Plate Grip DOL	1.15	TC	0.80	Vert(LL) -0.10 2-6 >761 240		MT20 244/190
TCDL	10.0	Lumber DOL	1.15	BC	0.53	Vert(CT) -0.20 2-6 >380 180		
BCLL	0.0 *	Rep Stress Incr	YES	WB	0.04	Horz(CT) 0.00 n/a n/a		
BCDL	10.0	Code IRC2015/TPI2014		Matrix-P				Weight: 25 lb FT = 20%

LUMBER-

TOP CHORD 2x4 SP No.2
BOT CHORD 2x4 SP No.2
WEBS 2x4 SP No.3

BRACING-

TOP CHORD Structural wood sheathing directly applied or 6-0-0 oc purlins.
BOT CHORD Rigid ceiling directly applied or 10-0-0 oc bracing.

REACTIONS. (size) 2=0-3-8, 6=Mechanical
Max Horz 2=102(LC 8)
Max Uplift 2=-75(LC 8), 6=-63(LC 12)
Max Grav 2=323(LC 1), 6=263(LC 1)

FORCES. (lb) - Max. Comp./Max. Ten. - All forces 250 (lb) or less except when shown.

NOTES-

1) Wind: ASCE 7-10; Vult=130mph (3-second gust) Vasd=103mph; TCDL=6.0psf; BCDL=6.0psf; h=25ft; Cat. II; Exp B; Enclosed; MWFRS (envelope) gable end zone and C-C Exterior(2) -0-10-8 to 2-1-8, Interior(1) 2-1-8 to 6-10-0 zone;C-C for members and forces & MWFRS for reactions shown; Lumber DOL=1.60 plate grip DOL=1.60
2) This truss has been designed for a 10.0 psf bottom chord live load nonconcurrent with any other live loads.
3) * This truss has been designed for a live load of 20.0psf on the bottom chord in all areas where a rectangle 3-6-0 tall by 2-0-0 wide will fit between the bottom chord and any other members.
4) Refer to girder(s) for truss to truss connections.
5) Provide mechanical connection (by others) of truss to bearing plate capable of withstanding 100 lb uplift at joint(s) 6.
6) One RT7A USP connectors recommended to connect truss to bearing walls due to UPLIFT at jt(s) 2. This connection is for uplift only and does not consider lateral forces.

March 6,2020

WARNING - Verify design parameters and READ NOTES ON THIS AND INCLUDED MITEK REFERENCE PAGE MII-7473 rev. 10/03/2015 BEFORE USE.
Design valid for use only with MiTek® connectors. This design is based only upon parameters shown, and is for an individual building component, not a truss system. Before use, the building designer must verify the applicability of design parameters and properly incorporate this design into the overall building design. Bracing indicated is to prevent buckling of individual truss web and/or chord members only. Additional temporary and permanent bracing is always required for stability and to prevent collapse with possible personal injury and property damage. For general guidance regarding the fabrication, storage, delivery, erection and bracing of trusses and truss systems, see **ANSI/TPI1 Quality Criteria, DSB-89 and BCSI Building Component Safety Information** available from Truss Plate Institute, 218 N. Lee Street, Suite 312, Alexandria, VA 22314.

ENGINEERING BY TRENCO A MiTek Affiliate
818 Soundside Road
Edenton, NC 27932

Job	Truss	Truss Type	Qty	Ply	240.3174.C
23412A	M5	HALF HIP GIRDER	1	1	I40522829 Job Reference (optional)

84 Components (Dunn), Dunn, NC - 28334, 8.330 s Feb 13 2020 MiTek Industries, Inc. Fri Mar 6 11:40:12 2020 Page 1
ID:B_Q7f7Biu7XlherXjarx6dzmHHa-zX7eS4zrL6c9dGK4tuH?MkVjgXVmsnnSm0x9smzdfA1

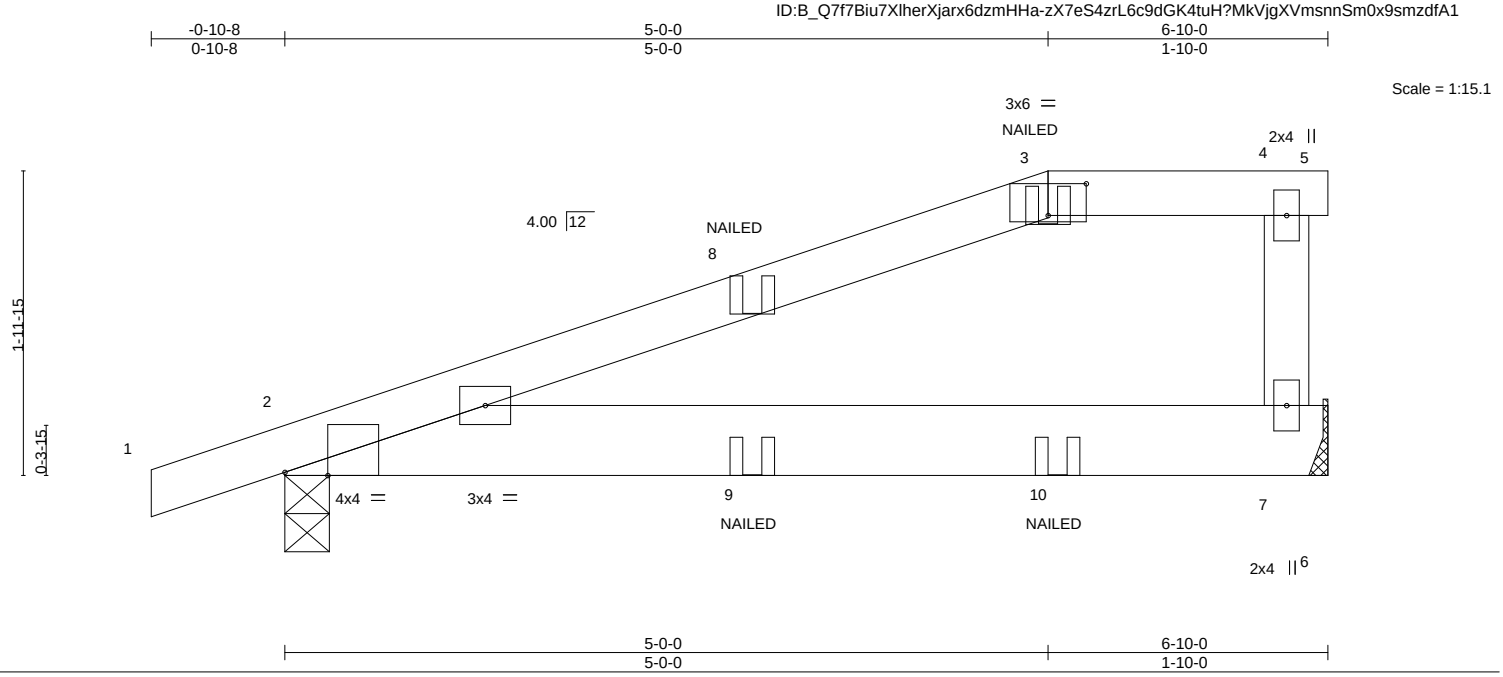

Plate Offsets (X,Y)-- [2:0-3-6,Edge], [3:0-3-0,0-2-8]

LOADING (psf)		SPACING- 2-0-0		CSI.		DEFL. in (loc) l/defl L/d		PLATES	GRIP
TCLL	20.0	Plate Grip DOL	1.15	TC	0.63	Vert(LL) 0.03 2-7 >999 240		MT20	244/190
TCDL	10.0	Lumber DOL	1.15	BC	0.30	Vert(CT) -0.06 2-7 >999 180			
BCLL	0.0 *	Rep Stress Incr	NO	WB	0.03	Horz(CT) 0.00 n/a n/a			
BCDL	10.0	Code IRC2015/TPI2014		Matrix-S				Weight: 30 lb	FT = 20%

LUMBER-
TOP CHORD 2x4 SP No.2
BOT CHORD 2x6 SP No.2
WEBS 2x4 SP No.3

BRACING-
TOP CHORD Structural wood sheathing directly applied or 6-0-0 oc purlins, except 2-0-0 oc purlins: 3-5.
BOT CHORD Rigid ceiling directly applied or 10-0-0 oc bracing.

REACTIONS. (size) 2=0-3-8, 7=Mechanical
Max Horz 2=80(LC 4)
Max Uplift 2=-87(LC 4), 7=-55(LC 4)
Max Grav 2=329(LC 1), 7=268(LC 1)

FORCES. (lb) - Max. Comp./Max. Ten. - All forces 250 (lb) or less except when shown.

NOTES-
1) Unbalanced roof live loads have been considered for this design.
2) Wind: ASCE 7-10; Vult=130mph (3-second gust) Vasd=103mph; TCDL=6.0psf; BCDL=6.0psf; h=25ft; Cat. II; Exp B; Enclosed; MWFRS (envelope) gable end zone; Lumber DOL=1.60 plate grip DOL=1.60
3) Provide adequate drainage to prevent water ponding.
4) This truss has been designed for a 10.0 psf bottom chord live load nonconcurrent with any other live loads.
5) * This truss has been designed for a live load of 20.0psf on the bottom chord in all areas where a rectangle 3-6-0 tall by 2-0-0 wide will fit between the bottom chord and any other members.
6) Refer to girder(s) for truss to truss connections.
7) Provide mechanical connection (by others) of truss to bearing plate capable of withstanding 100 lb uplift at joint(s) 7.
8) One RT7A USP connectors recommended to connect truss to bearing walls due to UPLIFT at jt(s) 2. This connection is for uplift only and does not consider lateral forces.
9) Graphical purlin representation does not depict the size or the orientation of the purlin along the top and/or bottom chord.
10) "NAILED" indicates 3-10d (0.148"x3") or 3-12d (0.148"x3.25") toe-nails per NDS guidlines.
11) In the LOAD CASE(S) section, loads applied to the face of the truss are noted as front (F) or back (B).

LOAD CASE(S) Standard
1) Dead + Roof Live (balanced): Lumber Increase=1.15, Plate Increase=1.15
Uniform Loads (plf)
Vert: 1-3=-60, 3-4=-60, 4-5=-20, 2-6=-20
Concentrated Loads (lb)
Vert: 8=-9(F) 9=-4(F) 10=2(F)

March 6,2020

WARNING - Verify design parameters and READ NOTES ON THIS AND INCLUDED MITEK REFERENCE PAGE MII-7473 rev. 10/03/2015 BEFORE USE.
Design valid for use only with MiTek® connectors. This design is based only upon parameters shown, and is for an individual building component, not a truss system. Before use, the building designer must verify the applicability of design parameters and properly incorporate this design into the overall building design. Bracing indicated is to prevent buckling of individual truss web and/or chord members only. Additional temporary and permanent bracing is always required for stability and to prevent collapse with possible personal injury and property damage. For general guidance regarding the fabrication, storage, delivery, erection and bracing of trusses and truss systems, see **ANSI/TPI1 Quality Criteria, DSB-89 and BCSI Building Component Safety Information** available from Truss Plate Institute, 218 N. Lee Street, Suite 312, Alexandria, VA 22314.

ENGINEERING BY TRENCO A MiTek Affiliate
818 Soundside Road
Edenton, NC 27932

Job	Truss	Truss Type	Qty	Ply	240.3174.C
23412A	T1	COMMON	5	1	I40522830
					Job Reference (optional)

84 Components (Dunn), Dunn, NC - 28334, 8.330 s Feb 13 2020 MiTek Industries, Inc. Fri Mar 6 11:40:13 2020 Page 1

ID:B_Q7f7Biu7XlherXjarx6dzmHHa-Rjg0fP_T6Pk0FQvGQboEuy2pYxj1b5Tb?ggiOCzdfA0

-0-10-8	7-4-9	14-1-4	20-10-0	27-6-12	34-3-7	41-8-0	42-6-8
0-10-8	7-4-9	6-8-12	6-8-12	6-8-12	6-8-12	7-4-9	0-10-8

Scale = 1:69.8

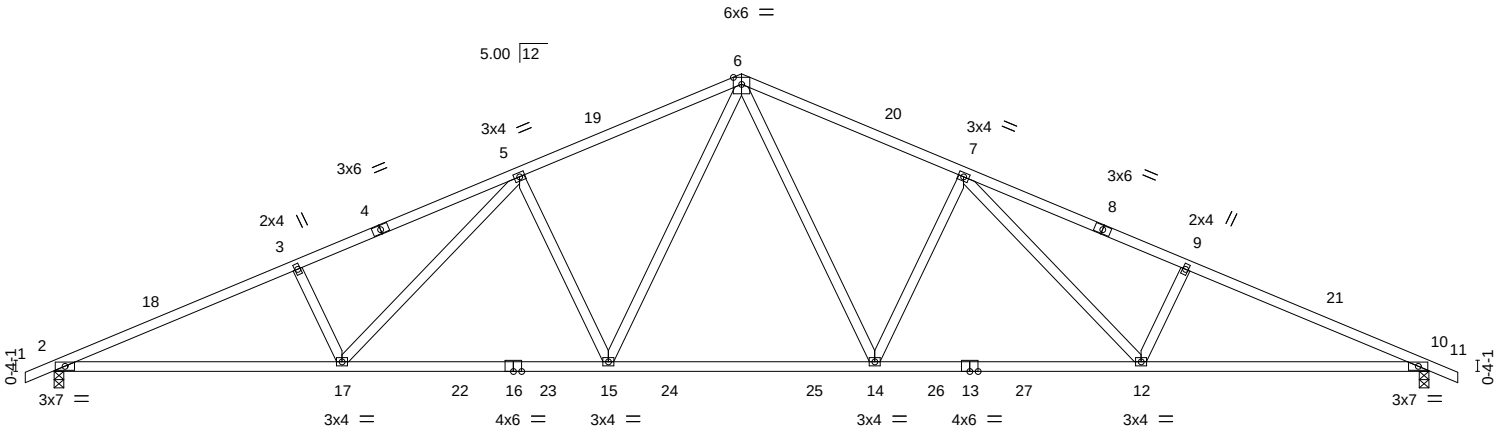

8-8-11	16-9-9	24-10-7	32-11-5	41-8-0
8-8-11	8-0-14	8-0-14	8-0-14	8-8-11

LOADING (psf)		**SPACING-** 2-0-0		**CSI.**		**DEFL.**	in	(loc)	l/defl	L/d	**PLATES**	**GRIP**
TCLL	20.0	Plate Grip DOL	1.15	TC	0.95	Vert(LL)	-0.30	14-15	>999	240	MT20	244/190
TCDL	10.0	Lumber DOL	1.15	BC	0.81	Vert(CT)	-0.60	14-15	>831	180		
BCLL	0.0 *	Rep Stress Incr	YES	WB	0.58	Horz(CT)	0.16	10	n/a	n/a		
BCDL	10.0	Code IRC2015/TPI2014		Matrix-S							Weight: 211 lb	FT = 20%

LUMBER-
TOP CHORD 2x4 SP No.2 *Except*
1-4,8-11: 2x4 SP No.1
BOT CHORD 2x4 SP No.1
WEBS 2x4 SP No.3

BRACING-
TOP CHORD Structural wood sheathing directly applied.
BOT CHORD Rigid ceiling directly applied or 9-1-14 oc bracing.

REACTIONS. (size) 2=0-3-8, 10=0-3-8
Max Horz 2=151(LC 12)
Max Uplift 2=-223(LC 12), 10=-223(LC 13)
Max Grav 2=1716(LC 1), 10=1716(LC 1)

FORCES. (lb) - Max. Comp./Max. Ten. - All forces 250 (lb) or less except when shown.
TOP CHORD 2-3=-3618/433, 3-5=-3437/458, 5-6=-2637/397, 6-7=-2637/397, 7-9=-3437/458, 9-10=-3618/433
BOT CHORD 2-17=-466/3256, 15-17=-285/2619, 14-15=-99/1984, 12-14=-188/2619, 10-12=-315/3256
WEBS 6-14=-171/925, 7-14=-701/276, 7-12=-133/722, 9-12=-380/219, 6-15=-171/925, 5-15=-701/276, 5-17=-133/722, 3-17=-380/219

NOTES-
1) Unbalanced roof live loads have been considered for this design.
2) Wind: ASCE 7-10; Vult=130mph (3-second gust) Vasd=103mph; TCDL=6.0psf; BCDL=6.0psf; h=25ft; Cat. II; Exp B; Enclosed; MWFRS (envelope) gable end zone and C-C Exterior(2) -0-10-8 to 3-3-8, Interior(1) 3-3-8 to 20-10-0, Exterior(2) 20-10-0 to 25-0-0, Interior(1) 25-0-0 to 42-6-8 zone;C-C for members and forces & MWFRS for reactions shown; Lumber DOL=1.60 plate grip DOL=1.60
3) This truss has been designed for a 10.0 psf bottom chord live load nonconcurrent with any other live loads.
4) * This truss has been designed for a live load of 20.0psf on the bottom chord in all areas where a rectangle 3-6-0 tall by 2-0-0 wide will fit between the bottom chord and any other members, with BCDL = 10.0psf.
5) One RT7A USP connectors recommended to connect truss to bearing walls due to UPLIFT at jt(s) 2 and 10. This connection is for uplift only and does not consider lateral forces.

March 6,2020

WARNING - Verify design parameters and READ NOTES ON THIS AND INCLUDED MITEK REFERENCE PAGE MII-7473 rev. 10/03/2015 BEFORE USE.
Design valid for use only with MiTek® connectors. This design is based only upon parameters shown, and is for an individual building component, not a truss system. Before use, the building designer must verify the applicability of design parameters and properly incorporate this design into the overall building design. Bracing indicated is to prevent buckling of individual truss web and/or chord members only. Additional temporary and permanent bracing is always required for stability and to prevent collapse with possible personal injury and property damage. For general guidance regarding the fabrication, storage, delivery, erection and bracing of trusses and truss systems, see **ANSI/TPI1 Quality Criteria, DSB-89 and BCSI Building Component Safety Information** available from Truss Plate Institute, 218 N. Lee Street, Suite 312, Alexandria, VA 22314.

ENGINEERING BY TRENCO A MiTek Affiliate
818 Soundside Road
Edenton, NC 27932

Job	Truss	Truss Type	Qty	Ply	240.3174.C
23412A	T2	ROOF TRUSS	4	1	I40522831 Job Reference (optional)

84 Components (Dunn), Dunn, NC - 28334, 8.330 s Feb 13 2020 MiTek Industries, Inc. Fri Mar 6 11:40:15 2020 Page 1

ID:B_Q7f7Biu7XlherXjarx6dzmHHa-N6on45?je1_jUk3fY0ri_N78akPL30xuT_9pT5zdfA_

-0-10-8	7-4-9	13-7-4	20-10-0	28-0-12	34-3-7	41-4-8
0-10-8	7-4-9	6-2-11	7-2-12	7-2-12	6-2-11	7-1-1

Scale = 1:68.8

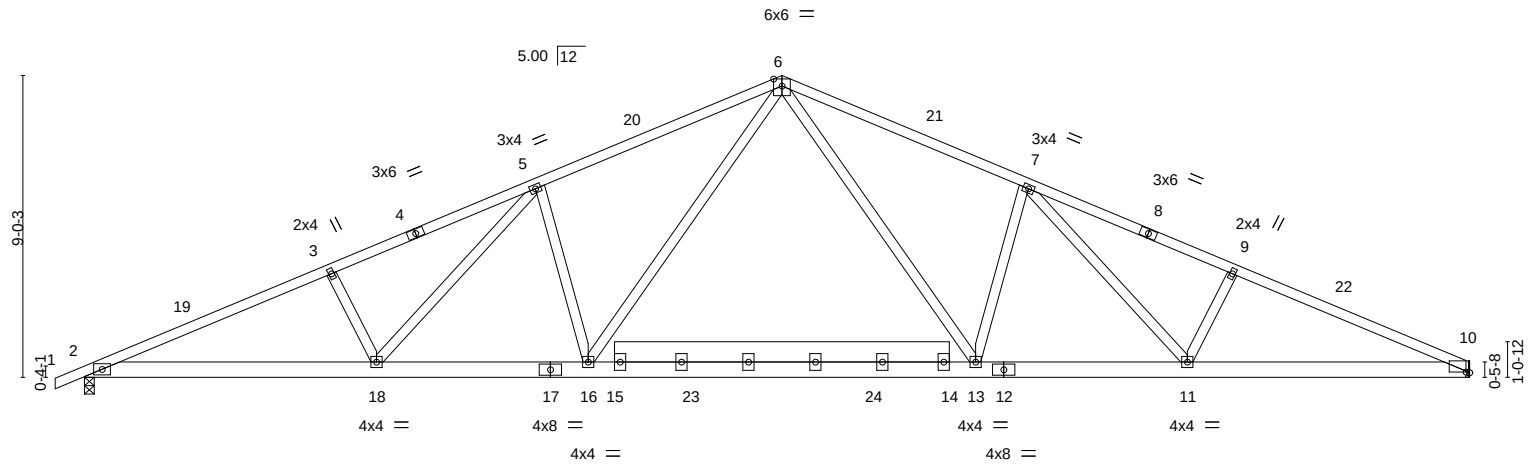

8-8-11	15-0-9	26-7-7	32-11-5	41-4-8
8-8-11	6-3-14	11-6-14	6-3-14	8-5-3

Plate Offsets (X,Y)-- [10:0-1-5,0-0-3]

LOADING (psf)		**SPACING-** 2-0-0	**CSI.**		**DEFL.** in (loc) l/defl L/d	**PLATES**	**GRIP**
TCLL	20.0	Plate Grip DOL 1.15	TC	0.98	Vert(LL) -0.21 13-16 >999 240	MT20	244/190
TCDL	10.0	Lumber DOL 1.15	BC	0.82	Vert(CT) -0.44 13-16 >999 180		
BCLL	0.0 *	Rep Stress Incr YES	WB	0.46	Horz(CT) 0.10 10 n/a n/a		
BCDL	10.0	Code IRC2015/TPI2014	Matrix-S			Weight: 272 lb	FT = 20%

LUMBER-

TOP CHORD 2x4 SP No.1 *Except*
1-4: 2x4 SP No.2, 8-10: 2x4 SP DSS
BOT CHORD 2x6 SP No.2 *Except*
14-15: 2x8 SP No.2
WEBS 2x4 SP No.3

BRACING-

TOP CHORD Structural wood sheathing directly applied.
BOT CHORD Rigid ceiling directly applied or 10-0-0 oc bracing.

REACTIONS. (size) 2=0-3-8, 10=Mechanical
Max Horz 2=158(LC 12)
Max Uplift 2=-223(LC 12), 10=-199(LC 13)
Max Grav 2=1709(LC 1), 10=1646(LC 1)

FORCES. (lb) - Max. Comp./Max. Ten. - All forces 250 (lb) or less except when shown.
TOP CHORD 2-3=-3641/438, 3-5=-3459/457, 5-6=-2818/430, 6-7=-2803/433, 7-9=-3405/452, 9-10=-3583/431
BOT CHORD 2-18=-474/3285, 16-18=-305/2697, 13-16=-120/1949, 11-13=-202/2677, 10-11=-326/3222
WEBS 6-13=-199/1013, 7-13=-685/280, 7-11=-125/624, 9-11=-342/204, 6-16=-201/1035, 5-16=-706/284, 5-18=-128/665, 3-18=-366/201

NOTES-

1) Unbalanced roof live loads have been considered for this design.
2) Wind: ASCE 7-10; Vult=130mph (3-second gust) Vasd=103mph; TCDL=6.0psf; BCDL=6.0psf; h=25ft; Cat. II; Exp B; Enclosed; MWFRS (envelope) gable end zone and C-C Exterior(2) -0-10-8 to 3-3-2, Interior(1) 3-3-2 to 20-10-0, Exterior(2) 20-10-0 to 24-11-10 , Interior(1) 24-11-10 to 41-3-12 zone;C-C for members and forces & MWFRS for reactions shown; Lumber DOL=1.60 plate grip DOL=1.60
3) All plates are 4x6 MT20 unless otherwise indicated.
4) This truss has been designed for a 10.0 psf bottom chord live load nonconcurrent with any other live loads.
5) * This truss has been designed for a live load of 20.0psf on the bottom chord in all areas where a rectangle 3-6-0 tall by 2-0-0 wide will fit between the bottom chord and any other members, with BCDL = 10.0psf.
6) Refer to girder(s) for truss to truss connections.
7) Provide mechanical connection (by others) of truss to bearing plate capable of withstanding 100 lb uplift at joint(s) except (jt=lb) 10=199.
8) One RT7A USP connectors recommended to connect truss to bearing walls due to UPLIFT at jt(s) 2. This connection is for uplift only and does not consider lateral forces.
9) ATTIC SPACE SHOWN IS DESIGNED AS UNINHABITABLE.

March 6,2020

WARNING - Verify design parameters and READ NOTES ON THIS AND INCLUDED MITEK REFERENCE PAGE MII-7473 rev. 10/03/2015 BEFORE USE.
Design valid for use only with MiTek® connectors. This design is based only upon parameters shown, and is for an individual building component, not a truss system. Before use, the building designer must verify the applicability of design parameters and properly incorporate this design into the overall building design. Bracing indicated is to prevent buckling of individual truss web and/or chord members only. Additional temporary and permanent bracing is always required for stability and to prevent collapse with possible personal injury and property damage. For general guidance regarding the fabrication, storage, delivery, erection and bracing of trusses and truss systems, see **ANSI/TPI1 Quality Criteria, DSB-89 and BCSI Building Component Safety Information** available from Truss Plate Institute, 218 N. Lee Street, Suite 312, Alexandria, VA 22314.

ENGINEERING BY TRENCO A MiTek Affiliate
818 Soundside Road
Edenton, NC 27932

Job	Truss	Truss Type	Qty	Ply	240.3174.C
23412A	V1	VALLEY	1	1	I40522832 Job Reference (optional)

84 Components (Dunn), Dunn, NC - 28334, 8.330 s Feb 13 2020 MiTek Industries, Inc. Fri Mar 6 11:40:15 2020 Page 1
ID:B_Q7f7Biu7XlherXjarx6dzmHHa-N6on45?je1_jUk3fY0ri_N7lekYi372uT_9pT5zdfA_

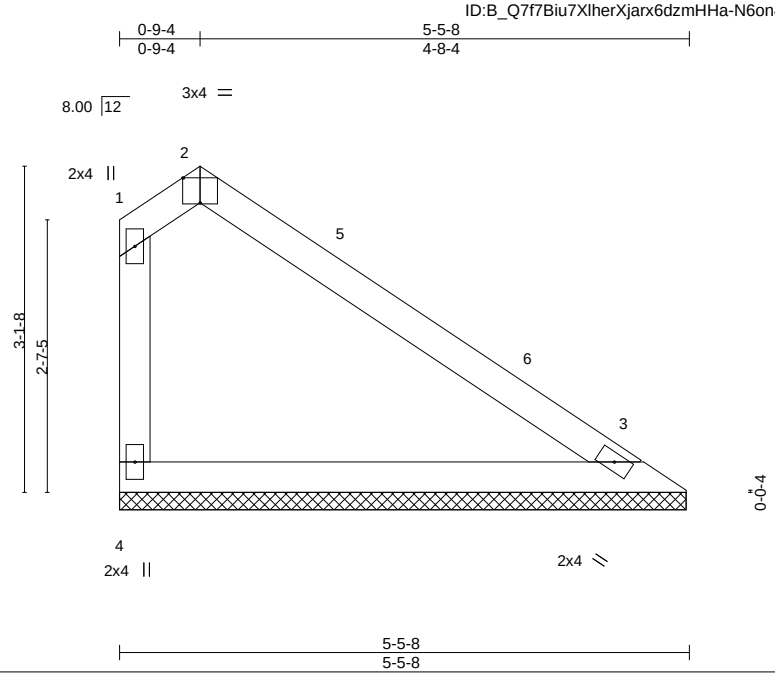

Plate Offsets (X,Y)-- [2:0-2-0,Edge]

LOADING (psf)		SPACING-	2-0-0	CSI.		DEFL.	in	(loc)	l/defl	L/d	PLATES	GRIP
TCLL	20.0	Plate Grip DOL	1.15	TC	0.33	Vert(LL)	n/a	-	n/a	999	MT20	244/190
TCDL	10.0	Lumber DOL	1.15	BC	0.22	Vert(CT)	n/a	-	n/a	999		
BCLL	0.0 *	Rep Stress Incr	YES	WB	0.00	Horz(CT)	0.00	3	n/a	n/a		
BCDL	10.0	Code IRC2015/TPI2014		Matrix-R							Weight: 20 lb	FT = 20%

LUMBER-
TOP CHORD 2x4 SP No.2
BOT CHORD 2x4 SP No.2
WEBS 2x4 SP No.3

BRACING-
TOP CHORD Structural wood sheathing directly applied or 5-5-8 oc purlins, except end verticals.
BOT CHORD Rigid ceiling directly applied or 10-0-0 oc bracing.

REACTIONS. (size) 4=5-5-2, 3=5-5-2
Max Horz 4=-99(LC 13)
Max Uplift 4=-52(LC 13), 3=-8(LC 13)
Max Grav 4=194(LC 20), 3=193(LC 1)

FORCES. (lb) - Max. Comp./Max. Ten. - All forces 250 (lb) or less except when shown.

NOTES-
1) Unbalanced roof live loads have been considered for this design.
2) Wind: ASCE 7-10; Vult=130mph (3-second gust) Vasd=103mph; TCDL=6.0psf; BCDL=6.0psf; h=25ft; Cat. II; Exp B; Enclosed; MWFRS (envelope) gable end zone and C-C Exterior(2) 0-1-12 to 3-9-4, Interior(1) 3-9-4 to 4-11-12 zone;C-C for members and forces & MWFRS for reactions shown; Lumber DOL=1.60 plate grip DOL=1.60
3) Gable requires continuous bottom chord bearing.
4) This truss has been designed for a 10.0 psf bottom chord live load nonconcurrent with any other live loads.
5) * This truss has been designed for a live load of 20.0psf on the bottom chord in all areas where a rectangle 3-6-0 tall by 2-0-0 wide will fit between the bottom chord and any other members.
6) Provide mechanical connection (by others) of truss to bearing plate capable of withstanding 100 lb uplift at joint(s) 4, 3.

March 6,2020

WARNING - Verify design parameters and READ NOTES ON THIS AND INCLUDED MITEK REFERENCE PAGE MII-7473 rev. 10/03/2015 BEFORE USE.
Design valid for use only with MiTek® connectors. This design is based only upon parameters shown, and is for an individual building component, not a truss system. Before use, the building designer must verify the applicability of design parameters and properly incorporate this design into the overall building design. Bracing indicated is to prevent buckling of individual truss web and/or chord members only. Additional temporary and permanent bracing is always required for stability and to prevent collapse with possible personal injury and property damage. For general guidance regarding the fabrication, storage, delivery, erection and bracing of trusses and truss systems, see **ANSI/TPI1 Quality Criteria, DSB-89 and BCSI Building Component Safety Information** available from Truss Plate Institute, 218 N. Lee Street, Suite 312, Alexandria, VA 22314.

ENGINEERING BY TRENCO A MiTek Affiliate
818 Soundside Road
Edenton, NC 27932

Job	Truss	Truss Type	Qty	Ply	240.3174.C
23412A	V2	VALLEY	1	1	I40522833 Job Reference (optional)

84 Components (Dunn), Dunn, NC - 28334, 8.330 s Feb 13 2020 MiTek Industries, Inc. Fri Mar 6 11:40:16 2020 Page 1

ID:B_Q7f7Biu7XlherXjarx6dzmHHa-rIM9IR0LPK6a6uer6jMxWagV98wboaH1hevM_Xzdf9z

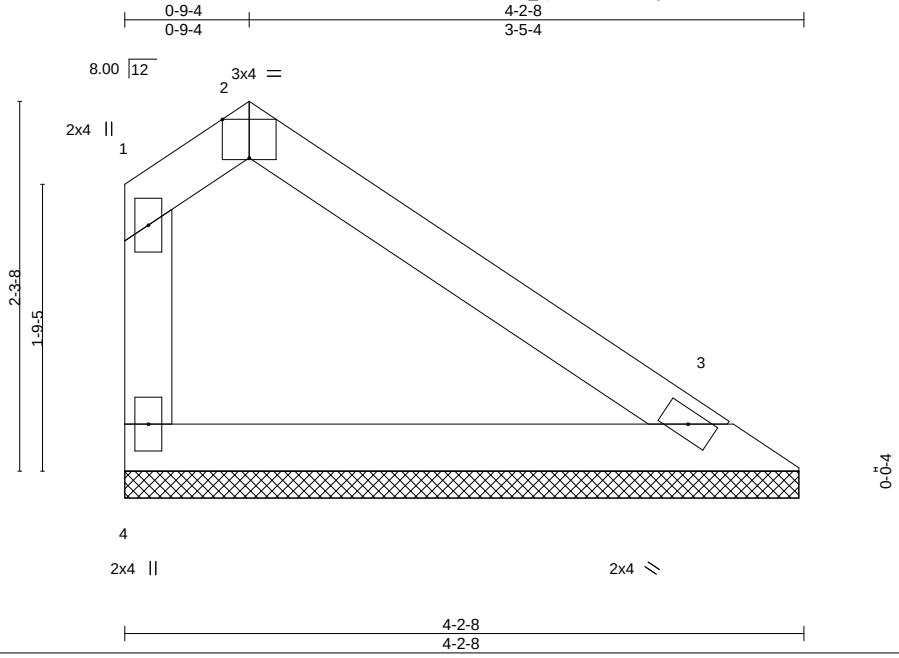

Scale = 1:14.3

Plate Offsets (X,Y)-- [2:0-2-0,Edge]

LOADING (psf)		SPACING-	2-0-0	CSI.		DEFL.	in	(loc)	l/defl	L/d	PLATES	GRIP
TCLL	20.0	Plate Grip DOL	1.15	TC	0.15	Vert(LL)	n/a	-	n/a	999	MT20	244/190
TCDL	10.0	Lumber DOL	1.15	BC	0.12	Vert(CT)	n/a	-	n/a	999		
BCLL	0.0 *	Rep Stress Incr	YES	WB	0.00	Horz(CT)	0.00	3	n/a	n/a		
BCDL	10.0	Code IRC2015/TPI2014		Matrix-R							Weight: 15 lb	FT = 20%

LUMBER-

TOP CHORD 2x4 SP No.2
BOT CHORD 2x4 SP No.2
WEBS 2x4 SP No.3

BRACING-

TOP CHORD Structural wood sheathing directly applied or 4-2-8 oc purlins, except end verticals.
BOT CHORD Rigid ceiling directly applied or 10-0-0 oc bracing.

REACTIONS. (size) 4=4-2-2, 3=4-2-2
Max Horz 4=-67(LC 13)
Max Uplift 4=-33(LC 13), 3=-9(LC 13)
Max Grav 4=143(LC 1), 3=143(LC 1)

FORCES. (lb) - Max. Comp./Max. Ten. - All forces 250 (lb) or less except when shown.

NOTES-

1) Unbalanced roof live loads have been considered for this design.
2) Wind: ASCE 7-10; Vult=130mph (3-second gust) Vasd=103mph; TCDL=6.0psf; BCDL=6.0psf; h=25ft; Cat. II; Exp B; Enclosed; MWFRS (envelope) gable end zone and C-C Exterior(2) zone;C-C for members and forces & MWFRS for reactions shown; Lumber DOL=1.60 plate grip DOL=1.60
3) Gable requires continuous bottom chord bearing.
4) This truss has been designed for a 10.0 psf bottom chord live load nonconcurrent with any other live loads.
5) * This truss has been designed for a live load of 20.0psf on the bottom chord in all areas where a rectangle 3-6-0 tall by 2-0-0 wide will fit between the bottom chord and any other members.
6) Provide mechanical connection (by others) of truss to bearing plate capable of withstanding 100 lb uplift at joint(s) 4, 3.

March 6,2020

WARNING - Verify design parameters and READ NOTES ON THIS AND INCLUDED MITEK REFERENCE PAGE MII-7473 rev. 10/03/2015 BEFORE USE.
Design valid for use only with MiTek® connectors. This design is based only upon parameters shown, and is for an individual building component, not a truss system. Before use, the building designer must verify the applicability of design parameters and properly incorporate this design into the overall building design. Bracing indicated is to prevent buckling of individual truss web and/or chord members only. Additional temporary and permanent bracing is always required for stability and to prevent collapse with possible personal injury and property damage. For general guidance regarding the fabrication, storage, delivery, erection and bracing of trusses and truss systems, see **ANSI/TPI1 Quality Criteria, DSB-89 and BCSI Building Component Safety Information** available from Truss Plate Institute, 218 N. Lee Street, Suite 312, Alexandria, VA 22314.

ENGINEERING BY TRENCO A MiTek Affiliate
818 Soundside Road
Edenton, NC 27932

Job	Truss	Truss Type	Qty	Ply	240.3174.C
23412A	V3	VALLEY	1	1	I40522834 Job Reference (optional)

84 Components (Dunn), Dunn, NC - 28334, 8.330 s Feb 13 2020 MiTek Industries, Inc. Fri Mar 6 11:40:17 2020 Page 1

ID:B_Q7f7Biu7XlherXjarx6dzmHHa-KVwXVn1_AeERk1D2fRtA3oCiRYGvX1XBwIewWzzdf9y

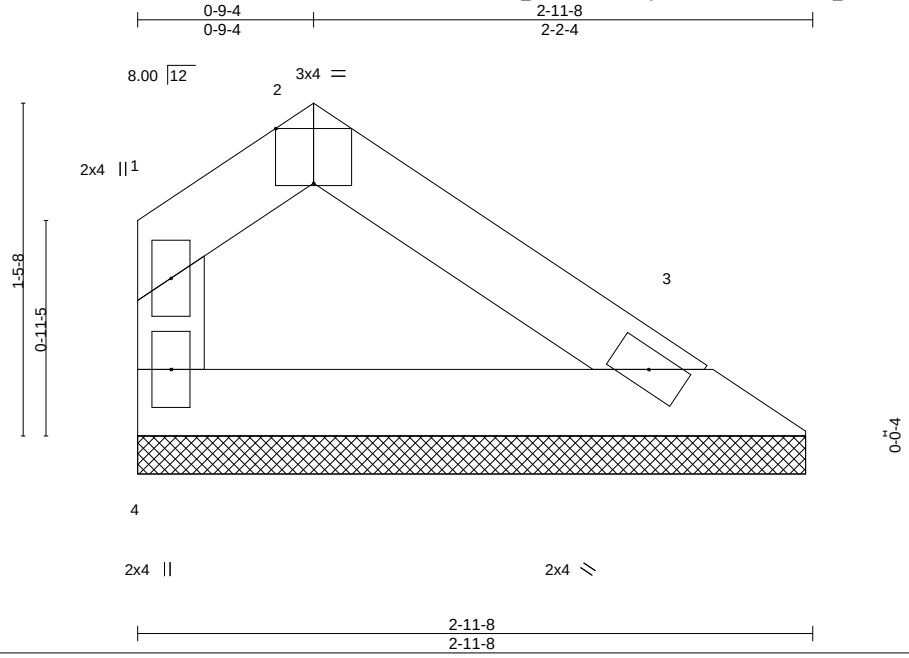

Scale = 1:10.1

Plate Offsets (X,Y)-- [2:0-2-0,Edge]

LOADING (psf)		SPACING-	2-0-0	CSI.		DEFL.	in	(loc)	l/defl	L/d	PLATES	GRIP
TCLL	20.0	Plate Grip DOL	1.15	TC	0.06	Vert(LL)	n/a	-	n/a	999	MT20	244/190
TCDL	10.0	Lumber DOL	1.15	BC	0.05	Vert(CT)	n/a	-	n/a	999		
BCLL	0.0 *	Rep Stress Incr	YES	WB	0.00	Horz(CT)	0.00	3	n/a	n/a		
BCDL	10.0	Code IRC2015/TPI2014		Matrix-R							Weight: 10 lb	FT = 20%

LUMBER-

TOP CHORD 2x4 SP No.2
BOT CHORD 2x4 SP No.2
WEBS 2x4 SP No.3

BRACING-

TOP CHORD Structural wood sheathing directly applied or 2-11-8 oc purlins, except end verticals.
BOT CHORD Rigid ceiling directly applied or 10-0-0 oc bracing.

REACTIONS. (size) 4=2-11-2, 3=2-11-2
Max Horz 4=-35(LC 13)
Max Uplift 4=-15(LC 13), 3=-9(LC 13)
Max Grav 4=93(LC 1), 3=93(LC 1)

FORCES. (lb) - Max. Comp./Max. Ten. - All forces 250 (lb) or less except when shown.

NOTES-

1) Unbalanced roof live loads have been considered for this design.
2) Wind: ASCE 7-10; Vult=130mph (3-second gust) Vasd=103mph; TCDL=6.0psf; BCDL=6.0psf; h=25ft; Cat. II; Exp B; Enclosed; MWFRS (envelope) gable end zone and C-C Exterior(2) zone;C-C for members and forces & MWFRS for reactions shown; Lumber DOL=1.60 plate grip DOL=1.60
3) Gable requires continuous bottom chord bearing.
4) This truss has been designed for a 10.0 psf bottom chord live load nonconcurrent with any other live loads.
5) * This truss has been designed for a live load of 20.0psf on the bottom chord in all areas where a rectangle 3-6-0 tall by 2-0-0 wide will fit between the bottom chord and any other members.
6) Provide mechanical connection (by others) of truss to bearing plate capable of withstanding 100 lb uplift at joint(s) 4, 3.

March 6,2020

WARNING - Verify design parameters and READ NOTES ON THIS AND INCLUDED MITEK REFERENCE PAGE MII-7473 rev. 10/03/2015 BEFORE USE.

Design valid for use only with MiTek® connectors. This design is based only upon parameters shown, and is for an individual building component, not a truss system. Before use, the building designer must verify the applicability of design parameters and properly incorporate this design into the overall building design. Bracing indicated is to prevent buckling of individual truss web and/or chord members only. Additional temporary and permanent bracing is always required for stability and to prevent collapse with possible personal injury and property damage. For general guidance regarding the fabrication, storage, delivery, erection and bracing of trusses and truss systems, see **ANSI/TPI1 Quality Criteria, DSB-89 and BCSI Building Component Safety Information** available from Truss Plate Institute, 218 N. Lee Street, Suite 312, Alexandria, VA 22314.

ENGINEERING BY TRENCO A MiTek Affiliate
818 Soundside Road
Edenton, NC 27932

Job	Truss	Truss Type	Qty	Ply	240.3174.C
23412A	V4	GABLE	1	1	I40522835 Job Reference (optional)

84 Components (Dunn), Dunn, NC - 28334, 8.330 s Feb 13 2020 MiTek Industries, Inc. Fri Mar 6 11:40:18 2020 Page 1
ID:B_Q7f7Biu7XlherXjarx6dzmHHa-ohUvj72cxyMILBnED8OPb?lndyYpGT6K9xOT3Qzdf9x

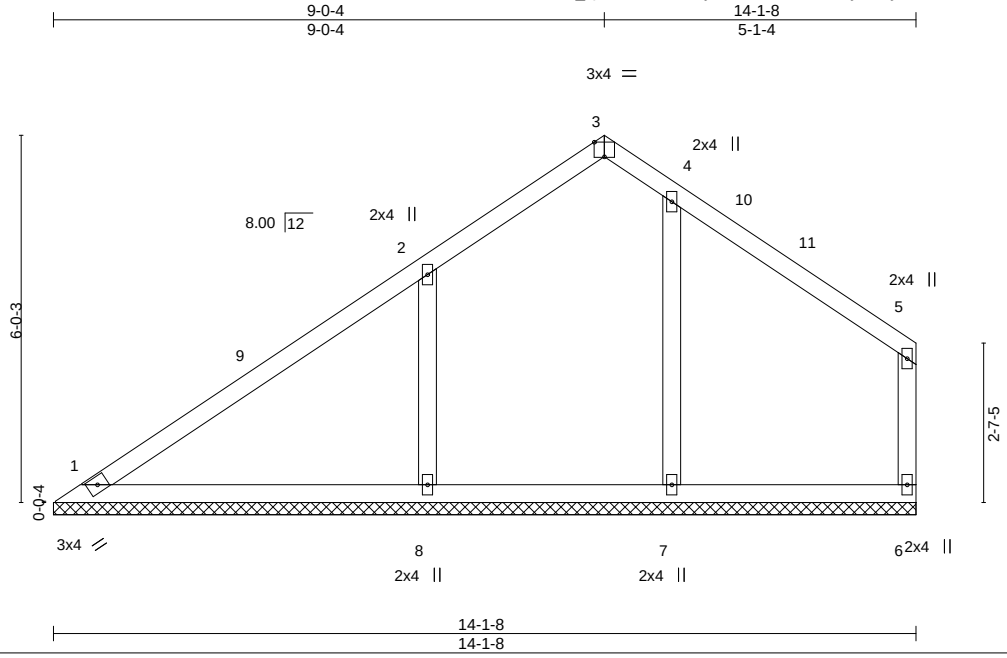

Plate Offsets (X,Y)-- [3:0-2-0,Edge]

LOADING (psf)		SPACING- 2-0-0		CSI.		DEFL. in (loc) l/defl L/d		PLATES	GRIP
TCLL	20.0	Plate Grip DOL	1.15	TC	0.41	Vert(LL) n/a - n/a 999		MT20	244/190
TCDL	10.0	Lumber DOL	1.15	BC	0.26	Vert(CT) n/a - n/a 999			
BCLL	0.0 *	Rep Stress Incr	YES	WB	0.11	Horz(CT) 0.00 6 n/a n/a			
BCDL	10.0	Code IRC2015/TPI2014		Matrix-S				Weight: 61 lb	FT = 20%

LUMBER-

TOP CHORD	2x4 SP No.2
BOT CHORD	2x4 SP No.2
WEBS	2x4 SP No.3
OTHERS	2x4 SP No.3

BRACING-

TOP CHORD	Structural wood sheathing directly applied or 6-0-0 oc purlins, except end verticals.
BOT CHORD	Rigid ceiling directly applied or 10-0-0 oc bracing.

REACTIONS. All bearings 14-1-8.
(lb) - Max Horz 1=147(LC 12)
Max Uplift All uplift 100 lb or less at joint(s) 1, 6 except 8=-165(LC 12)
Max Grav All reactions 250 lb or less at joint(s) 1, 6 except 7=323(LC 20), 8=564(LC 19)

FORCES. (lb) - Max. Comp./Max. Ten. - All forces 250 (lb) or less except when shown.
WEBS 2-8=-371/219

NOTES-
1) Unbalanced roof live loads have been considered for this design.
2) Wind: ASCE 7-10; Vult=130mph (3-second gust) Vasd=103mph; TCDL=6.0psf; BCDL=6.0psf; h=25ft; Cat. II; Exp B; Enclosed; MWFRS (envelope) gable end zone and C-C Exterior(2) 0-5-12 to 3-5-12, Interior(1) 3-5-12 to 9-0-4, Exterior(2) 9-0-4 to 12-0-4, Interior(1) 12-0-4 to 13-11-12 zone;C-C for members and forces & MWFRS for reactions shown; Lumber DOL=1.60 plate grip DOL=1.60
3) Gable requires continuous bottom chord bearing.
4) This truss has been designed for a 10.0 psf bottom chord live load nonconcurrent with any other live loads.
5) * This truss has been designed for a live load of 20.0psf on the bottom chord in all areas where a rectangle 3-6-0 tall by 2-0-0 wide will fit between the bottom chord and any other members, with BCDL = 10.0psf.
6) Provide mechanical connection (by others) of truss to bearing plate capable of withstanding 100 lb uplift at joint(s) 1, 6 except (jt=lb) 8=165.

March 6,2020

WARNING - Verify design parameters and READ NOTES ON THIS AND INCLUDED MITEK REFERENCE PAGE MII-7473 rev. 10/03/2015 BEFORE USE.
Design valid for use only with MiTek® connectors. This design is based only upon parameters shown, and is for an individual building component, not a truss system. Before use, the building designer must verify the applicability of design parameters and properly incorporate this design into the overall building design. Bracing indicated is to prevent buckling of individual truss web and/or chord members only. Additional temporary and permanent bracing is always required for stability and to prevent collapse with possible personal injury and property damage. For general guidance regarding the fabrication, storage, delivery, erection and bracing of trusses and truss systems, see **ANSI/TPI1 Quality Criteria, DSB-89 and BCSI Building Component Safety Information** available from Truss Plate Institute, 218 N. Lee Street, Suite 312, Alexandria, VA 22314.

ENGINEERING BY TRENCO A MiTek Affiliate
818 Soundside Road
Edenton, NC 27932

Job	Truss	Truss Type	Qty	Ply	240.3174.C
23412A	V5	GABLE	1	1	I40522836 Job Reference (optional)

84 Components (Dunn), Dunn, NC - 28334, 8.330 s Feb 13 2020 MiTek Industries, Inc. Fri Mar 6 11:40:18 2020 Page 1
ID:B_Q7f7Biu7XlherXjarx6dzmHHa-ohUvj72cxyMILBnED8OPb?lqFyaSGTbK9xOT3Qzdf9x

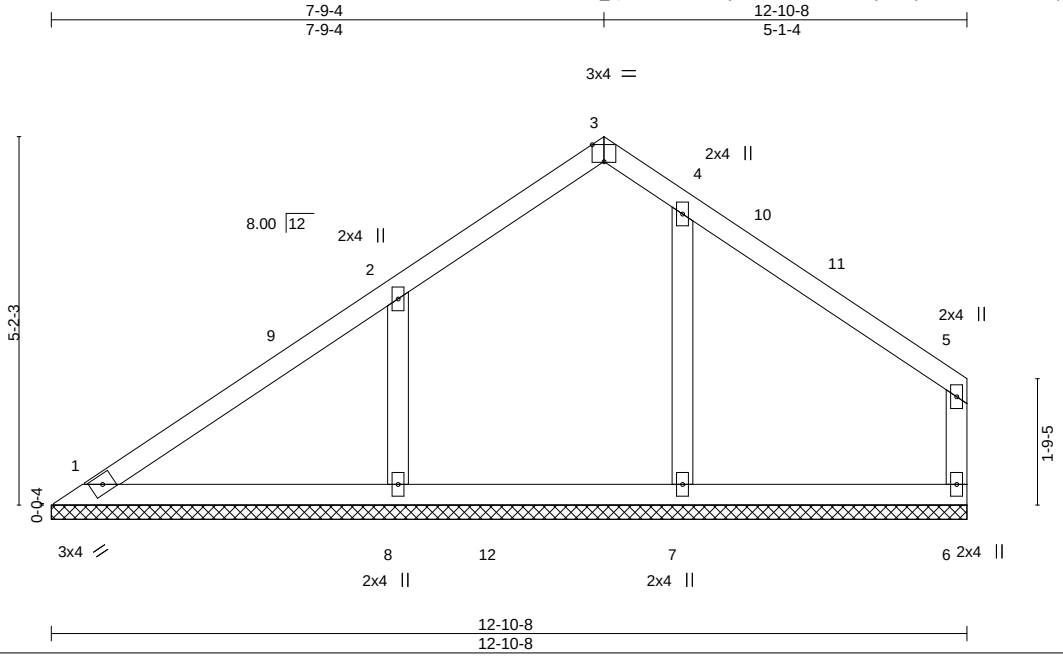

Plate Offsets (X,Y)-- [3:0-2-0,Edge]

LOADING (psf)		SPACING- 2-0-0		CSI.		DEFL. in (loc) l/defl L/d		PLATES	GRIP
TCLL	20.0	Plate Grip DOL	1.15	TC	0.24	Vert(LL) n/a - n/a 999		MT20	244/190
TCDL	10.0	Lumber DOL	1.15	BC	0.15	Vert(CT) n/a - n/a 999			
BCLL	0.0 *	Rep Stress Incr	YES	WB	0.08	Horz(CT) 0.00 6 n/a n/a			
BCDL	10.0	Code IRC2015/TPI2014		Matrix-S				Weight: 53 lb	FT = 20%

LUMBER-

TOP CHORD	2x4 SP No.2
BOT CHORD	2x4 SP No.2
WEBS	2x4 SP No.3
OTHERS	2x4 SP No.3

BRACING-

TOP CHORD	Structural wood sheathing directly applied or 6-0-0 oc purlins, except end verticals.
BOT CHORD	Rigid ceiling directly applied or 10-0-0 oc bracing.

REACTIONS. All bearings 12-10-8.
(lb) - Max Horz 1=116(LC 9)
Max Uplift All uplift 100 lb or less at joint(s) 1, 6, 7 except 8=-131(LC 12)
Max Grav All reactions 250 lb or less at joint(s) 1, 6 except 7=339(LC 20), 8=439(LC 19)

FORCES. (lb) - Max. Comp./Max. Ten. - All forces 250 (lb) or less except when shown.
WEBS 2-8=-304/179

NOTES-
1) Unbalanced roof live loads have been considered for this design.
2) Wind: ASCE 7-10; Vult=130mph (3-second gust) Vasd=103mph; TCDL=6.0psf; BCDL=6.0psf; h=25ft; Cat. II; Exp B; Enclosed; MWFRS (envelope) gable end zone and C-C Exterior(2) 0-5-12 to 3-5-12, Interior(1) 3-5-12 to 7-9-4, Exterior(2) 7-9-4 to 10-9-4, Interior(1) 10-9-4 to 12-8-12 zone;C-C for members and forces & MWFRS for reactions shown; Lumber DOL=1.60 plate grip DOL=1.60
3) Gable requires continuous bottom chord bearing.
4) This truss has been designed for a 10.0 psf bottom chord live load nonconcurrent with any other live loads.
5) * This truss has been designed for a live load of 20.0psf on the bottom chord in all areas where a rectangle 3-6-0 tall by 2-0-0 wide will fit between the bottom chord and any other members, with BCDL = 10.0psf.
6) Provide mechanical connection (by others) of truss to bearing plate capable of withstanding 100 lb uplift at joint(s) 1, 6, 7 except (jt=lb) 8=131.

March 6,2020

WARNING - Verify design parameters and READ NOTES ON THIS AND INCLUDED MITEK REFERENCE PAGE MII-7473 rev. 10/03/2015 BEFORE USE.
Design valid for use only with MiTek® connectors. This design is based only upon parameters shown, and is for an individual building component, not a truss system. Before use, the building designer must verify the applicability of design parameters and properly incorporate this design into the overall building design. Bracing indicated is to prevent buckling of individual truss web and/or chord members only. Additional temporary and permanent bracing is always required for stability and to prevent collapse with possible personal injury and property damage. For general guidance regarding the fabrication, storage, delivery, erection and bracing of trusses and truss systems, see **ANSI/TPI1 Quality Criteria, DSB-89 and BCSI Building Component Safety Information** available from Truss Plate Institute, 218 N. Lee Street, Suite 312, Alexandria, VA 22314.

ENGINEERING BY TRENCO A MiTek Affiliate
818 Soundside Road
Edenton, NC 27932

Job	Truss	Truss Type	Qty	Ply	240.3174.C
23412A	V6	GABLE	1	1	I40522837 Job Reference (optional)

84 Components (Dunn), Dunn, NC - 28334, 8.330 s Feb 13 2020 MiTek Industries, Inc. Fri Mar 6 11:40:19 2020 Page 1
ID:B_Q7f7Biu7XlherXjarx6dzmHHa-Gt2IwT2EiFU9zLMQnsve8DI00Lw5?x9UNb70bszdf9w

Scale = 1:27.6

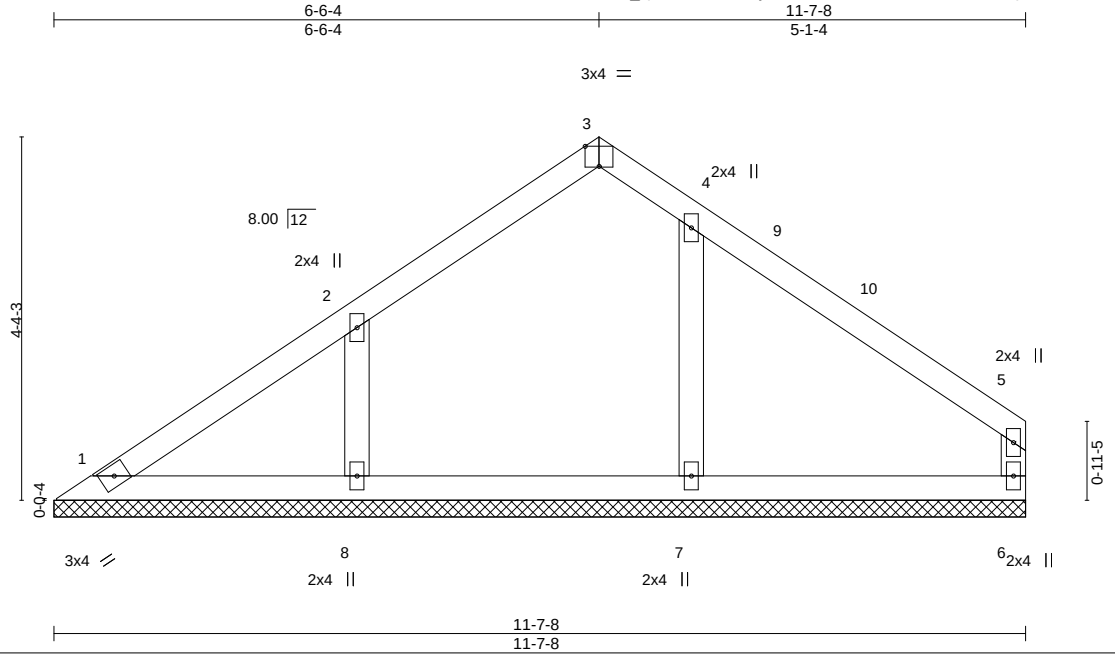

Plate Offsets (X,Y)-- [3:0-2-0,Edge]

LOADING (psf)		SPACING-	2-0-0	CSI.		DEFL.	in	(loc)	l/defl	L/d	PLATES	GRIP
TCLL	20.0	Plate Grip DOL	1.15	TC	0.18	Vert(LL)	n/a	-	n/a	999	MT20	244/190
TCDL	10.0	Lumber DOL	1.15	BC	0.13	Vert(CT)	n/a	-	n/a	999		
BCLL	0.0 *	Rep Stress Incr	YES	WB	0.06	Horz(CT)	0.00	6	n/a	n/a		
BCDL	10.0	Code IRC2015/TPI2014		Matrix-S							Weight: 46 lb	FT = 20%

LUMBER-

TOP CHORD	2x4 SP No.2
BOT CHORD	2x4 SP No.2
WEBS	2x4 SP No.3
OTHERS	2x4 SP No.3

BRACING-

TOP CHORD	Structural wood sheathing directly applied or 6-0-0 oc purlins, except end verticals.
BOT CHORD	Rigid ceiling directly applied or 10-0-0 oc bracing.

REACTIONS. All bearings 11-7-8.
(lb) - Max Horz 1=98(LC 9)
Max Uplift All uplift 100 lb or less at joint(s) 7 except 8=-105(LC 12)
Max Grav All reactions 250 lb or less at joint(s) 1, 6 except 7=308(LC 20), 8=323(LC 19)

FORCES. (lb) - Max. Comp./Max. Ten. - All forces 250 (lb) or less except when shown.

NOTES-
1) Unbalanced roof live loads have been considered for this design.
2) Wind: ASCE 7-10; Vult=130mph (3-second gust) Vasd=103mph; TCDL=6.0psf; BCDL=6.0psf; h=25ft; Cat. II; Exp B; Enclosed; MWFRS (envelope) gable end zone and C-C Exterior(2) 0-5-12 to 3-7-8, Interior(1) 3-7-8 to 6-6-4, Exterior(2) 6-6-4 to 9-6-4, Interior(1) 9-6-4 to 11-5-12 zone;C-C for members and forces & MWFRS for reactions shown; Lumber DOL=1.60 plate grip DOL=1.60
3) Gable requires continuous bottom chord bearing.
4) This truss has been designed for a 10.0 psf bottom chord live load nonconcurrent with any other live loads.
5) * This truss has been designed for a live load of 20.0psf on the bottom chord in all areas where a rectangle 3-6-0 tall by 2-0-0 wide will fit between the bottom chord and any other members.
6) Provide mechanical connection (by others) of truss to bearing plate capable of withstanding 100 lb uplift at joint(s) 7 except (jt=lb) 8=105.

March 6,2020

WARNING - Verify design parameters and READ NOTES ON THIS AND INCLUDED MITEK REFERENCE PAGE MII-7473 rev. 10/03/2015 BEFORE USE.
Design valid for use only with MiTek® connectors. This design is based only upon parameters shown, and is for an individual building component, not a truss system. Before use, the building designer must verify the applicability of design parameters and properly incorporate this design into the overall building design. Bracing indicated is to prevent buckling of individual truss web and/or chord members only. Additional temporary and permanent bracing is always required for stability and to prevent collapse with possible personal injury and property damage. For general guidance regarding the fabrication, storage, delivery, erection and bracing of trusses and truss systems, see **ANSI/TPI1 Quality Criteria, DSB-89 and BCSI Building Component Safety Information** available from Truss Plate Institute, 218 N. Lee Street, Suite 312, Alexandria, VA 22314.

ENGINEERING BY TRENCO A MiTek Affiliate
818 Soundside Road
Edenton, NC 27932

Job	Truss	Truss Type	Qty	Ply	240.3174.C
23412A	V7	GABLE	1	1	I40522838 Job Reference (optional)

84 Components (Dunn), Dunn, NC - 28334, 8.330 s Feb 13 2020 MiTek Industries, Inc. Fri Mar 6 11:40:20 2020 Page 1
ID:B_Q7f7Biu7XlherXjarx6dzmHHa-k4bg7p3sTZc0bVxdLZQthQqBvlGKkOXdcFta7Izdf9v

Scale = 1:22.6

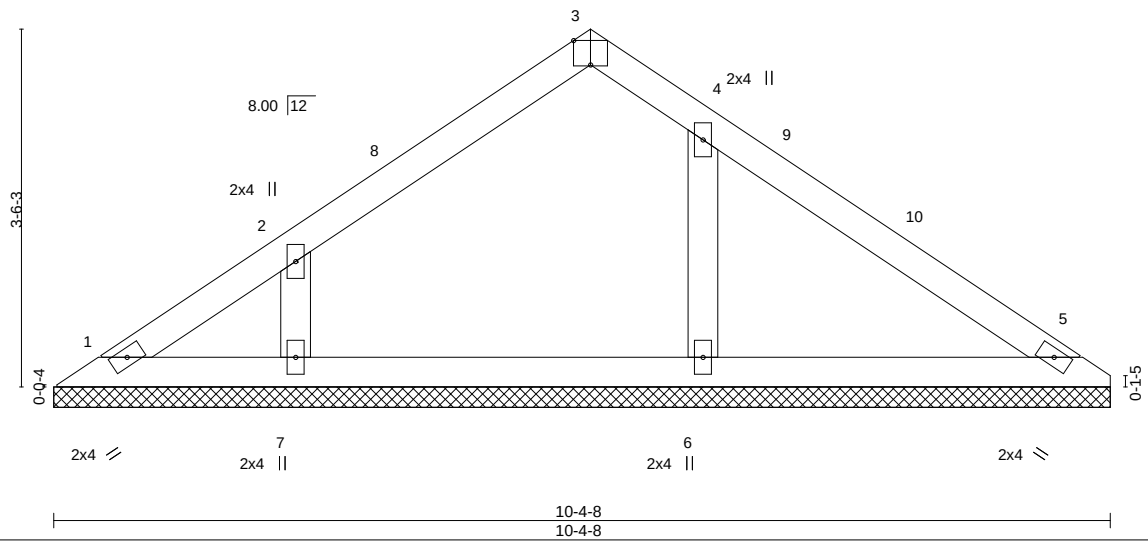

Plate Offsets (X,Y)-- [3:0-2-0,Edge]

LOADING (psf)		SPACING-	2-0-0	CSI.		DEFL.	in	(loc)	l/defl	L/d	PLATES	GRIP
TCLL	20.0	Plate Grip DOL	1.15	TC	0.17	Vert(LL)	n/a	-	n/a	999	MT20	244/190
TCDL	10.0	Lumber DOL	1.15	BC	0.13	Vert(CT)	n/a	-	n/a	999		
BCLL	0.0 *	Rep Stress Incr	YES	WB	0.05	Horz(CT)	0.00	5	n/a	n/a		
BCDL	10.0	Code IRC2015/TPI2014		Matrix-S							Weight: 37 lb	FT = 20%

LUMBER-
TOP CHORD 2x4 SP No.2
BOT CHORD 2x4 SP No.2
OTHERS 2x4 SP No.3

BRACING-
TOP CHORD Structural wood sheathing directly applied or 6-0-0 oc purlins.
BOT CHORD Rigid ceiling directly applied or 6-0-0 oc bracing.

REACTIONS. All bearings 10-4-8.
(lb) - Max Horz 1=-79(LC 8)
Max Uplift All uplift 100 lb or less at joint(s) 6, 7
Max Grav All reactions 250 lb or less at joint(s) 1, 5 except 6=331(LC 20), 7=259(LC 19)

FORCES. (lb) - Max. Comp./Max. Ten. - All forces 250 (lb) or less except when shown.

NOTES-
1) Unbalanced roof live loads have been considered for this design.
2) Wind: ASCE 7-10; Vult=130mph (3-second gust) Vasd=103mph; TCDL=6.0psf; BCDL=6.0psf; h=25ft; Cat. II; Exp B; Enclosed; MWFRS (envelope) gable end zone and C-C Exterior(2) 0-5-12 to 3-5-12, Interior(1) 3-5-12 to 5-3-4, Exterior(2) 5-3-4 to 8-3-4, Interior(1) 8-3-4 to 10-0-12 zone;C-C for members and forces & MWFRS for reactions shown; Lumber DOL=1.60 plate grip DOL=1.60
3) Gable requires continuous bottom chord bearing.
4) This truss has been designed for a 10.0 psf bottom chord live load nonconcurrent with any other live loads.
5) * This truss has been designed for a live load of 20.0psf on the bottom chord in all areas where a rectangle 3-6-0 tall by 2-0-0 wide will fit between the bottom chord and any other members.
6) Provide mechanical connection (by others) of truss to bearing plate capable of withstanding 100 lb uplift at joint(s) 6, 7.

NORTH CAROLINA PROFESSIONAL SEAL 28228 ENGINEER XUEGANG LIU

March 6,2020

WARNING - Verify design parameters and READ NOTES ON THIS AND INCLUDED MITEK REFERENCE PAGE MII-7473 rev. 10/03/2015 BEFORE USE.
Design valid for use only with MiTek® connectors. This design is based only upon parameters shown, and is for an individual building component, not a truss system. Before use, the building designer must verify the applicability of design parameters and properly incorporate this design into the overall building design. Bracing indicated is to prevent buckling of individual truss web and/or chord members only. Additional temporary and permanent bracing is always required for stability and to prevent collapse with possible personal injury and property damage. For general guidance regarding the fabrication, storage, delivery, erection and bracing of trusses and truss systems, see **ANSI/TPI1 Quality Criteria, DSB-89 and BCSI Building Component Safety Information** available from Truss Plate Institute, 218 N. Lee Street, Suite 312, Alexandria, VA 22314.

ENGINEERING BY TRENCO A MiTek Affiliate
818 Soundside Road
Edenton, NC 27932

Job	Truss	Truss Type	Qty	Ply	240.3174.C
23412A	V8	VALLEY	1	1	I40522839 Job Reference (optional)

84 Components (Dunn), Dunn, NC - 28334, 8.330 s Feb 13 2020 MiTek Industries, Inc. Fri Mar 6 11:40:20 2020 Page 1
ID:B_Q7f7Biu7XlherXjarx6dzmHHa-k4bg7p3sTZc0bVxdLZQthQqAsIHMkOidcFta7Izdf9v

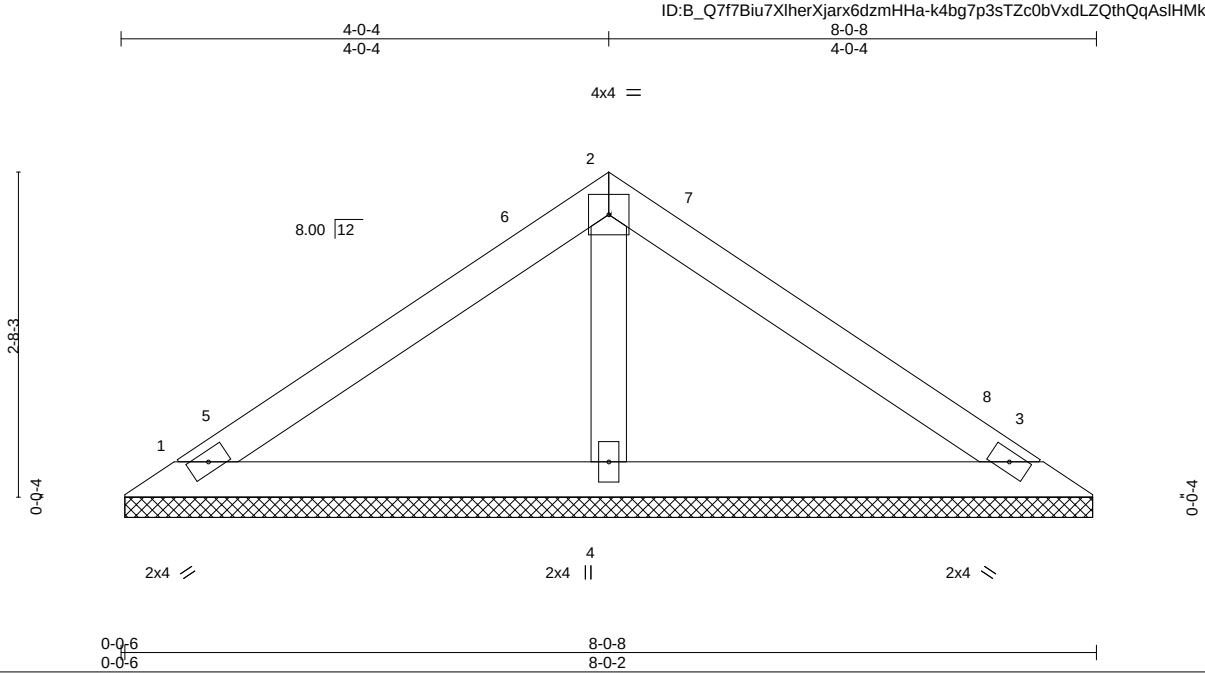

LOADING (psf)		SPACING- 2-0-0		CSI.		DEFL. in (loc) l/defl L/d		PLATES	GRIP
TCLL	20.0	Plate Grip DOL	1.15	TC	0.24	Vert(LL) n/a - n/a 999		MT20	244/190
TCDL	10.0	Lumber DOL	1.15	BC	0.13	Vert(CT) n/a - n/a 999			
BCLL	0.0 *	Rep Stress Incr	YES	WB	0.04	Horz(CT) 0.00 3 n/a n/a			
BCDL	10.0	Code IRC2015/TPI2014		Matrix-P				Weight: 28 lb	FT = 20%

LUMBER-
TOP CHORD 2x4 SP No.2
BOT CHORD 2x4 SP No.2
OTHERS 2x4 SP No.3

BRACING-
TOP CHORD Structural wood sheathing directly applied or 6-0-0 oc purlins.
BOT CHORD Rigid ceiling directly applied or 10-0-0 oc bracing.

REACTIONS. (size) 1=7-11-12, 3=7-11-12, 4=7-11-12
Max Horz 1=-58(LC 10)
Max Uplift 1=-34(LC 12), 3=-42(LC 13)
Max Grav 1=153(LC 1), 3=153(LC 1), 4=261(LC 1)

FORCES. (lb) - Max. Comp./Max. Ten. - All forces 250 (lb) or less except when shown.

NOTES-
1) Unbalanced roof live loads have been considered for this design.
2) Wind: ASCE 7-10; Vult=130mph (3-second gust) Vasd=103mph; TCDL=6.0psf; BCDL=6.0psf; h=25ft; Cat. II; Exp B; Enclosed; MWFRS (envelope) gable end zone and C-C Exterior(2) 0-5-12 to 3-5-12, Interior(1) 3-5-12 to 4-0-4, Exterior(2) 4-0-4 to 7-0-4, Interior(1) 7-0-4 to 7-6-12 zone;C-C for members and forces & MWFRS for reactions shown; Lumber DOL=1.60 plate grip DOL=1.60
3) Gable requires continuous bottom chord bearing.
4) This truss has been designed for a 10.0 psf bottom chord live load nonconcurrent with any other live loads.
5) * This truss has been designed for a live load of 20.0psf on the bottom chord in all areas where a rectangle 3-6-0 tall by 2-0-0 wide will fit between the bottom chord and any other members.
6) Provide mechanical connection (by others) of truss to bearing plate capable of withstanding 100 lb uplift at joint(s) 1, 3.

March 6,2020

WARNING - Verify design parameters and READ NOTES ON THIS AND INCLUDED MITEK REFERENCE PAGE MII-7473 rev. 10/03/2015 BEFORE USE.
Design valid for use only with MiTek® connectors. This design is based only upon parameters shown, and is for an individual building component, not a truss system. Before use, the building designer must verify the applicability of design parameters and properly incorporate this design into the overall building design. Bracing indicated is to prevent buckling of individual truss web and/or chord members only. Additional temporary and permanent bracing is always required for stability and to prevent collapse with possible personal injury and property damage. For general guidance regarding the fabrication, storage, delivery, erection and bracing of trusses and truss systems, see **ANSI/TPI1 Quality Criteria, DSB-89 and BCSI Building Component Safety Information** available from Truss Plate Institute, 218 N. Lee Street, Suite 312, Alexandria, VA 22314.

ENGINEERING BY TRENCO A MiTek Affiliate
818 Soundside Road
Edenton, NC 27932

Job	Truss	Truss Type	Qty	Ply	240.3174.C
23412A	V9	VALLEY	1	1	I40522840 Job Reference (optional)

84 Components (Dunn), Dunn, NC - 28334, 8.330 s Feb 13 2020 MiTek Industries, Inc. Fri Mar 6 11:40:21 2020 Page 1
ID:B_Q7f7Biu7XlherXjarx6dzmHHa-CG92L94UEtktCfWpuHy6DeNNs9aRTrXmrvc7flzdf9u

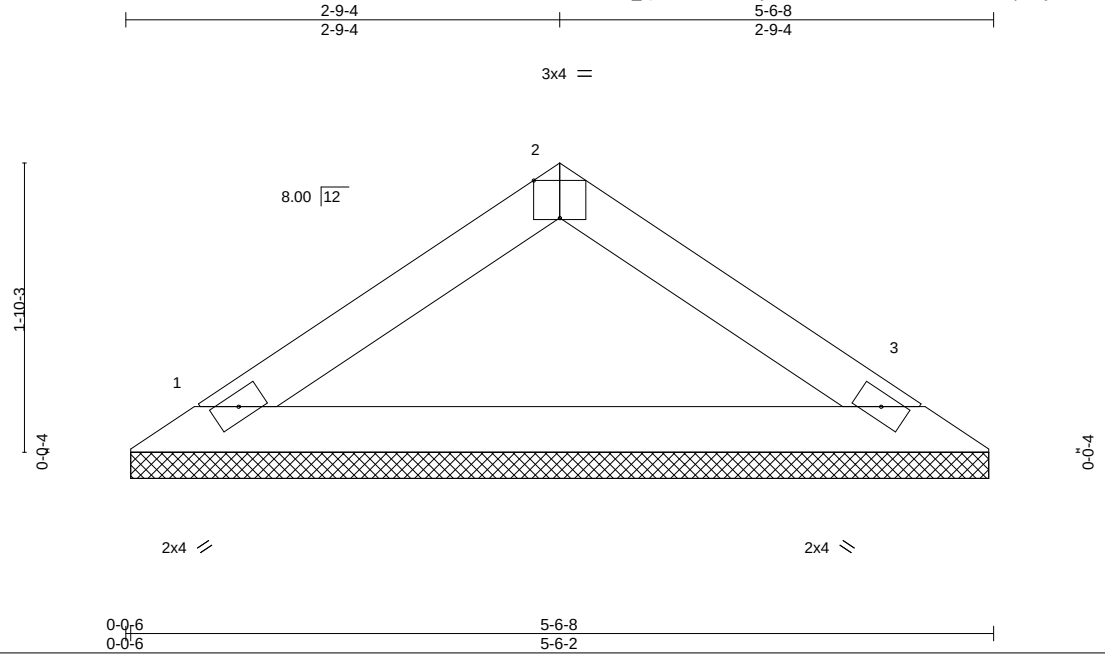

Plate Offsets (X,Y)-- [2:0-2-0,Edge]

LOADING (psf)		SPACING- 2-0-0		CSI.		DEFL. in (loc) l/defl L/d		PLATES	GRIP
TCLL	20.0	Plate Grip DOL	1.15	TC	0.09	Vert(LL) n/a - n/a 999		MT20	244/190
TCDL	10.0	Lumber DOL	1.15	BC	0.26	Vert(CT) n/a - n/a 999			
BCLL	0.0 *	Rep Stress Incr	YES	WB	0.00	Horz(CT) 0.00 3 n/a n/a			
BCDL	10.0	Code IRC2015/TPI2014		Matrix-P				Weight: 16 lb	FT = 20%

LUMBER-
TOP CHORD 2x4 SP No.2
BOT CHORD 2x4 SP No.2

BRACING-
TOP CHORD Structural wood sheathing directly applied or 5-6-8 oc purlins.
BOT CHORD Rigid ceiling directly applied or 10-0-0 oc bracing.

REACTIONS. (size) 1=5-5-12, 3=5-5-12
Max Horz 1=-38(LC 8)
Max Uplift 1=-20(LC 12), 3=-20(LC 13)
Max Grav 1=183(LC 1), 3=183(LC 1)

FORCES. (lb) - Max. Comp./Max. Ten. - All forces 250 (lb) or less except when shown.

NOTES-
1) Unbalanced roof live loads have been considered for this design.
2) Wind: ASCE 7-10; Vult=130mph (3-second gust) Vasd=103mph; TCDL=6.0psf; BCDL=6.0psf; h=25ft; Cat. II; Exp B; Enclosed; MWFRS (envelope) gable end zone and C-C Exterior(2) zone;C-C for members and forces & MWFRS for reactions shown; Lumber DOL=1.60 plate grip DOL=1.60
3) Gable requires continuous bottom chord bearing.
4) This truss has been designed for a 10.0 psf bottom chord live load nonconcurrent with any other live loads.
5) * This truss has been designed for a live load of 20.0psf on the bottom chord in all areas where a rectangle 3-6-0 tall by 2-0-0 wide will fit between the bottom chord and any other members.
6) Provide mechanical connection (by others) of truss to bearing plate capable of withstanding 100 lb uplift at joint(s) 1, 3.

March 6,2020

WARNING - Verify design parameters and READ NOTES ON THIS AND INCLUDED MITEK REFERENCE PAGE MII-7473 rev. 10/03/2015 BEFORE USE.
Design valid for use only with MiTek® connectors. This design is based only upon parameters shown, and is for an individual building component, not a truss system. Before use, the building designer must verify the applicability of design parameters and properly incorporate this design into the overall building design. Bracing indicated is to prevent buckling of individual truss web and/or chord members only. Additional temporary and permanent bracing is always required for stability and to prevent collapse with possible personal injury and property damage. For general guidance regarding the fabrication, storage, delivery, erection and bracing of trusses and truss systems, see **ANSI/TPI1 Quality Criteria, DSB-89 and BCSI Building Component Safety Information** available from Truss Plate Institute, 218 N. Lee Street, Suite 312, Alexandria, VA 22314.

ENGINEERING BY TRENCO A MiTek Affiliate
818 Soundside Road
Edenton, NC 27932

Job	Truss	Truss Type	Qty	Ply	240.3174.C
23412A	V10	VALLEY	1	1	I40522841 Job Reference (optional)

84 Components (Dunn), Dunn, NC - 28334, 8.330 s Feb 13 2020 MiTek Industries, Inc. Fri Mar 6 11:40:16 2020 Page 1

ID:B_Q7f7Biu7XlherXjarx6dzmHHa-rIM9IR0LPK6a6uer6jMxWagXJ8xdoaH1hevM_Xzdf9z

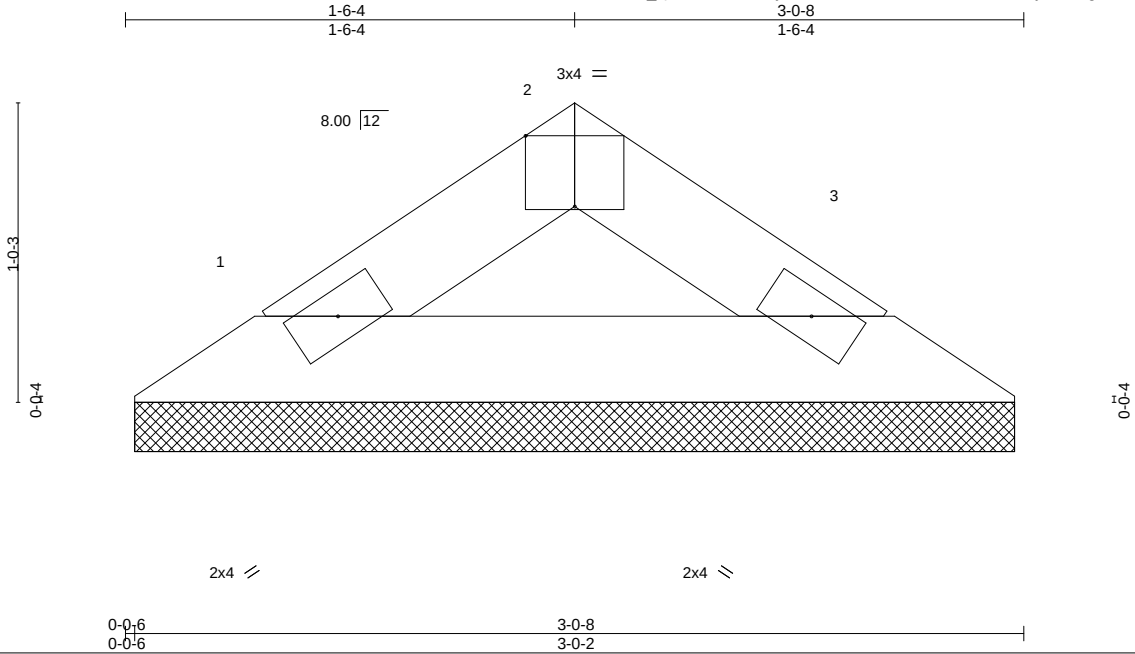

Plate Offsets (X,Y)-- [2:0-2-0,Edge]

LOADING (psf)		SPACING-	2-0-0	CSI.		DEFL.	in	(loc)	l/defl	L/d	PLATES	GRIP
TCLL	20.0	Plate Grip DOL	1.15	TC	0.02	Vert(LL)	n/a	-	n/a	999	MT20	244/190
TCDL	10.0	Lumber DOL	1.15	BC	0.05	Vert(CT)	n/a	-	n/a	999		
BCLL	0.0 *	Rep Stress Incr	YES	WB	0.00	Horz(CT)	0.00	3	n/a	n/a		
BCDL	10.0	Code IRC2015/TPI2014		Matrix-P							Weight: 8 lb	FT = 20%

LUMBER-
TOP CHORD 2x4 SP No.2
BOT CHORD 2x4 SP No.2

BRACING-
TOP CHORD Structural wood sheathing directly applied or 3-0-8 oc purlins.
BOT CHORD Rigid ceiling directly applied or 10-0-0 oc bracing.

REACTIONS. (size) 1=2-11-12, 3=2-11-12
Max Horz 1=17(LC 11)
Max Uplift 1=-9(LC 12), 3=-9(LC 13)
Max Grav 1=83(LC 1), 3=83(LC 1)

FORCES. (lb) - Max. Comp./Max. Ten. - All forces 250 (lb) or less except when shown.

NOTES-
1) Unbalanced roof live loads have been considered for this design.
2) Wind: ASCE 7-10; Vult=130mph (3-second gust) Vasd=103mph; TCDL=6.0psf; BCDL=6.0psf; h=25ft; Cat. II; Exp B; Enclosed; MWFRS (envelope) gable end zone and C-C Exterior(2) zone;C-C for members and forces & MWFRS for reactions shown; Lumber DOL=1.60 plate grip DOL=1.60
3) Gable requires continuous bottom chord bearing.
4) This truss has been designed for a 10.0 psf bottom chord live load nonconcurrent with any other live loads.
5) * This truss has been designed for a live load of 20.0psf on the bottom chord in all areas where a rectangle 3-6-0 tall by 2-0-0 wide will fit between the bottom chord and any other members.
6) Provide mechanical connection (by others) of truss to bearing plate capable of withstanding 100 lb uplift at joint(s) 1, 3.

March 6,2020

WARNING - Verify design parameters and READ NOTES ON THIS AND INCLUDED MITEK REFERENCE PAGE MII-7473 rev. 10/03/2015 BEFORE USE.
Design valid for use only with MiTek® connectors. This design is based only upon parameters shown, and is for an individual building component, not a truss system. Before use, the building designer must verify the applicability of design parameters and properly incorporate this design into the overall building design. Bracing indicated is to prevent buckling of individual truss web and/or chord members only. Additional temporary and permanent bracing is always required for stability and to prevent collapse with possible personal injury and property damage. For general guidance regarding the fabrication, storage, delivery, erection and bracing of trusses and truss systems, see **ANSI/TPI1 Quality Criteria, DSB-89 and BCSI Building Component Safety Information** available from Truss Plate Institute, 218 N. Lee Street, Suite 312, Alexandria, VA 22314.

ENGINEERING BY TRENCO A MiTek Affiliate
818 Soundside Road
Edenton, NC 27932

Symbols

PLATE LOCATION AND ORIENTATION

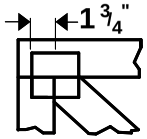

Center plate on joint unless x, y offsets are indicated. Dimensions are in ft-in-sixteenths. Apply plates to both sides of truss and fully embed teeth.

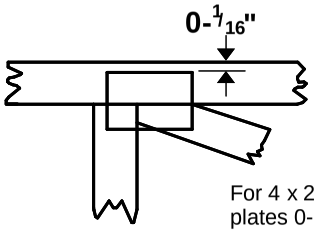

For 4 x 2 orientation, locate plates 0- 1/16" from outside edge of truss.

This symbol indicates the required direction of slots in connector plates.

*** Plate location details available in MiTek 20/20 software or upon request.**

PLATE SIZE

4 x 4

The first dimension is the plate width measured perpendicular to slots. Second dimension is the length parallel to slots.

LATERAL BRACING LOCATION

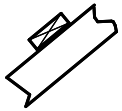

Indicated by symbol shown and/or by text in the bracing section of the output. Use T or I bracing if indicated.

BEARING

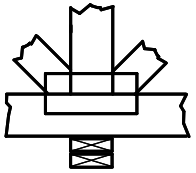

Indicates location where bearings (supports) occur. Icons vary but reaction section indicates joint number where bearings occur. Min size shown is for crushing only.

Industry Standards:

ANSI/TPI1: National Design Specification for Metal Plate Connected Wood Truss Construction.
DSB-89: Design Standard for Bracing.
BCSI: Building Component Safety Information, Guide to Good Practice for Handling, Installing & Bracing of Metal Plate Connected Wood Trusses.

Numbering System

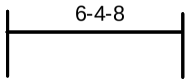

dimensions shown in ft-in-sixteenths
(Drawings not to scale)

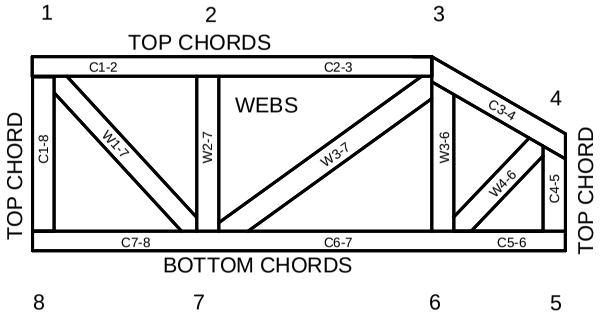

JOINTS ARE GENERALLY NUMBERED/LETTERED CLOCKWISE AROUND THE TRUSS STARTING AT THE JOINT FARTHEST TO THE LEFT.

CHORDS AND WEBS ARE IDENTIFIED BY END JOINT NUMBERS/LETTERS.

PRODUCT CODE APPROVALS

ICC-ES Reports:

ESR-1311, ESR-1352, ESR1988
ER-3907, ESR-2362, ESR-1397, ESR-3282

Trusses are designed for wind loads in the plane of the truss unless otherwise shown.

Lumber design values are in accordance with ANSI/TPI 1 section 6.3 These truss designs rely on lumber values established by others.

© 2012 MiTek® All Rights Reserved

MiTek

ENGINEERING BY TRENCO
A MiTek Affiliate

MiTek Engineering Reference Sheet: MII-7473 rev. 10/03/2015

General Safety Notes

Failure to Follow Could Cause Property Damage or Personal Injury

1. Additional stability bracing for truss system, e.g. diagonal or X-bracing, is always required. See BCSI.
2. Truss bracing must be designed by an engineer. For wide truss spacing, individual lateral braces themselves may require bracing, or alternative Tor I bracing should be considered.
3. Never exceed the design loading shown and never stack materials on inadequately braced trusses.
4. Provide copies of this truss design to the building designer, erection supervisor, property owner and all other interested parties.
5. Cut members to bear tightly against each other.
6. Place plates on each face of truss at each joint and embed fully. Knots and wane at joint locations are regulated by ANSI/TPI 1.
7. Design assumes trusses will be suitably protected from the environment in accord with ANSI/TPI 1.
8. Unless otherwise noted, moisture content of lumber shall not exceed 19% at time of fabrication.
9. Unless expressly noted, this design is not applicable for use with fire retardant, preservative treated, or green lumber.
10. Camber is a non-structural consideration and is the responsibility of truss fabricator. General practice is to camber for dead load deflection.
11. Plate type, size, orientation and location dimensions indicated are minimum plating requirements.
12. Lumber used shall be of the species and size, and in all respects, equal to or better than that specified.
13. Top chords must be sheathed or purlins provided at spacing indicated on design.
14. Bottom chords require lateral bracing at 10 ft. spacing, or less, if no ceiling is installed, unless otherwise noted.
15. Connections not shown are the responsibility of others.
16. Do not cut or alter truss member or plate without prior approval of an engineer.
17. Install and load vertically unless indicated otherwise.
18. Use of green or treated lumber may pose unacceptable environmental, health or performance risks. Consult with project engineer before use.
19. Review all portions of this design (front, back, words and pictures) before use. Reviewing pictures alone is not sufficient.
20. Design assumes manufacture in accordance with ANSI/TPI 1 Quality Criteria.