95%

CIVIL SITE PLANS
FOR
SAMET
HARNETT COUNTY 1

DUNN, NORTH CAROLINA
HARNETT COUNTY

SHEET LIST

SHEET #	TITLE
C0.0	COVER SHEET
C1.0	SITE PLAN
C1.1	GENERAL NOTES
C1.2	EXISTING CONDITIONS
C2.0	OVERALL STORMWATER
C2.1	DRAINAGE AREAS
C2.2	POND PROFILE
C2.3	DRAINAGE DETAIL
C3.0	OVERALL SITE GRADING
C4.0	OVERALL WATER AND SEWER
C4.1	SANITARY SEWER PROFILE
C5.0	CONSTRUCTION DETAILS
C5.1	CONSTRUCTION DETAILS
C5.2	CONSTRUCTION DETAILS
C5.3	CONSTRUCTION DETAILS
C5.4	CONSTRUCTION DETAILS
C5.5	CONSTRUCTION DETAILS
C5.6	CONSTRUCTION DETAILS
C5.7	CONSTRUCTION DETAILS
C5.8	CONSTRUCTION DETAILS
C5.9	CONSTRUCTION DETAILS
C5.10	CONSTRUCTION DETAILS
C5.11	CONSTRUCTION DETAILS
C5.12	CONSTRUCTION DETAILS
E.03	LIGHTING PLAN
LA	LANDSCAPE PLAN
EC	SEDIMENTATION AND EROSION CONTROL PLANS
	ARCHITECTURAL ELEVATIONS

UTILITY OWNER:
POWER:
WATER AND SEWER: HARNETT COUNTY WATER AND SEWER

PRELIMINARY

RIVER BASIN: CAPE FEAR
RECEIVING STREAM: CAPE FEAR RIVER (ULTIMATE)
CLASSIFICATION: SC

SAFETY IS IN YOUR HANDS.
EVERY DIG. EVERY TIME.

TC²
ENGINEERING, PLLC
201 N. Front Street
Suite M-108
Wilmington, NC 28401
910-547-5856

NO.	REVISION	DATE

SAMET HARNETT COUNTY 1

COVER SHEET

BRIAN P. ENSIG

DATE: JULY 2025
SCALE NTS
DRAWN: BPE
CHECKED: WPC
PROJECT NO.:

SHEET:
C0.0

NOTES:
1. NO GENERATION OF DUST, ODORS, NOISE, VIBRATION OR ELECTRICAL INTERFERENCE OR FLUCTUATION SHALL BE PERCEPTIBLE BEYOND THE PROPERTY LINES.
2. ALL ESTABLISHMENTS SHALL BE MAINTAINED SO AS NOT TO CREATE ENVIRONMENTAL HAZARDS (SUCH AS OIL OR GAS LEAKS OR SPILLS) THAT POSE A THREAT TO GROUND OR SURFACE WATER QUALITY, AIR QUALITY, WILDLIFE AND/OR HUMANS.

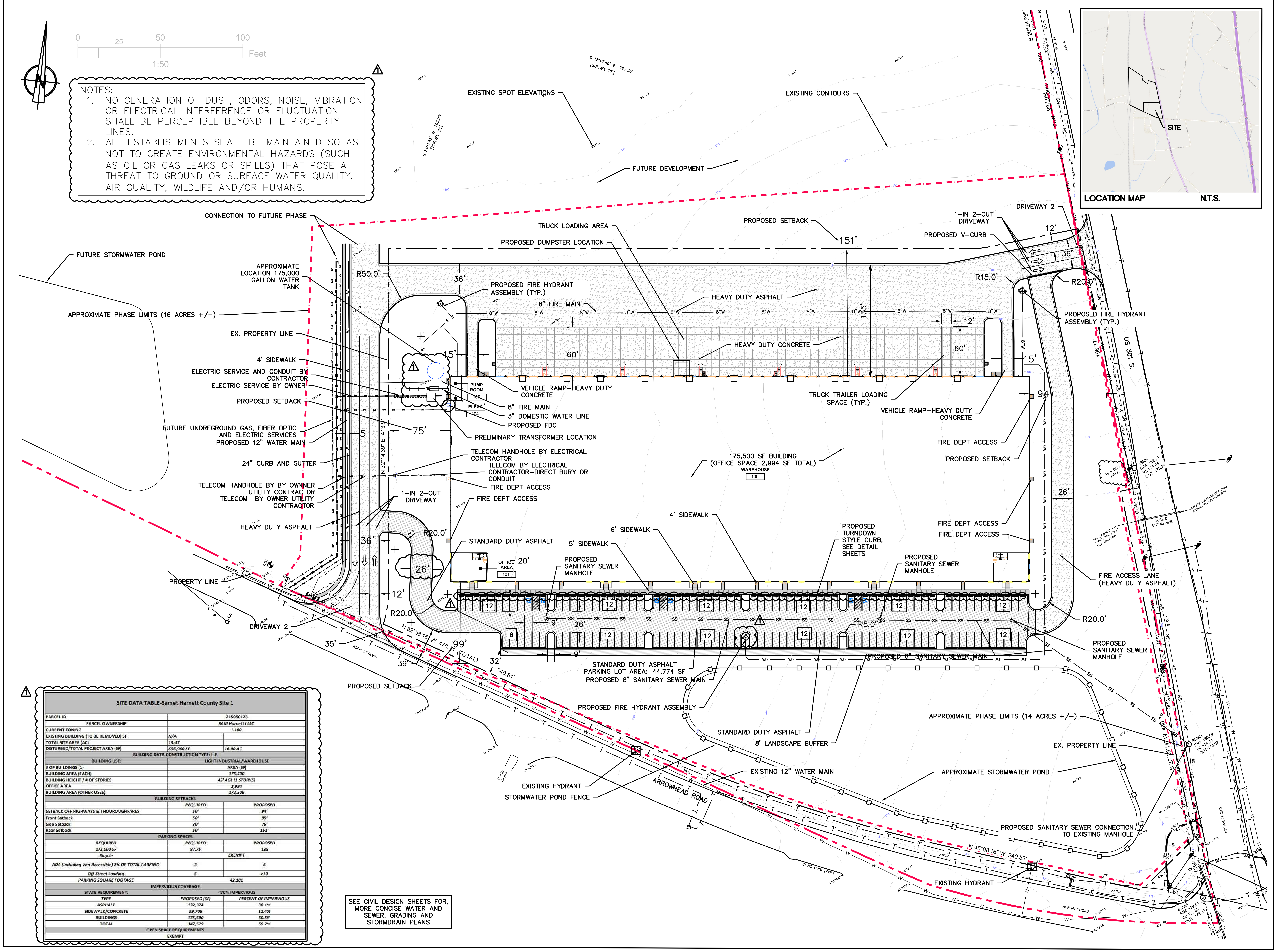
0 25 50 100 Feet
1:50
N
EXISTING SPOT ELEVATIONS
EXISTING CONTOURS
FUTURE DEVELOPMENT
S 38°47'40" E 767.55' [SURVEY TIE]
S 54°11'53" W 295.20' [SURVEY TIE]
S 20°24'23" W
LOCATION MAP
N.T.S.
SITE
CONNECTION TO FUTURE PHASE
FUTURE STORMWATER POND
APPROXIMATE LOCATION 175,000 GALLON WATER TANK
APPROXIMATE PHASE LIMITS (16 ACRES +/–)
EX. PROPERTY LINE
4' SIDEWALK
ELECTRIC SERVICE AND CONDUIT BY CONTRACTOR
ELECTRIC SERVICE BY OWNER
PROPOSED SETBACK
FUTURE UNDERGROUND GAS, FIBER OPTIC AND ELECTRIC SERVICES
PROPOSED 12" WATER MAIN
24" CURB AND GUTTER
TELECOM HANDHOLE BY BY OWNER UTILITY CONTRACTOR
TELECOM BY OWNER UTILITY CONTRACTOR
HEAVY DUTY ASPHALT
PROPERTY LINE
DRIVEWAY 2
TRUCK LOADING AREA
PROPOSED DUMPSTER LOCATION
PROPOSED FIRE HYDRANT ASSEMBLY (TYP.)
8" FIRE MAIN
HEAVY DUTY CONCRETE
PUMP ROOM
ELEC.
VEHICLE RAMP–HEAVY DUTY CONCRETE
3" DOMESTIC WATER LINE
PROPOSED FDC
PRELIMINARY TRANSFORMER LOCATION
TELECOM HANDHOLE BY ELECTRICAL CONTRACTOR
TELECOM BY ELECTRICAL CONTRACTOR–DIRECT BURY OR CONDUIT
FIRE DEPT ACCESS
1–IN 2–OUT DRIVEWAY
STANDARD DUTY ASPHALT
OFFICE AREA 101
175,500 SF BUILDING (OFFICE SPACE 2,994 SF TOTAL)
WAREHOUSE 100
4' SIDEWALK
6' SIDEWALK
5' SIDEWALK
PROPOSED SANITARY SEWER MANHOLE
PROPOSED TURNDOWN STYLE CURB, SEE DETAIL SHEETS
STANDARD DUTY ASPHALT PARKING LOT AREA: 44,774 SF
PROPOSED 8" SANITARY SEWER MAIN
PROPOSED FIRE HYDRANT ASSEMBLY
STANDARD DUTY ASPHALT
8' LANDSCAPE BUFFER
EXISTING 12" WATER MAIN
EXISTING HYDRANT
STORMWATER POND FENCE
ARROWHEAD ROAD
APPROXIMATE PHASE LIMITS (14 ACRES +/–)
EX. PROPERTY LINE
APPROXIMATE STORMWATER POND
PROPOSED SANITARY SEWER CONNECTION TO EXISTING MANHOLE
EXISTING HYDRANT
N 45°08'16" W 240.53'
N 32°58'16" W 476.71' (TOTAL)
340.81'
135.30'
N 32°14'39" E 413.51'
PROPOSED SETBACK
PROPOSED 8" SANITARY SEWER MAIN
FIRE ACCESS LANE (HEAVY DUTY ASPHALT)
PROPOSED SANITARY SEWER MANHOLE
TRUCK TRAILER LOADING SPACE (TYP.)
VEHICLE RAMP–HEAVY DUTY CONCRETE
PROPOSED SETBACK
PROPOSED V–CURB
1–IN 2–OUT DRIVEWAY
DRIVEWAY 2
PROPOSED SETBACK
US 301 S.
198.77'
SSMH
ASPHALT ROAD
CONC. CURB (TYP.)
WOODED AREA
BURIED STORM PIPE
151'
135'
36'
60'
15'
12'
94
75'
5
26'
20'
99'
32'
39'
35'
9'
R50.0'
R20.0'
R15.0'
R5.0'
12
6

SITE DATA TABLE-Samet Harnett County Site 1		
PARCEL ID	215050123	
PARCEL OWNERSHIP	SAM Harnett I LLC	
CURRENT ZONING	I-100	
EXISTING BUILDING (TO BE REMOVED) SF	N/A	
TOTAL SITE AREA (AC)	13.47	
DISTURBED/TOTAL PROJECT AREA (SF)	696,960 SF	16.00 AC
BUILDING DATA-CONSTRUCTION TYPE: II-B		
BUILDING USE:	LIGHT INDUSTRIAL/WAREHOUSE	
# OF BUILDINGS (1)	AREA (SF)	
BUILDING AREA (EACH)	175,500	
BUILDING HEIGHT / # OF STORIES	45' AGL (1 STORYS)	
OFFICE AREA	2,994	
BUILDING AREA (OTHER USES)	172,506	
BUILDING SETBACKS		
	REQUIRED	PROPOSED
SETBACK OFF HIGHWAYS & THOUROUGHFARES	50'	94'
Front Setback	50'	99'
Side Setback	30'	75'
Rear Setback	50'	151'
PARKING SPACES		
REQUIRED	REQUIRED	PROPOSED
1/2,000 SF	87.75	138
Bicycle	EXEMPT	
ADA (Including Van-Accessible) 2% OF TOTAL PARKING	3	6
Off-Street Loading	5	>10
PARKING SQUARE FOOTAGE	42,101	
IMPERVIOUS COVERAGE		
STATE REQUIREMENT:	<70% IMPERVIOUS	
TYPE	PROPOSED (SF)	PERCENT OF IMPERVIOUS
ASPHALT	132,374	38.1%
SIDEWALK/CONCRETE	39,705	11.4%
BUILDINGS	175,500	50.5%
TOTAL	347,579	59.2%
OPEN SPACE REQUIREMENTS		
EXEMPT		

SEE CIVIL DESIGN SHEETS FOR, MORE CONCISE WATER AND SEWER, GRADING AND STORMDRAIN PLANS

TC²
ENGINEERING, PLLC
201 N. Front Street
Suite M-108
Wilmington, NC 28401
910-547-5856

NO.	REVISION	DATE
1	REVISED PER COMMENTS	7/16/15

SAMET HARNETT COUNTY 1

SITE PLAN

ORIGINAL MAP SIZE 24" X 36"
DRAWN: BPE
CHECKED: WPC
PROJECT NO.:

SHEET:
C1.0

CONTRACTOR NOTES:

1. THE CONTRACTOR IS REQUIRED TO OBTAIN ANY/ALL PERMITS REQUIRED FOR CONSTRUCTION OF THESE PLANS.
2. ALL CONSTRUCTION TO BE IN ACCORDANCE WITH PERMITS ISSUED AND WITH TOWN OF LELAND, AND THE STATE OF NORTH CAROLINA.
3. THE CONTRACTOR IS TO ESTABLISH AND CHECK ALL HORIZONTAL AND VERTICAL CONTROLS TO BE USED WITH THE PROJECT. IN ADDITION, THE CONTRACTOR IS TO COMPUTE THE LAYOUT OF THE ENTIRE SITE PLAN IN ADVANCE OF BEGINNING ANY WORK ASSOCIATED WITH THE SUBJECT PLANS. CONTRACTOR SHALL EMPLOY A PROFESSIONAL SURVEYOR TO PERFORM SITE IMPROVEMENT STAKEOUT(S).
4. ANYTIME WORK IS PERFORMED OFF-SITE OR WITHIN AN EXISTING EASEMENT, THE CONTRACTOR IS TO NOTIFY THE HOLDER OF SAID EASEMENT AS TO THE NATURE OF PROPOSED WORK, AND TO FOLLOW ANY GUIDELINES OR STANDARDS WHICH ARE ASSOCIATED WITH OR REFERENCED IN THE RECORDED EASEMENT.
5. CONTRACTOR SHALL REFER TO ARCHITECTURAL DRAWINGS BY OTHERS FOR ALL BUILDING DIMENSIONS AND DETAILS.

GENERAL NOTES:

1. BOUNDARY AND EXISTING CONDITIONS SURVEY COMPLETED BY BATEMAN CIVIL SURVEYING, INC., AND TREE INVENTORY AND TOPOGRAPHIC SURVEY COMPLETED BY BATEMAN CIVIL SURVEYING, INC. THE SURVEY SHALL BE FIELD VERIFIED BY CONTRACTOR AND ANY DISCREPANCIES REPORTED TO THE OWNER AND ENGINEER.
2. REASONABLE CARE HAS BEEN EXERCISED IN SHOWING THE LOCATION OF EXISTING UTILITIES ON THE PLANS. THE EXACT LOCATION OF ALL EXISTING UTILITIES IS NOT KNOWN IN ALL CASES. THE CONTRACTOR SHALL EXPLORE THE AREA AHEAD OF DITCHING OPERATIONS BY OBSERVATIONS, ELECTRONIC DEVICES, HAND DIGGING AND BY PERSONAL CONTACT WITH THE UTILITY COMPANIES. IN ORDER TO LOCATE EXISTING UTILITIES IN ADVANCE OF TRENCHING OPERATIONS SO AS TO ELIMINATE OR MINIMIZE DAMAGE TO EXISTING UTILITIES. THE CONTRACTOR SHALL BE RESPONSIBLE FOR ALL COSTS RESULTING FROM ANY DAMAGE TO THE EXISTING UTILITY LINES INCLUDING LOSS OF UTILITY REVENUES. CONTRACTOR SHALL ARRANGE FOR TEMPORARY SUPPORT OF EXISTING UTILITIES, SUCH AS POLES, CONDUITS, FIBER OPTIC CABLES, TELEPHONE CABLES, WATER LINES, ETC.
3. CONTRACTOR SHALL COMPLY WITH THE LATEST REVISIONS AND INTERPRETATIONS OF THE DEPARTMENT OF LABOR SAFETY AND HEALTH REGULATIONS FOR CONSTRUCTION PROMULGATED UNDER THE OCCUPATIONAL SAFETY AND HEALTH ACT.
4. CONTRACTOR SHALL PLAN AND CONSTRUCT WORK SO AS TO CAUSE MINIMUM INCONVENIENCE TO THE OWNER AND THE PUBLIC. THE CONTRACTOR SHALL PROVIDE, ERECT AND MAINTAIN AT ALL TIMES DURING THE PROGRESS OR TEMPORARY SUSPENSION OF WORK, SUITABLE BARRIERS, FENCES, SIGNS OR OTHER ADEQUATE PROTECTION, INCLUDING FLAGMEN AND WATCHMEN AS NECESSARY TO INSURE THE SAFETY OF THE PUBLIC AS WELL AS THOSE ENGAGED IN THE CONSTRUCTION WORK. CONSTRUCTION SIGNING SHALL BE IN ACCORDANCE WITH THE LATEST EDITION OF "CONSTRUCTION AND MAINTENANCE OPERATIONS SUPPLEMENT TO THE MANUAL ON UNIFORM TRAFFIC CONTROL DEVICES" BY THE USDOT.
5. ALL MATERIAL CLEARED OR DEMOLISHED BY THE CONTRACTOR IN ORDER TO CONSTRUCT THE WORK SHALL BECOME THE PROPERTY OF THE CONTRACTOR AND SHALL BE PROPERLY DISPOSED OF OFF-SITE.
6. ALL WORK BY THE CONTRACTOR SHALL BE WARRANTED BY THE CONTRACTOR FOR A PERIOD OF ONE YEAR AFTER THE OWNER ACCEPTS THE WORK.
7. CONTRACTOR SHALL CALL THE NORTH CAROLINA ONE-CALL CENTER AT 811 AND ALLOW THE CENTER TO LOCATE EXISTING UTILITIES BEFORE DIGGING.
8. ANY DISCREPANCY IN THIS PLAN AND ACTUAL FIELD CONDITIONS SHALL BE REPORTED TO THE OWNER PRIOR TO START OF CONSTRUCTION. GENERAL CONTRACTOR SHALL BE RESPONSIBLE FOR VERIFICATION OF ALL SETBACKS, EASEMENTS AND DIMENSIONS SHOWN HEREON BEFORE BEGINNING CONSTRUCTION.
9. CONTRACTOR SHALL MAINTAIN THE SITE IN A MANNER SO THAT WORKMEN AND PUBLIC SHALL BE PROTECTED FROM INJURY, AND ADJOINING PROPERTY PROTECTED FROM DAMAGE.
10. ACCESS TO UTILITIES, FIRE HYDRANTS, STREET LIGHTING, ETC., SHALL REMAIN UNDISTURBED, UNLESS COORDINATED WITH THE ENGINEER AND RESPECTIVE UTILITY.
11. THE GENERAL CONTRACTOR SHALL REMOVE ALL DEBRIS FROM THE SITE UPON COMPLETION OF THE PROJECT AND AT LEAST ONCE A WEEK DURING CONSTRUCTION.
12. THE CONTRACTOR IS RESPONSIBLE FOR SECURING THE LOADS ON ALL DUMPTRUCKS AND REFUSE TRANSPORT VEHICLES, TARPS MUST BE UTILIZED. CONTRACTOR SHALL BE RESPONSIBLE FOR KEEPING THE STREET CLEAN AND FREE OF DEBRIS AT ALL TIMES.
13. THE CONTRACTOR SHALL KEEP THE AREA OUTSIDE THE "LIMITS OF DISTURBANCE" BROOM CLEAN AT ALL TIMES.
14. ALL STREET SURFACES, DRIVEWAYS, CULVERTS, CURB AND GUTTERS, ROADSIDE DRAINAGE DITCHES AND OTHER STRUCTURES THAT ARE DISTURBED OR DAMAGED IN ANY MANNER AS A RESULT OF CONSTRUCTION SHALL BE REPLACED OR REPAIRED IN ACCORDANCE WITH THE SPECIFICATIONS.
15. CONTRACTOR SHALL MAINTAIN AN "AS-BUILT" SET OF DRAWINGS TO RECORD THE EXACT LOCATION OF ALL PIPING PRIOR TO CONCEALMENT. DRAWINGS SHALL BE GIVEN TO THE OWNER UPON COMPLETION OF THE PROJECT WITH A COPY OF THE TRANSMITTAL LETTER TO THE ENGINEER.
16. IF DEPARTURES FROM THE SPECIFICATIONS OR DRAWINGS ARE DEEMED NECESSARY BY THE CONTRACTOR, DETAILS OF SUCH DEPARTURES AND REASONS THEREOF SHALL BE GIVEN TO THE OWNER FOR REVIEW, NO DEPARTURES FROM THE CONTRACT DOCUMENTS SHALL BE MADE WITHOUT THE PERMISSION OF THE OWNER, TOWN OF CAROLINA BEACH OR STATE OF NORTH CAROLINA, RESPECTIVELY.
17. CONTRACTOR SHALL VERIFY LOCATION AND ELEVATION OF ALL UNDERGROUND UTILITIES. THE LOCATION OF ALL EXISTING UTILITIES ARE NOT NECESSARILY SHOWN ON PLANS AND WHERE SHOWN ARE ONLY APPROXIMATE. THE CONTRACTOR SHALL ON HIS INITIATIVE AND AT NO EXTRA COST HAVE LOCATED ALL UNDERGROUND LINES AND STRUCTURES AS NECESSARY. NO CLAIMS FOR DAMAGES OR EXTRA COMPENSATION SHALL ACCRUE TO THE CONTRACTOR FROM THE PRESENCE OF SUCH PIPE OTHER OBSTRUCTIONS OR FROM DELAY DUE TO REMOVAL OR REARRANGEMENT OF THE SAME. THE CONTRACTOR SHALL BE RESPONSIBLE FOR ANY DAMAGE TO UNDERGROUND STRUCTURES. CONTACT NORTH CAROLINA ONE CALL" TOLL FREE 1-800-632-4949 AT LEAST 48 HOURS PRIOR TO CONSTRUCTION. THE CONTRACTOR IS RESPONSIBLE FOR CONTACTING ALL NONSUBSCRIBING UTILITIES.
18. THE CONTRACTOR SHALL OBTAIN AND PAY FOR ALL INSPECTIONS, CERTIFICATIONS, EQUIPMENT, ETC., THAT MAY BE REQUIRED.
19. THE ENGINEER AND/OR OWNER DISCLAIM ANY ROLE IN THE CONSTRUCTION MEANS AND METHODS ASSOCIATED WITH THE PROJECT AS SET FORTH IN THESE PLANS.
20. ALL LOT STRIPING AND DIRECTIONAL ARROWS TO BE REFLECTIVE MARKINGS AND SHALL CONFORM TO MUTCD. ALL PARKING STALL MARKINGS AND LANE ARROWS WITHIN THE PARKING AREAS SHALL BE WHITE.
21. LANDSCAPE PLANTINGS AT ENTRANCE/ EXITS WILL BE INSTALLED AND MAINTAINED SO AS NOT TO INTERFERE WITH SIGHT DISTANCE NEEDS OF DRIVERS IN THE PARKING AREA AND AT ENTRANCE/EXIT LOCATIONS PER LOCAL STANDARDS.
22. ALL DIMENSIONS AND RADII ARE TO OUTSIDE FACE OF BUILDING OR TO FACE OF CURB UNLESS OTHERWISE NOTED.

GENERAL DEMOLITION NOTES:

1. CONTRACTOR TO COORDINATE WITH THE OWNER TO PROPERLY MAINTAIN OR RELOCATE EXISTING SERVICE CONNECTIONS WHEN NECESSARY.
2. CONTRACTOR IS TO WALK THE SITE AND BECOME FAMILIAR WITH THE SCOPE OF DEMOLITION REQUIRED. ALL DEMOLITION WORK REQUIRED TO CONSTRUCT NEW SITE IMPROVEMENTS WILL BE PERFORMED BY THE CONTRACTOR AND WILL BE CONSIDERED UNCLASSIFIED EXCAVATION.
3. DEMOLITION SHALL INCLUDE BUT IS NOT LIMITED TO THE EXCAVATION, HAULING AND OFFSITE DISPOSAL OF CONCRETE PADS, CONCRETE DITCHES, FOUNDATIONS, SLABS, STEPS, AND STRUCTURES; ABANDONED UTILITIES, BUILDINGS, PAVEMENTS AND ALL MATERIALS CLEARED AND STRIPPED TO THE EXTENT NECESSARY AS DIRECTED BY THE GEOTECHNICAL ENGINEER FOR THE INSTALLATION OF THE NEW IMPROVEMENTS AND WITHIN THE LIMITS OF CLEARING AND GRADING AND AS SHOWN ON THESE PLANS.
4. THE CONTRACTOR SHALL PROTECT ALL ADJACENT PROPERTY, STRUCTURES AND UTILITIES ON THE PROPERTY NOT TO BE DEMOLISHED. DAMAGE TO PROPERTIES OF OTHERS DUE TO THE CONTRACTOR'S ACTIVITIES SHALL BE REPLACED IN KIND BY THE CONTRACTOR AT NO COST TO OWNER.
5. ELECTRIC, TELEPHONE, SANITARY SEWER, WATER AND STORM SEWER UTILITIES THAT SERVICE OFF-SITE PROPERTIES SHALL BE MAINTAINED DURING THE CONSTRUCTION PROCESS BY THE CONTRACTOR.
6. THE CONTRACTOR SHALL PRODUCE A PHOTOGRAPHIC RECORD (DIGITAL) OF DEVELOPMENT COMMENCING WITH A RECORD OF THE SITE AS IT APPEARS BEFORE DEMOLITION HAS BEGUN. AFTERWARDS, A PHOTOGRAPHIC RECORD SHALL BE MAINTAINED WEEKLY DURING CONSTRUCTION AND ENDING WITH A PHOTOGRAPHIC RECORD OF THE DEVELOPMENT AS IT APPEARS AFTER DEMOLITION. THIS RECORD SHALL BE DELIVERED TO THE OWNER.
7. EXISTING CURB AND GUTTER, LIGHTS, SIDEWALK, AND UTILITIES NOT INTENDED FOR DEMOLITION SHALL BE MAINTAINED, PROTECTED AND UNDISTURBED DURING DEMOLITION.
8. ALL EXISTING IMPROVEMENTS INDICATED OR REQUIRED TO BE DEMOLISHED SHALL INCLUDE REMOVAL FROM THE PROPERTY AND PROPER DISPOSAL.
9. CONTRACTOR SHALL COORDINATE RELOCATION OF ALL EXISTING OVERHEAD AND UNDERGROUND UTILITIES INCLUDING CABLE, GAS, TELEPHONE AND ELECTRIC AND ANY OTHER UTILITIES THROUGH THE SITE WITH THE RESPECTIVE COMPANIES.
10. CONTRACTOR SHALL MAINTAIN REQUIRED DISTANCES FROM HIGH VOLTAGE OVERHEAD LINES AND REMOVE TREES SO THEY DO NOT FALL TOWARDS OVERHEAD ELECTRICITY.
11. PROVIDE SMOOTH SAW CUT OF EXISTING PAVEMENTS, CURBS AND GUTTERS AND SIDEWALKS TO BE DEMOLISHED.
12. ALL DEMOLITION WORK SHALL BE DONE IN STRICT ACCORDANCE WITH LOCAL, STATE AND FEDERAL REGULATIONS AS WELL AS OSHA REGULATIONS.
13. EXISTING FIRE HYDRANTS ON OR NEAR THE SITE ARE TO REMAIN IN SERVICE.
14. INFORMATION CONCERNING UNDERGROUND UTILITIES WAS OBTAINED FROM AVAILABLE RECORDS, BUT THE CONTRACTOR MUST DETERMINE THE EXACT LOCATION AND ELEVATIONS.

GENERAL EROSION CONTROL NOTES:

1. THE EROSION CONTROL PLAN SHALL INCLUDE PROVISIONS FOR GROUNDCOVER ON ALL EXPOSED PERIMETER DIKES, SWALES, DITCHES, PERIMETER SLOPES AND ALL SLOPES STEEPER THAN 3:1 WITHIN 7 CALENDAR DAYS FROM THE LAST LAND DISTURBING ACTIVITY. GROUND COVER SHALL BE PROVIDED ON ALL OTHER DISTURBED AREAS WITHIN 14 CALENDAR DAYS FROM THE LAST LAND DISTURBING ACTIVITY.
2. UNLESS OTHERWISE INDICATED, ALL VEGETATIVE AND STRUCTURAL EROSION AND SEDIMENT CONTROL MEASURES SHALL BE CONSTRUCTED AND MAINTAINED IN ACCORDANCE WITH THE MINIMUM STANDARDS AND SPECIFICATIONS OF THE NORTH CAROLINA EROSION AND SEDIMENT CONTROL HANDBOOK. (NO SEPARATE PAYMENT).
3. THE CONTRACTOR SHALL NOTIFY PLAN APPROVING AUTHORITY ONE WEEK PRIOR TO THE PRE-CONSTRUCTION CONFERENCE, ONE WEEK PRIOR TO THE COMMENCEMENT OF LAND DISTURBING ACTIVITY, AND ONE WEEK PRIOR TO FINAL INSPECTION.
4. ALL EROSION AND SEDIMENT CONTROL MEASURES ARE TO BE PLACED PRIOR TO CLEARING AND/OR LAND DISTURBANCE.
5. A COPY OF THE APPROVED EROSION AND SEDIMENT CONTROL PLAN AND PERMIT SHALL BE MAINTAINED ON THE SITE AT ALL TIMES.
6. PRIOR TO COMMENCING LAND DISTURBING ACTIVITIES IN AREAS OTHER THAN INDICATED ON THESE PLANS (INCLUDING, BUT NOT LIMITED TO OFF-SITE BORROW OR WASTE AREAS STAGING OR STORAGE AREAS), THE CONTRACTOR SHALL PREPARE AND SUBMIT A SUPPLEMENTARY EROSION CONTROL PLAN TO THE OWNER FOR REVIEW AND TO TOWN OF LELAND FOR APPROVAL. CONTRACTOR SHALL PAY ALL FEES REQUIRED AND SHALL INSTALL NECESSARY MEASURES AT NO SEPARATE PAYMENT. THE CONTRACTOR SHALL PROVIDE THE OWNER AND THE ENGINEER A COPY OF THE AMENDED PERMIT.
7. THE CONTRACTOR IS RESPONSIBLE FOR INSTALLATION OF ANY ADDITIONAL EROSION CONTROL MEASURES NECESSARY TO PREVENT EROSION AND SEDIMENTATION AS DETERMINED BY EITHER THE REVIEWING AGENCY OR THE ENGINEER. (NO SEPARATE PAYMENT).
8. ALL DISTURBED AREAS ARE TO DRAIN TO APPROVED SEDIMENT CONTROL MEASURES AT ALL TIMES DURING LAND DISTURBING ACTIVITIES AND DURING SITE DEVELOPMENT UNTIL FINAL STABILIZATION IS ACHIEVED.
9. ALL AREAS DISTURBED BY CONSTRUCTION UNLESS OTHERWISE IMPROVED SHALL BE SODDED OR SEEDED AS INDICATED AND STABILIZED.
10. DURING DEWATERING OPERATIONS, WATER SHALL BE PUMPED INTO AN APPROVED FILTERING DEVICE PRIOR TO DISCHARGE TO RECEIVING OUTLET.
11. THE CONTRACTOR SHALL INSPECT ALL EROSION CONTROL MEASURES PERIODICALLY AND AFTER EACH RUNOFF-PRODUCING EVENT. ANY NECESSARY REPAIRS OR CLEANUP TO MAINTAIN THE EFFECTIVENESS OF THE EROSION CONTROL DEVICES SHALL BE MADE IMMEDIATELY.
12. ALL TEMPORARY EROSION CONTROL MEASURES SHALL BE REMOVED BY CONTRACTOR ONCE STABILIZATION OR A SUFFICIENT GROUND COVER HAS BEEN ESTABLISHED OR AS DIRECTED BY THE ENGINEER. (NO SEPARATE PAYMENT). NCDEQ'S FINAL APPROVAL IS REQUIRED.
13. TEMPORARY GRAVEL CONSTRUCTION ENTRANCE SHALL BE REQUIRED AT ALL CONSTRUCTION STAGING AREAS AND SITE ENTRANCES.

EROSION CONTROL AND SEQUENCE OF CONSTRUCTION

THESE EROSION CONTROL AND SEQUENCE OF CONSTRUCTION NOTES ARE INTENDED FOR EACH "PHASE" OF CONSTRUCTION. THE ORDER AND STEPS TAKEN MUST BE IMPLEMENTED AS EACH PART OF THE PROJECT IS DEVELOPED; WHETHER AS A WHOLE OR IN PHASES. ANY EROSION CONTROL DEVICES/MEASURES MUST REMAIN IN PLACE UNTIL THE ENTIRE DISTURBANCE IS STABILIZED AND ALL IMPROVEMENTS WITHIN THE DISTURBANCE LIMITS ARE COMPLETE.

GENERAL EROSION CONTROL NOTES:

1. CONSTRUCT TEMPORARY GRAVEL CONSTRUCTION ENTRANCE(S), ESTABLISH THE LIMITS OF DISTURBANCE, TREE PROTECTION FENCING, AND TEMPORARY SILT FENCE.
2. CLEAR AND REMOVE FROM SITE TREES AS DESIGNATED, ROOTS, ROOT MAT, ETC. FROM THE AREA WITHIN THE DESIGNATED CLEARING LIMITS.
3. INSTALL REMAINING EROSION CONTROL MEASURES AS SHOWN ON THE PLANS WITHIN THE AREA DISTURBED. ALL EROSION CONTROL MEASURES MUST BE INSTALLED BEFORE COMMENCING CONSTRUCTION.
4. PLANT GRASS OVER ALL GRADED AREAS WITHIN 14 WORKING DAYS OF CEASE OF ANY GRADING ACTIVITY.
5. IMMEDIATELY UPON THE INSTALLATION OF ANY STORM DRAINAGE CATCH BASIN, DROP INLET, ETC., THE CONTRACTOR SHALL INSTALL INLET PROTECTION TO PREVENT SEDIMENT FROM ENTERING THE DRAINAGE SYSTEM.
6. THE CONTRACTOR SHALL BE RESPONSIBLE FOR CLEANING AND RESTORING TO PRE-CONSTRUCTION CONDITIONS ANY AREAS OUTSIDE THE PROJECT LIMITS THAT MAY INADVERTENTLY BE DAMAGED DUE TO THE FAILURE OF THE EROSION CONTROL MEASURES.
7. DURING GRADING AND AFTER GRADING HAS BEEN COMPLETE, THE CONTRACTOR SHALL CONTINUE TO MAINTAIN PERMANENT AND TEMPORARY EROSION CONTROL MEASURES UNTIL FINAL APPROVAL BY ENGINEER OR EROSION CONTROL INSPECTOR.
8. UPON RECEIVING FINAL APPROVAL, THE CONTRACTOR CAN REMOVE TEMPORARY EROSION CONTROL MEASURES.
9. THE CONTRACTOR SHALL CONTINUE TO WATER, FERTILIZE, MOW AND MAINTAIN GRASS & PLANTED AREAS UNTIL ALL CONSTRUCTION IS COMPLETE.

GENERAL EROSION CONTROL NOTES:

1. ALL EROSION AND SEDIMENT CONTROL PRACTICES WILL BE CHECKED FOR STABILITY AND OPERATION FOLLOWING EVERY RUNOFF- PRODUCING RAINFALL BUT IN NO CASE LESS THAN ONCE EVERY WEEK AND AFTER MAJOR RAIN EVENTS. ANY NEEDED REPAIRS WILL BE MADE IMMEDIATELY TO MAINTAIN ALL PRACTICES AS DESIGNED.
2. ALL CONSTRUCTION ENTRANCES WILL BE PERIODICALLY TOP DRESSED WITH AN ADDITIONAL 2 INCHES OF #4 STONE TO MAINTAIN PROPER DEPTH. ANY SEDIMENT THAT IS TRACKED INTO THE STREET WILL BE IMMEDIATELY REMOVED.
3. SEDIMENT WILL BE REMOVED BEHIND THE SEDIMENT FENCE WHEN IT BECOMES 0.5 FEET DEEP AT THE FENCE. THE SEDIMENT FENCE WILL BE BE REPAIRED AS NECESSARY TO MAINTAIN A BARRIER. SILT FENCE STAKES WILL BE SPACED 6 FEET APART UNLESS A WIRE BACKING IS USED WITH 8 FOOT STAKE SPACING.
4. ALL SEEDED AREAS WILL BE FERTILIZED, RESEEDED AS NECESSARY, AND MULCHED ACCORDING TO SPECIFICATIONS IN THE VEGETATIVE PLAN TO MAINTAIN A VIGOROUS, DENSE VEGETATIVE COVER.
5. INLET PROTECTION – INSPECT WIRE AND ROCK INLET PROTECTION AT LEAST ONCE EVERY 7 DAYS AND AFTER EACH SIGNIFICANT (1/2 INCH OR GREATER) RAINFALL EVENT AND REPAIR IMMEDIATELY. REMOVE SEDIMENT AND RESTORE THE SEDIMENT STORAGE AREA TO ITS ORIGINAL DIMENSIONS WHEN THE SEDIMENT HAS ACCUMULATED TO ONE-HALF THE DESIGN DEPTH OF THE TRAP. PLACE THE SEDIMENT THAT IS REMOVED IN THE DESIGNATED DISPOSAL AREA AND REPLACE THE CONTAMINATED PART OF THE GRAVEL FACING.
6. SEDIMENT BASIN/SEDIMENT TRAPS – REMOVE SEDIMENT AND RESTORE THE BASIN TO ITS ORIGINAL DIMENSIONS WHEN IT ACCUMULATES TO WITHIN ONE HALF OF THE DESIGN DEPTH. PLACE SEDIMENT IN AREA WITH SEDIMENT CONTROLS. CHECK THE EMBANKMENT, SPILLWAYS, AND OUTLET FOR EROSION DAMAGE, PIPING, AND SETTLEMENT. MAKE ALL NECESSARY REPAIRS IMMEDIATELY. REMOVE ALL TRASH AND OTHER DEBRIS FROM THE RISER AND POOL AREA.
7. SEDIMENT BASIN BAFFLES – BAFFLES WILL BE REPAIRED OR REPLACED IF THEY COLLAPSE, TEAR, DECOMPOSE, OR BECOME INEFFECTIVE. THEY WILL BE REPLACED PROMPTLY. SEDIMENT WILL BE REMOVED WHEN DEPOSITS REACH HALF THE HEIGHT OF THE FIRST BAFFLE.
8. SKIMMER – INSPECT SKIMMER AT LEAST ONCE A WEEK AND AFTER EACH RAINFALL TO MAKE SURE THAT THE INTAKE MECHANISM, ORIFICE, OR DISCHARGE PIPE IS NOT CLOGGED WITH TRASH OR SEDIMENT. IF THE BASIN IS DRY, MAKE SURE THAT ANY VEGETATION GROWING ON THE BOTTOM IS NOT HOLDING THE SKIMMER DOWN. TAKE SPECIAL PRECAUTION IN WINTER TO PREVENT THE SKIMMER FROM PLUGGING WITH ICE.
9. OUTLET PROTECTION – INSPECT RIP RAP OUTLET STRUCTURES WEEKLY AND AFTER SIGNIFICANT (21 INCH OR GREATER) RAINFALL EVENTS TO SEE IF ANY EROSION AROUND OR BELOW THE RIP RAP HAS TAKEN PLACE, OR IF STONES HAVE BEEN DISLODGED. IMMEDIATELY MAKE ALL NEEDED REPAIRS TO PREVENT FURTHER DAMAGE.
10. EMERGENCY SPILLWAY / FOREBAY PROTECTION – AFTER EVERY HIGH-WATER EVENT INSPECT THE INTEGRITY OF THE LINED SPILLWAY AND THE ADJACENT EARTHEN BANKS. IMMEDIATELY MAKE ALL NEEDED REPAIRS TO PREVENT FURTHER DAMAGE. REPAIR ANY VOIDS IN THE RIP RAP LINED APRONS, RE-ESTABLISH ANY LOOSE STONES, AND FIX GAPS IN THE ADJACENT VEGETATIVE COVER.
11. TEMPORARY DIVERSION DITCH – INSPECT TEMPORARY DIVERSIONS ONCE A WEEK AND AFTER EVERY RAINFALL. IMMEDIATELY REMOVE SEDIMENT FROM THE FLOW AREA AND REPAIR THE DIVERSION RIDGE. CAREFULLY CHECK OUTLETS AND MAKE TIMELY REPAIRS AS NEEDED. WHEN THE AREA PROTECTED IS PERMANENTLY STABILIZED, REMOVE THE RIDGE AND THE CHANNEL TO BLEND WITH THE NATURAL GROUND LEVEL AND APPROPRIATELY STABILIZE IT.
12. CHECK DAMS-EXCELSIOR OR RIP-RAP SEDIMENT SHALL BE REMOVED FROM THE CHECK DAM WHEN IT REACHES HALF FILLED. CHECK DAMS SHALL BE REPAIRED OR REPLACED WHEN THEY NO LONGER DRAIN AS DESIGNED OR ARE DISLODGED AND CHANNEL SHALL BE REPAIRED OR RUTS, PIPIING AND SETTLEMENT AROUND THE DAM AS NEEDED.
13. SEDIMENT FILTER BAG ON A TEMPORARY PUMP AROUND SYSTEM-INSPECT THE BAG AND ITS CONNECTION TO THE PUMPING APPARATUS TO ENSURE THERE IS NO LEAKAGE FOR THE DURATION OF DE-WATERING ACTIVITIES. IF THE SEDIMENT BAG TEARS OR IS DAMAGED IN ANY WAY DURING CONSTRUCTION OF THE CULVERT CROSSING OR DE-WATERING ACTIVITY, THE CONTRACTOR SHALL REPAIR OR REPLACE THE SEDIMENT BAG IMMEDIATELY.

NORTH CAROLINA ACCESSIBILITY NOTES:

1. SPECIAL ATTENTION SHALL BE GIVEN TO COMPLIANCE WITH AMERICANS WITH DISABILITIES ACT (2010 ADA STANDARDS), THE NORTH CAROLINA BUILDING CODE/ANSI A117.1, AND APPLICABLE LOCAL LAWS & REGULATIONS.
2. IT IS ESSENTIAL THAT CONTRACTORS ARE AWARE OF THE SITE ACCESSIBILITY REQUIREMENTS. PARAMOUNTE ENGINEERING HAS DEVELOPED THESE NOTES AND DETAILS TO ASSURE THAT CONTRACTORS ARE AWARE OF THE REQUIREMENTS AT THE POINT IN TIME WHEN THEY ARE BIDDING THE PROJECT. IN ADDITION, PARAMOUNTE ENGINEERING HAS MADE A POINT IN THESE NOTES AND DETAILS, AS WELL AS IN OUR DRAWINGS, TO PROVIDE SLOPES / GRADES AND DIMENSIONS THAT COMPLY WITH THE AMERICANS WITH DISABILITIES ACT (2010 ADA STANDARDS), THE NORTH CAROLINA BUILDING CODE/ANSI A117.1 AND APPLICABLE LOCAL LAWS & REGULATIONS. IF THESE SLOPES / GRADES AND DIMENSIONS ARE NOT ACHIEVABLE, THE CONTRACTOR IS REQUIRED TO CONTACT THE OWNER IMMEDIATELY AND BEFORE MOVING FORWARD WITH THE WORK.
3. THE CONTRACTOR SHALL NOTIFY PARAMOUNTE ENGINEERING IMMEDIATELY OF ANY CONFLICT BETWEEN THESE NOTES AND DETAILS AND OTHER PROJECT DRAWINGS, WHETHER BY PARAMOUNTE ENGINEERING OR OTHERS. THE CONTRACTOR SHALL NOT PROCEED WITH THE WORK FOR WHICH THE ALLEGED CONFLICT HAS BEEN DISCOVERED UNTIL SUCH ALLEGED CONFLICT HAS BEEN RESOLVED. NO CLAIM SHALL BE MADE BY THE CONTRACTOR FOR DELAY OR DAMAGES AS A RESULT OF RESOLUTION OF ANY SUCH CONFLICT(S).
4. THESE ACCESSIBILITY NOTES AND DETAILS ARE INTENDED TO DEPICT SLOPE AND DIMENSIONAL REQUIREMENTS ONLY. REFER TO SIDEWALK, CURBING, AND PAVEMENT DETAILS FOR ADDITIONAL INFORMATION.

GENERAL ACCESSIBLE ROUTE NOTES:

1. AT LEAST ONE ACCESSIBLE ROUTE SHALL BE PROVIDED WITHIN THE SITE FROM ACCESSIBLE PARKING SPACES AND ACCESSIBLE PASSENGER LOADING ZONES; PUBLIC STREETS OR SIDEWALKS; AND PUBLIC TRANSPORTATION STOPS TO THE ACCESSIBLE BUILDING OR FACILITY ENTRANCE THEY SERVE.
2. AT LEAST ONE ACCESSIBLE ROUTE SHALL CONNECT ACCESSIBLE BUILDINGS, ACCESSIBLE FACILITIES, ACCESSIBLE ELEMENTS, AND ACCESSIBLE SPACES THAT ARE ON THE SAME SITE.
3. WALKING SURFACES THAT ARE PART OF AN ACCESSIBLE ROUTE SHALL HAVE A MAXIMUM RUNNING SLOPE OF 5.0% AND A MAXIMUM CROSS SLOPE OF 2.0%.
4. ANY WALKING SURFACE THAT IS PART OF AN ACCESSIBLE ROUTE WITH A RUNNING SLOPE GREATER THAN 5.0% IS A RAMP AND SHALL COMPLY WITH THE GUIDELINES FOR RAMPS OR CURB RAMPS.
5. TRANSITIONS BETWEEN RAMPS, WALKS, LANDINGS, GUTTERS OR STREETS SHALL BE FLUSHAND FREE OF ABRUPT VERTICAL CHANGES (1/4 INCH MAXIMUM VERTICAL CHANGE IN LEVEL PERMITTED).
6. FLOOR SURFACES SHALL BE STABLE, FIRM AND SLIP RESISTANT.
7. THE MINIMUM CLEAR WIDTH OF EXTERIOR ACCESSIBLE ROUTES SHALL BE FORTY-EIGHT (48) INCHES MINIMUM MEASURED BETWEEN HANDRAILS WHERE HANDRAILS ARE PROVIDED (NC BUILDING CODE 1104.1 & 1104.2).
8. WHERE AN ACCESSIBLE ROUTE MAKES A 180 DEGREE TURN AROUND AN OBJECT THAT IS LESS THAN FORTY-EIGHT (48) INCHES IN WIDTH, CLEAR WIDTH SHALL BE FORTY-TWO (42) INCHES MINIMUM APPROACHING THE TURN, FORTY-EIGHT (48) INCHES MINIMUM DURING THE TURN, AND FORTY-TWO (42) INCHES MINIMUM LEAVING THE TURN. THE CLEAR WIDTH APPROACHING AND LEAVING THE TURN MAY BE THIRTY-SIX (36) INCHES MINIMUM WHEN THE CLEAR WIDTH AT THE TURN IS SIXTY (60) INCHES MINIMUM. .* SEE NOTE 7 ABOVE FOR NC CLEAR WIDTH OF EXTERIOR ACCESSIBLE ROUTES*
9. AN ACCESSIBLE ROUTE WITH A CLEAR WIDTH LESS THAN SIXTY (60) INCHES SHALLPROVIDE PASSING SPACES AT INTERVALS OF TWO HUNDRED (200) FEET MAXIMUM. PASSING SPACES SHALL BE EITHER A SIXTY (60) INCH MINIMUM BY SIXTY (60) INCH MINIMUM SPACE; OR AN INTERSECTION OF TWO (2) WALKING SURFACES THAT PROVIDE A COMPLIANT T-SHAPED TURNING SPACE, PROVIDED THE BASE AND ARMS OF THE T-SHAPED SPACE EXTEND FORTY-EIGHT (48) INCHES MINIMUM BEYOND THE INTERSECTION.
10. DOORS, DOORWAYS AND GATES THAT ARE PART OF AN ACCESSIBLE ROUTE SHALL COMPLY WITH THE AMERICANS WITH DISABILITIES ACT (2010 ADA STANDARDS), THE NORTH CAROLINA BUILDING CODE/ ANSI A117.1, AND APPLICABLE LOCAL LAWS & REGULATIONS.
11. DIRECTIONAL SIGNAGE INDICATING THE ROUTE TO THE NEAREST ACCESSIBLE BUILDING ENTRANCE SHALL BE PROVIDED AT INACCESSIBLE BUILDING ENTRANCES.
12. WHERE POSSIBLE, DRAINAGE INLETS SHALL NOT BE LOCATED ON AN ACCESSIBLE ROUTE. IN THE EVENT THAT A DRAINAGE INLET MUST BE LOCATED ON AN ACCESSIBLE ROUTE, THE GRATE SHALL COMPLY WITH THE AMERICANS WITH DISABILITIES ACT (2010 ADA STANDARDS), A117.1, THE NC BUILDING CODE, AND APPLICABLE LOCAL LAWS & REGULATIONS

GENERAL ACCESSIBLE ROUTE NOTES:

1. ANY PART OF AN ACCESSIBLE ROUTE WITH A RUNNING SLOPE GREATER THAN 5% SHALL BE CONSIDERED A RAMP.
2. THE MAXIMUM RUNNING SLOPE FOR A RAMP SHALL BE 8.33% AND THE MAXIMUM CROSS SLOPE SHALL BE 2.0%.
3. THE CLEAR WIDTH OF AN EXTERIOR RAMP RUN SHALL BE FORTY EIGHT INCHES (NC BUILDING CODE 1104.1). WHERE HANDRAILS ARE PROVIDED ON THE RAMP RUN, THE CLEAR WIDTH SHALL BE MEASURED BETWEEN THE HANDRAILS.
4. THE RISE FOR ANY RAMP RUN SHALL BE THIRTY (30) INCHES MAXIMUM.
5. LANDINGS SHALL BE PROVIDED AT THE TOP AND BOTTOM OF RAMPS. LANDINGS SHALL HAVE A SLOPE NOT STEEPER THAN 2.0% IN ANY DIRECTION. THE LANDING CLEAR WIDTH SHALL BE AT LEAST AS WIDE AS THE WIDEST RAMP RUN LEADING TO THE LANDING. THE LANDING CLEAR LENGTH SHALL BE SIXTY (60)INCHES.
6. RAMP RUNS WITH A RISE GREATER THAN SIX (6) INCHES SHALL HAVE HANDRAILS ON BOTH SIDES COMPLYING WITH THE AMERICANS WITH DISABILITIES ACT (2010 ADA STANDARDS), THE NC BUILDING CODE/ANSI A117.1, AND APPLICABLE LOCAL LAWS & REGULATIONS.
7. FLOOR SURFACES OF RAMPS AND LANDINGS SHALL BE STABLE, FIRM AND SLIP RESISTANT.
8. EDGE PROTECTION COMPLYING WITH AMERICANS WITH DISABILITIES ACT (2010 ADA STANDARDS), THE NC BUILDING CODE/ANSI A117.1, AND APPLICABLE LOCAL LAWS & REGULATIONS SHALL BE PROVIDED ON EACH SIDE OF RAMP RUNS AND ON EACH SIDE OF RAMP LANDINGS.
9. WHERE DOORWAYS ARE LOCATED ADJACENT TO A RAMP LANDING, MANEUVERING CLEARANCES REQUIRED BY THE AMERICANS WITH DISABILITIES ACT (2010 ADA STANDARDS), THE NC BUILDING CODE/ANSI A117.1 SHALL BE PERMITTED TO OVERLAP THE REQUIRED LANDING AREA. WHERE DOORS THAT ARE SUBJECT TO LOCKING ARE ADJACENT TO A RAMP LANDING, LANDINGS SHALL BE SIZED TO PROVIDE A COMPLIANT TURNING SPACE.

GENERAL CURB RAMP NOTES:

1. THE MAXIMUM RUNNING SLOPE OF A CURB RAMP SHALL BE 8.33% AND THE MAXIMUM CROSS SLOPE SHALL BE 2.0%.
2. COUNTER SLOPES OF ADJOINING GUTTERS AND ROAD SURFACES IMMEDIATELY ADJACENT TO THE CURB RAMP SHALL NOT BE STEEPER THAN 5%. THE ADJACENT SURFACES AT TRANSITIONS AT CURB RAMPS TO WALKS, GUTTERS AND STREETS SHALL BE AT THE SAME LEVEL.
3. THE CLEAR WIDTH OF A CURB RAMP SHALL BE 36 INCHES (36) MINIMUM, EXCLUSIVE OF FLARED SIDES, IF PROVIDED. *NOTE NC BUILDING CODE REQUIRES EXTERIOR ACCESSIBLE ROUTES TO BE 48 INCHES MINIMUM WIDE (1104.1 & 1104.2).*
4. LANDINGS SHALL BE PROVIDED AT THE TOP OF CURB RAMPS. THE CLEAR LENGTH OF THE LANDING SHALL BE THIRTY-SIX (36) INCHES MINIMUM. THE CLEAR WIDTH OF THE LANDING SHALL BE AT LEAST AS WIDE AS THE CURB RAMP, EXCLUDING FLARED SIDES, LEADING TO THE LANDING. LANDINGS SHALL HAVE A SLOPE NOT STEEPER THAN 2% IN ANY DIRECTION.
5. IF A CURB RAMP IS LOCATED WHERE PEDESTRIANS MUST WALK ACROSS THE RAMP, OR WHERE IT IS NOT PROTECTED BY HANDRAILS OR GUARDRAILS, IT SHALL HAVE FLARED SIDES.
6. WHERE PROVIDED, CURB RAMP FLARES SHALL NOT EXCEED 10%.
7. CURB RAMPS AND THE FLARED SIDES OF CURB RAMPS SHALL BE LOCATED SO THAT THEY DO NOT PROJECT INTO VEHICULAR TRAFFIC LANES, PARKING SPACES OR PARKING ACCESS AISLES. CURBS AT MARKED CROSSINGS SHALL BE WHOLLY CONTAINED WITHIN THE MARKINGS, EXCLUDING ANY FLARED SIDES.
8. CURB RAMPS SHALL BE LOCATED OR PROTECTED TO PREVENT THEIR OBSTRUCTION BY PARKED VEHICLES.
9. IT IS RECOMMENDED TO PROVIDE CURB RAMPS WITH A TWENTY-FOUR (24) INCH DEEP DETECTABLE WARNING COMPLYING WITH 406.12 A117.1, EXTENDING THE FULL WIDTH OF THE RAMP. REFERTO DETECTABLE WARNING DETAILS AND NOTES FOR PLACEMENT, ORIENTATION AND NOTES. THE NC BUILDING CODE DOES NOT CURRENTLY REQUIRE DETECTABLE WARNINGS AT CURB RAMPS, NOR DO THE 2010 ADA STANDARDS – HOWEVER US DOT ADA REGULATIONS DO REQUIRE THESE.
10. FLOOR SURFACES OF CURB RAMPS SHALL BE DEEP GROOVED, ½ INCH WIDE BY ¼ INCH DEEP, ONE (1) INCH CENTERS TRANSVERSE TO THE RAMP.
11. WHERE PROVIDED, STOP LINES SHALL BE LOCATED IN ADVANCE OF CURB RAMP.
12. WHERE PROVIDED, PEDESTRIAN ACTIVATED SIGNALS SHALL BE LOCATED ADJACENT TO THE SIDEWALK AND NOT ON THE SIDEWALK.
13. WHERE PROVIDED, DRAINAGE INLETS SHALL BE LOCATED UPSTREAM OF CURB RAMPS AND NOT IN THE RAMP AREA.
14. CURB RAMP TYPE AND LOCATION ARE PER PLAN.

NORTH CAROLINA ACCESSIBILITY NOTES CONTINUED:

PARKING SPACE NOTES

1. ACCESSIBLE PARKING SPACES SHALL BE LOCATED ON THE SHORTEST ACCESSIBLE ROUTES OF TRAVEL FROM ADJACENT PARKING TO AN ACCESSIBLE BUILDING ENTRANCE.
2. ACCESSIBLE PARKING SPACES SHALL BE AT LEAST NINETY-SIX (96) INCHES WIDE. ACCESS AISLES SHALL BE 60 INCHES WIDE. ONE OF SIX ACCESSIBLE SPACES SHOULD PROVIDE A VAN ACCESSIBLE AISLE. THE AISLE SHOULD BE 96 INCHES WIDE (OR ACCESSIBLE SPACE IS 11 FEET AND ACCESS AISLE IS FIVE FEET). WHERE PARKING SPACES AND ACCESS AISLES ARE MARKED WITH LINES, THE WIDTH MEASUREMENTS SHALL BE MADE FROM CENTERLINE OF THE MARKINGS. WHERE PARKING SPACES OR ACCESS AISLES ARE NOT ADJACENT TO ANOTHER PARKING SPACE OR ACCESS AISLES, MEASUREMENTS SHALL BE PERMITTED TO INCLUDE THE FULL WIDTH OF THE LINE DEFINING THE PARKING SPACE OR ACCESS AISLE.
3. PARKING ACCESS AISLES SHALL BE PART OF AN ACCESSIBLE ROUTE TO THE BUILDING OR FACILITY ENTRANCE AND SHALL COMPLY WITH PROVISIONS FOR ACCESSIBLE ROUTES. MARKED CROSSINGS SHALL BE PROVIDED WHERE THE ACCESSIBLE ROUTE MUST CROSS VEHICULAR TRAFFIC LANES. WHERE POSSIBLE, IT IS PREFERABLE THAT THE ACCESSIBLE ROUTE NOT PASS BEHIND PARKED VEHICLES.
4. TWO (2) ACCESSIBLE PARKING SPACES MAY SHARE A COMMON ACCESS AISLE.
5. ACCESS AISLES SHALL EXTEND THE FULL LENGTH OF THE PARKING SPACE THEY SERVE.
6. ACCESS AISLES SHALL BE MARKED SO AS TO DISCOURAGE PARKING IN THEM.
7. ACCESS AISLES SHALL NOT OVERLAP THE VEHICULAR WAY. ACCESS AISLES SHALL BE PERMITTED TO BE PLACED ON EITHER SIDE OF THE PARKING SPACE EXCEPT FOR ANGLED VAN PARKING SPACES WHICH SHALL HAVE ACCESS AISLES LOCATED ON THE PASSENGER SIDE OF THE PARKING SPACES.
8. FLOOR SURFACES OF PARKING SPACES AND ACCESS AISLES SERVING THEM SHALL BE STABLE, FIRM AND SLIP RESISTANT. ACCESS AISLES SHALL BE AT THE SAME LEVEL AS THE PARKING SPACES THEY SERVE. CHANGES IN LEVEL ARE NOT PERMITTED.
9. PARKING SPACES AND ACCESS AISLES SHALL BE LEVEL WITH SURFACE SLOPES NOT EXCEEDING 2.0% IN ALL DIRECTIONS.
10. PARKED VEHICLE OVERHANGS SHALL NOT REDUCE THE REQUIRED CLEAR WIDTH OF AN ACCESSIBLE ROUTE.
11. PARKING SPACES FOR VANS AND ACCESS AISLES AND VEHICULAR ROUTES SERVING THEM SHALL PROVIDE A VERTICAL CLEARANCE OF NINETY-EIGHT (98) INCHES MINIMUM. SIGNS SHALL BE PROVIDED AT ENTRANCES TO PARKING FACILITIES INFORMING DRIVERS OF CLEARANCES AND THE LOCATION OF VAN ACCESSIBLE PARKING SPACES.
12. EACH ACCESSIBLE PARKING SPACE SHALL BE PROVIDED WITH SIGNAGE DISPLAYING THE INTERNATIONAL SYMBOL OF ACCESSIBILITY. SIGNS SHALL BE INSTALLED AT A MINIMUM CLEAR HEIGHT OF SIXTY (60) INCHES ABOVE GRADE AND SHALL NOT INTERFERE WITH AN ACCESSIBLE ROUTE FROM AN ACCESS AISLE. SIGNS LOCATED WHERE THEY MAY BE HIT BY VEHICLES BEING PARKED SHALL BE INSTALLED WITH BOLLARD PROTECTION.
13. SIGNAGE AT ACCESSIBLE PARKING SPACES REQUIRED BY THE NC BUILDING CODE SECTION 1106.1 SHALL COMPLY WITH THE REQUIREMENTS OF NORTH CAROLINA GENERAL STATUTE 20-37.6 AND 136-30 AND THE NCDOT UNIFORM MANUAL ON TRAFFIC CONTROL DEVICES. A SEPARATE SIGN IS REQUIRED FOR EACH SPACE. SIGNS TO INDICATE THE MAXIMUM PENALTY MUST BE PROVIDED AT EACH ACCESSIBLE SPACE.
14. ACCESSIBLE PARKING SPACE, ACCESS AISLE STRIPING, AND INTERNATIONAL SYMBOL OF ACCESSIBILITY SHALL BE PAINTED BLUE (OR ANOTHER COLOR THAT CAN BE DISTINGUISHED FROM PAVEMENT).

PASSENGER LOADING ZONE NOTES:

1. PASSENGER LOADING ZONES SHALL PROVIDE VEHICULAR PULL-UP SPACE NINETY-SIX (96) INCHES WIDE MINIMUM AND TWENTY (20) FEET LONG MINIMUM.
2. PASSENGER LOADING ZONES SHALL PROVIDE A CLEARLY MARKED ACCESS AISLE THAT IS SIXTY (60) INCHES WIDE MINIMUM AND EXTENDS THE FULL LENGTH OF THE VEHICLE PULL-UP SPACE THEY SERVE.
3. ACCESS AISLE SHALL ADJOIN AN ACCESSIBLE ROUTE AND NOT OVERLAP THE VEHICULAR WAY.
4. VEHICLE PULL-UP SPACES AND ACCESS AISLES SERVING THEM SHALL BE LEVEL WITH SURFACE SLOPES NOT EXCEEDING 2.0% IN ALL DIRECTIONS. ACCESS AISLES SHALL BE AT THE SAME LEVEL AS THE VEHICLE PULL-UP SPACE THEY SERVE. CHANGES IN LEVEL ARE NOT PERMITTED.
5. FLOOR SURFACES OF VEHICLE PULL-UP SPACES AND ACCESS AISLES SERVING THEM SHALL BE STABLE, FIRM AND SLIP RESISTANT.
6. VEHICLE PULL-UP SPACES, ACCESS AISLES SERVING THEM AND A VEHICULAR ROUTE FROM AN ENTRANCE TO THE PASSENGER LOADING ZONE, AND FROM THE PASSENGER LOADING ZONE TO A VEHICULAR EXIT SERVING THEM, SHALL PROVIDE A VERTICAL CLEARANCE OF ONE HUNDRED FOURTEEN (114)INCHES MINIMUM.

ACCESSIBLE ENTRANCE NOTES:

1. ACCESSIBLE ENTRANCES SHALL BE PROVIDED AS REQUIRED BY THE AMERICANS WITH DISABILITIES ACT (2010 ADA STANDARDS) AND THE NORTH CAROLINA BUILDING CODE, AND APPLICABLE LOCAL LAWS & REGULATIONS.
2. ENTRANCE DOORS, DOORWAYS AND GATES SHALL COMPLY WITH THE AMERICANS WITH DISABILITIES ACT (2010 ADA STANDARDS) THE NC BUILDING CODE/ANSI A117.1 AND SHALL BE ON AN ACCESSIBLE ROUTE.

GENERAL STORM SEWER NOTES:

1. ALL STORMDRAINS SHALL BE CONSTRUCTED IN ACCORDANCE WITH TOWN OF LELAND AND STATE OF NORTH CAROLINA REQUIREMENTS AS SPECIFIED ON THE DRAWINGS AND PROJECT SPECIFICATIONS.
2. BEDDING FOR ALL STORMDRAIN PIPE SHALL BE AS SPECIFIED ON THE DRAWINGS.
3. ALL STORMDRAIN PIPES SHOWN AS RCP ON THE PLANS SHALL BE REINFORCED CONCRETE PIPE CONFORMING TO ASTM C-76, UNLESS INDICATED OTHERWISE ON PLANS.

ROOF DRAIN NOTES:

1. PROPOSED BUILDINGS SHALL DIVERT ROOF DRAINAGE TO STORMWATER COLLECTION SYSTEMS.

EXISTING UTILITY NOTES:

1. IT IS THE RESPONSIBILITY OF THE GENERAL CONTRACTOR TO VERIFY THE ACTUAL LOCATION AND AVAILABILITY OF ALL EXISTING AND PROPOSED UTILITIES IN THE FIELD PRIOR TO GROUND BREAKING.
2. EXISTING UTILITIES AND STRUCTURES SHOWN, BOTH UNDERGROUND AND ABOVE GROUND, ARE BASED ON A FIELD SURVEY AND THE BEST AVAILABLE RECORD DRAWINGS. THE CONTRACTOR SHALL FIELD VERIFY FIELD CONDITIONS PRIOR TO BEGINNING RELATED CONSTRUCTION. ANY DISCREPANCIES SHALL BE REPORTED TO THE OWNER'S REPRESENTATIVE IMMEDIATELY.

TC^2
ENGINEERING, PLLC
201 N. Front Street
Suite M-108
Wilmington, NC 28401
910-547-5856

NO.	REVISION	DATE

SAMET HARNETT COUNTY 1

GENERAL NOTES

ORIGINAL MAP SIZE
24" X 36"
DRAWN: BPE
CHECKED: WPC
PROJECT NO.:

SHEET:
C1.1

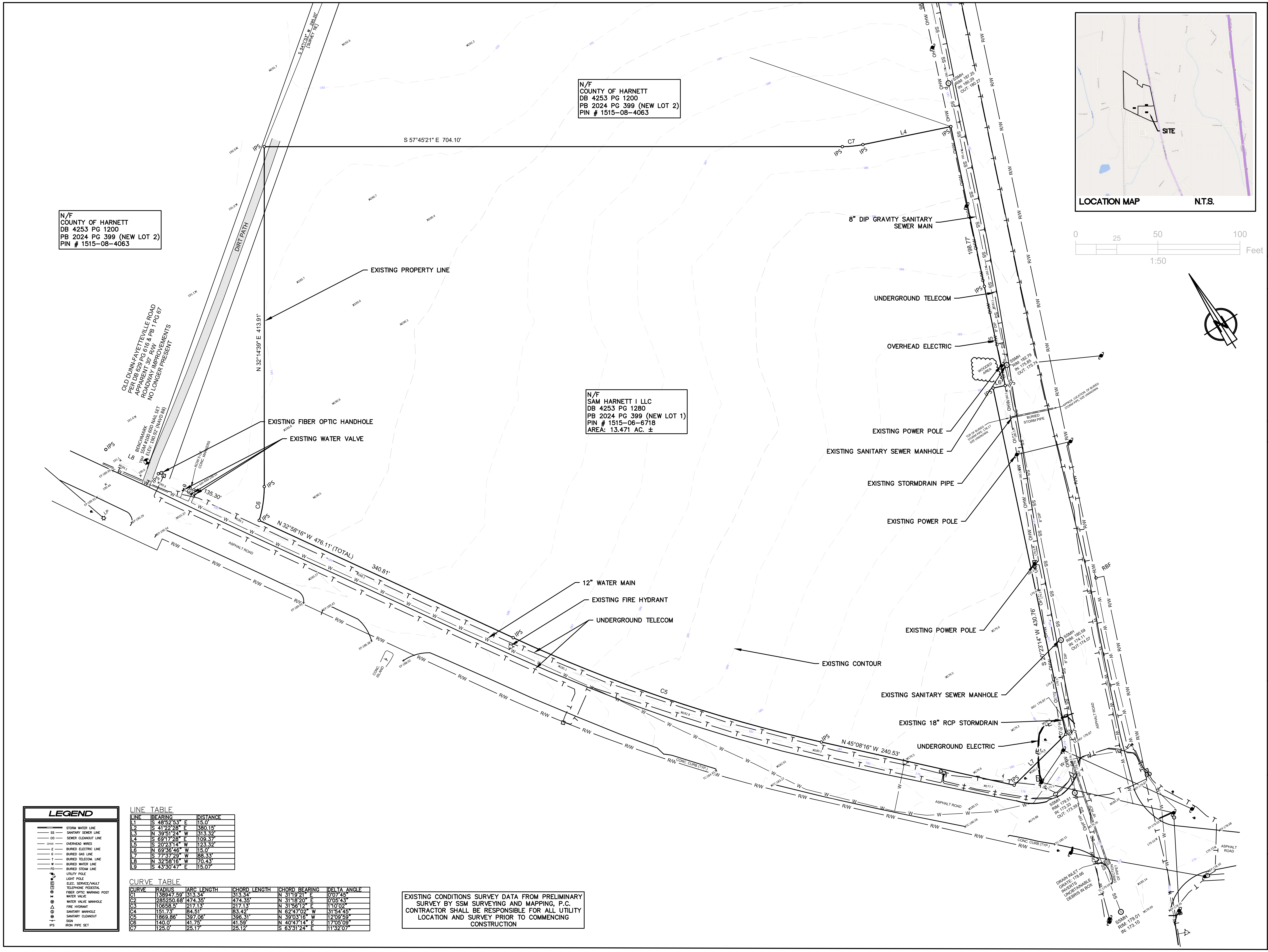
N/F
COUNTY OF HARNETT
DB 4253 PG 1200
PB 2024 PG 399 (NEW LOT 2)
PIN # 1515-08-4063
N/F
SAM HARNETT I LLC
DB 4253 PG 1280
PB 2024 PG 399 (NEW LOT 1)
PIN # 1515-06-6718
AREA: 13.471 AC. ±
S 57°45'21" E 704.10'
N 32°14'39" E 413.91'
N 32°58'16" W 476.11' (TOTAL)
340.81'
135.30'
N 45°08'16" W 240.53'
S 32°23'14" W 430.76'
198.77'
OLD DUNN-FAYETTEVILLE ROAD
PER DB 629 PG 616 & PB 1 PG 67
APPARENT 30' R/W
ROADWAY IMPROVEMENTS
NO LONGER PRESENT
DIRT PATH
BENCHMARK
SSM #100 60D NAIL SET
ELEV: 190.92' (NAVD 88)
EXISTING PROPERTY LINE
EXISTING FIBER OPTIC HANDHOLE
EXISTING WATER VALVE
12" WATER MAIN
EXISTING FIRE HYDRANT
UNDERGROUND TELECOM
EXISTING CONTOUR
8" DIP GRAVITY SANITARY SEWER MAIN
UNDERGROUND TELECOM
OVERHEAD ELECTRIC
EXISTING POWER POLE
EXISTING SANITARY SEWER MANHOLE
EXISTING STORMDRAIN PIPE
EXISTING POWER POLE
EXISTING POWER POLE
EXISTING SANITARY SEWER MANHOLE
EXISTING 18" RCP STORMDRAIN
UNDERGROUND ELECTRIC
ASPHALT ROAD
CONC. CURB (TYP.)
CONC. ISLAND
WOODED AREA
BURIED STORM PIPE
DRAIN INLET
SSMH
RBF
IPS
R/W
C5
C6
C7
L4
L7
LOCATION MAP
N.T.S.
SITE
0
25
50
100
Feet
1:50

EXISTING CONDITIONS SURVEY DATA FROM PRELIMINARY SURVEY BY SSM SURVEYING AND MAPPING, P.C. CONTRACTOR SHALL BE RESPONSIBLE FOR ALL UTILITY LOCATION AND SURVEY PRIOR TO COMMENCING CONSTRUCTION

LEGEND

═══	STORM WATER LINE
—— SS ——	SANITARY SEWER LINE
—— CO ——	SEWER CLEANOUT LINE
—— OHW ——	OVERHEAD WIRES
—— E ——	BURIED ELECTRIC LINE
—— G ——	BURIED GAS LINE
—— T ——	BURIED TELECOM. LINE
—— W ——	BURIED WATER LINE
—— FO ——	BURIED STEAM LINE
	UTILITY POLE
LP	LIGHT POLE
E	ELEC. SERVICE/VAULT
T	TELEPHONE PEDESTAL
FO	FIBER OPTIC WARNING POST
⧓	WATER VALVE
Ⓦ	WATER VALVE MANHOLE
	FIRE HYDRANT
Ⓢ	SANITARY MANHOLE
CO	SANITARY CLEANOUT
	SIGN
IPS	IRON PIPE SET

LINE TABLE

LINE	BEARING	DISTANCE
L1	S 48°52'53" E	15.0'
L2	S 41°22'28" E	380.15'
L3	N 39°51'24" W	313.32'
L4	S 69°17'28" E	109.37'
L5	S 20°23'14" W	123.32'
L6	N 69°36'46" W	15.0'
L7	S 77°37'29" W	88.33'
L8	N 32°58'16" W	70.43'
L9	S 43°30'47" E	15.07'

CURVE TABLE

CURVE	RADIUS	ARC LENGTH	CHORD LENGTH	CHORD BEARING	DELTA ANGLE
C1	138947.59'	313.34'	313.34'	N 31°19'21" E	0°07'45"
C2	285250.68'	474.35'	474.35'	N 31°18'20" E	0°05'43"
C3	10658.5'	217.13'	217.13'	N 31°56'12" E	1°10'02"
C4	151.73'	84.51'	83.42'	N 62°47'02" W	31°54'45"
C5	1869.86'	397.06'	396.31'	N 39°03'16" W	12°09'59"
C6	140.0'	41.75'	41.59'	N 40°47'14" E	17°05'09"
C7	125.0'	25.17'	25.12'	S 63°31'24" E	11°32'07"

TC²
ENGINEERING, PLLC
201 N. Front Street
Suite M-108
Wilmington, NC 28401
910-547-5856

NO.	REVISION	DATE

SAMET HARNET COUNTY 1

EXISTING CONDITIONS

ORIGINAL MAP SIZE
24" X 36"
DRAWN: BPE
CHECKED: WPC
PROJECT NO.:

SHEET:
C1.2

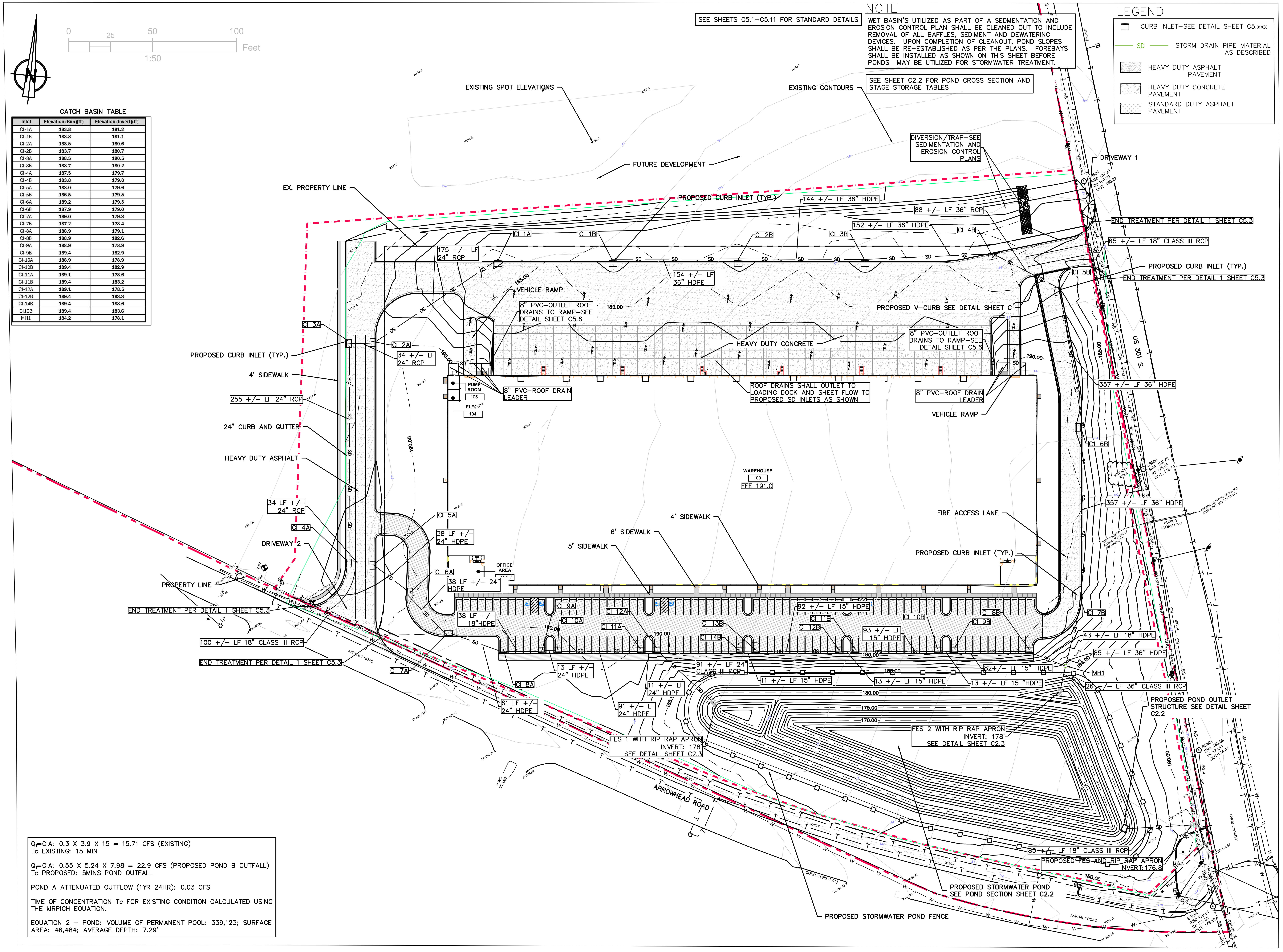
0
25
50
100
Feet
1:50
N
EXISTING SPOT ELEVATIONS
EXISTING CONTOURS
FUTURE DEVELOPMENT
EX. PROPERTY LINE
PROPOSED CURB INLET (TYP.)
144 +/- LF 36" HDPE
88 +/- LF 36" RCP
152 +/- LF 36" HDPE
DIVERSION/TRAP-SEE SEDIMENTATION AND EROSION CONTROL PLANS
DRIVEWAY 1
END TREATMENT PER DETAIL 1 SHEET C5.3
65 +/- LF 18" CLASS III RCP
PROPOSED CURB INLET (TYP.)
END TREATMENT PER DETAIL 1 SHEET C5.3
CI 1A
CI 1B
CI 2B
CI 3B
CI 4B
CI 5B
175 +/- LF 24" RCP
154 +/- LF 36" HDPE
VEHICLE RAMP
8" PVC-OUTLET ROOF DRAINS TO RAMP-SEE DETAIL SHEET C5.6
PROPOSED V-CURB SEE DETAIL SHEET C
HEAVY DUTY CONCRETE
8" PVC-OUTLET ROOF DRAINS TO RAMP-SEE DETAIL SHEET C5.6
US 301 S.
357 +/- LF 36" HDPE
CI 3A
CI 2A
34 +/- LF 24" RCP
PROPOSED CURB INLET (TYP.)
4' SIDEWALK
255 +/- LF 24" RCP
24" CURB AND GUTTER
HEAVY DUTY ASPHALT
PUMP ROOM 105
ELEC. 104
8" PVC-ROOF DRAIN LEADER
ROOF DRAINS SHALL OUTLET TO LOADING DOCK AND SHEET FLOW TO PROPOSED SD INLETS AS SHOWN
8" PVC-ROOF DRAIN LEADER
VEHICLE RAMP
CI 6B
WAREHOUSE 100
FFE 191.0
357 +/- LF 36" HDPE
34 LF +/- 24" RCP
CI 4A
CI 5A
38 LF +/- 24" HDPE
4' SIDEWALK
6' SIDEWALK
5' SIDEWALK
FIRE ACCESS LANE
PROPOSED CURB INLET (TYP.)
DRIVEWAY 2
CI 6A
OFFICE AREA
38 LF +/- 24" HDPE
PROPERTY LINE
END TREATMENT PER DETAIL 1 SHEET C5.3
100 +/- LF 18" CLASS III RCP
END TREATMENT PER DETAIL 1 SHEET C5.3
CI 7A
38 LF +/- 18"HDPE
CI 9A
CI 10A
CI 12A
CI 11A
CI 13B
CI 14B
CI 11B
CI 12B
92 +/- LF 15" HDPE
CI 10B
93 +/- LF 15" HDPE
CI 8B
CI 9B
CI 7B
43 +/- LF 18" HDPE
85 +/- LF 36" HDPE
MH1
26 +/- LF 36" CLASS III RCP
CI 8A
13 LF +/- 24" HDPE
91 +/- LF 24" CLASS III RCP
11 +/- LF 15" HDPE
13 +/- LF 15" HDPE
13 +/- LF 15 "HDPE
82+/- LF 15" HDPE
11 +/- LF 24" HDPE
91 +/- LF 24" HDPE
61 LF +/- 24" HDPE
PROPOSED POND OUTLET STRUCTURE SEE DETAIL SHEET C2.2
FES 1 WITH RIP RAP APRON INVERT: 178 SEE DETAIL SHEET C2.3
FES 2 WITH RIP RAP APRON INVERT: 178 SEE DETAIL SHEET C2.3
ARROWHEAD ROAD
ASPHALT ROAD
85 +/- LF 18" CLASS III RCP
PROPOSED FES AND RIP RAP APRON INVERT:176.8
PROPOSED STORMWATER POND SEE POND SECTION SHEET C2.2
PROPOSED STORMWATER POND FENCE
CONC. CURB (TYP.)
SSMH RIM: 187.25 IN: 180.29 OUT: 180.27
185.00
190.00
180.00
175.00
170.00
SD
SS

SEE SHEETS C5.1–C5.11 FOR STANDARD DETAILS

NOTE

WET BASIN'S UTILIZED AS PART OF A SEDMENTATION AND EROSION CONTROL PLAN SHALL BE CLEANED OUT TO INCLUDE REMOVAL OF ALL BAFFLES, SEDIMENT AND DEWATERING DEVICES. UPON COMPLETION OF CLEANOUT, POND SLOPES SHALL BE RE–ESTABLISHED AS PER THE PLANS. FOREBAYS SHALL BE INSTALLED AS SHOWN ON THIS SHEET BEFORE PONDS MAY BE UTILIZED FOR STORMWATER TREATMENT.

SEE SHEET C2.2 FOR POND CROSS SECTION AND STAGE STORAGE TABLES

LEGEND

▭	CURB INLET–SEE DETAIL SHEET C5.xxx
—— SD ——	STORM DRAIN PIPE MATERIAL AS DESCRIBED
▨	HEAVY DUTY ASPHALT PAVEMENT
▨	HEAVY DUTY CONCRETE PAVEMENT
▨	STANDARD DUTY ASPHALT PAVEMENT

CATCH BASIN TABLE

Inlet	Elevation (Rim)(ft)	Elevation (Invert)(ft)
CI-1A	183.8	181.2
CI-1B	183.8	181.1
CI-2A	188.5	180.6
CI-2B	183.7	180.7
CI-3A	188.5	180.5
CI-3B	183.7	180.2
CI-4A	187.5	179.7
CI-4B	183.8	179.8
CI-5A	188.0	179.6
CI-5B	186.5	179.5
CI-6A	189.2	179.5
CI-6B	187.9	179.0
CI-7A	189.0	179.3
CI-7B	187.2	178.4
CI-8A	188.9	179.1
CI-8B	188.9	182.6
CI-9A	188.9	178.9
CI-9B	189.4	182.9
CI-10A	188.9	178.9
CI-10B	189.4	182.9
CI-11A	189.1	178.6
CI-11B	189.4	183.2
CI-12A	189.1	178.5
CI-12B	189.4	183.3
CI-14B	189.4	183.6
CI13B	189.4	183.6
MH1	184.2	178.1

Q_1=CIA: 0.3 X 3.9 X 15 = 15.71 CFS (EXISTING)
Tc EXISTING: 15 MIN

Q_1=CIA: 0.55 X 5.24 X 7.98 = 22.9 CFS (PROPOSED POND B OUTFALL)
Tc PROPOSED: 5MINS POND OUTFALL

POND A ATTENUATED OUTFLOW (1YR 24HR): 0.03 CFS

TIME OF CONCENTRATION Tc FOR EXISTING CONDITION CALCULATED USING THE kIRPICH EQUATION.

EQUATION 2 – POND: VOLUME OF PERMANENT POOL: 339,123; SURFACE AREA: 46,484; AVERAGE DEPTH: 7.29'

TC²
ENGINEERING, PLLC
201 N. Front Street
Suite M-108
Wilmington, NC 28401
910-547-5856

NO.	REVISION	DATE

SAMET HARNETT COUNTY 1

PRELIMINARY OVERALL STORMDRAIN

ORIGINAL MAP SIZE
24" X 36"
DRAWN: BPE
CHECKED: WPC
PROJECT NO.:

SHEET:
C2.0

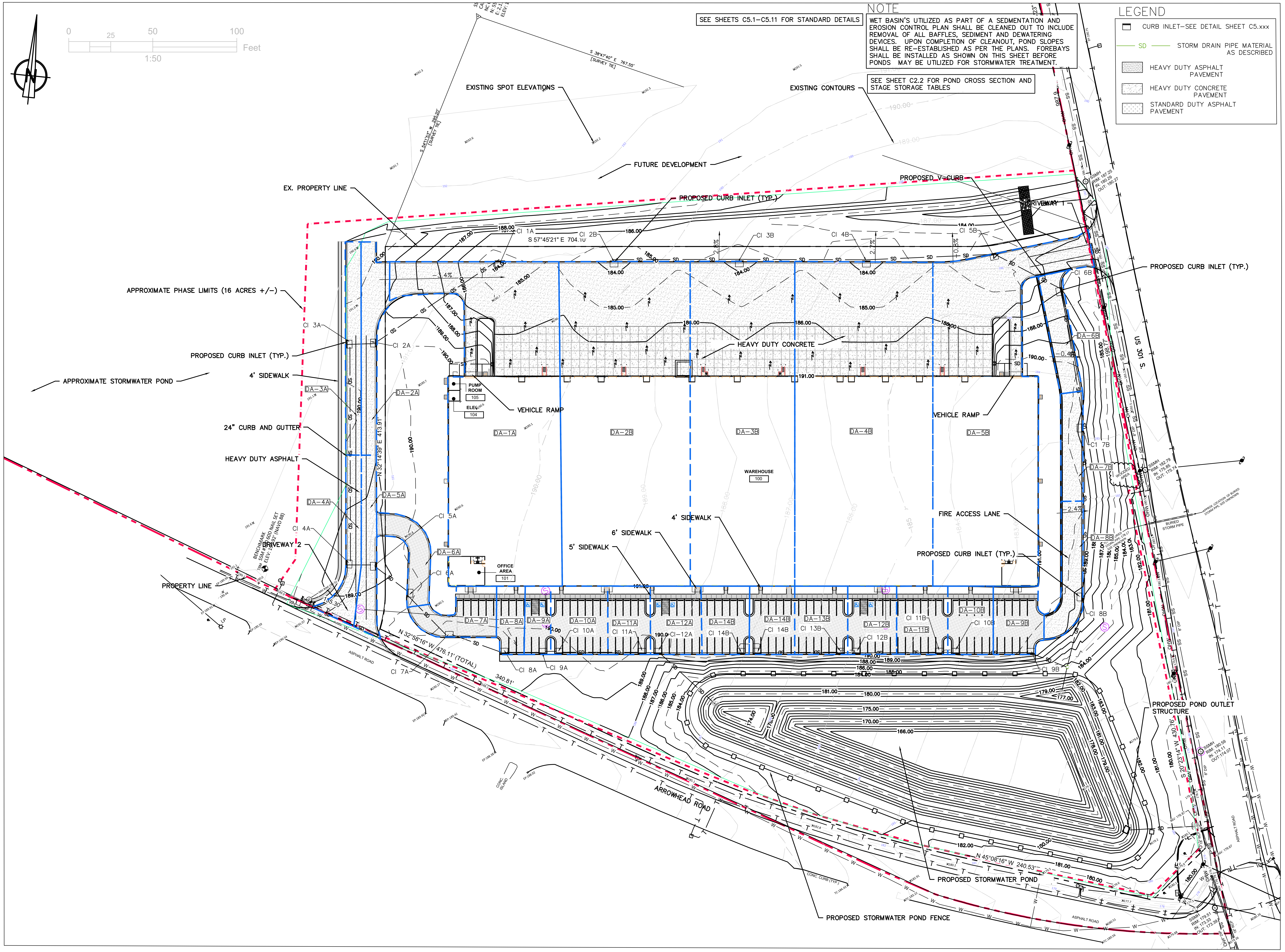
0 25 50 100
Feet
1:50
EXISTING SPOT ELEVATIONS
EXISTING CONTOURS
FUTURE DEVELOPMENT
EX. PROPERTY LINE
PROPOSED CURB INLET (TYP.)
PROPOSED V-CURB
DRIVEWAY 1
APPROXIMATE PHASE LIMITS (16 ACRES +/-)
PROPOSED CURB INLET (TYP.)
APPROXIMATE STORMWATER POND
4' SIDEWALK
24" CURB AND GUTTER
HEAVY DUTY ASPHALT
HEAVY DUTY CONCRETE
VEHICLE RAMP
PUMP ROOM 105
ELEC 104
WAREHOUSE 100
OFFICE AREA 101
FIRE ACCESS LANE
4' SIDEWALK
6' SIDEWALK
5' SIDEWALK
DRIVEWAY 2
PROPERTY LINE
BENCHMARK
US 301 S.
ARROWHEAD ROAD
PROPOSED POND OUTLET STRUCTURE
PROPOSED STORMWATER POND
PROPOSED STORMWATER POND FENCE
S 57°45'21" E 704.10
N 32°14'39" E 413.91'
N 32°58'16" W 476.11' (TOTAL)
340.81'
N 45°06'16" W 240.53'
S 20°23'14" W 430.76'
CI 1A
CI 2A
CI 2B
CI 3A
CI 3B
CI 4A
CI 4B
CI 5A
CI 5B
CI 6A
CI 6B
CI 7A
CI 7B
CI 8A
CI 8B
CI 9A
CI 9B
CI 10A
CI 10B
CI 11A
CI 11B
CI 12A
CI 12B
CI 13B
CI 14B
DA-1A
DA-2A
DA-2B
DA-3A
DA-3B
DA-4A
DA-4B
DA-5A
DA-5B
DA-6A
DA-6B
DA-7A
DA-7B
DA-8A
DA-8B
DA-9A
DA-9B
DA-10A
DA-10B
DA-11A
DA-11B
DA-12A
DA-12B
DA-13B
DA-14B
166.00
170.00
175.00
177.00
179.00
180.00
181.00
182.00
184.00
185.00
186.00
188.00
189.00
190.00
191.00

SEE SHEETS C5.1–C5.11 FOR STANDARD DETAILS

NOTE

WET BASIN'S UTILIZED AS PART OF A SEDMENTATION AND EROSION CONTROL PLAN SHALL BE CLEANED OUT TO INCLUDE REMOVAL OF ALL BAFFLES, SEDIMENT AND DEWATERING DEVICES. UPON COMPLETION OF CLEANOUT, POND SLOPES SHALL BE RE–ESTABLISHED AS PER THE PLANS. FOREBAYS SHALL BE INSTALLED AS SHOWN ON THIS SHEET BEFORE PONDS MAY BE UTILIZED FOR STORMWATER TREATMENT.

SEE SHEET C2.2 FOR POND CROSS SECTION AND STAGE STORAGE TABLES

LEGEND

▭	CURB INLET–SEE DETAIL SHEET C5.xxx
— SD —	STORM DRAIN PIPE MATERIAL AS DESCRIBED
▨	HEAVY DUTY ASPHALT PAVEMENT
▨	HEAVY DUTY CONCRETE PAVEMENT
▨	STANDARD DUTY ASPHALT PAVEMENT

TC²
ENGINEERING, PLLC
201 N. Front Street
Suite M-108
Wilmington, NC 28401
910-547-5856

NO.	REVISION	DATE

SAMET HARNETT COUNTY 1

PRELIMINARY OVERALL STORMDRAIN

ORIGINAL MAP SIZE
24" X 36"
DRAWN: BPE
CHECKED: WPC
PROJECT NO.:

SHEET:
C2.1

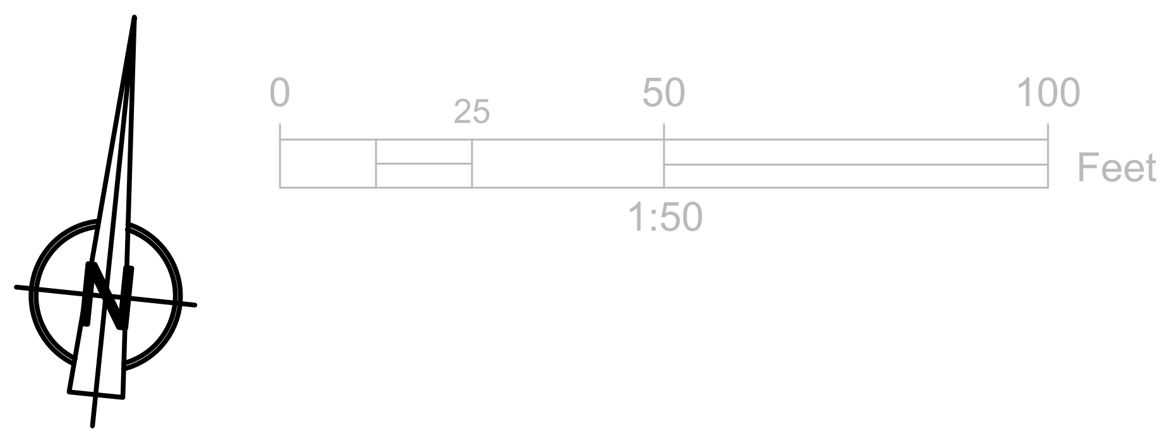

N
0
25
50
100
Feet
1:50

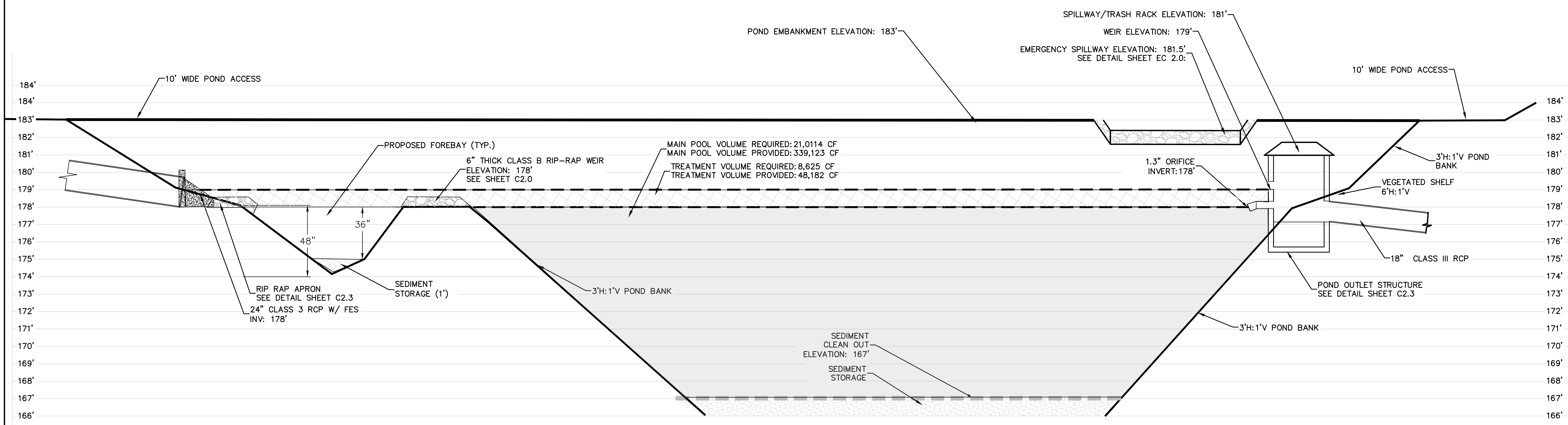

184'
184'
183'
182'
181'
180'
179'
178'
177'
176'
175'
174'
173'
172'
171'
170'
169'
168'
167'
166'
10' WIDE POND ACCESS
POND EMBANKMENT ELEVATION: 183'
SPILLWAY/TRASH RACK ELEVATION: 181'
WEIR ELEVATION: 179'
EMERGENCY SPILLWAY ELEVATION: 181.5'
SEE DETAIL SHEET EC 2.0:
10' WIDE POND ACCESS
PROPOSED FOREBAY (TYP.)
6" THICK CLASS B RIP-RAP WEIR
ELEVATION: 178'
SEE SHEET C2.0
MAIN POOL VOLUME REQUIRED: 21,0114 CF
MAIN POOL VOLUME PROVIDED: 339,123 CF
TREATMENT VOLUME REQUIRED: 8,625 CF
TREATMENT VOLUME PROVIDED: 48,182 CF
1.3" ORIFICE
INVERT: 178'
3'H:1'V POND BANK
VEGETATED SHELF
6'H:1'V
36"
48"
18" CLASS III RCP
SEDIMENT
STORAGE (1')
RIP RAP APRON
SEE DETAIL SHEET C2.3
24" CLASS 3 RCP W/ FES
INV: 178'
3'H:1'V POND BANK
POND OUTLET STRUCTURE
SEE DETAIL SHEET C2.3
3'H:1'V POND BANK
SEDIMENT
CLEAN OUT
ELEVATION: 167'
SEDIMENT
STORAGE

POND PROFILE (NOT TO SCALE)

STAGE STORAGE TABLE

ELEV	AREA (sq. ft.)	DEPT H (ft)	AVG END INC. VOL. (cu. ft.)	AVG END TOTAL VOL. (cu. ft.)	CONIC INC. VOL. (cu. ft.)	CONIC TOTAL VOL. (cu. ft.)
166.00	12,910.49	N/A	N/A	0.00	N/A	0.00
167.00	14,977.94	1.00	13944.21	13944.21	13931.42	13931.42
168.00	17,189.00	1.00	16083.47	30027.69	16070.79	30002.22
169.00	19,543.67	1.00	18366.34	48394.03	18353.75	48355.96
170.00	22,041.95	1.00	20792.81	69186.84	20780.30	69136.26
171.00	24,683.84	1.00	23362.90	92549.74	23350.44	92486.70
172.00	27,469.34	1.00	26076.59	118626.33	26064.19	118550.89
173.00	30,398.45	1.00	28933.89	147560.22	28921.53	147472.42
174.00	33,470.93	1.00	31934.69	179494.91	31922.36	179394.78
175.00	36,639.54	1.00	35055.24	214550.15	35043.30	214438.08
176.00	39,864.71	1.00	38252.13	252802.28	38240.79	252678.87
177.00	43,146.44	1.00	41505.58	294307.85	41494.76	294173.63
178.00	46,484.74	1.00	44815.59	339123.44	44805.22	338978.85
179.00	49,879.59	1.00	48182.16	387305.60	48172.19	387151.05
180.00	53,331.00	1.00	51605.29	438910.90	51595.67	438746.72
181.00	60,403.51	1.00	56867.26	495778.15	56830.57	495577.29
182.00	64,024.61	1.00	62214.06	557992.21	62205.27	557782.57
183.00	67,702.26	1.00	65863.43	623855.65	65854.88	623637.44

PERMANENT POOL ELEVATION

TEMPORARY POOL ELEVATION

TC^2
ENGINEERING, PLLC
201 N. Front Street
Suite M-108
Wilmington, NC 28401
910-547-5856

NO.	REVISION	DATE

SAMET HARNETT COUNTY 1

POND PROFILE

ORIGINAL MAP SIZE
24" X 36"
DRAWN: BPE
CHECKED: WPC
PROJECT NO.:

SHEET:

C2.2

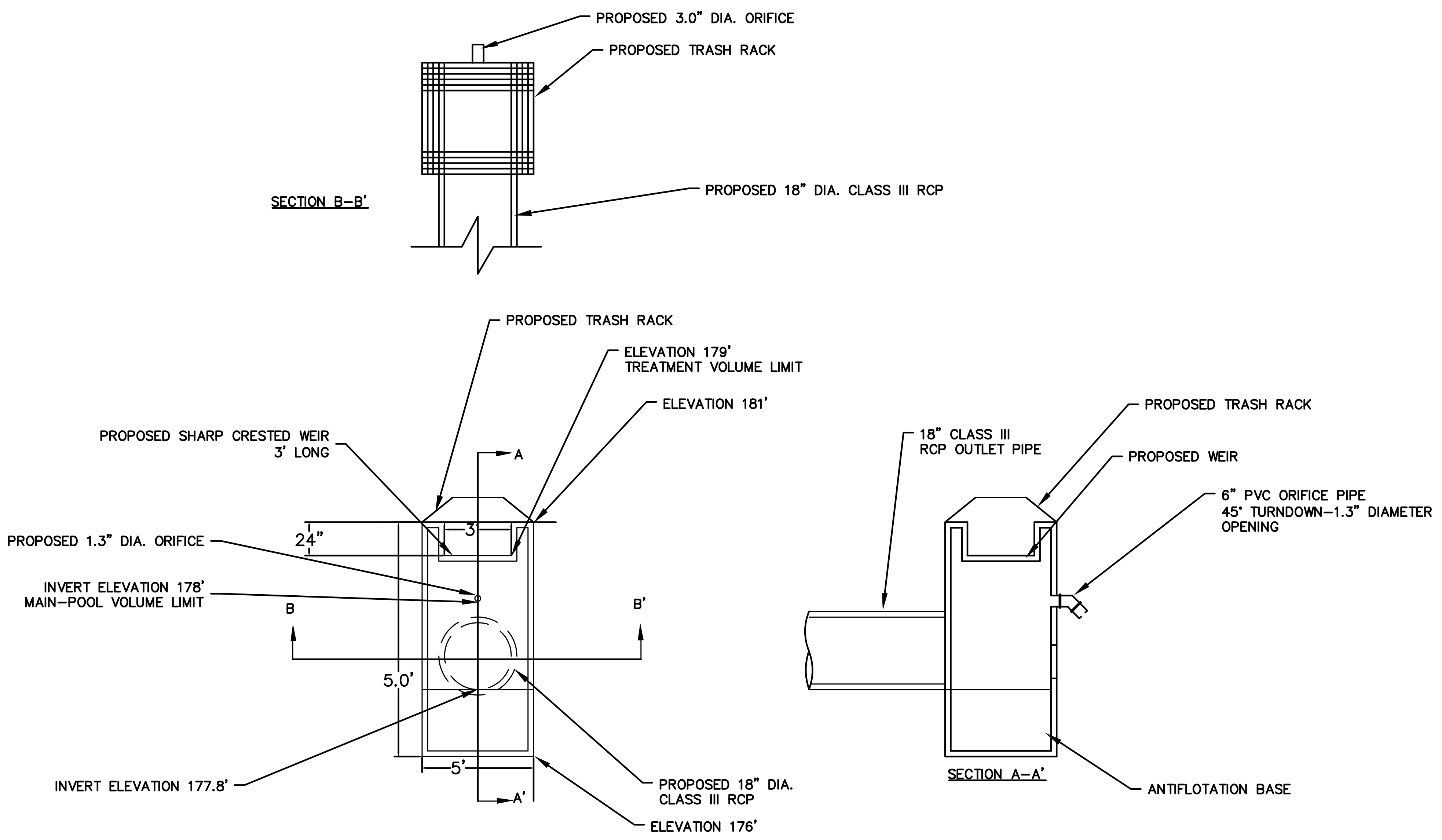
PROPOSED 3.0" DIA. ORIFICE
PROPOSED TRASH RACK
SECTION B-B'
PROPOSED 18" DIA. CLASS III RCP
PROPOSED TRASH RACK
ELEVATION 179'
TREATMENT VOLUME LIMIT
ELEVATION 181'
PROPOSED SHARP CRESTED WEIR
3' LONG
A
24"
3'
PROPOSED 1.3" DIA. ORIFICE
INVERT ELEVATION 178'
MAIN-POOL VOLUME LIMIT
B
B'
5.0'
INVERT ELEVATION 177.8'
5'
A'
PROPOSED 18" DIA.
CLASS III RCP
ELEVATION 176'
18" CLASS III
RCP OUTLET PIPE
PROPOSED TRASH RACK
PROPOSED WEIR
6" PVC ORIFICE PIPE
45° TURNDOWN-1.3" DIAMETER
OPENING
SECTION A-A'
ANTIFLOTATION BASE

POND OUTLET STRUCTURE A
SCALE NTS

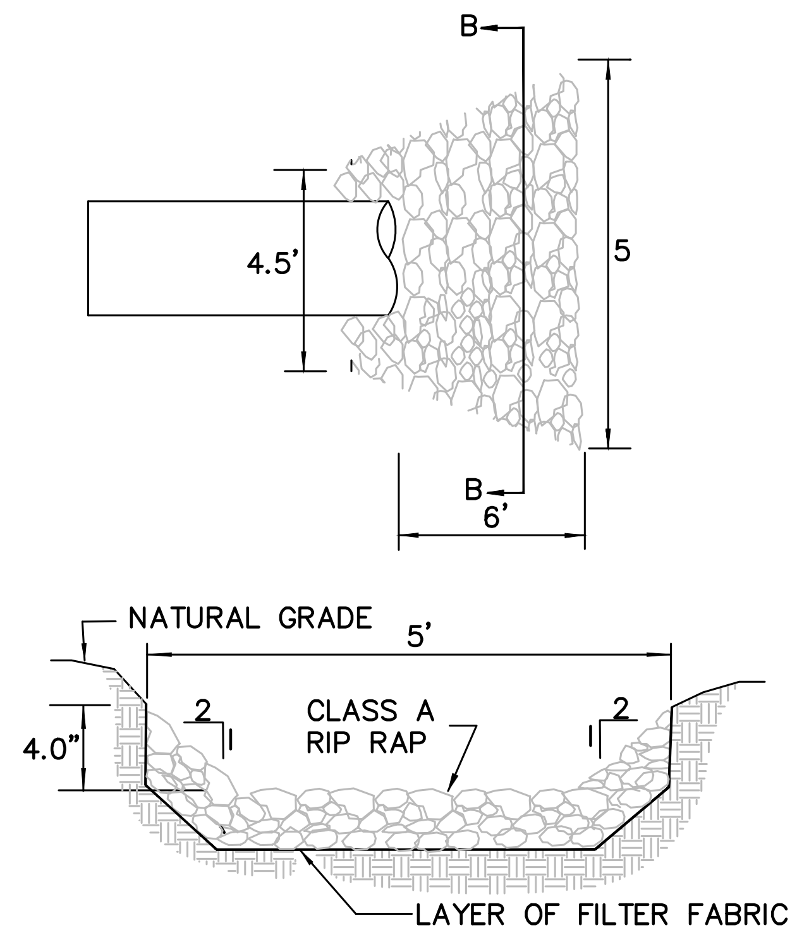
B
4.5'
5
B
6'
NATURAL GRADE
5'
4.0"
2
1
CLASS A
RIP RAP
1
2
LAYER OF FILTER FABRIC

NOTE: MINIMUM H=2/3
PIPE DIAMETER

SECTION B-B

RIP RAP OUTLET PROTECTION

NOTES:

1. 5' W X 6' L, 9" THICK CLASS B RIP RAP.
2. RIPRAP SHOULD EXTEND UP BOTH SIDES OF THE APRON AND AROUND THE END OF THE PIPE OR CULVERT AT THE DISCHARGE OUTLET AT A MAXIMUM SLOPE OF 2:1 AND A HEIGHT NOT LESS THAN TWO THIRDS THE PIPE DIAMETER OR CULVERT HEIGHT.
3. THERE SHALL BE NO OVERFLOW FROM THE END OF THE APRON TO THE SURFACE OF THE RECEIVING CHANNEL. THE AREA TO BE PAVED OR RIPRAPPED SHALL BE UNDERCUT SO THAT THE INVERT OF THE APRON SHALL BE AT THE SAME GRADE (FLUSH) WITH THE SURFACE OF THE RECEIVING CHANNEL. THE APRON SHALL HAVE A CUTOFF OR TOE WALL AT THE DOWNSTREAM END.
4. THE WIDTH OF THE END OF THE APRON SHALL BE EQUAL TO THE BOTTOM WIDTH OF THE RECEIVING CHANNEL. MAXIMUM TAPER TO RECEIVING CHANNEL 5:1
5. ALL SUBGRADE FOR STRUCTURE TO BE COMPACTED TO 95% OR GREATER.
6. THE PLACING OF FILL, EITHER LOOSE OR COMPACTED IN THE RECEIVING CHANNEL SHALL NOT BE ALLOWED.
7. NO BENDS OR CURVES IN THE HORIZONTAL ALIGNMENT OF THE APRON WILL BE PERMITTED.
8. RIP RAP APRON SHALL BE EXTENDED AS POND EXCAVATION CONTINUES AND DEPTH INCREASES.

RIPRAP PIPE OUTLET PROTECTION
NOT TO SCALE

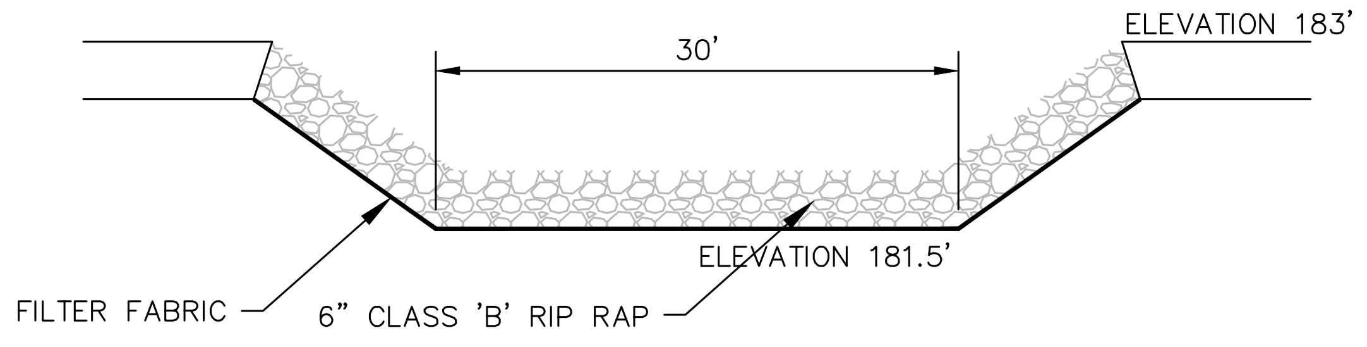
30'
ELEVATION 183'
ELEVATION 181.5'
FILTER FABRIC
6" CLASS 'B' RIP RAP

EMERGENCY SPILLWAY
NOT TO SCALE

TC^2
ENGINEERING, PLLC
201 N. Front Street
Suite M-108
Wilmington, NC 28401
910-547-5856

NO.	REVISION	DATE

SAMET HARNETT COUNTY 1

DRAINAGE DETAILS

ORIGINAL MAP SIZE
24" X 36"
DRAWN: BPE
CHECKED: WPC
PROJECT NO.:

SHEET:

C2.3

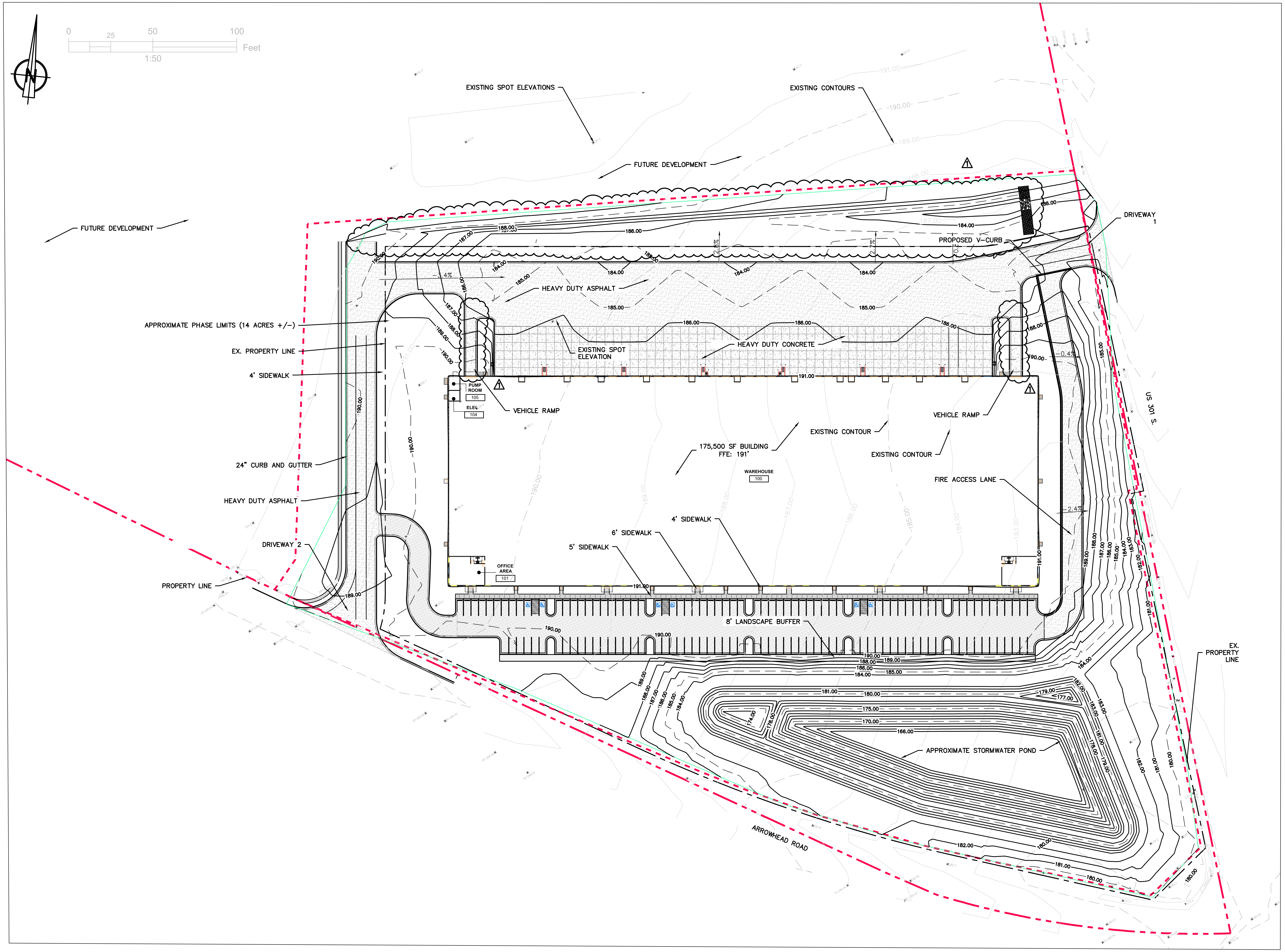
0
25
50
100
Feet
1:50
N
EXISTING SPOT ELEVATIONS
EXISTING CONTOURS
FUTURE DEVELOPMENT
FUTURE DEVELOPMENT
DRIVEWAY 1
PROPOSED V-CURB
HEAVY DUTY ASPHALT
APPROXIMATE PHASE LIMITS (14 ACRES +/-)
EX. PROPERTY LINE
4' SIDEWALK
EXISTING SPOT ELEVATION
HEAVY DUTY CONCRETE
PUMP ROOM
105
ELEC
104
VEHICLE RAMP
VEHICLE RAMP
EXISTING CONTOUR
EXISTING CONTOUR
175,500 SF BUILDING
FFE: 191'
WAREHOUSE
100
US 301 S.
24" CURB AND GUTTER
HEAVY DUTY ASPHALT
FIRE ACCESS LANE
4' SIDEWALK
6' SIDEWALK
5' SIDEWALK
DRIVEWAY 2
OFFICE AREA
101
PROPERTY LINE
8' LANDSCAPE BUFFER
EX. PROPERTY LINE
APPROXIMATE STORMWATER POND
ARROWHEAD ROAD
-3.4%
2.8%
2.7%
-0.4%
2.4%
1
1
1

TC^2
ENGINEERING, PLLC
201 N. Front Street
Suite M-108
Wilmington, NC 28401
910-547-5856

NO.	REVISION	DATE
1	REVISED PER COMMENT	7/25

SAMET HARNETT COUNTY 1

OVERALL GRADING PLAN

ORIGINAL MAP SIZE
24" X 36"
DRAWN: BPE
CHECKED: WPC
PROJECT NO.:

SHEET:
C3.0

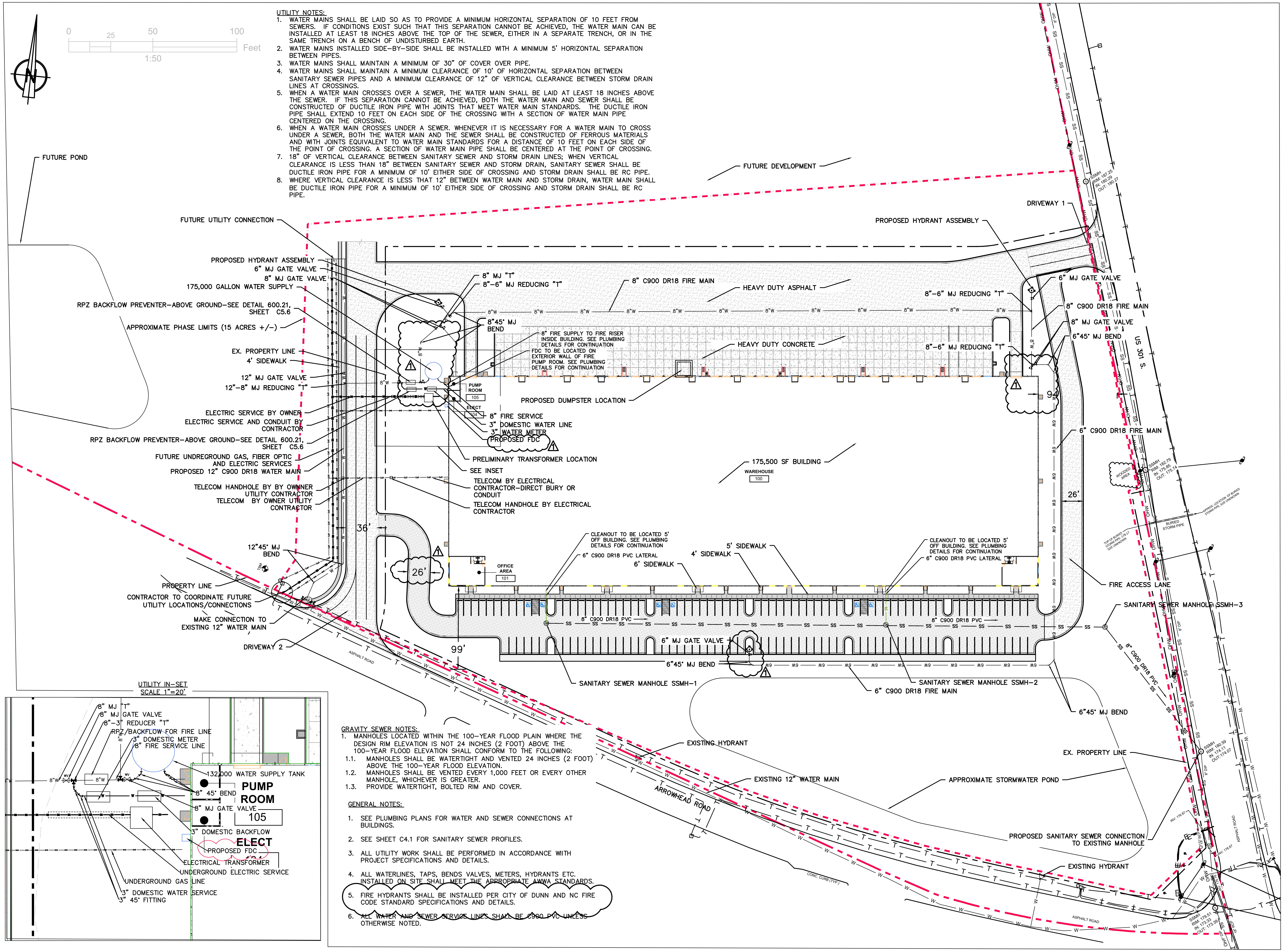
0
25
50
100
Feet
1:50
N
FUTURE POND
FUTURE DEVELOPMENT
FUTURE UTILITY CONNECTION
PROPOSED HYDRANT ASSEMBLY
6" MJ GATE VALVE
8" MJ GATE VALVE
175,000 GALLON WATER SUPPLY
RPZ BACKFLOW PREVENTER–ABOVE GROUND–SEE DETAIL 600.21, SHEET C5.6
APPROXIMATE PHASE LIMITS (15 ACRES +/–)
EX. PROPERTY LINE
4' SIDEWALK
12" MJ GATE VALVE
12"–8" MJ REDUCING "T"
ELECTRIC SERVICE BY OWNER
ELECTRIC SERVICE AND CONDUIT BY CONTRACTOR
RPZ BACKFLOW PREVENTER–ABOVE GROUND–SEE DETAIL 600.21, SHEET C5.6
FUTURE UNDREGROUND GAS, FIBER OPTIC AND ELECTRIC SERVICES
PROPOSED 12" C900 DR18 WATER MAIN
TELECOM HANDHOLE BY BY OWNNER UTILITY CONTRACTOR
TELECOM BY OWNER UTILITY CONTRACTOR
36'
12"45° MJ BEND
TBM
PROPERTY LINE
CONTRACTOR TO COORDINATE FUTURE UTILITY LOCATIONS/CONNECTIONS
MAKE CONNECTION TO EXISTING 12" WATER MAIN
DRIVEWAY 2
ASPHALT ROAD
8" MJ "T"
8"–6" MJ REDUCING "T"
8"45° MJ BEND
8" C900 DR18 FIRE MAIN
HEAVY DUTY ASPHALT
8"W
8" FIRE SUPPLY TO FIRE RISER INSIDE BUILDING. SEE PLUMBING DETAILS FOR CONTINUATION
FDC TO BE LOCATED ON EXTERIOR WALL OF FIRE PUMP ROOM. SEE PLUMBING DETAILS FOR CONTINUATION
HEAVY DUTY CONCRETE
PUMP ROOM
105
ELECT
104
PROPOSED DUMPSTER LOCATION
8" FIRE SERVICE
3" DOMESTIC WATER LINE
3" WATER METER
PROPOSED FDC
1
PRELIMINARY TRANSFORMER LOCATION
SEE INSET
TELECOM BY ELECTRICAL CONTRACTOR–DIRECT BURY OR CONDUIT
TELECOM HANDHOLE BY ELECTRICAL CONTRACTOR
175,500 SF BUILDING
WAREHOUSE
100
CLEANOUT TO BE LOCATED 5' OFF BUILDING. SEE PLUMBING DETAILS FOR CONTINUATION
6" C900 DR18 PVC LATERAL
5' SIDEWALK
4' SIDEWALK
6' SIDEWALK
OFFICE AREA
101
26'
99'
8" C900 DR18 PVC
SS
6" MJ GATE VALVE
6"45° MJ BEND
SANITARY SEWER MANHOLE SSMH-1
SANITARY SEWER MANHOLE SSMH-2
6" C900 DR18 FIRE MAIN
6"45° MJ BEND
DRIVEWAY 1
PROPOSED HYDRANT ASSEMBLY
6" MJ GATE VALVE
8"–6" MJ REDUCING "T"
8" C900 DR18 FIRE MAIN
8" MJ GATE VALVE
6"45° MJ BEND
8"–6" MJ REDUCING "T"
US 301 S.
94
6" C900 DR18 FIRE MAIN
26'
SSMH RIM: 187.25 IN: 180.29 OUT: 180.27
SSMH RIM: 182.79 IN: 175.85 OUT: 175.74
WOODED AREA
BURIED STORM PIPE
APPROX. LOCATION OF BURIED STORM PIPE, SIZE UNKNOWN
TOP OF BURIED STORM PIPE: 178.17 SIZE UNKNOWN
FIRE ACCESS LANE
SANITARY SEWER MANHOLE SSMH-3
8" C900 DR18 PVC
8" DIP
EXISTING HYDRANT
EXISTING 12" WATER MAIN
ARROWHEAD ROAD
APPROXIMATE STORMWATER POND
EX. PROPERTY LINE
SSMH RIM: 180.59 IN: 174.11 OUT: 174.07
PROPOSED SANITARY SEWER CONNECTION TO EXISTING MANHOLE
EXISTING HYDRANT
CONC. CURB (TYP.)
ASPHALT ROAD
INV: 176.87
INV: 176.67
18" RCP
SSMH RIM: 179.51 IN: 173.33 OUT: 173.39
UTILITY IN-SET
SCALE 1"=20'
8" MJ "T"
8" MJ GATE VALVE
8"–3" REDUCER "T"
RPZ/BACKFLOW FOR FIRE LINE
3" DOMESTIC METER
8" FIRE SERVICE LINE
WV
132,000 WATER SUPPLY TANK
8" 45° BEND
PUMP ROOM
8" MJ GATE VALVE
105
3" DOMESTIC BACKFLOW
ELECT
PROPOSED FDC
ELECTRICAL TRANSFORMER
UNDERGROUND ELECTRIC SERVICE
UNDERGROUND GAS LINE
3" DOMESTIC WATER SERVICE
3" 45° FITTING

UTILITY NOTES:

1. WATER MAINS SHALL BE LAID SO AS TO PROVIDE A MINIMUM HORIZONTAL SEPARATION OF 10 FEET FROM SEWERS. IF CONDITIONS EXIST SUCH THAT THIS SEPARATION CANNOT BE ACHIEVED, THE WATER MAIN CAN BE INSTALLED AT LEAST 18 INCHES ABOVE THE TOP OF THE SEWER, EITHER IN A SEPARATE TRENCH, OR IN THE SAME TRENCH ON A BENCH OF UNDISTURBED EARTH.
2. WATER MAINS INSTALLED SIDE–BY–SIDE SHALL BE INSTALLED WITH A MINIMUM 5' HORIZONTAL SEPARATION BETWEEN PIPES.
3. WATER MAINS SHALL MAINTAIN A MINIMUM OF 30" OF COVER OVER PIPE.
4. WATER MAINS SHALL MAINTAIN A MINIMUM CLEARANCE OF 10' OF HORIZONTAL SEPARATION BETWEEN SANITARY SEWER PIPES AND A MINIMUM CLEARANCE OF 12" OF VERTICAL CLEARANCE BETWEEN STORM DRAIN LINES AT CROSSINGS.
5. WHEN A WATER MAIN CROSSES OVER A SEWER, THE WATER MAIN SHALL BE LAID AT LEAST 18 INCHES ABOVE THE SEWER. IF THIS SEPARATION CANNOT BE ACHIEVED, BOTH THE WATER MAIN AND SEWER SHALL BE CONSTRUCTED OF DUCTILE IRON PIPE WITH JOINTS THAT MEET WATER MAIN STANDARDS. THE DUCTILE IRON PIPE SHALL EXTEND 10 FEET ON EACH SIDE OF THE CROSSING WITH A SECTION OF WATER MAIN PIPE CENTERED ON THE CROSSING.
6. WHEN A WATER MAIN CROSSES UNDER A SEWER. WHENEVER IT IS NECESSARY FOR A WATER MAIN TO CROSS UNDER A SEWER, BOTH THE WATER MAIN AND THE SEWER SHALL BE CONSTRUCTED OF FERROUS MATERIALS AND WITH JOINTS EQUIVALENT TO WATER MAIN STANDARDS FOR A DISTANCE OF 10 FEET ON EACH SIDE OF THE POINT OF CROSSING. A SECTION OF WATER MAIN PIPE SHALL BE CENTERED AT THE POINT OF CROSSING.
7. 18" OF VERTICAL CLEARANCE BETWEEN SANITARY SEWER AND STORM DRAIN LINES; WHEN VERTICAL CLEARANCE IS LESS THAN 18" BETWEEN SANITARY SEWER AND STORM DRAIN, SANITARY SEWER SHALL BE DUCTILE IRON PIPE FOR A MINIMUM OF 10' EITHER SIDE OF CROSSING AND STORM DRAIN SHALL BE RC PIPE.
8. WHERE VERTICAL CLEARANCE IS LESS THAT 12" BETWEEN WATER MAIN AND STORM DRAIN, WATER MAIN SHALL BE DUCTILE IRON PIPE FOR A MINIMUM OF 10' EITHER SIDE OF CROSSING AND STORM DRAIN SHALL BE RC PIPE.

GRAVITY SEWER NOTES:

1. MANHOLES LOCATED WITHIN THE 100–YEAR FLOOD PLAIN WHERE THE DESIGN RIM ELEVATION IS NOT 24 INCHES (2 FOOT) ABOVE THE 100–YEAR FLOOD ELEVATION SHALL CONFORM TO THE FOLLOWING:
   - 1.1. MANHOLES SHALL BE WATERTIGHT AND VENTED 24 INCHES (2 FOOT) ABOVE THE 100–YEAR FLOOD ELEVATION.
   - 1.2. MANHOLES SHALL BE VENTED EVERY 1,000 FEET OR EVERY OTHER MANHOLE, WHICHEVER IS GREATER.
   - 1.3. PROVIDE WATERTIGHT, BOLTED RIM AND COVER.

GENERAL NOTES:

1. SEE PLUMBING PLANS FOR WATER AND SEWER CONNECTIONS AT BUILDINGS.
2. SEE SHEET C4.1 FOR SANITARY SEWER PROFILES.
3. ALL UTILITY WORK SHALL BE PERFORMED IN ACCORDANCE WIITH PROJECT SPECIFICATIONS AND DETAILS.
4. ALL WATERLINES, TAPS, BENDS VALVES, METERS, HYDRANTS ETC. INSTALLED ON SITE SHALL MEET THE APPROPRIATE AWWA STANDARDS.
5. FIRE HYDRANTS SHALL BE INSTALLED PER CITY OF DUNN AND NC FIRE CODE STANDARD SPECIFICATIONS AND DETAILS.
6. ~~ALL WATER AND SEWER SERVICE LINES SHALL BE C900 PVC UNLESS~~ OTHERWISE NOTED.

TC²
ENGINEERING, PLLC
201 N. Front Street
Suite M-108
Wilmington, NC 28401
910-547-5856

NO.	REVISION	DATE
1	REVISED PER COMMENTS	7/16/15

SAMET HARNETT COUNTY 1

PRELIMINARY WATER AND SEWER LAYOUT

ORIGINAL MAP SIZE
24" X 36"
DRAWN: BPE
CHECKED: WPC
PROJECT NO.:

SHEET:
C4.0

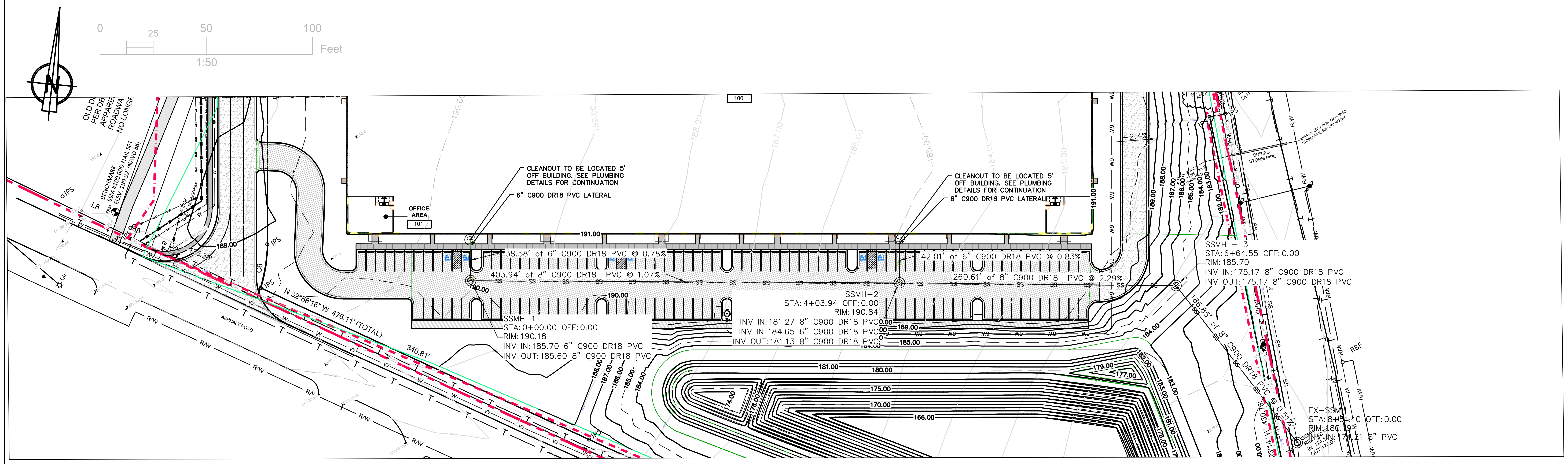
0
25
50
100
Feet
1:50
N
CLEANOUT TO BE LOCATED 5' OFF BUILDING. SEE PLUMBING DETAILS FOR CONTINUATION
6" C900 DR18 PVC LATERAL
CLEANOUT TO BE LOCATED 5' OFF BUILDING. SEE PLUMBING DETAILS FOR CONTINUATION
6" C900 DR18 PVC LATERAL
OFFICE AREA
101
100
38.58' of 6" C900 DR18 PVC @ 0.78%
42.01' of 6" C900 DR18 PVC @ 0.83%
403.94' of 8" C900 DR18 PVC @ 1.07%
260.61' of 8" C900 DR18 PVC @ 2.29%
186.85' of 8" C900 DR18 PVC @ 0.51%
SSMH-1
STA: 0+00.00 OFF: 0.00
RIM: 190.18
INV IN: 185.70 6" C900 DR18 PVC
INV OUT: 185.60 8" C900 DR18 PVC
SSMH-2
STA: 4+03.94 OFF: 0.00
RIM: 190.84
INV IN: 181.27 8" C900 DR18 PVC
INV IN: 184.65 6" C900 DR18 PVC
INV OUT: 181.13 8" C900 DR18 PVC
SSMH - 3
STA: 6+64.55 OFF: 0.00
RIM: 185.70
INV IN: 175.17 8" C900 DR18 PVC
INV OUT: 175.17 8" C900 DR18 PVC
EX-SSMH
STA: 8+51.40 OFF: 0.00
RIM: 180.19
INV IN: 174.21 8" PVC
N 32°58'16" W 476.11' (TOTAL)
340.81'
ASPHALT ROAD
BENCHMARK
R/W
RBF
BURIED STORM PIPE
2.4%
191.00
190.00
189.00
185.00
181.00
180.00
179.00
177.00
175.00
170.00
166.00
IPS

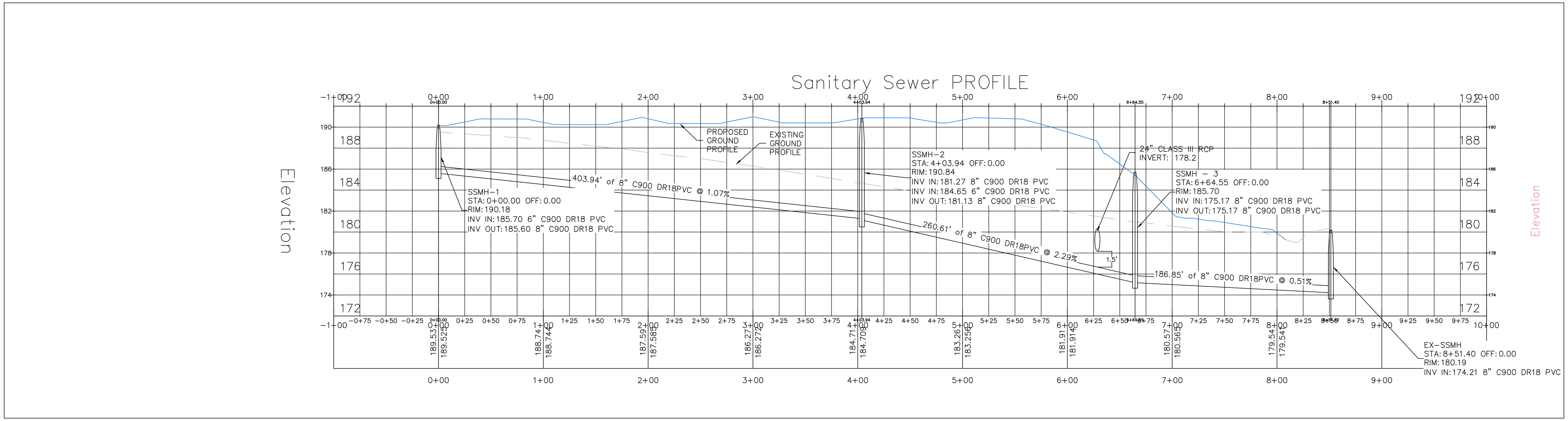

TC²
ENGINEERING, PLLC
201 N. Front Street
Suite M-108
Wilmington, NC 28401
910-547-5856

NO.	REVISION	DATE

SAMET HARNETT COUNTY 1

SANITARY SEWER PROFILE

ORIGINAL MAP SIZE
24" X 36"
DRAWN: BPE
CHECKED: WPC
PROJECT NO.:

SHEET:
C4.1

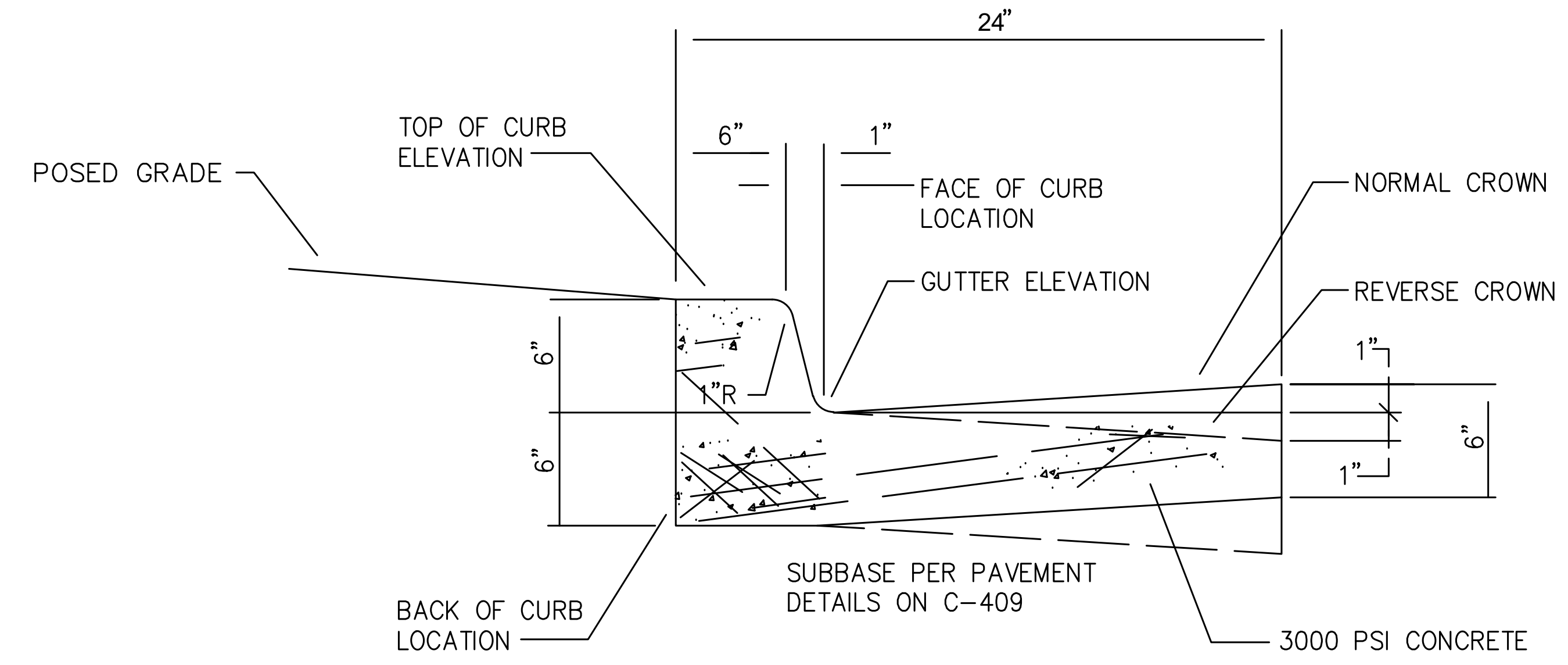
24"
6"
1"
TOP OF CURB
ELEVATION
POSED GRADE
FACE OF CURB
LOCATION
GUTTER ELEVATION
NORMAL CROWN
REVERSE CROWN
1"R
6"
6"
1"
1"
6"
BACK OF CURB
LOCATION
SUBBASE PER PAVEMENT
DETAILS ON C-409
3000 PSI CONCRETE

NOTES:

1. USE NORMAL OR REVERSE CROWN TO MATCH DIRECTION OF PAVEMENT SLOPE.
2. EXPANSION JOINTS: 1/2" WIDE, FULL DEPTH, AT 50' INTERVALS, TRANSVERSELY, AT ABUTTING STRUCTURES AND AT DRIVEWAYS, TANGENT POINTS OF RADIUS RETURNS AND STREET INTERSECTIONS.
3. CONTRACTION JOINTS: 1" DEEP SAWCUTS ON 10 FT. CENTERS TRANSVERSLEY.

1 C-5.0 24" CURB & GUTTER

SCALE: N.T.S.

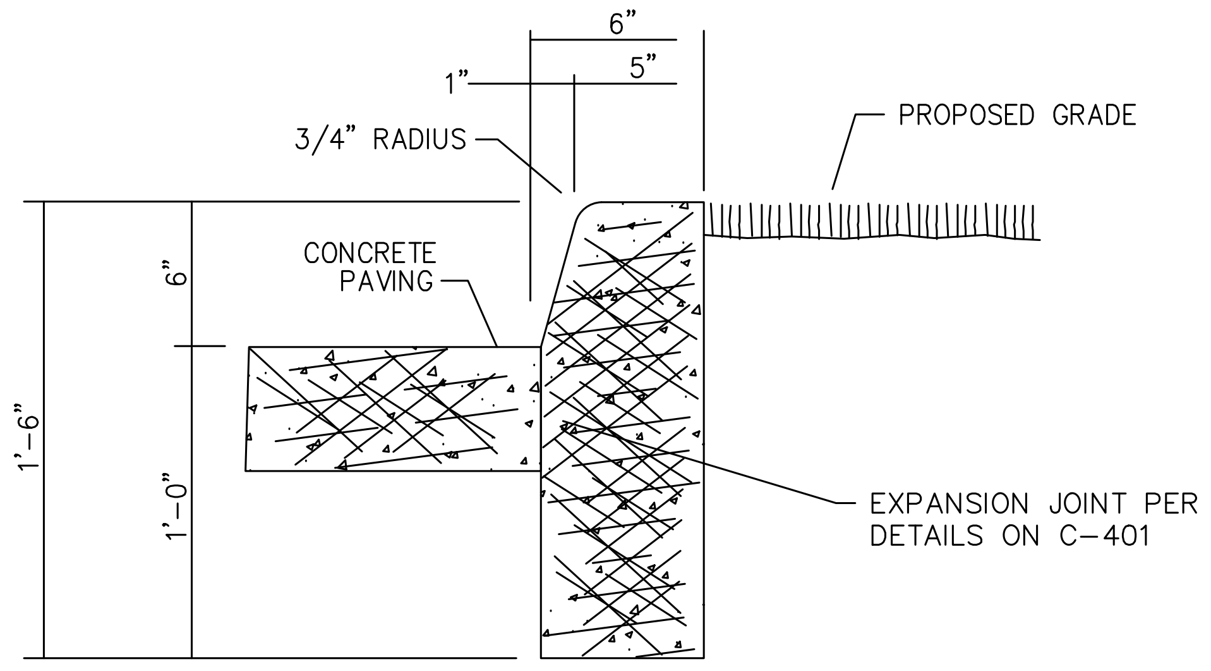
6"
5"
1"
3/4" RADIUS
PROPOSED GRADE
CONCRETE
PAVING
6"
1'-6"
1'-0"
EXPANSION JOINT PER
DETAILS ON C-401

2 C-5.0 HEADER CURB

SCALE: N.T.S.

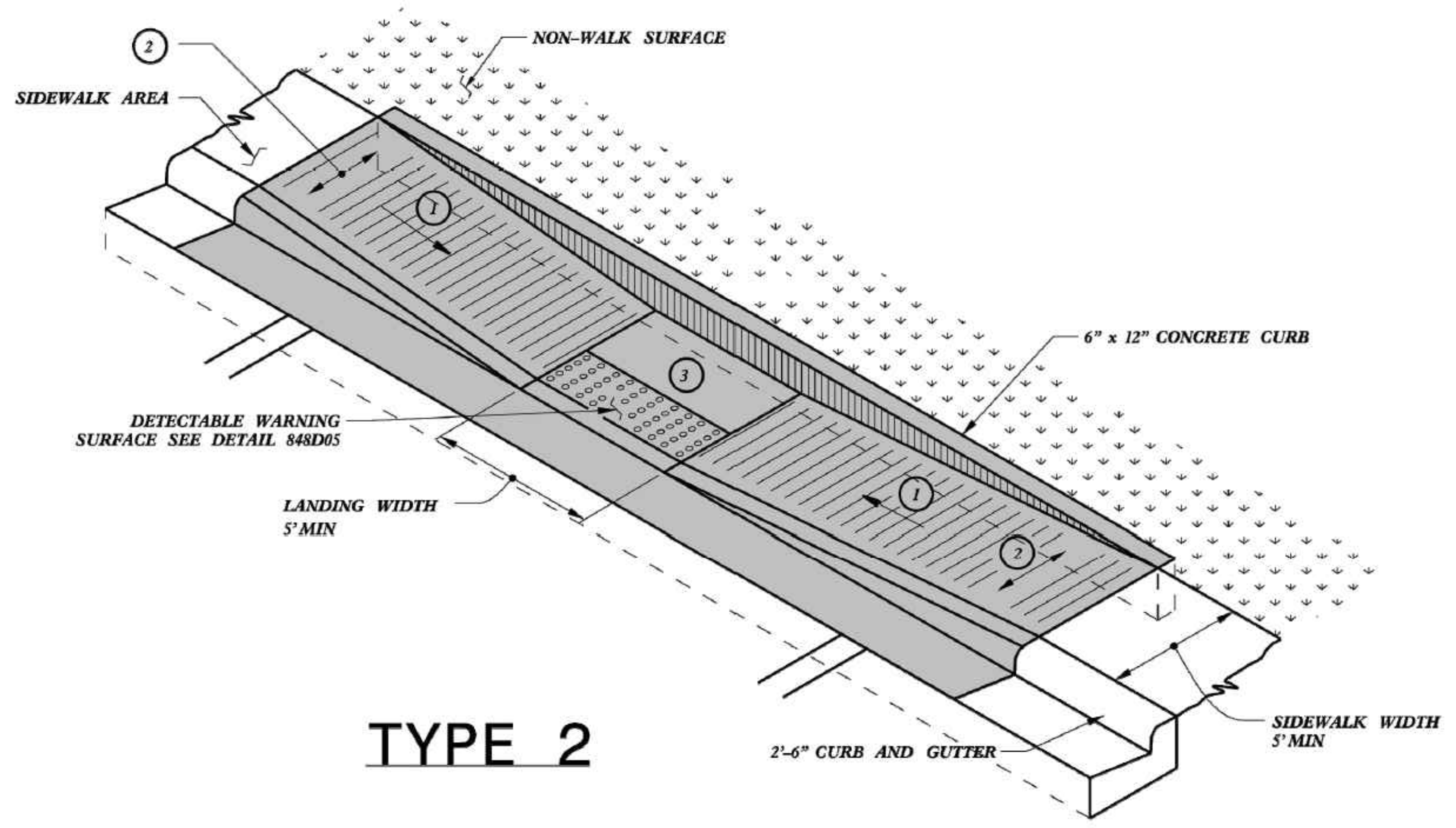
2
NON-WALK SURFACE
SIDEWALK AREA
1
3
6" x 12" CONCRETE CURB
DETECTABLE WARNING
SURFACE SEE DETAIL 848D05
LANDING WIDTH
5'MIN
1
2
SIDEWALK WIDTH
5'MIN
TYPE 2
2'-6" CURB AND GUTTER

① 8.33% (12:1) MAX RAMP SLOPE

② CROSS SLOPE: 2.00%

③ CURB RAMPS REQUIRE A (4'-0") MINIMUM LANDING WITH A MAXIMUM CROSS SLOPE AND LONGITUDINAL SLOPE OF 2.00% WHERE PEDESTRIANS PERFORM TURNING MANEUVERS. SLOPE TO DRAIN TO CURB.

3 C-5.0 NCDOT ADA RAMP TYPE 2

SCALE: N.T.S.

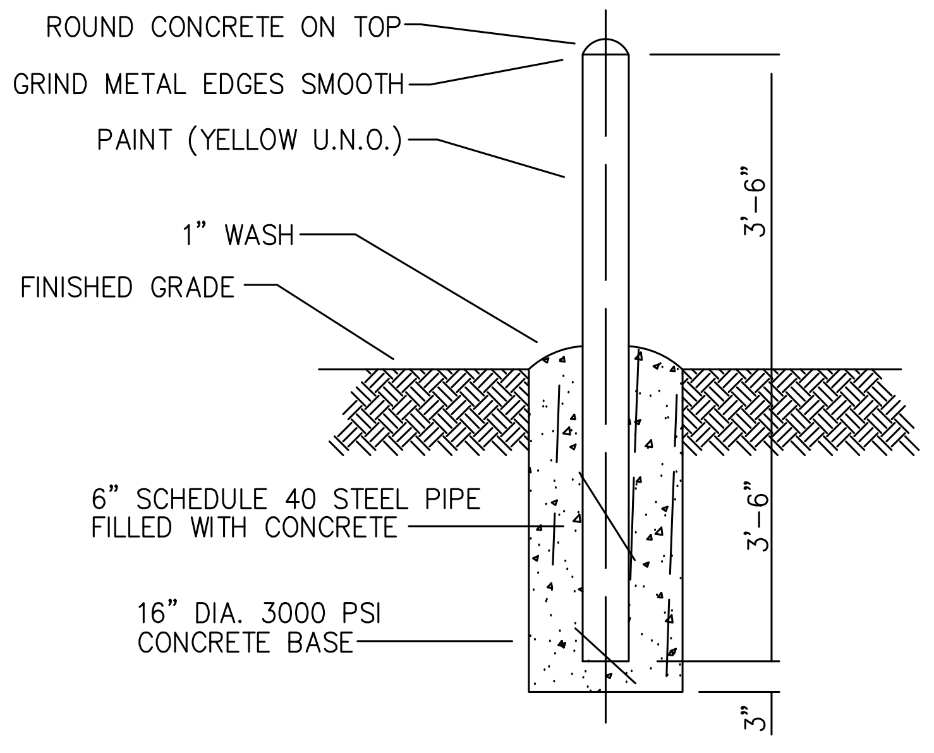
ROUND CONCRETE ON TOP
GRIND METAL EDGES SMOOTH
PAINT (YELLOW U.N.O.)
1" WASH
FINISHED GRADE
3'-6"
3'-6"
6" SCHEDULE 40 STEEL PIPE
FILLED WITH CONCRETE
16" DIA. 3000 PSI
CONCRETE BASE
3"

SECTION IN EARTH AGGREGATE

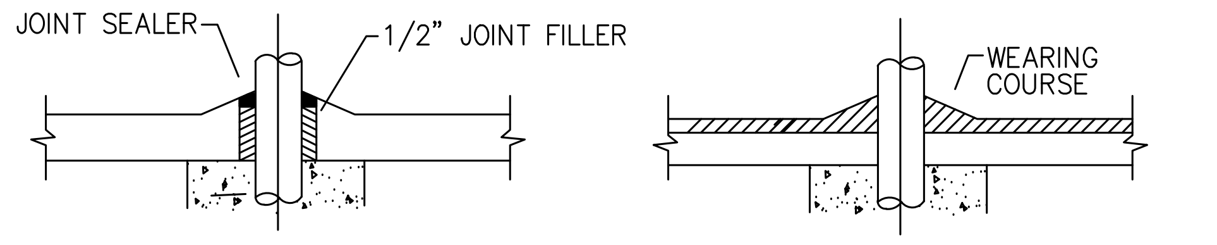
JOINT SEALER
1/2" JOINT FILLER
WEARING
COURSE

SECTION IN CONCRETE PAVEMENT SECTION IN BITUMINOUS PAVEMENT

4 C-5.0 BOLLARD DETAIL

SCALE: N.T.S.

TC^2
ENGINEERING, PLLC
201 N. Front Street
Suite M-108
Wilmington, NC 28401
910-547-5856

NO.	REVISION	DATE

SAMET HARNETT COUNTY 1

CONSTRUCTION DETAILS

ORIGINAL MAP SIZE
24" X 36"
DRAWN: BPE
CHECKED: WPC
PROJECT NO.:

SHEET:

C5.0

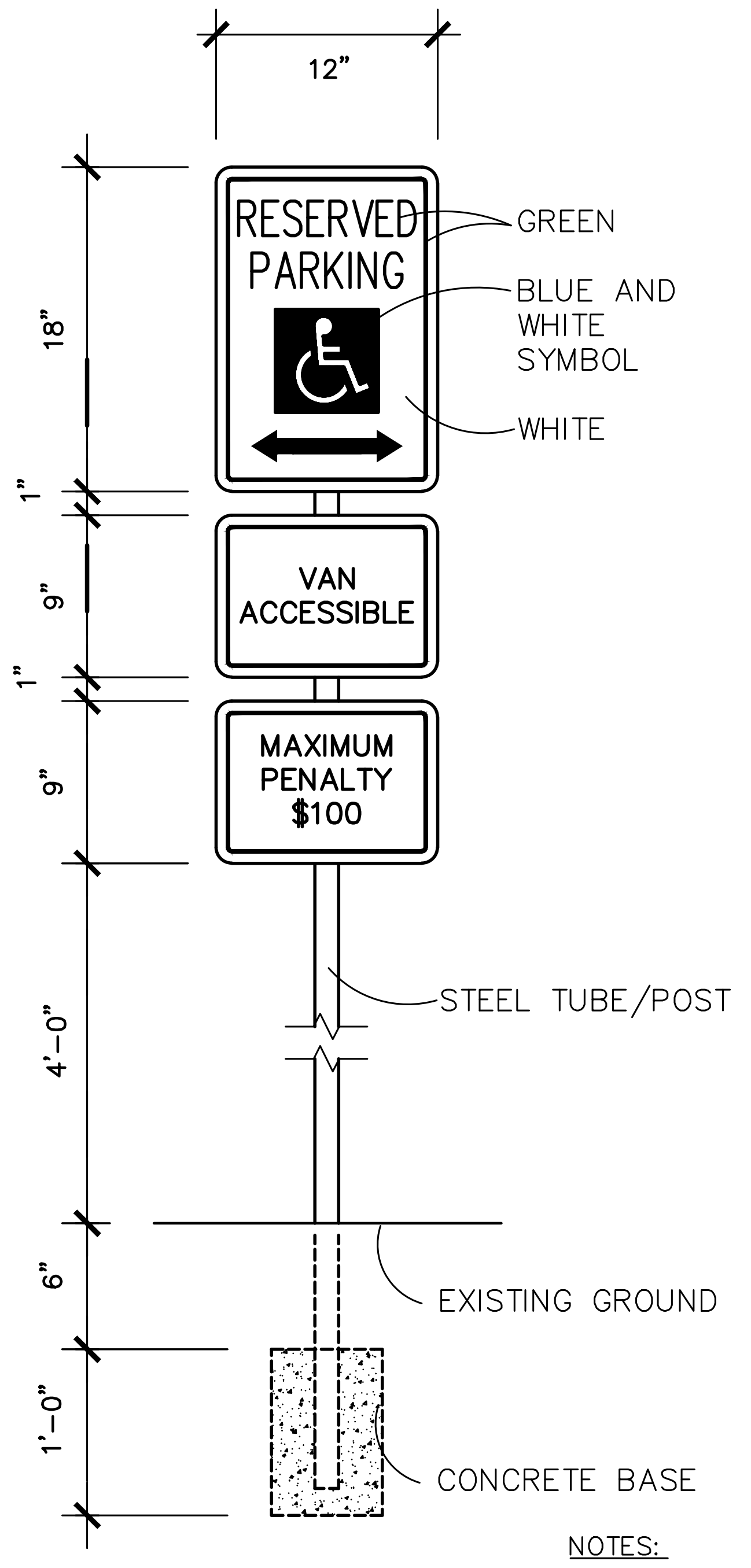
12"
18"
1"
9"
1"
9"
4'-0"
6"
1'-0"
RESERVED PARKING
GREEN
BLUE AND WHITE SYMBOL
WHITE
VAN ACCESSIBLE
MAXIMUM PENALTY $100
STEEL TUBE/POST
EXISTING GROUND
CONCRETE BASE

HANDICAPPED PARKING SIGN
NOT TO SCALE

NOTES:

1. PROVIDE ACCESSIBLE PARKING SIGN AT ALL HANDICAP SPACES.
2. PROVIDE "VAN ACCESSIBLE" SIGN AS REQUIRED ON PLANS.

1 C-5.1 HANDICAP PARKING SIGN

SCALE: N.T.S.

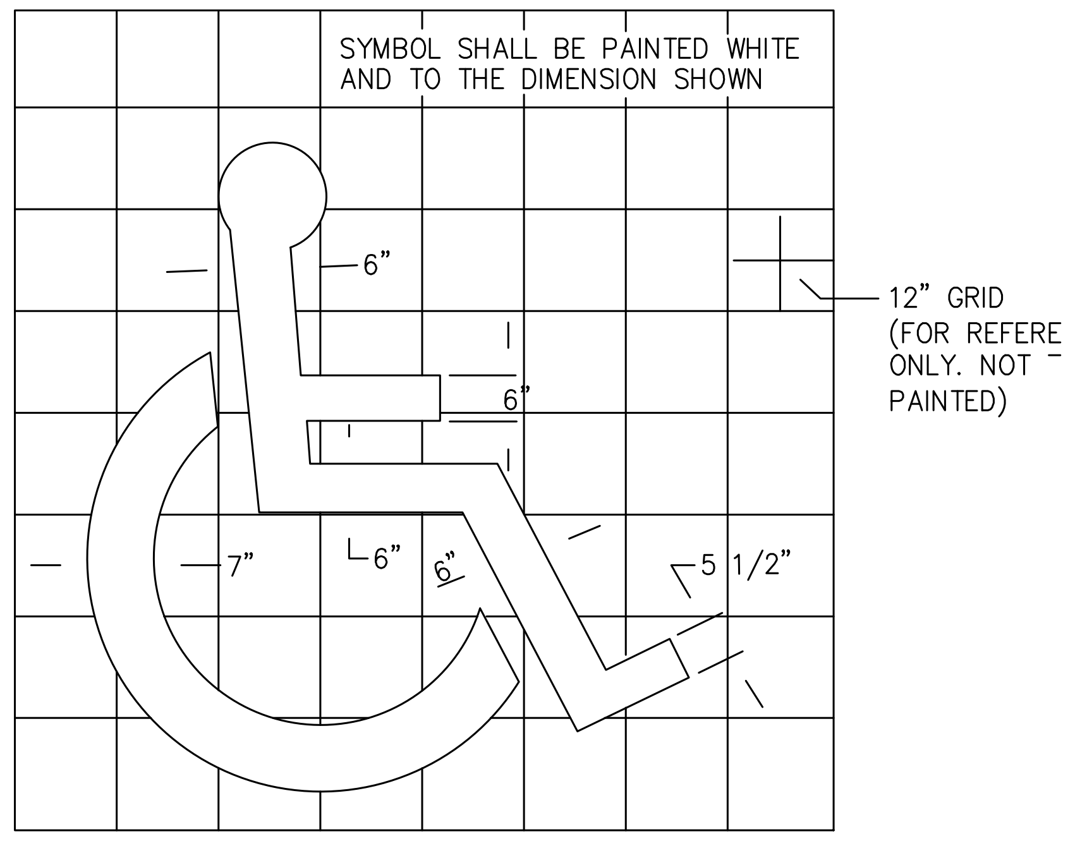
SYMBOL SHALL BE PAINTED WHITE AND TO THE DIMENSION SHOWN
6"
6"
7"
6"
6"
5 1/2"
12" GRID (FOR REFERE ONLY. NOT PAINTED)

4 C-5.4 HANDICAP MARKING

SCALE: N.T.S.

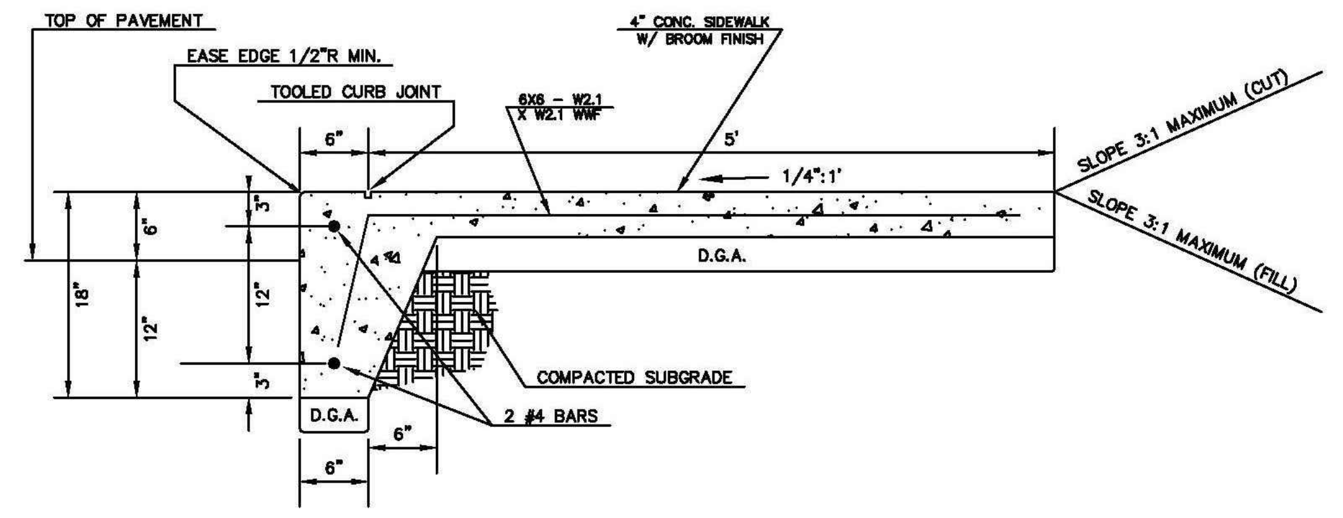
TOP OF PAVEMENT
EASE EDGE 1/2"R MIN.
TOOLED CURB JOINT
6X6 – W2.1 X W2.1 WWF
4" CONC. SIDEWALK W/ BROOM FINISH
6"
5'
1/4":1'
SLOPE 3:1 MAXIMUM (CUT)
SLOPE 3:1 MAXIMUM (FILL)
D.G.A.
18"
6"
12"
3"
12"
3"
COMPACTED SUBGRADE
D.G.A.
6"
2 #4 BARS
6"

NOTES

ALL CONCRETE SHALL BE K.D.O.T. CLASS "A"

A TWO (2) INCH LIFT (COMPACTED) OF DENSE GRADED AGGREGATE SHALL BE INSTALLED PRIOR TO PLACEMENT OF CONCRETE.

CONTRACTION JOINTS SHALL BE PLACED AT FIVE (5) FOOT INTERVALS.

EXPANSION JOINTS SHALL BE PLACED AT FIFTY (50) FOOT INTERVALS AND ALONG ALL EDGES BUTTED NEXT TO FIXED OBJECTS.

MAXIMUM SLOPE ACROSS SIDEWALK SHALL BE 1/4" PER FOOT TOWARD ROAD UNLESS OTHERWISE NOTED.

TURNDOWN SIDEWALK DETAIL
(TYPICAL SECTION)
(N.T.S)

3 C-5.1 SIDEWALK/CURB TURNDOWN DETAIL

SCALE: N.T.S.

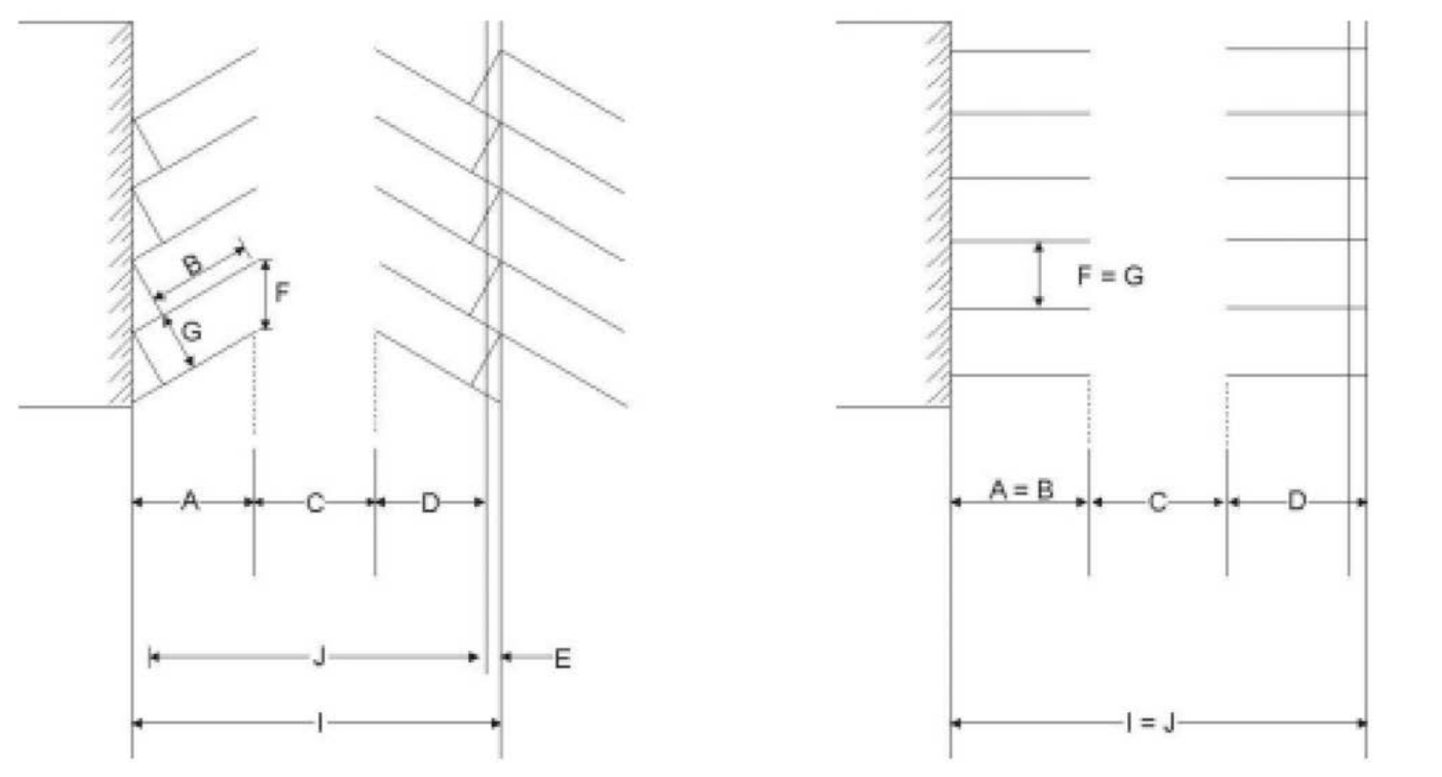
B
G
F
A
C
D
J
E
I
F = G
A = B
C
D
I = J

		Angle			
Label	Dimension	45	60	75	90
A	Stall Depth to Wall	17	18.5	19	18
B	Stall Depth Parallel to Vehicle	18	18	18	18
C	Aisle Width	12	16	22	25
D	Stall Depth to Interlock	15	17	18	18
E	Stall Depth Reduction due to Interlock	2	1.5	1	0
F	Stall Width (Parallel to Aisle)	12.7	10.4	9.3	9
G	Stall Width Perpendicular to Vehicle	9	9	9	9
I	Module Width Wall to Wall	46	54	60	61
J	Module Width Interlock to Interlock	42	51	58	61

2 C-5.1 PARKING DIMENSION DETAILS

SCALE: N.T.S.

TC^2
ENGINEERING, PLLC
201 N. Front Street
Suite M-108
Wilmington, NC 28401
910-547-5856

NO.	REVISION	DATE

SAMET HARNETT COUNTY 1

CONSTRUCTION DETAILS

ORIGINAL MAP SIZE
24" X 36"
DRAWN: BPE
CHECKED: WPC
PROJECT NO.:

SHEET:
C5.1

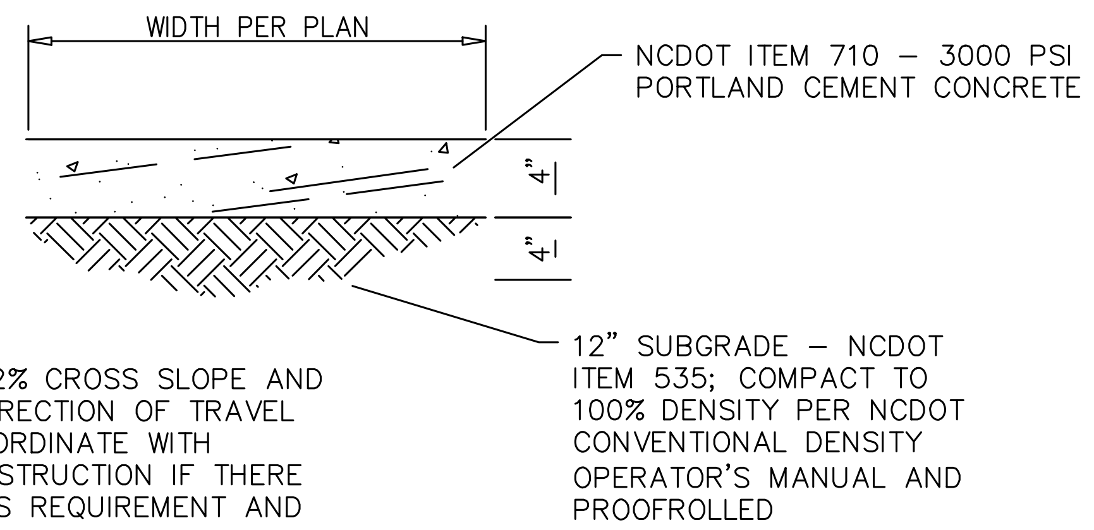
WIDTH PER PLAN
NCDOT ITEM 710 – 3000 PSI
PORTLAND CEMENT CONCRETE
4"
4"
12" SUBGRADE – NCDOT ITEM 535; COMPACT TO 100% DENSITY PER NCDOT CONVENTIONAL DENSITY OPERATOR'S MANUAL AND PROOFROLLED

NOTE:

1. ALL SIDEWALKS SHALL HAVE A 1-2% CROSS SLOPE AND MAXIMUM 5% RUNNING SLOPE IN DIRECTION OF TRAVEL ALONG ADA ACCESSIBLE PATH. COORDINATE WITH ENGINEER PRIOR TO SIDEWALK CONSTRUCTION IF THERE IS ANY DISCREPANCY BETWEEN THIS REQUIREMENT AND THE GRADING PLAN/SPOT ELEVATIONS.
2. INSTALL EXPANSION JOINTS AT CONNECTION TO BUILDING FOUNDATIONS, SIDEWALKS, OR CURB AND GUTTERS. INSTALL CONTRACTION AND EXPANSION JOINTS PER SPECIFICATIONS.
3. CONTROL JOINTS SHALL BE EVERY 5 FEET
4. CONCRETE SHALL HAVE LIGHT BROOM FINISH
5. THIS SECTION SHALL BE USED ON THE CONCRETE TO BE USED AS A DUMPSTER PAD

1 C-5.2 STANDARD DUTY CONCRETE

SCALE: N.T.S.

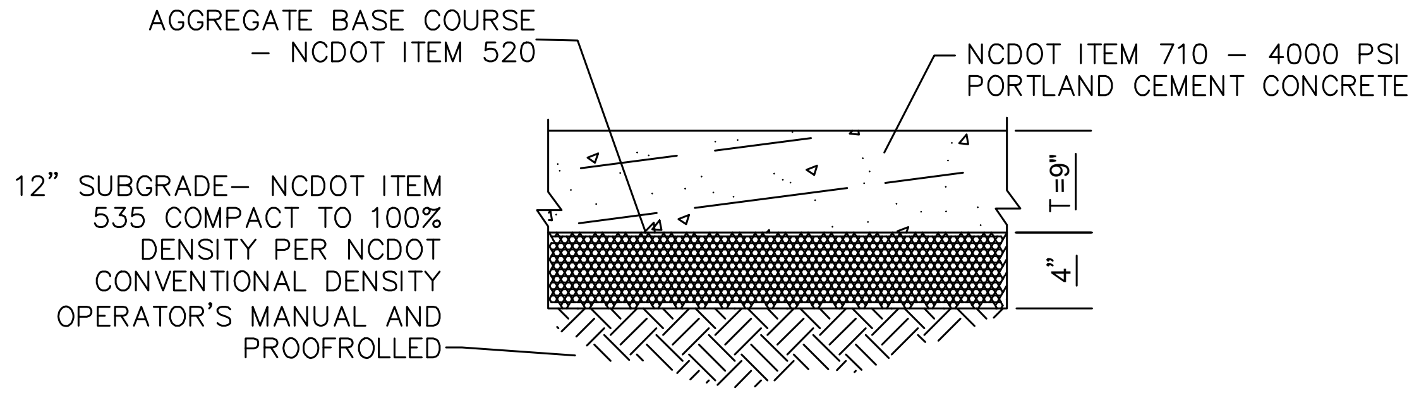
AGGREGATE BASE COURSE – NCDOT ITEM 520
NCDOT ITEM 710 – 4000 PSI
PORTLAND CEMENT CONCRETE
12" SUBGRADE– NCDOT ITEM 535 COMPACT TO 100% DENSITY PER NCDOT CONVENTIONAL DENSITY OPERATOR'S MANUAL AND PROOFROLLED
T=9"
4"

2 C-5.2 HEAVY DUTY CONCRETE PAVING

SCALE: N.T.S.

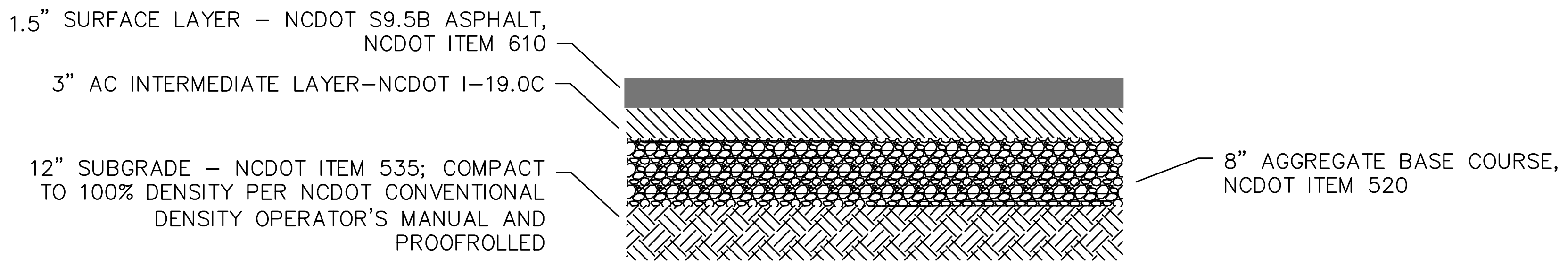
1.5" SURFACE LAYER – NCDOT S9.5B ASPHALT, NCDOT ITEM 610
3" AC INTERMEDIATE LAYER–NCDOT I–19.0C
12" SUBGRADE – NCDOT ITEM 535; COMPACT TO 100% DENSITY PER NCDOT CONVENTIONAL DENSITY OPERATOR'S MANUAL AND PROOFROLLED
8" AGGREGATE BASE COURSE, NCDOT ITEM 520

NOTE:

1. ALL SECTIONS PER GEOTECHNICAL REPORT PROVIDED BY ECS SOUTHEAST, LLP IN AUGUST 2021
2. PRIME COAT, NCDOT ITEM 600, IS TO BE APPLIED TO THE SURFACE OF THE 8" AGGREGATE BASE COURSE ONLY IF THE BASE COURSE IS TO BE LEFT EXPOSED FOR GREATER THAN 14 DAYS.

3 C-5.2 HEAVY DUTY ASPHALT PAVING

SCALE: N.T.S.

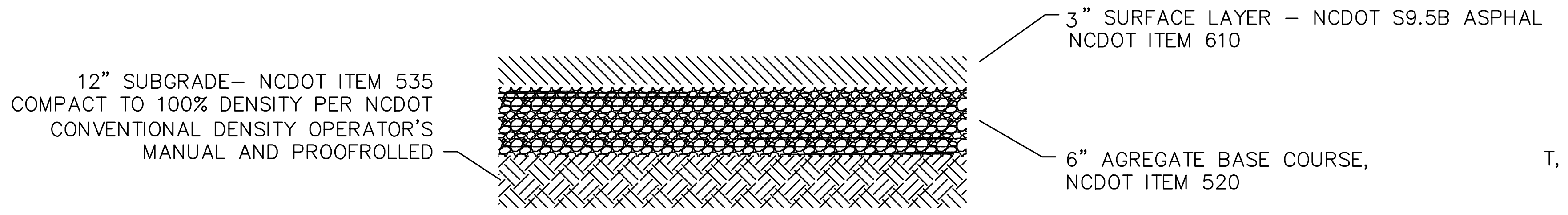
3" SURFACE LAYER – NCDOT S9.5B ASPHAL NCDOT ITEM 610
12" SUBGRADE– NCDOT ITEM 535 COMPACT TO 100% DENSITY PER NCDOT CONVENTIONAL DENSITY OPERATOR'S MANUAL AND PROOFROLLED
6" AGREGATE BASE COURSE, NCDOT ITEM 520
T,

NOTE:

1. ALL SECTIONS PER GEOTECHNICAL REPORT PROVIDED BY ECS SOUTHEAST, LLP IN AUGUST 2021
2. PRIME COAT, NCDOT ITEM 600, IS TO BE APPLIED TO THE SURFACE OF THE 8" AGGREGATE BASE COURSE ONLY IF THE BASE COURSE IS TO BE LEFT EXPOSED FOR GREATER THAN 14 DAYS.

4 C-5.2 LIGHT DUTY ASPHALT PAVING

SCALE: N.T.S.

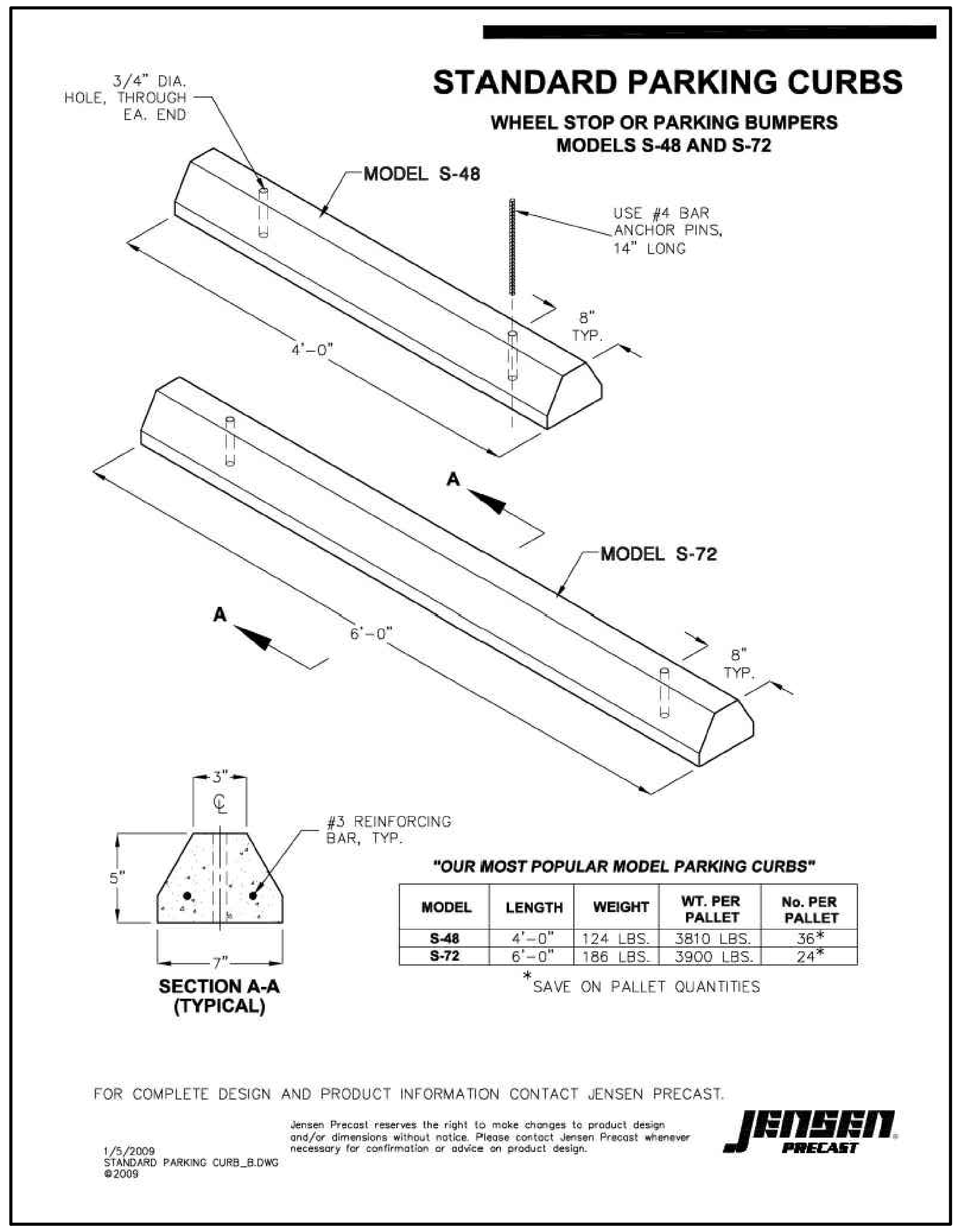

STANDARD PARKING CURBS

WHEEL STOP OR PARKING BUMPERS
MODELS S-48 AND S-72

3/4" DIA. HOLE, THROUGH EA. END
MODEL S-48
USE #4 BAR ANCHOR PINS, 14" LONG
8" TYP.
4'–0"
A
MODEL S-72
A
6'–0"
8" TYP.
3"
℄
#3 REINFORCING BAR, TYP.
5"
7"

SECTION A-A (TYPICAL)

"OUR MOST POPULAR MODEL PARKING CURBS"

MODEL	LENGTH	WEIGHT	WT. PER PALLET	No. PER PALLET
S-48	4'–0"	124 LBS.	3810 LBS.	36*
S-72	6'–0"	186 LBS.	3900 LBS.	24*

*SAVE ON PALLET QUANTITIES

FOR COMPLETE DESIGN AND PRODUCT INFORMATION CONTACT JENSEN PRECAST.

Jensen Precast reserves the right to make changes to product design and/or dimensions without notice. Please contact Jensen Precast whenever necessary for confirmation or advice on product design.

JENSEN PRECAST

1/5/2009
STANDARD PARKING CURB_B.DWG
©2009

5 C-5.2 CURB STOP

SCALE: N.T.S.

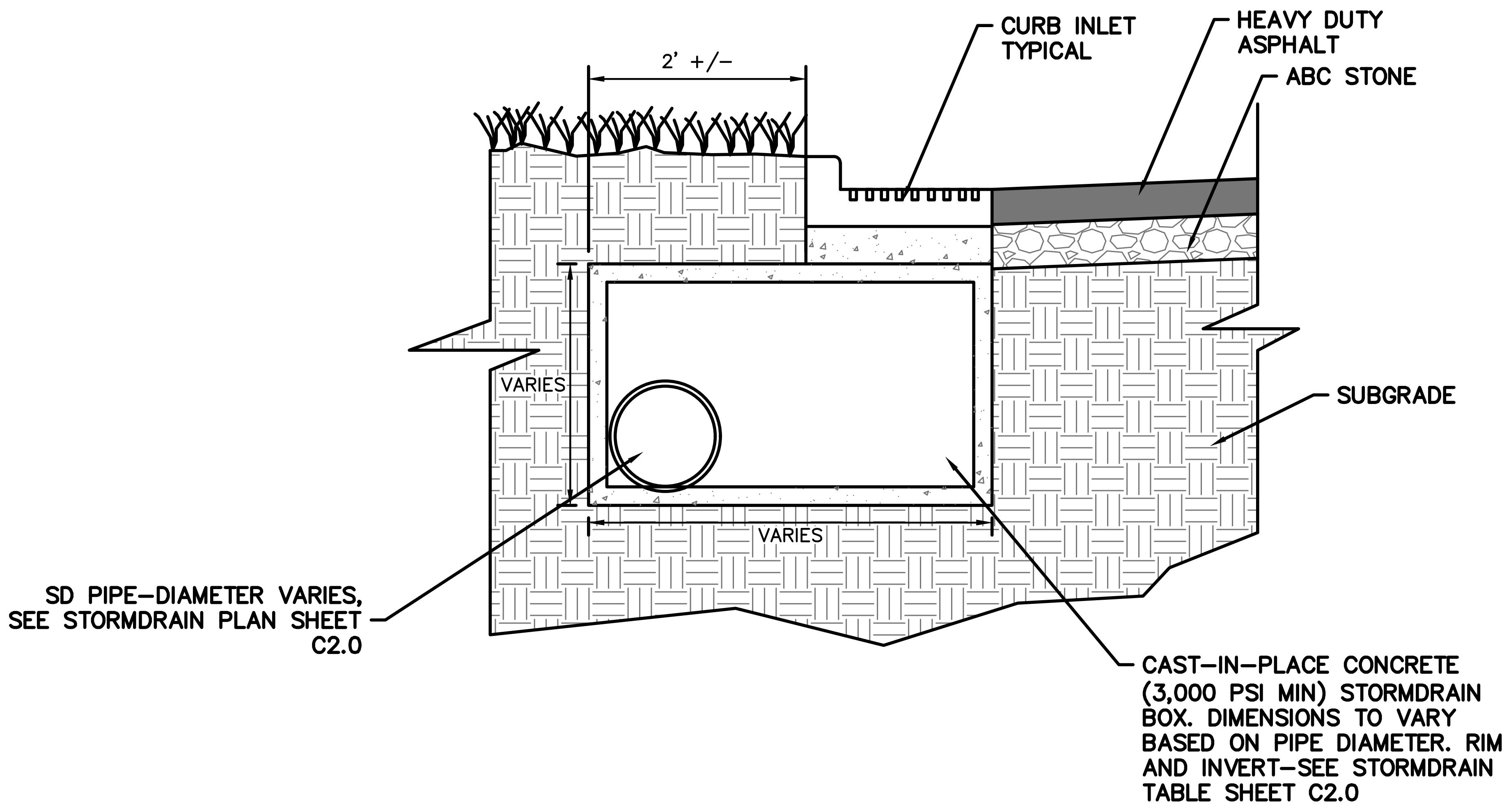
2' +/-
CURB INLET TYPICAL
HEAVY DUTY ASPHALT
ABC STONE
SUBGRADE
VARIES
VARIES
SD PIPE–DIAMETER VARIES, SEE STORMDRAIN PLAN SHEET C2.0
CAST–IN–PLACE CONCRETE (3,000 PSI MIN) STORMDRAIN BOX. DIMENSIONS TO VARY BASED ON PIPE DIAMETER. RIM AND INVERT–SEE STORMDRAIN TABLE SHEET C2.0

6 C-5.2 CURB INLETS CI-6B, 7B AND 8B

SCALE: N.T.S.

TC²
ENGINEERING, PLLC
201 N. Front Street
Suite M-108
Wilmington, NC 28401
910-547-5856

NO.	REVISION	DATE

SAMET HARNETT COUNTY 1

CONSTRUCTION DETAILS

ORIGINAL MAP SIZE
24" X 36"
DRAWN: BPE
CHECKED: WPC
PROJECT NO.:

SHEET:
C5.2

STATE OF
NORTH CAROLINA
DEPT. OF TRANSPORTATION
DIVISION OF HIGHWAYS
RALEIGH, N.C.

1-12

ENGLISH STANDARD DRAWING FOR
METHOD OF PIPE INSTALLATION
RIGID PIPE

SHEET 2 OF 3
300.01

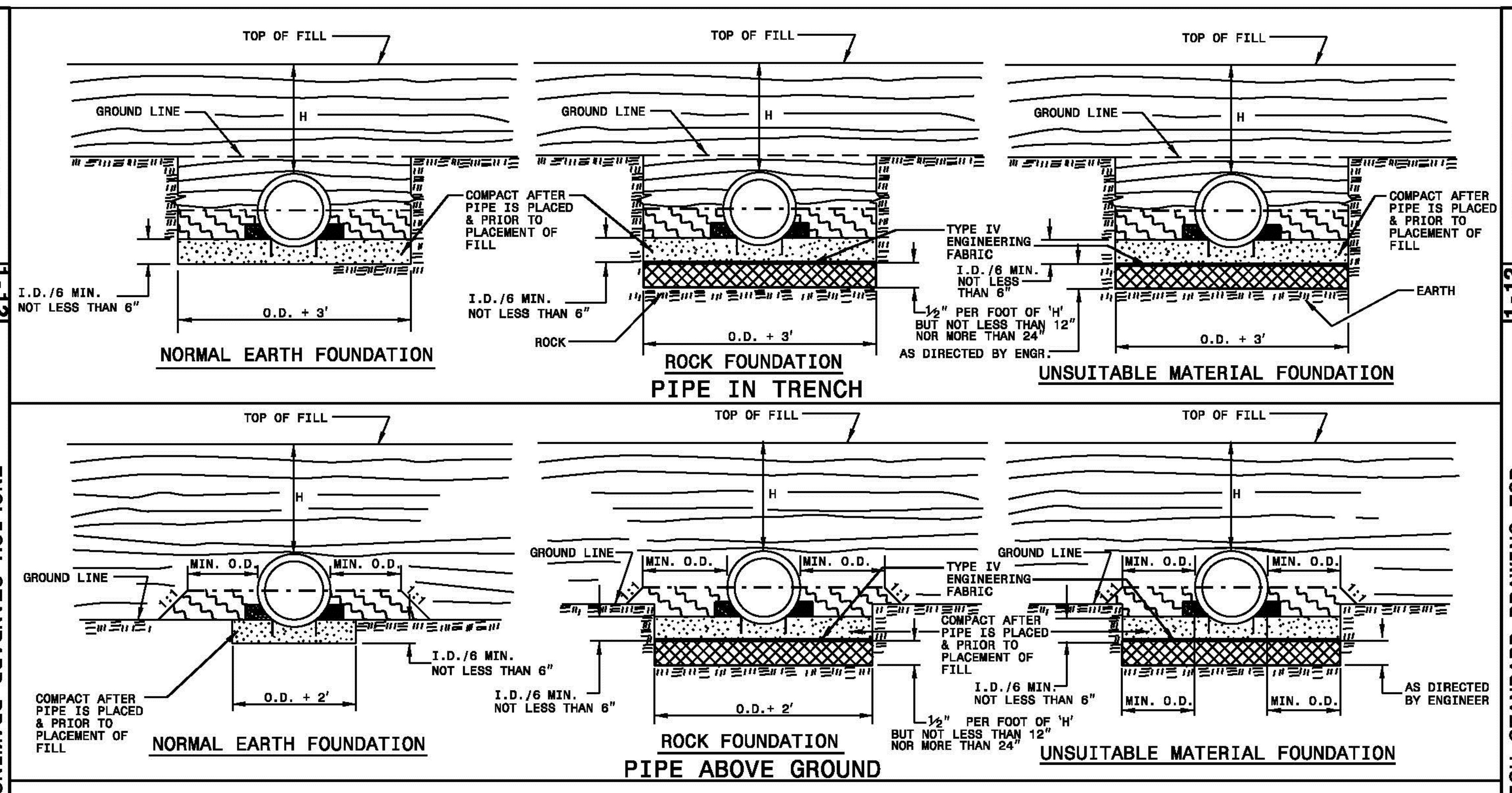
TOP OF FILL
GROUND LINE
H
COMPACT AFTER PIPE IS PLACED & PRIOR TO PLACEMENT OF FILL
I.D./6 MIN. NOT LESS THAN 6"
O.D. + 3'
NORMAL EARTH FOUNDATION
TYPE IV ENGINEERING FABRIC
I.D./6 MIN. NOT LESS THAN 6"
ROCK
½" PER FOOT OF 'H' BUT NOT LESS THAN 12" NOR MORE THAN 24" AS DIRECTED BY ENGR.
ROCK FOUNDATION
PIPE IN TRENCH
EARTH
UNSUITABLE MATERIAL FOUNDATION
MIN. O.D.
O.D. + 2'
COMPACT AFTER PIPE IS PLACED & PRIOR TO PLACEMENT OF FILL
NORMAL EARTH FOUNDATION
ROCK FOUNDATION
PIPE ABOVE GROUND
AS DIRECTED BY ENGINEER
UNSUITABLE MATERIAL FOUNDATION

GENERAL NOTES:

I.D. = THE MAXIMUM HORIZONTAL INSIDE DIAMETER DIMENSION.

O.D. = THE MAXIMUM HORIZONTAL OUTSIDE DIAMETER DIMENSION.

H = THE FILL HEIGHT MEASURED VERTICALLY AT ANY POINT ALONG THE PIPE FROM THE TOP OF THE PIPE TO THE TOP OF THE EMBANKMENT AT THAT POINT.

■ TAKE CARE TO FULLY COMPACT HAUNCH ZONE OF PIPE BACKFILL.

░ LOOSELY PLACED SELECT MATERIAL CLASS III OR CLASS II, TYPE 1 FOR PIPE BEDDING. LEAVE SECTION DIRECTLY BENEATH PIPE UNCOMPACTED AS PIPE SEATING AND BACKFILL WILL ACCOMPLISH COMPACTION.

DO NOT OPERATE HEAVY EQUIPMENT OVER ANY PIPE CULVERT UNTIL THE PIPE CULVERT HAS BEEN PROPERLY BACKFILLED AND COVERED WITH AT LEAST 3 FEET OF APPROVED MATERIAL.

— - — - SPRINGLINE OF PIPE

▨ SELECT BACKFILL MATERIAL CLASS III OR CLASS II, BELOW SPRINGLINE.

▤ APPROVED SUITABLE LOCAL MATERIAL ABOVE SPRINGLINE.

▥ UNDISTURBED EARTH MATERIAL

▩ SELECT MATERIAL CLASS V OR VI FOR FOUNDATION CONDITIONING. ENCAPSULATE WITH ENGINEERING FABRIC AS DIRECTED BY THE ENGINEER.

STATE OF
NORTH CAROLINA
DEPT. OF TRANSPORTATION
DIVISION OF HIGHWAYS
RALEIGH, N.C.
1-12
ENGLISH STANDARD DRAWING FOR
METHOD OF PIPE INSTALLATION
RIGID PIPE
SHEET 2 OF 3
300.01

STATE OF
NORTH CAROLINA
DEPT. OF TRANSPORTATION
DIVISION OF HIGHWAYS
RALEIGH, N.C.

1-12

ENGLISH STANDARD DRAWING FOR
PARALLEL PIPE END SECTION
PRECAST CONCRETE SECTION FOR 15" TO 24" PIPE

SHEET 1 OF 1
310.02

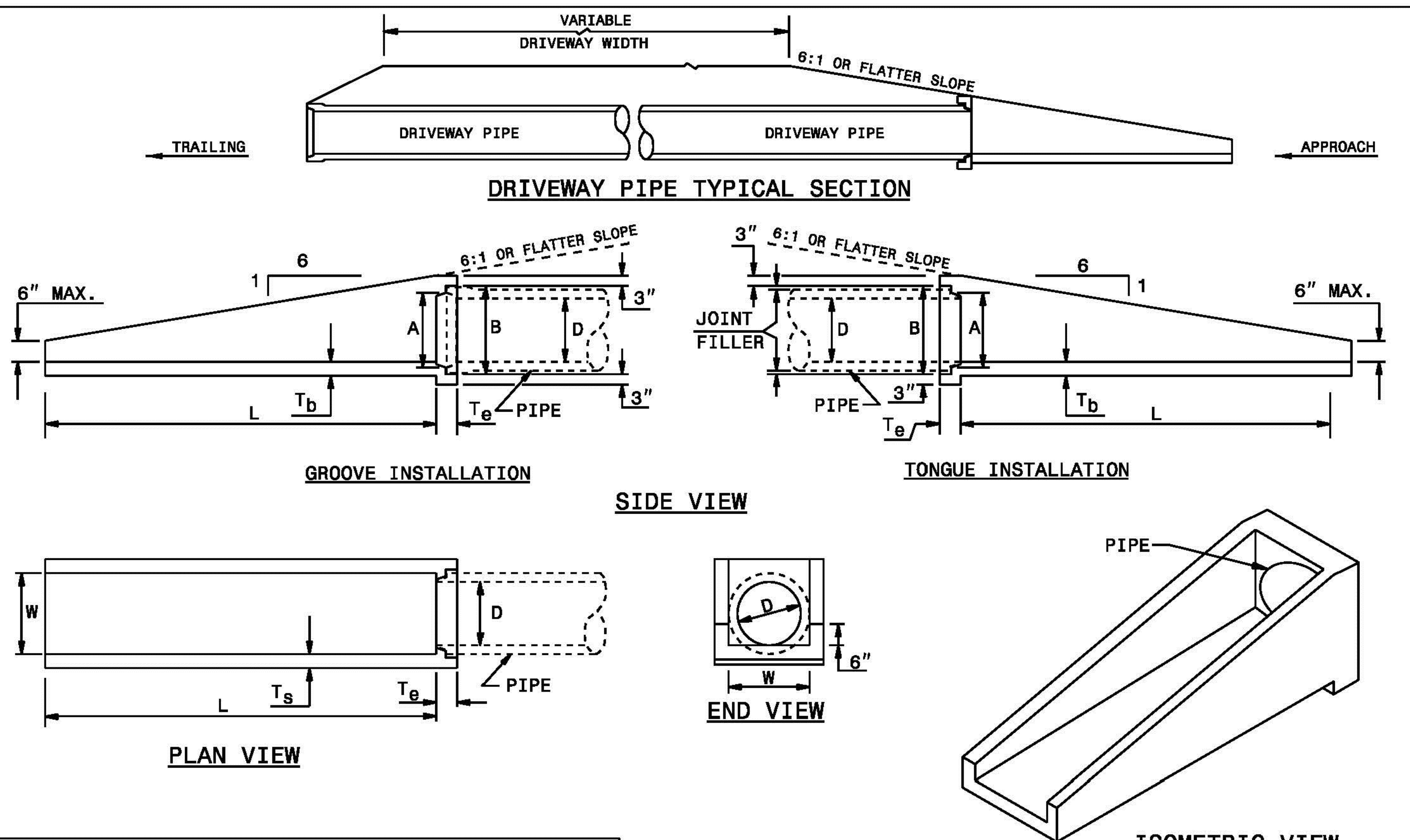
VARIABLE DRIVEWAY WIDTH
6:1 OR FLATTER SLOPE
TRAILING
DRIVEWAY PIPE
DRIVEWAY PIPE
APPROACH
DRIVEWAY PIPE TYPICAL SECTION
6" MAX.
1
6
6:1 OR FLATTER SLOPE
3"
A
B
D
L
Tb
Te
PIPE
GROOVE INSTALLATION
SIDE VIEW
JOINT FILLER
TONGUE INSTALLATION
W
Ts
PIPE
PLAN VIEW
END VIEW
6"
ISOMETRIC VIEW

END TREATMENT DIMENSIONS							
D	L	W	T_s	T_b	T_e	A	B
15"	7'-6"	19"	4"	4"	6"	17¾"	20⅞"
18"	9'-0"	23"	4"	4"	6"	21¼"	25"
24"	12'-6"	30"	4"	4"	6"	27⅞"	32"

NOTES:
1. CONSTRUCT PIPE END SECTION USING #4 REBAR SPACED 9" EACH WAY AND MEET ALL REQUIREMENTS OF STD. SPEC. 310.
2. CHAMFER ALL EXPOSED CORNERS ¾".

STATE OF
NORTH CAROLINA
DEPT. OF TRANSPORTATION
DIVISION OF HIGHWAYS
RALEIGH, N.C.
1-12
ENGLISH STANDARD DRAWING FOR
PARALLEL PIPE END SECTION
PRECAST CONCRETE SECTION FOR 15" TO 24" PIPE
SHEET 1 OF 1
310.02

(1) C-5.3 NCDOT CULVERT DETAIL
SCALE: N.T.S.

STATE OF
NORTH CAROLINA
DEPT. OF TRANSPORTATION
DIVISION OF HIGHWAYS
RALEIGH, N.C.

1-18

ROADWAY STANDARD DRAWING FOR
CONCRETE PAVEMENT JOINTS
CONSTRUCTION AND CONTRACTION JOINTS

SHEET 1 OF 2
700.01

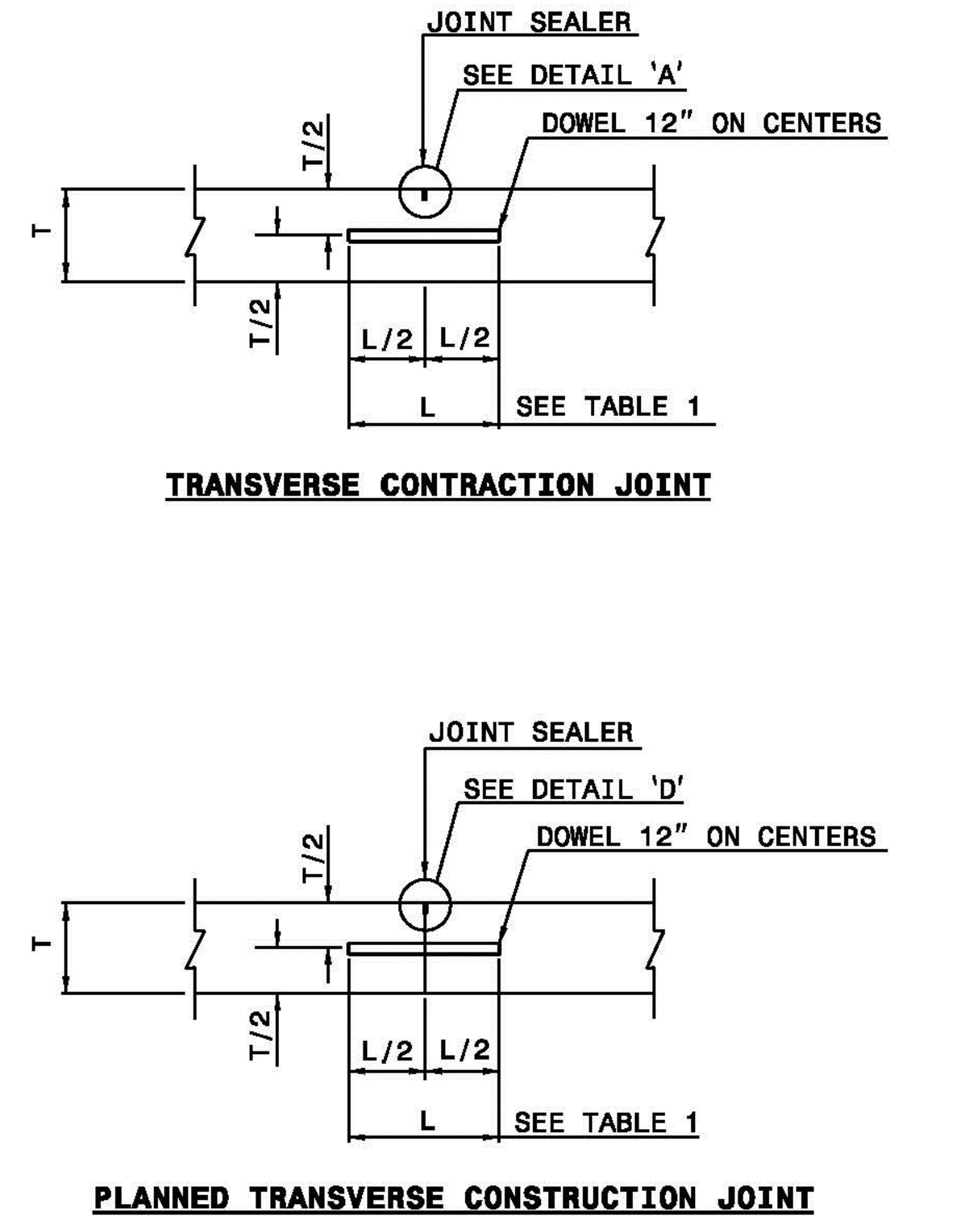
JOINT SEALER
SEE DETAIL 'A'
DOWEL 12" ON CENTERS
T/2
T
T/2
L/2
L/2
L
SEE TABLE 1
TRANSVERSE CONTRACTION JOINT
JOINT SEALER
SEE DETAIL 'D'
DOWEL 12" ON CENTERS
SEE TABLE 1
PLANNED TRANSVERSE CONSTRUCTION JOINT

GENERAL NOTES:
- FORM TRANSVERSE CONTRACTION JOINTS BY SAWING WITH APPROVED EQUIPMENT.
- SPACE TRANSVERSE CONTRACTION JOINTS AT INTERVALS OF 15'.
- USE A DOWEL ASSEMBLY OR OTHER APPROVED DOWEL INSERTION TECHNIQUE IN ALL TRANSVERSE CONTRACTION JOINTS. DOWEL ASSEMBLIES ARE COVERED IN DETAIL 700.03.
- PROVIDE SMOOTH DOWEL BARS. PROVIDE DEFORMED TIE BARS.
- WHEN UTILIZING AN EARLY ENTRY SAW, CUT THE JOINT TO A MINIMUM DEPTH OF 3".

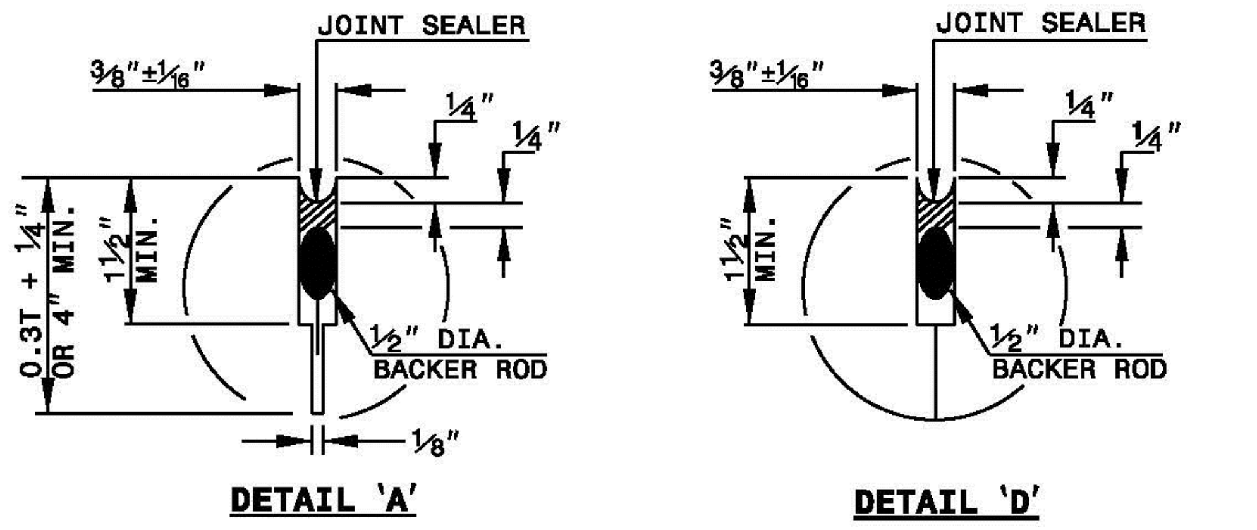
3/8"±1/16"
JOINT SEALER
¼"
¼"
0.3T + ¼" OR 4" MIN.
1½" MIN.
½" DIA. BACKER ROD
⅛"
DETAIL 'A'
3/8"±1/16"
JOINT SEALER
¼"
¼"
1½" MIN.
½" DIA. BACKER ROD
DETAIL 'D'

TABLE I - DOWEL BARS		
SLAB THICKNESS	DOWEL BAR "D"	DOWEL LENGTH "L"
8" OR LESS	1"	14"
8½" TO 9½"	1⅛"	16"
10" TO 10½"	1¼"	18"
11" AND ABOVE	1½"	18"

STATE OF
NORTH CAROLINA
DEPT. OF TRANSPORTATION
DIVISION OF HIGHWAYS
RALEIGH, N.C.

1-18

ROADWAY STANDARD DRAWING FOR
CONCRETE PAVEMENT JOINTS
CONSTRUCTION AND CONTRACTION JOINTS

SHEET 2 OF 2
700.01

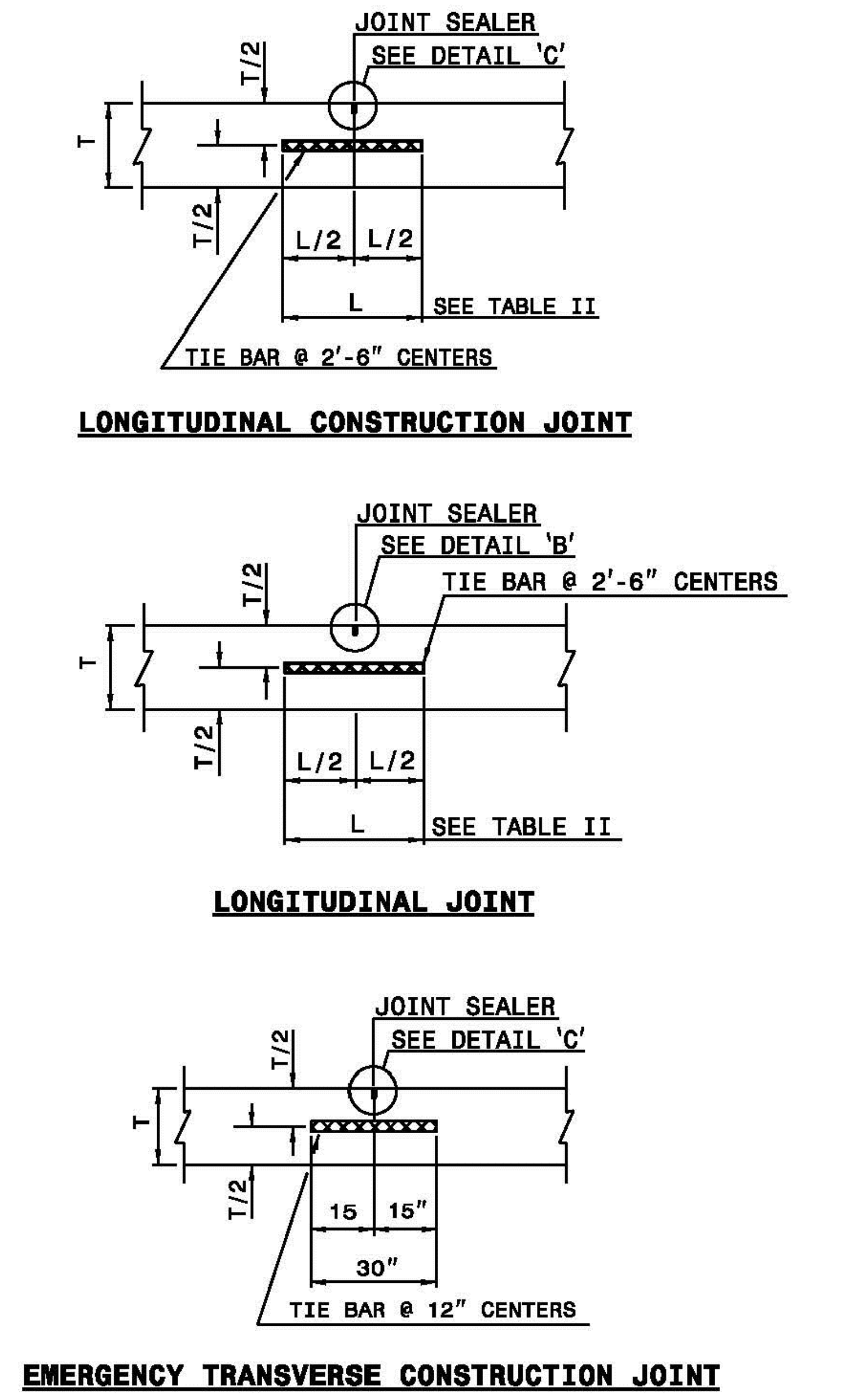
JOINT SEALER
SEE DETAIL 'C'
T/2
T
T/2
L/2
L/2
L
SEE TABLE II
TIE BAR @ 2'-6" CENTERS
LONGITUDINAL CONSTRUCTION JOINT
JOINT SEALER
SEE DETAIL 'B'
TIE BAR @ 2'-6" CENTERS
SEE TABLE II
LONGITUDINAL JOINT
JOINT SEALER
SEE DETAIL 'C'
15
15"
30"
TIE BAR @ 12" CENTERS
EMERGENCY TRANSVERSE CONSTRUCTION JOINT

GENERAL NOTES:
- CONSTRUCT TRANSVERSE CONSTRUCTION JOINTS AT THE END OF EACH DAY'S OPERATION (PLANNED JOINT) OR WHEN THE PLACING OF CONCRETE IS SUSPENDED FOR MORE THAN 30 MINUTES (EMERGENCY JOINT).
- USE AN APPROVED HEADER AT EMERGENCY JOINTS STD. DWG. 700.04 AND DESIGNED TO PERMIT THE PLACEMENT OF AND CORRECTLY HOLD IN PLACE TIE BARS.
- USE TIE BARS OF THE SAME DIAMETER AS DOWEL BARS FOR EMERGENCY TRANSVERSE CONSTRUCTION JOINTS.
- LOCATE PLANNED TRANSVERSE CONSTRUCTION JOINTS AT THE SPACING REQUIRED FOR CONTRACTION JOINTS. USE AN APPROVED METHOD OF INSTALLING DOWELS IN ALL PLANNED TRANSVERSE CONSTRUCTION JOINTS.
- DO NOT LOCATE EMERGENCY TRANSVERSE CONSTRUCTION JOINTS LESS THAN 6' FROM ANY CONTRACTION JOINT OR PLANNED CONSTRUCTION JOINT.
- DO NOT PLACE TIE BARS IN LONGITUDINAL JOINTS WITHIN 1'-4" OF A TRANSVERSE JOINT.
- WHEN UTILIZING AN EARLY ENTRY SAW, CUT THE JOINT TO A MINIMUM DEPTH OF 3".

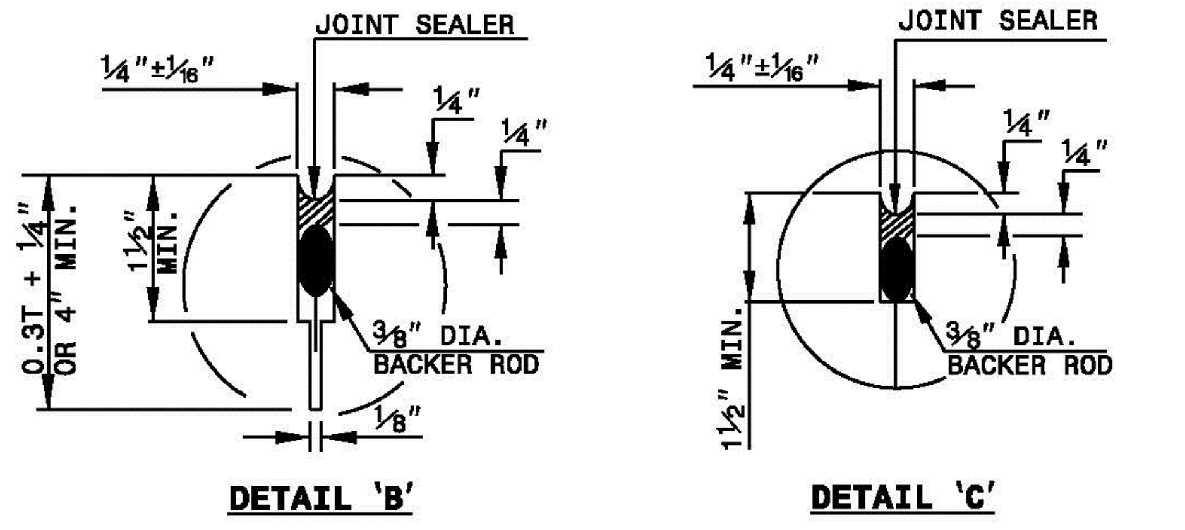
¼"±1/16"
JOINT SEALER
¼"
¼"
0.3T + ¼" OR 4" MIN.
1½" MIN.
3/8" DIA. BACKER ROD
⅛"
DETAIL 'B'
¼"±1/16"
JOINT SEALER
¼"
¼"
1½" MIN.
3/8" DIA. BACKER ROD
DETAIL 'C'

TABLE II - LONGITUDINAL TIE BARS		
SLAB THICKNESS	TIE BAR DIA. "D"	TIE BAR LENGTH "L"
8½" OR LESS	½"	30"
9" OR ABOVE	⅝"	30"

(2) C-5.3 NCDOT CONCRETE JOINT DETAILS
SCALE: N.T.S.

TC²
ENGINEERING, PLLC
201 N. Front Street
Suite M-108
Wilmington, NC 28401
910-547-5856

NO.	REVISION	DATE

SAMET HARNETT COUNTY 1

CONSTRUCTION DETAILS

ORIGINAL MAP SIZE
24" X 36"
DRAWN: BPE
CHECKED: WPC
PROJECT NO.:

SHEET:
C5.3

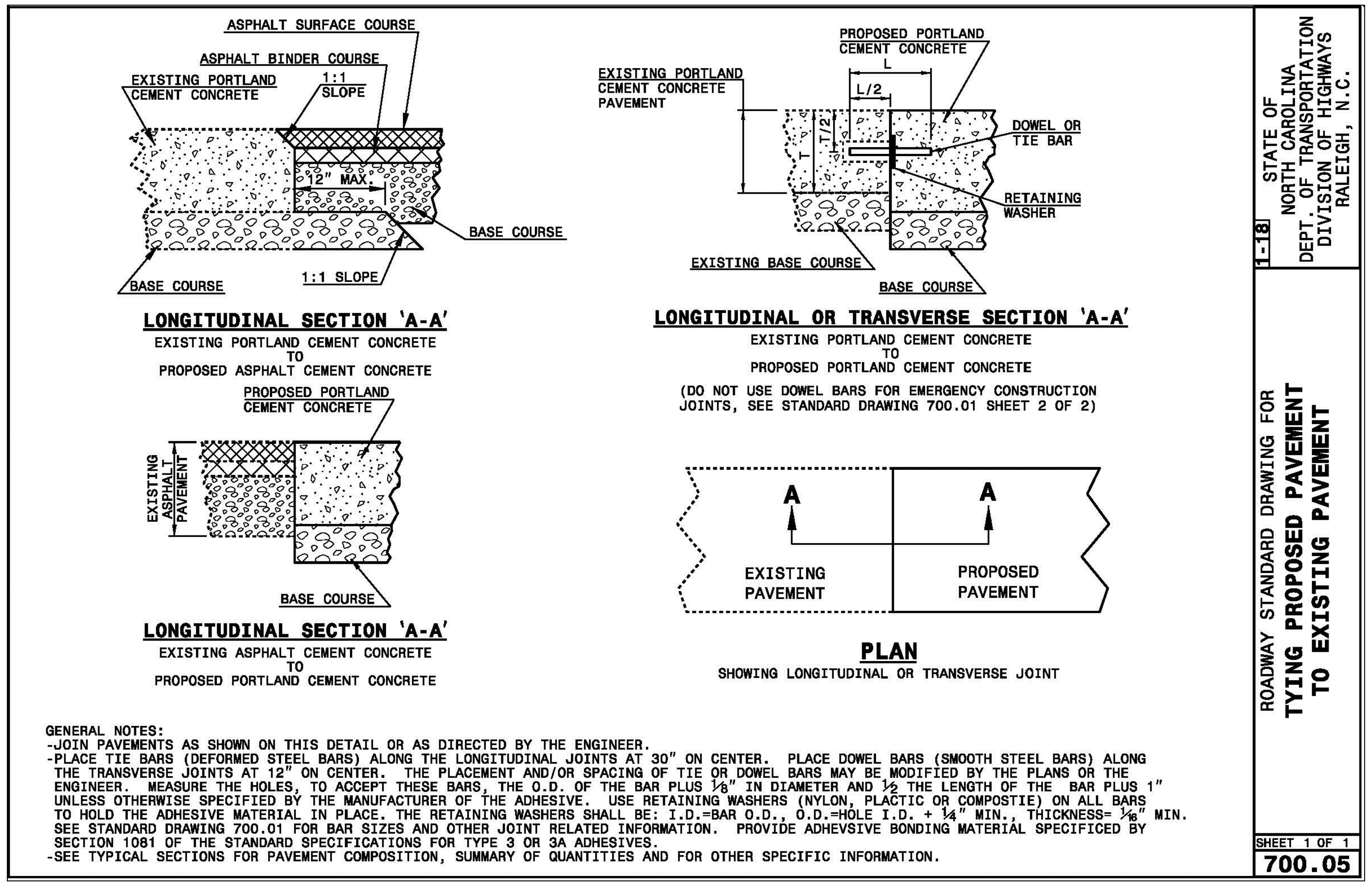
ASPHALT SURFACE COURSE
ASPHALT BINDER COURSE
EXISTING PORTLAND CEMENT CONCRETE
1:1 SLOPE
12" MAX.
BASE COURSE
BASE COURSE
1:1 SLOPE
LONGITUDINAL SECTION 'A-A'
EXISTING PORTLAND CEMENT CONCRETE TO PROPOSED ASPHALT CEMENT CONCRETE
PROPOSED PORTLAND CEMENT CONCRETE
EXISTING ASPHALT PAVEMENT
BASE COURSE
LONGITUDINAL SECTION 'A-A'
EXISTING ASPHALT CEMENT CONCRETE TO PROPOSED PORTLAND CEMENT CONCRETE
PROPOSED PORTLAND CEMENT CONCRETE
EXISTING PORTLAND CEMENT CONCRETE PAVEMENT
L
L/2
T
T/2
DOWEL OR TIE BAR
RETAINING WASHER
EXISTING BASE COURSE
BASE COURSE
LONGITUDINAL OR TRANSVERSE SECTION 'A-A'
EXISTING PORTLAND CEMENT CONCRETE TO PROPOSED PORTLAND CEMENT CONCRETE
(DO NOT USE DOWEL BARS FOR EMERGENCY CONSTRUCTION JOINTS, SEE STANDARD DRAWING 700.01 SHEET 2 OF 2)
A
A
EXISTING PAVEMENT
PROPOSED PAVEMENT
PLAN
SHOWING LONGITUDINAL OR TRANSVERSE JOINT
STATE OF NORTH CAROLINA DEPT. OF TRANSPORTATION DIVISION OF HIGHWAYS RALEIGH, N.C.
1-18
ROADWAY STANDARD DRAWING FOR
TYING PROPOSED PAVEMENT TO EXISTING PAVEMENT
SHEET 1 OF 1
700.05

GENERAL NOTES:
-JOIN PAVEMENTS AS SHOWN ON THIS DETAIL OR AS DIRECTED BY THE ENGINEER.
-PLACE TIE BARS (DEFORMED STEEL BARS) ALONG THE LONGITUDINAL JOINTS AT 30" ON CENTER. PLACE DOWEL BARS (SMOOTH STEEL BARS) ALONG THE TRANSVERSE JOINTS AT 12" ON CENTER. THE PLACEMENT AND/OR SPACING OF TIE OR DOWEL BARS MAY BE MODIFIED BY THE PLANS OR THE ENGINEER. MEASURE THE HOLES, TO ACCEPT THESE BARS, THE O.D. OF THE BAR PLUS 1/8" IN DIAMETER AND 1/2 THE LENGTH OF THE BAR PLUS 1" UNLESS OTHERWISE SPECIFIED BY THE MANUFACTURER OF THE ADHESIVE. USE RETAINING WASHERS (NYLON, PLACTIC OR COMPOSTIE) ON ALL BARS TO HOLD THE ADHESIVE MATERIAL IN PLACE. THE RETAINING WASHERS SHALL BE: I.D.=BAR O.D., O.D.=HOLE I.D. + 1/4" MIN., THICKNESS= 1/16" MIN. SEE STANDARD DRAWING 700.01 FOR BAR SIZES AND OTHER JOINT RELATED INFORMATION. PROVIDE ADHEVSIVE BONDING MATERIAL SPECIFICED BY SECTION 1081 OF THE STANDARD SPECIFICATIONS FOR TYPE 3 OR 3A ADHESIVES.
-SEE TYPICAL SECTIONS FOR PAVEMENT COMPOSITION, SUMMARY OF QUANTITIES AND FOR OTHER SPECIFIC INFORMATION.

1
C-5.4
TYING PROPOSED PAVEMENT TO EXISTING PAVEMENT
SCALE: N.T.S.

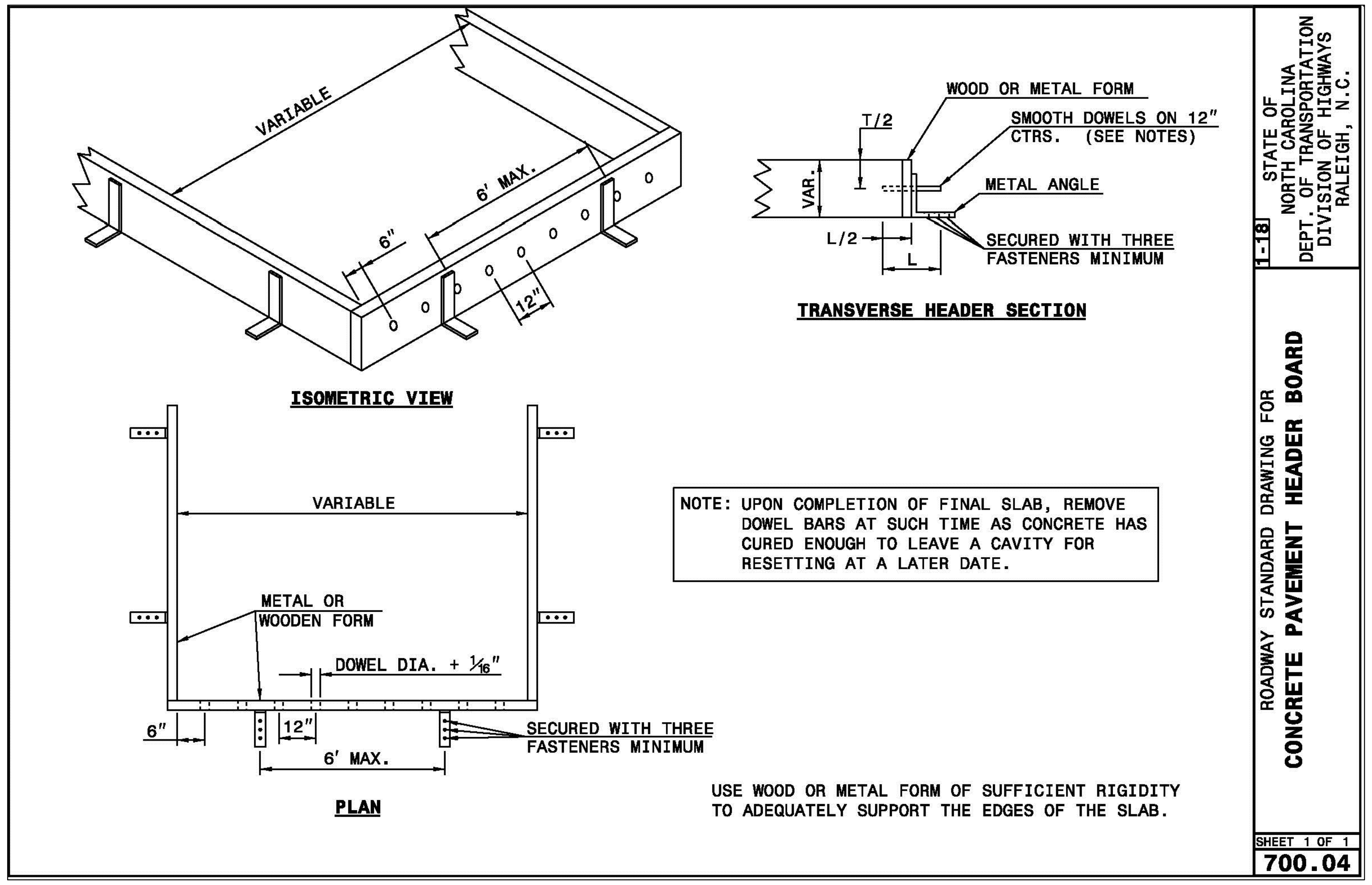
VARIABLE
6' MAX.
6"
12"
ISOMETRIC VIEW
WOOD OR METAL FORM
T/2
SMOOTH DOWELS ON 12" CTRS. (SEE NOTES)
VAR.
METAL ANGLE
L/2
L
SECURED WITH THREE FASTENERS MINIMUM
TRANSVERSE HEADER SECTION
VARIABLE
METAL OR WOODEN FORM
DOWEL DIA. + 1/8"
6"
12"
6' MAX.
SECURED WITH THREE FASTENERS MINIMUM
PLAN
STATE OF NORTH CAROLINA DEPT. OF TRANSPORTATION DIVISION OF HIGHWAYS RALEIGH, N.C.
1-18
ROADWAY STANDARD DRAWING FOR
CONCRETE PAVEMENT HEADER BOARD
SHEET 1 OF 1
700.04

NOTE: UPON COMPLETION OF FINAL SLAB, REMOVE DOWEL BARS AT SUCH TIME AS CONCRETE HAS CURED ENOUGH TO LEAVE A CAVITY FOR RESETTING AT A LATER DATE.

USE WOOD OR METAL FORM OF SUFFICIENT RIGIDITY TO ADEQUATELY SUPPORT THE EDGES OF THE SLAB.

2
C-5.4
CONCRETE FRAME/HEADER BOARD
SCALE: N.T.S.

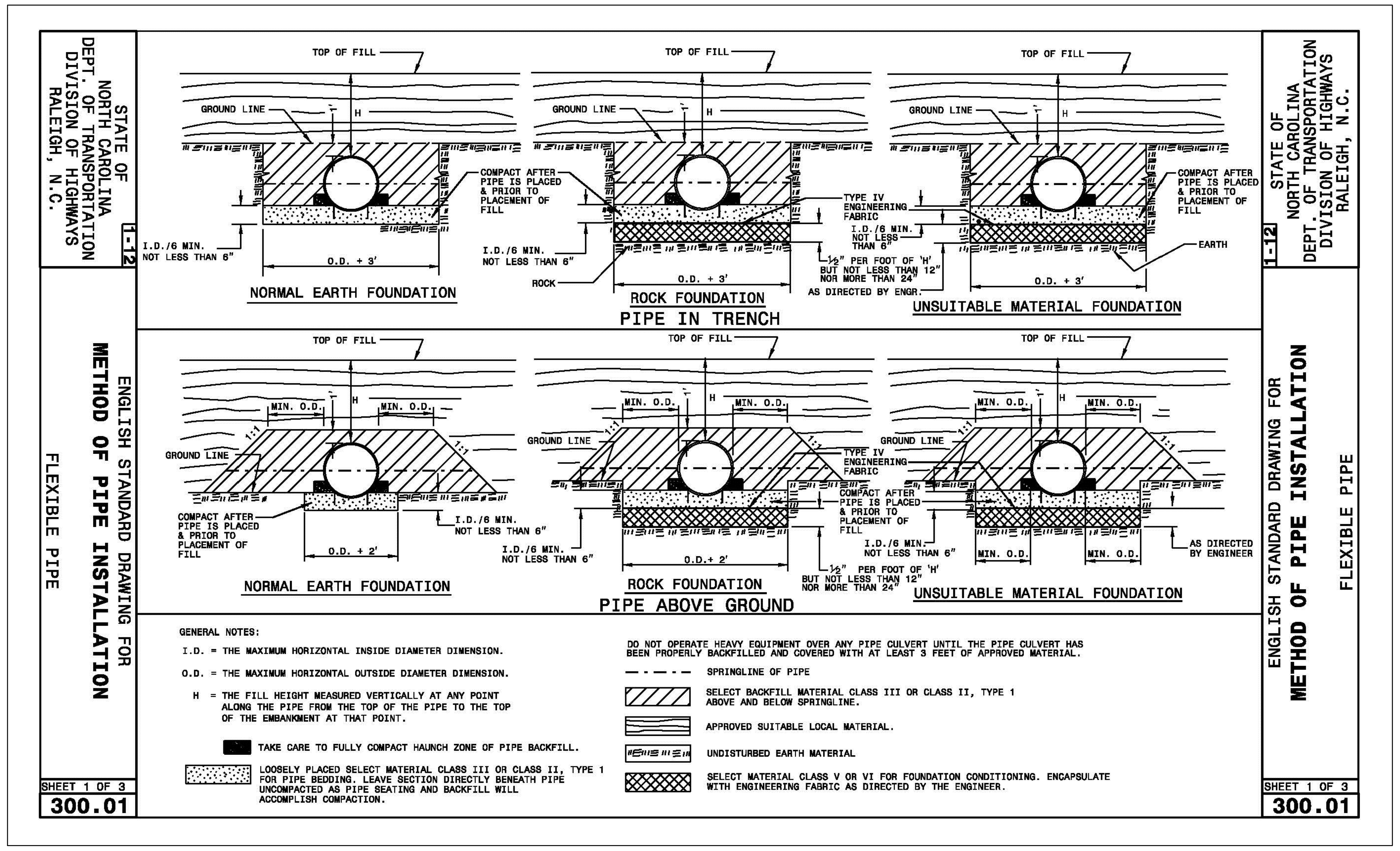
STATE OF NORTH CAROLINA DEPT. OF TRANSPORTATION DIVISION OF HIGHWAYS RALEIGH, N.C.
1-12
ENGLISH STANDARD DRAWING FOR
METHOD OF PIPE INSTALLATION
FLEXIBLE PIPE
TOP OF FILL
GROUND LINE
H
COMPACT AFTER PIPE IS PLACED & PRIOR TO PLACEMENT OF FILL
I.D./6 MIN. NOT LESS THAN 6"
O.D. + 3'
NORMAL EARTH FOUNDATION
TYPE IV ENGINEERING FABRIC
I.D./6 MIN. NOT LESS THAN 6"
ROCK
1/2" PER FOOT OF 'H' BUT NOT LESS THAN 12" NOR MORE THAN 24"
ROCK FOUNDATION
PIPE IN TRENCH
AS DIRECTED BY ENGR.
EARTH
UNSUITABLE MATERIAL FOUNDATION
MIN. O.D.
O.D. + 2'
NORMAL EARTH FOUNDATION
ROCK FOUNDATION
PIPE ABOVE GROUND
AS DIRECTED BY ENGINEER
UNSUITABLE MATERIAL FOUNDATION
SHEET 1 OF 3
300.01

GENERAL NOTES:

I.D. = THE MAXIMUM HORIZONTAL INSIDE DIAMETER DIMENSION.

O.D. = THE MAXIMUM HORIZONTAL OUTSIDE DIAMETER DIMENSION.

H = THE FILL HEIGHT MEASURED VERTICALLY AT ANY POINT ALONG THE PIPE FROM THE TOP OF THE PIPE TO THE TOP OF THE EMBANKMENT AT THAT POINT.

■ TAKE CARE TO FULLY COMPACT HAUNCH ZONE OF PIPE BACKFILL.

░ LOOSELY PLACED SELECT MATERIAL CLASS III OR CLASS II, TYPE 1 FOR PIPE BEDDING. LEAVE SECTION DIRECTLY BENEATH PIPE UNCOMPACTED AS PIPE SEATING AND BACKFILL WILL ACCOMPLISH COMPACTION.

DO NOT OPERATE HEAVY EQUIPMENT OVER ANY PIPE CULVERT UNTIL THE PIPE CULVERT HAS BEEN PROPERLY BACKFILLED AND COVERED WITH AT LEAST 3 FEET OF APPROVED MATERIAL.

— - — - - SPRINGLINE OF PIPE

▨ SELECT BACKFILL MATERIAL CLASS III OR CLASS II, TYPE 1 ABOVE AND BELOW SPRINGLINE.

☰ APPROVED SUITABLE LOCAL MATERIAL.

▤ UNDISTURBED EARTH MATERIAL

▩ SELECT MATERIAL CLASS V OR VI FOR FOUNDATION CONDITIONING. ENCAPSULATE WITH ENGINEERING FABRIC AS DIRECTED BY THE ENGINEER.

3
C-5.4
PIPE INSTALLATION-FLEXIBLE PIPE
SCALE: N.T.S.

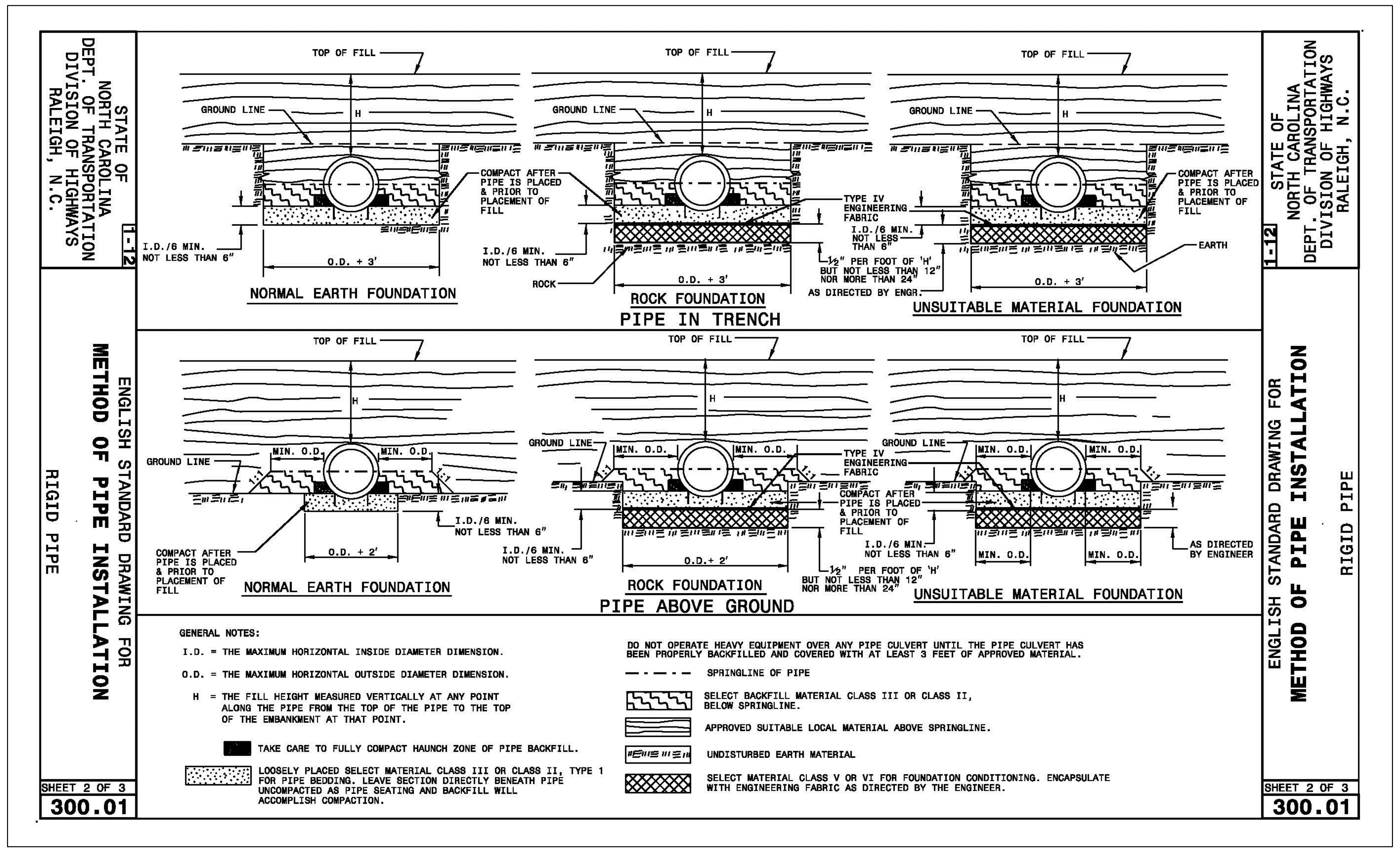
STATE OF NORTH CAROLINA DEPT. OF TRANSPORTATION DIVISION OF HIGHWAYS RALEIGH, N.C.
1-12
ENGLISH STANDARD DRAWING FOR
METHOD OF PIPE INSTALLATION
RIGID PIPE
TOP OF FILL
GROUND LINE
H
COMPACT AFTER PIPE IS PLACED & PRIOR TO PLACEMENT OF FILL
I.D./6 MIN. NOT LESS THAN 6"
O.D. + 3'
NORMAL EARTH FOUNDATION
TYPE IV ENGINEERING FABRIC
ROCK
1/2" PER FOOT OF 'H' BUT NOT LESS THAN 12" NOR MORE THAN 24"
ROCK FOUNDATION
PIPE IN TRENCH
AS DIRECTED BY ENGR.
EARTH
UNSUITABLE MATERIAL FOUNDATION
MIN. O.D.
O.D. + 2'
NORMAL EARTH FOUNDATION
ROCK FOUNDATION
PIPE ABOVE GROUND
AS DIRECTED BY ENGINEER
UNSUITABLE MATERIAL FOUNDATION
SHEET 2 OF 3
300.01

GENERAL NOTES:

I.D. = THE MAXIMUM HORIZONTAL INSIDE DIAMETER DIMENSION.

O.D. = THE MAXIMUM HORIZONTAL OUTSIDE DIAMETER DIMENSION.

H = THE FILL HEIGHT MEASURED VERTICALLY AT ANY POINT ALONG THE PIPE FROM THE TOP OF THE PIPE TO THE TOP OF THE EMBANKMENT AT THAT POINT.

■ TAKE CARE TO FULLY COMPACT HAUNCH ZONE OF PIPE BACKFILL.

░ LOOSELY PLACED SELECT MATERIAL CLASS III OR CLASS II, TYPE 1 FOR PIPE BEDDING. LEAVE SECTION DIRECTLY BENEATH PIPE UNCOMPACTED AS PIPE SEATING AND BACKFILL WILL ACCOMPLISH COMPACTION.

DO NOT OPERATE HEAVY EQUIPMENT OVER ANY PIPE CULVERT UNTIL THE PIPE CULVERT HAS BEEN PROPERLY BACKFILLED AND COVERED WITH AT LEAST 3 FEET OF APPROVED MATERIAL.

— - — - - SPRINGLINE OF PIPE

▨ SELECT BACKFILL MATERIAL CLASS III OR CLASS II, BELOW SPRINGLINE.

☰ APPROVED SUITABLE LOCAL MATERIAL ABOVE SPRINGLINE.

▤ UNDISTURBED EARTH MATERIAL

▩ SELECT MATERIAL CLASS V OR VI FOR FOUNDATION CONDITIONING. ENCAPSULATE WITH ENGINEERING FABRIC AS DIRECTED BY THE ENGINEER.

4
C-5.4
PIPE INSTALLATION-RIGID PIPE
SCALE: N.T.S.

TC²
ENGINEERING, PLLC
201 N. Front Street
Suite M-108
Wilmington, NC 28401
910-547-5856

NO.	REVISION	DATE

SAMET HARNETT COUNTY 1

CONSTRUCTION DETAILS

ORIGINAL MAP SIZE
24" X 36"
DRAWN: BPE
CHECKED: WPC
PROJECT NO.:

SHEET:
C5.4

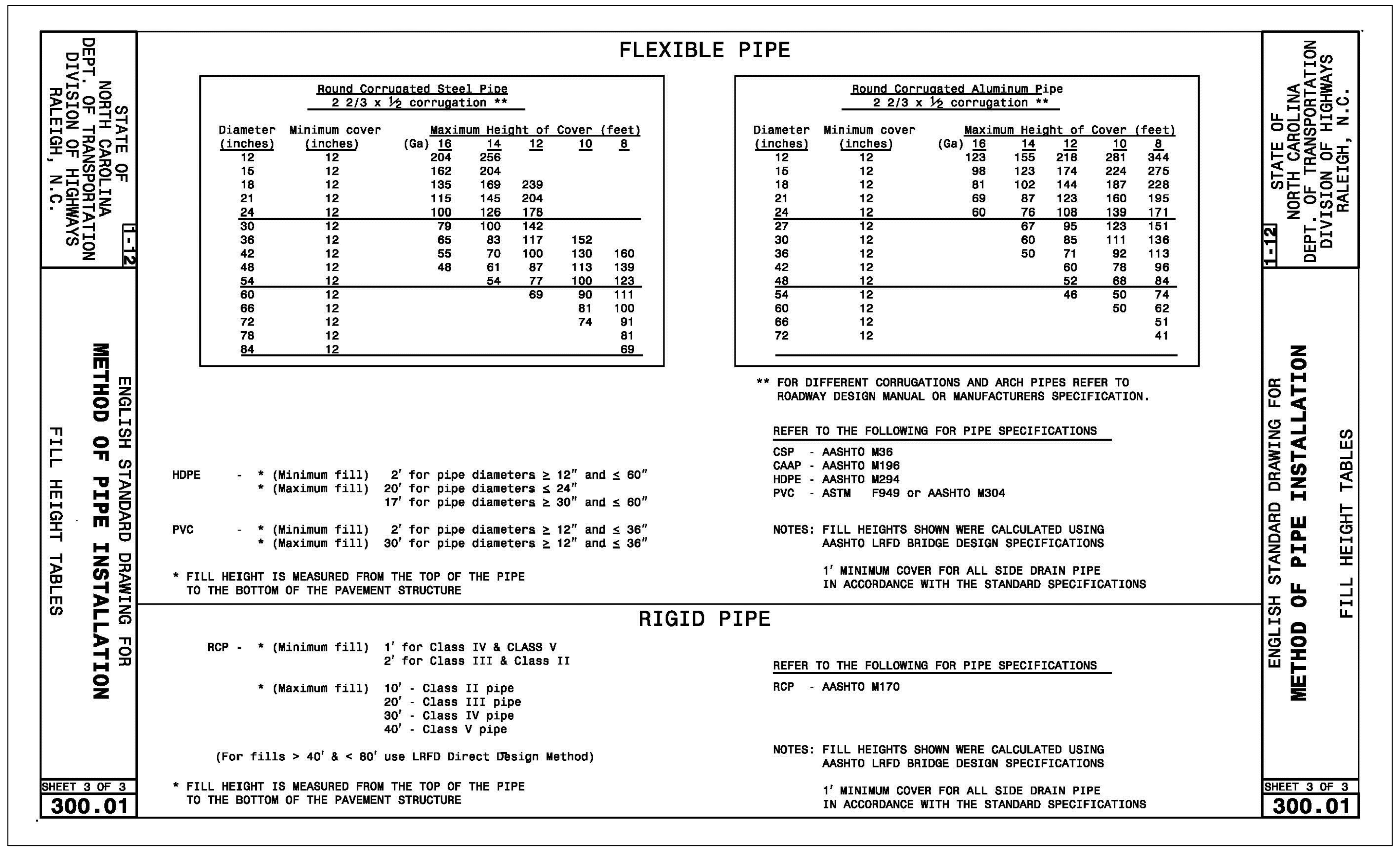

STATE OF
NORTH CAROLINA
DEPT. OF TRANSPORTATION
DIVISION OF HIGHWAYS
RALEIGH, N.C.

1-12

ENGLISH STANDARD DRAWING FOR
METHOD OF PIPE INSTALLATION

FILL HEIGHT TABLES

SHEET 3 OF 3
300.01

FLEXIBLE PIPE

Round Corrugated Steel Pipe
2 2/3 x ½ corrugation **

Diameter (inches)	Minimum cover (inches)	Maximum Height of Cover (feet) (Ga) 16	14	12	10	8
12	12	204	256			
15	12	162	204			
18	12	135	169	239		
21	12	115	145	204		
24	12	100	126	178		
30	12	79	100	142		
36	12	65	83	117	152	
42	12	55	70	100	130	160
48	12	48	61	87	113	139
54	12		54	77	100	123
60	12			69	90	111
66	12				81	100
72	12				74	91
78	12					81
84	12					69

Round Corrugated Aluminum Pipe
2 2/3 x ½ corrugation **

Diameter (inches)	Minimum cover (inches)	Maximum Height of Cover (feet) (Ga) 16	14	12	10	8
12	12	123	155	218	281	344
15	12	98	123	174	224	275
18	12	81	102	144	187	228
21	12	69	87	123	160	195
24	12	60	76	108	139	171
27	12		67	95	123	151
30	12		60	85	111	136
36	12		50	71	92	113
42	12			60	78	96
48	12			52	68	84
54	12			46	50	74
60	12				50	62
66	12					51
72	12					41

** FOR DIFFERENT CORRUGATIONS AND ARCH PIPES REFER TO ROADWAY DESIGN MANUAL OR MANUFACTURERS SPECIFICATION.

HDPE - * (Minimum fill) 2′ for pipe diameters ≥ 12″ and ≤ 60″
* (Maximum fill) 20′ for pipe diameters ≤ 24″
17′ for pipe diameters ≥ 30″ and ≤ 60″

PVC - * (Minimum fill) 2′ for pipe diameters ≥ 12″ and ≤ 36″
* (Maximum fill) 30′ for pipe diameters ≥ 12″ and ≤ 36″

* FILL HEIGHT IS MEASURED FROM THE TOP OF THE PIPE TO THE BOTTOM OF THE PAVEMENT STRUCTURE

REFER TO THE FOLLOWING FOR PIPE SPECIFICATIONS

CSP - AASHTO M36
CAAP - AASHTO M196
HDPE - AASHTO M294
PVC - ASTM F949 or AASHTO M304

NOTES: FILL HEIGHTS SHOWN WERE CALCULATED USING AASHTO LRFD BRIDGE DESIGN SPECIFICATIONS

1′ MINIMUM COVER FOR ALL SIDE DRAIN PIPE IN ACCORDANCE WITH THE STANDARD SPECIFICATIONS

RIGID PIPE

RCP - * (Minimum fill) 1′ for Class IV & CLASS V
2′ for Class III & Class II

* (Maximum fill) 10′ - Class II pipe
20′ - Class III pipe
30′ - Class IV pipe
40′ - Class V pipe

(For fills > 40′ & < 80′ use LRFD Direct Design Method)

* FILL HEIGHT IS MEASURED FROM THE TOP OF THE PIPE TO THE BOTTOM OF THE PAVEMENT STRUCTURE

REFER TO THE FOLLOWING FOR PIPE SPECIFICATIONS

RCP - AASHTO M170

NOTES: FILL HEIGHTS SHOWN WERE CALCULATED USING AASHTO LRFD BRIDGE DESIGN SPECIFICATIONS

1′ MINIMUM COVER FOR ALL SIDE DRAIN PIPE IN ACCORDANCE WITH THE STANDARD SPECIFICATIONS

STATE OF
NORTH CAROLINA
DEPT. OF TRANSPORTATION
DIVISION OF HIGHWAYS
RALEIGH, N.C.

1-12

ENGLISH STANDARD DRAWING FOR
METHOD OF PIPE INSTALLATION

FILL HEIGHT TABLES

SHEET 3 OF 3
300.01

1
C-5.5
PIPE FILL HEIGHT
SCALE: N.T.S.

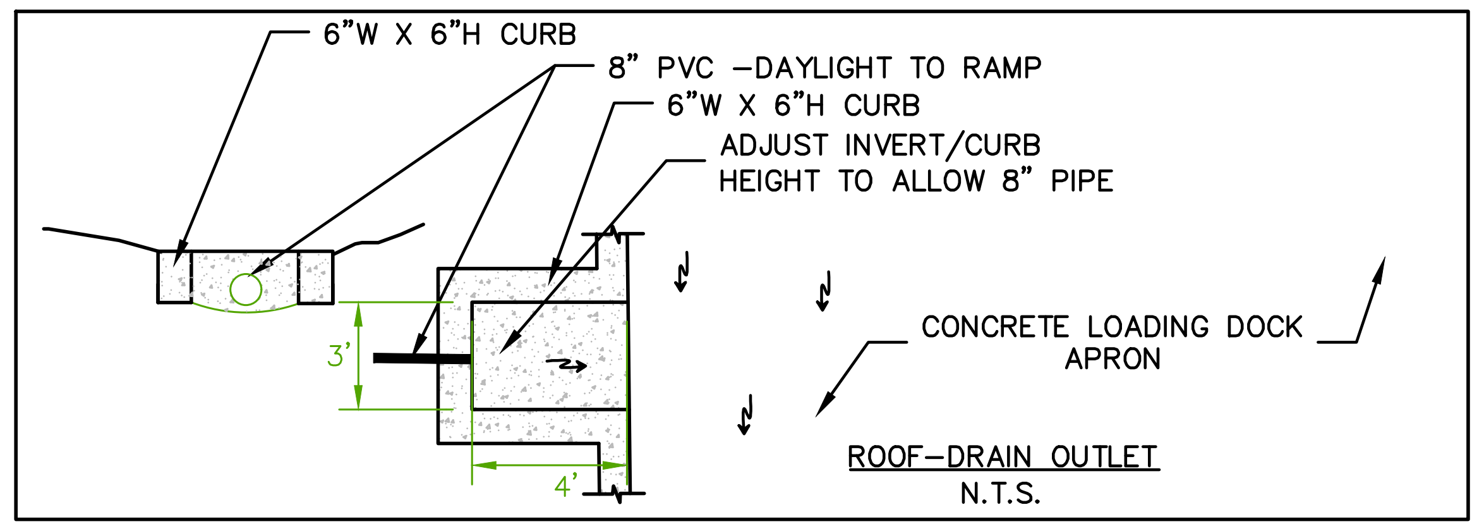

2
C-5.5
CONCRETE FLUME FOR ROOF DRAIN
SCALE: 1"=10'

TC^2
ENGINEERING, PLLC
201 N. Front Street
Suite M-108
Wilmington, NC 28401
910-547-5856

NO.	REVISION	DATE

SAMET HARNETT COUNTY 1

CONSTRUCTION DETAILS

ORIGINAL MAP SIZE
24" X 36"
DRAWN: BPE
CHECKED: WPC
PROJECT NO.:

SHEET:
C5.5

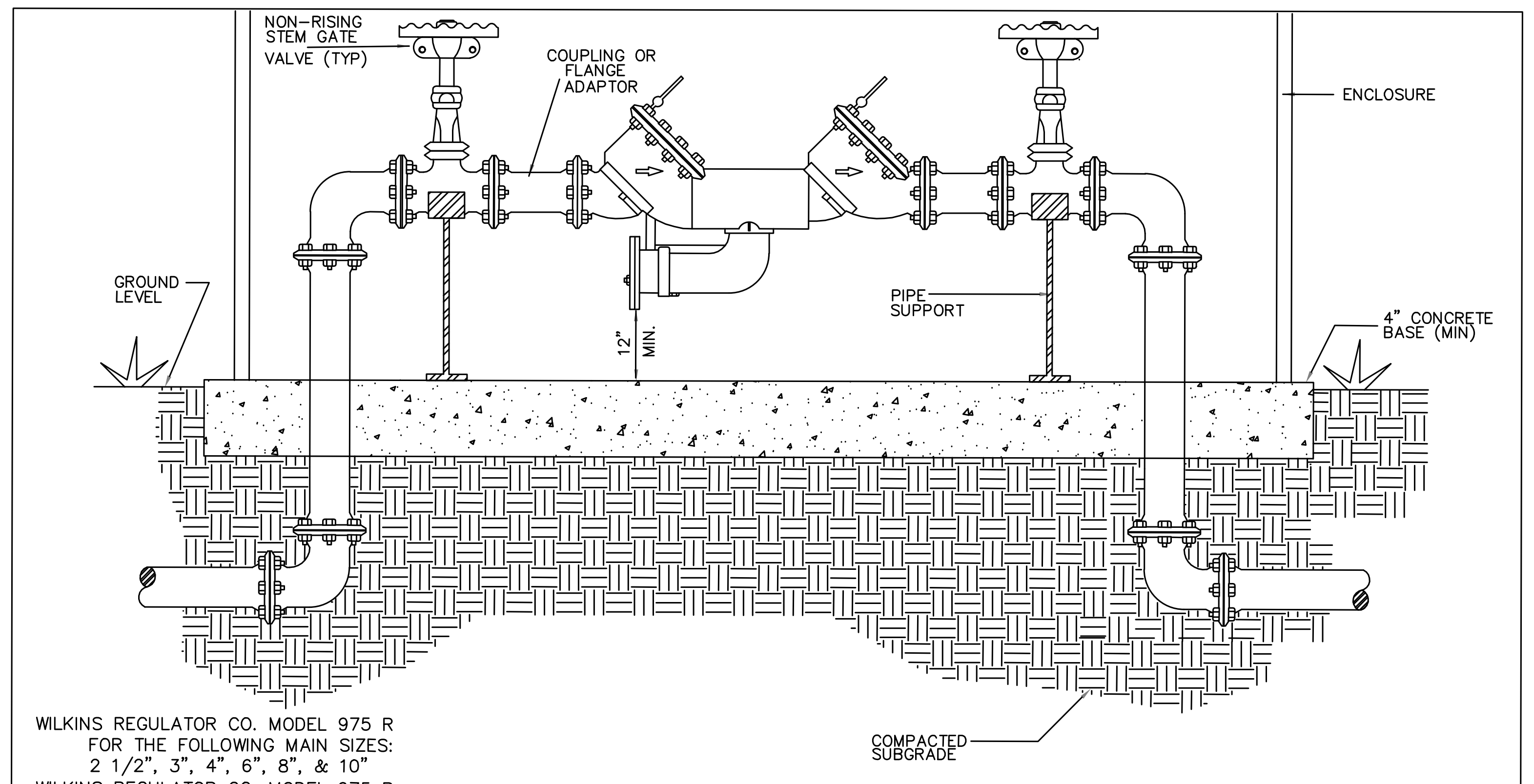
NON-RISING STEM GATE VALVE (TYP)
COUPLING OR FLANGE ADAPTOR
ENCLOSURE
GROUND LEVEL
PIPE SUPPORT
12" MIN.
4" CONCRETE BASE (MIN)
COMPACTED SUBGRADE

WILKINS REGULATOR CO. MODEL 975 R
FOR THE FOLLOWING MAIN SIZES:
2 1/2", 3", 4", 6", 8", & 10"
WILKINS REGULATOR CO. MODEL 975 B
FOR THE FOLLOWING MAIN SIZES:
3/4", 1", 1 1/4", 1 1/2", & 2"
WILKINS REGULATOR CO. MODEL 575 R
FOR THE FOLLOWING MAIN SIZES:
2 1/2", 3", 4", 6", M8", & M10"
WILKINS REGULATOR CO. MODEL 975 AB
FOR THE FOLLOWING MAIN SIZES:
3/4", 1", 1 1/4", 1 1/2", & 2"

NOTES:
1. SEE CROSS CONNECTION NOTES FOR ADDITIONAL INFORMATION.
2. ASSEMBLY SHALL BE HOUSED IN AN ALUMINUM INSULATED ENCLOSURE.
3. ALL PIPING SHALL BE STEEL OR DUCTILE IRON

north carolina
DUNN
city of dunn

REDUCED PRESSURE PRINCIPLE ASSEMBLY

ABOVE GROUND INSTALLATION ONLY

CITY of DUNN
NORTH CAROLINA
Department of Public Works

Revised: 1/28/11
Scale: NTS
600.13
Sheet 1 of 1

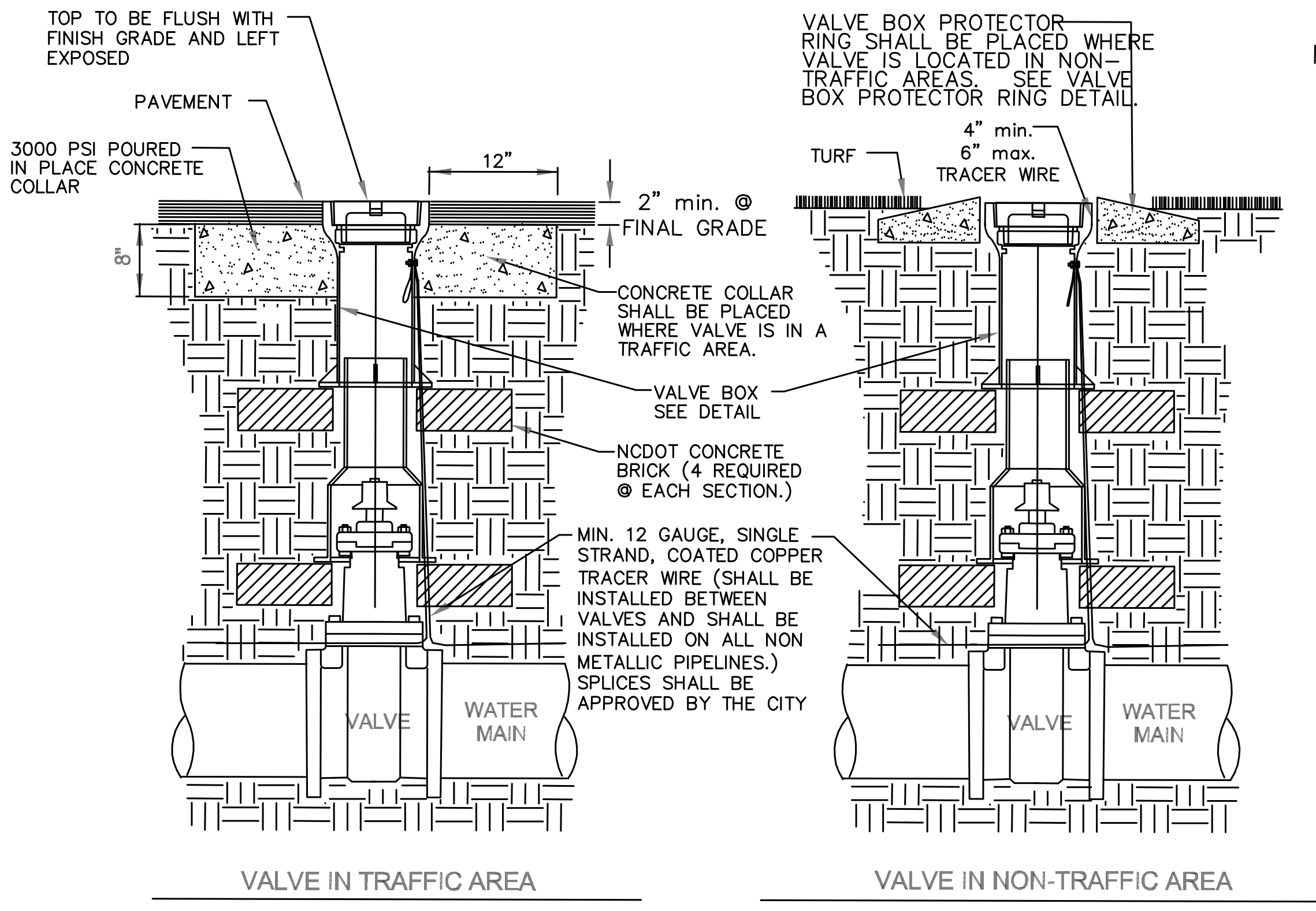
TOP TO BE FLUSH WITH FINISH GRADE AND LEFT EXPOSED
PAVEMENT
3000 PSI POURED IN PLACE CONCRETE COLLAR
12"
8"
2" min. @ FINAL GRADE
CONCRETE COLLAR SHALL BE PLACED WHERE VALVE IS IN A TRAFFIC AREA.
VALVE BOX SEE DETAIL
NCDOT CONCRETE BRICK (4 REQUIRED @ EACH SECTION.)
MIN. 12 GAUGE, SINGLE STRAND, COATED COPPER TRACER WIRE (SHALL BE INSTALLED BETWEEN VALVES AND SHALL BE INSTALLED ON ALL NON METALLIC PIPELINES.) SPLICES SHALL BE APPROVED BY THE CITY
VALVE BOX PROTECTOR RING SHALL BE PLACED WHERE VALVE IS LOCATED IN NON-TRAFFIC AREAS. SEE VALVE BOX PROTECTOR RING DETAIL.
TURF
4" min. 6" max.
TRACER WIRE
VALVE
WATER MAIN
VALVE
WATER MAIN
VALVE IN TRAFFIC AREA
VALVE IN NON-TRAFFIC AREA

NOTES:
1. ALL MATERIALS SHALL BE IN ACCORDANCE WITH CITY STANDARDS.
2. RESILIENT WEDGE GATE VALVE SHALL BE AS MANUFACTURED BY MUELLER CORP., AMERICAN DARLING OR CLOW CORP.
3. ALL VALVES SHALL HAVE 2" SQUARE OPERATING NUT AND SHALL OPEN COUNTERCLOCKWISE.
4. VALVE BODY, BONNET AND GATE SHALL BE IN ACCORDANCE WITH AWWA C-509/C-515 AND NSF61.
5. VALVE BODY AND BONNET SHALL BE COATED ON ALL INTERIOR AND EXTERIOR SURFACES WITH A FUSION BONDED EPOXY IN ACCORDANCE WITH AWWA C-550-90.
6. ALL VALVES 24" AND SMALLER SHALL HAVE A SAFE WORKING PRESSURE OF 250 PSI.
7. SEE VALVE BOX DETAIL FOR ADDITIONAL INFORMATION.
8. SEE VALVE BOX PROTECTOR RING DETAIL FOR ADDITIONAL INFORMATION.
9. VALVE BOX SECTIONS ARE REQUIRED. THE USE OF PIPE IN LIEU OF VALVE BOX SECTIONS SHALL NOT BE PERMITTED.

north carolina
DUNN
city of dunn

GATE VALVE

CITY of DUNN
NORTH CAROLINA
Department of Public Works

Revised: 1/28/11
Scale: NTS
600.09
Sheet 1 of 1

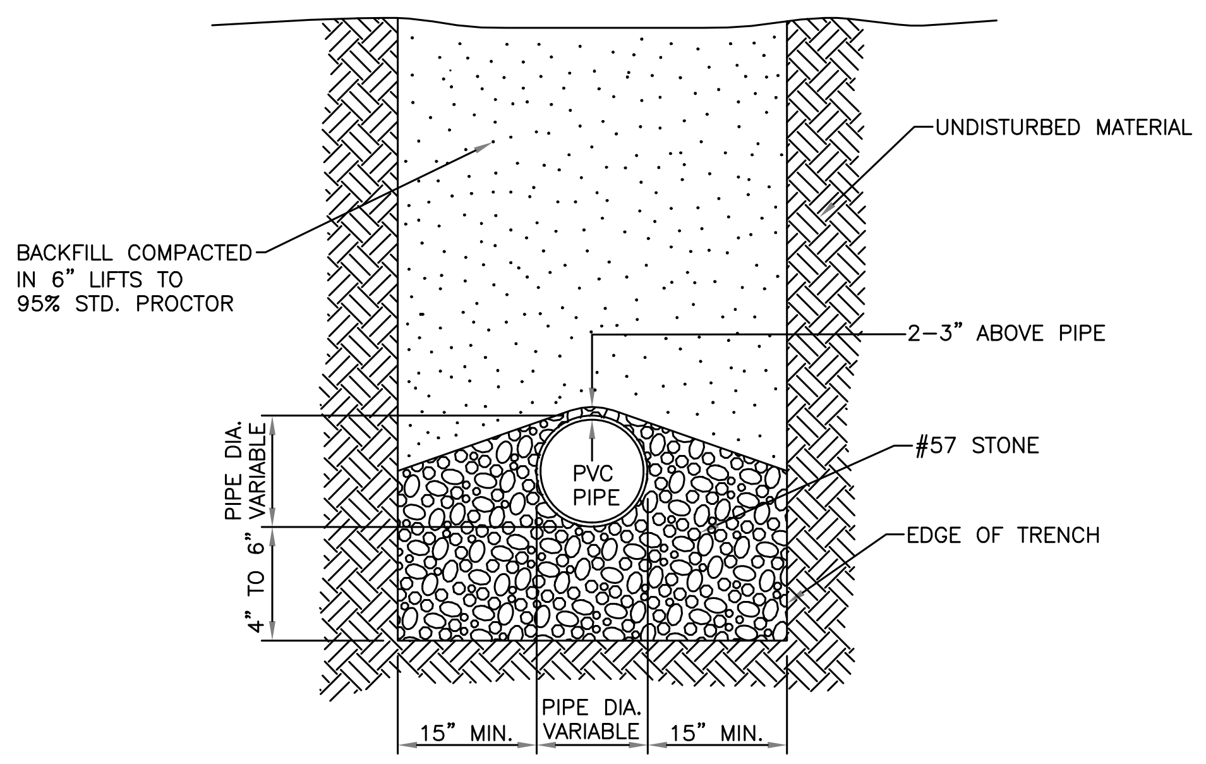
UNDISTURBED MATERIAL
BACKFILL COMPACTED IN 6" LIFTS TO 95% STD. PROCTOR
2-3" ABOVE PIPE
PVC PIPE
#57 STONE
EDGE OF TRENCH
PIPE DIA. VARIABLE
4" TO 6"
15" MIN.
PIPE DIA. VARIABLE
15" MIN.

north carolina
DUNN
city of dunn

PVC PIPE BACKFILL

CITY of DUNN
NORTH CAROLINA
Department of Public Works

Revised: 1/28/11
Scale: NTS
700.13
Sheet 1 of 1

REQUIREMENTS FOR ABOVE GROUND INSTALLATIONS OF REDUCED PRESSURE PRINCIPLE AND DOUBLE CHECK VALVE ASSEMBLIES

1. THE BACKFLOW PREVENTOR MUST BE INSTALLED A MINIMUM DISTANCE OF 5 (5) FEET FROM THE METER SERVICE. INSTALLATION OF BACKFLOW PREVENTORS WITHIN THE RIGHT-OF-WAY WILL NOT BE APPROVED.
2. REDUCED PRESSURE PRINCIPLE ASSEMBLIES MUST BE INSTALLED IN A HORIZONTAL POSITION AND IN A LOCATION IN WHICH NO PORTION OF THE ASSEMBLY CAN BE SUBMERGED UNDER ANY CIRCUMSTANCES.
3. DOUBLE CHECK VALVE ASSEMBLIES MAY BE INSTALLED IN A VERTICAL POSITION PROVIDED IT CANNOT BE INSTALLED HORIZONTALLY AND THE FLOW OF WATER IS IN AN UPWARDS DIRECTION.
4. REDUCE PRESSURE PRINCIPLE BACKFLOW PREVENTORS MUST BE INSTALLED ABOVE GROUND.

   BACKFLOW PREVENTION ASSEMBLIES TWO AND ON-HALF (2 1/2) INCHES OR LARGER SHALL BE INSTALLED WITH DUCTILE IRON OR STEEL PIPE.
5. BACKFLOW PREVENTORS INSTALLED INSIDE MUST BE A MINIMUM DISTANCE OF TWELVE (12) INCHES ABOVE THE FLOOR, AND NO HIGHER THAN 4 (4) FEET ABOVE THE FLOOR, WITH ADEQUATE CLEARANCE AROUND THE BACKFLOW PREVENTOR FOR TESTING, AND/OR REPAIR. WHEREVER A REDUCED PRESSURE PRINCIPLE BACKFLOW PREVENTOR IS INSTALLED INSIDE A BUILDING, AN AIR GAP DRAIN LARGE ENOUGH TO CARRY OFF THE DISCHARGE OF WATER FROM THE RELIEF VALVE SHALL BE INSTALLED.
6. BACKFLOW PREVENTION ASSEMBLIES INSTALLED OUTSIDE, ABOVE GROUND MUST BE PROTECTED FROM FREEZING. THE BACKFLOW PREVENTION ASSEMBLY MUST BE INSTALLED A MINIMUM DISTANCE OF TWELVE (12) INCHES ABOVE GROUND, AND NO HIGHER THAN FOUR (4) FEET ABOVE GROUND. LANDSCAPING IS ALLOWED AROUND THE BACKFLOW PREVENTOR, BUT MUST NOT INTERFERE WITH THE REQUIRED ANNUAL TESTING AND/OR REPAIR.
7. SHOULD YOU HAVE ANY QUESTIONS CONCERNING THE REQUIREMENTS LISTED ABOVE CONTACT PUBLIC WORKS CROSS CONNECTION COORDINATOR, AT (910)890-5709, TO ASSIST YOU TO INSURE PROPER INSTALLATION.

north carolina
DUNN
city of dunn

BACKFLOW PREVENTION NOTES

CITY of DUNN
NORTH CAROLINA
Department of Public Works

Revised: 1/28/11
Scale: NTS
600.12
Sheet 1 of 1

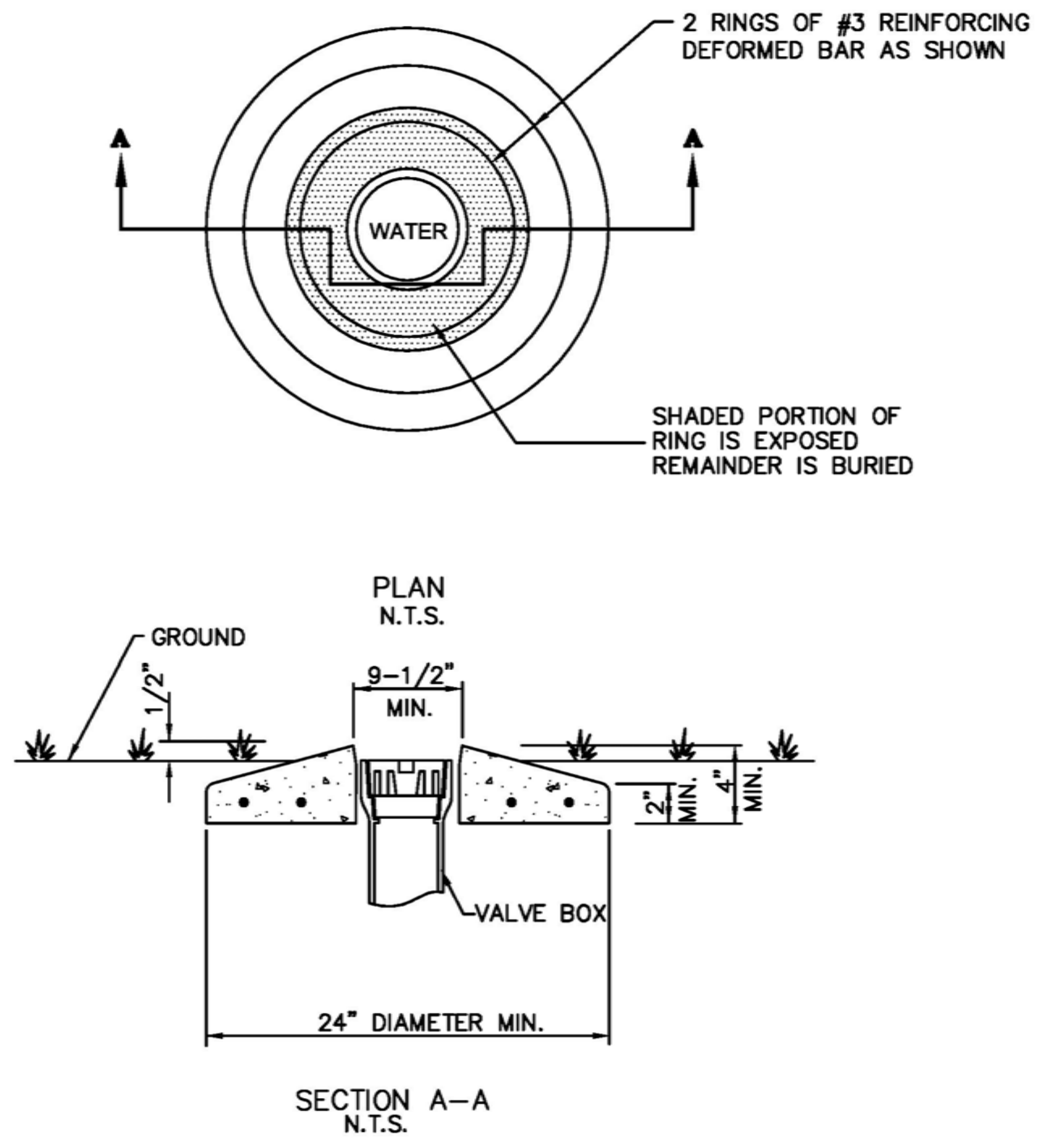
2 RINGS OF #3 REINFORCING DEFORMED BAR AS SHOWN
A
A
WATER
SHADED PORTION OF RING IS EXPOSED REMAINDER IS BURIED
PLAN
N.T.S.
GROUND
1/2"
9-1/2" MIN.
2" MIN.
4" MIN.
VALVE BOX
24" DIAMETER MIN.
SECTION A-A
N.T.S.

NOTES:
1. CONCRETE PROTECTOR RING SHALL BE 2500 P.S.I. PRECAST REINFORCED CONCRETE
2. VALVE BOX SHALL BE AT GRADE W/PROTECTOR RING EXTENDING 1/2" ABOVE GRADE
3. SEE GATE VALVE AND BOX DETAIL
4. VALVE BOX PROTECTOR RINGS SHALL BE INSTALLED AROUND VALVE BOX IN UNPAVED NON-TRAFFIC AREAS. AND SHALL NOT CREATE A HINDERANCE TO MOWING OPERATIONS.

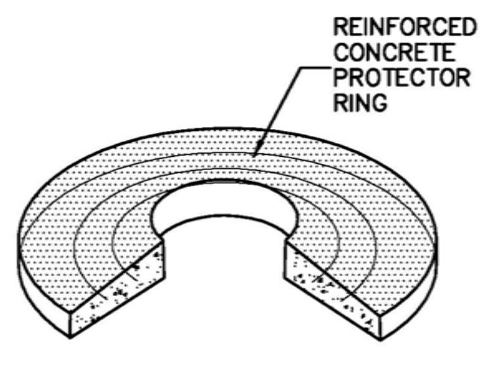
REINFORCED CONCRETE PROTECTOR RING

CUT AWAY VIEW

north carolina
DUNN
city of dunn

VALVE BOX PROTECTOR RING

CITY of DUNN
NORTH CAROLINA
Department of Public Works

Revised: 1/28/11
Scale: NTS
600.11
Sheet 1 of 1

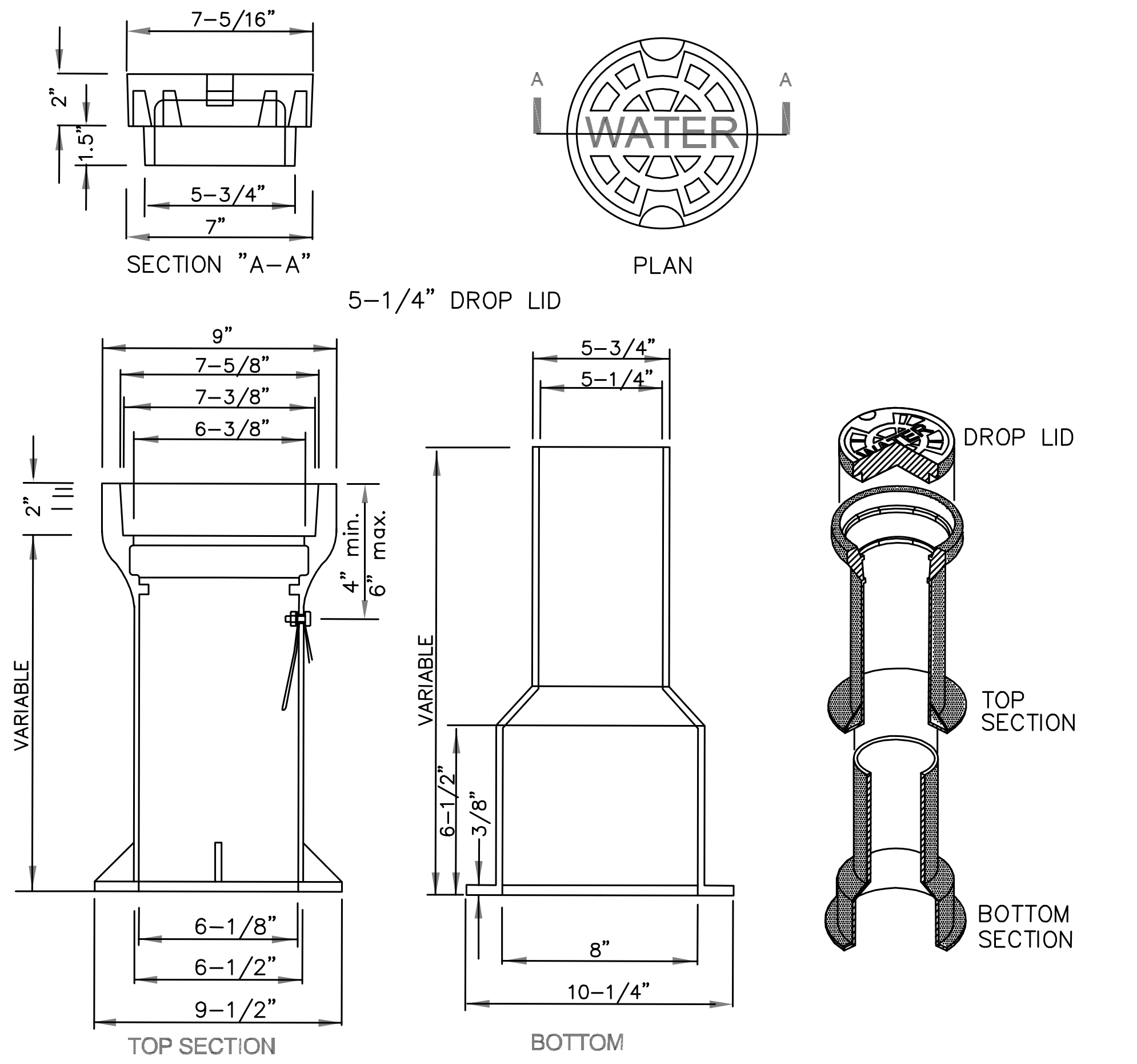
7-5/16"
2"
1.5"
5-3/4"
7"
SECTION "A-A"
A
A
WATER
PLAN
5-1/4" DROP LID
9"
7-5/8"
7-3/8"
6-3/8"
2"
4" min.
6" max.
VARIABLE
6-1/8"
6-1/2"
9-1/2"
TOP SECTION
5-3/4"
5-1/4"
VARIABLE
6-1/2"
3/8"
8"
10-1/4"
BOTTOM
DROP LID
TOP SECTION
BOTTOM SECTION

NOTES:
1. VALVE BOX SHALL BE 3 PART SLIP-TYPE MANUFACTURED BY ALABAMA PIPE CO., CHAPMAN VALVE CO., COLOMBIAN IRON WORKS, R.D. WOOD CO. OR APPROVED EQUAL.
2. VALVE BOX SHALL BE 3-PIECE CLOSE GRAINED CAST IRON SLIP-TYPE VALVE BOX WITH A MINIMUM THICKNESS OF 3/16".
3. VALVE BOX SHALL HAVE RAISED LETTERS "WATER" CAST INTO COVER.
4. VALVE BOX SHALL HAVE 3/8" HOLE DRILLED IN TOP SECTION THRU WHICH A 1/4"x1-1/2" GALVANIZED BOLT SHALL BE USED TO SECURE A MINIMUM 12 GAUGE, SINGLE STRAND, COATED COPPER TRACER WIRE FOR NON-FERROUS PIPE. A 1/2" WASHER SHALL BE USED BETWEEN NUT AND INSIDE OF BOX.TIGHTEN HAND TIGHT.
5. SCREW TYPE VALVE BOXES ARE NOT ACCEPTABLE.
6. DIMENSIONS SHOWN ARE FOR INFORMATION ONLY AND VARY BASED UPON THE MANUFACTURER.
7. VALVE BOX SECTIONS ARE REQUIRED. THE USE OF PIPE IN LIEU OF VALVE BOX SECTIONS SHALL NOT BE PERMITTED.
8. TRACING WIRE SHALL BE INSTALLED OUTSIDE OF BOX.

north carolina
DUNN
city of dunn

VALVE BOX

CITY of DUNN
NORTH CAROLINA
Department of Public Works

Revised: 1/28/11
Scale: NTS
600.10
Sheet 1 of 1

TC^2
ENGINEERING, PLLC
201 N. Front Street
Suite M-108
Wilmington, NC 28401
910-547-5856

NO.	REVISION	DATE

SAMET HARNETT COUNTY 1

CONSTRUCTION DETAILS

ORIGINAL MAP SIZE
24" X 36"
DRAWN: BPE
CHECKED: WPC
PROJECT NO.:

SHEET:

C5.6

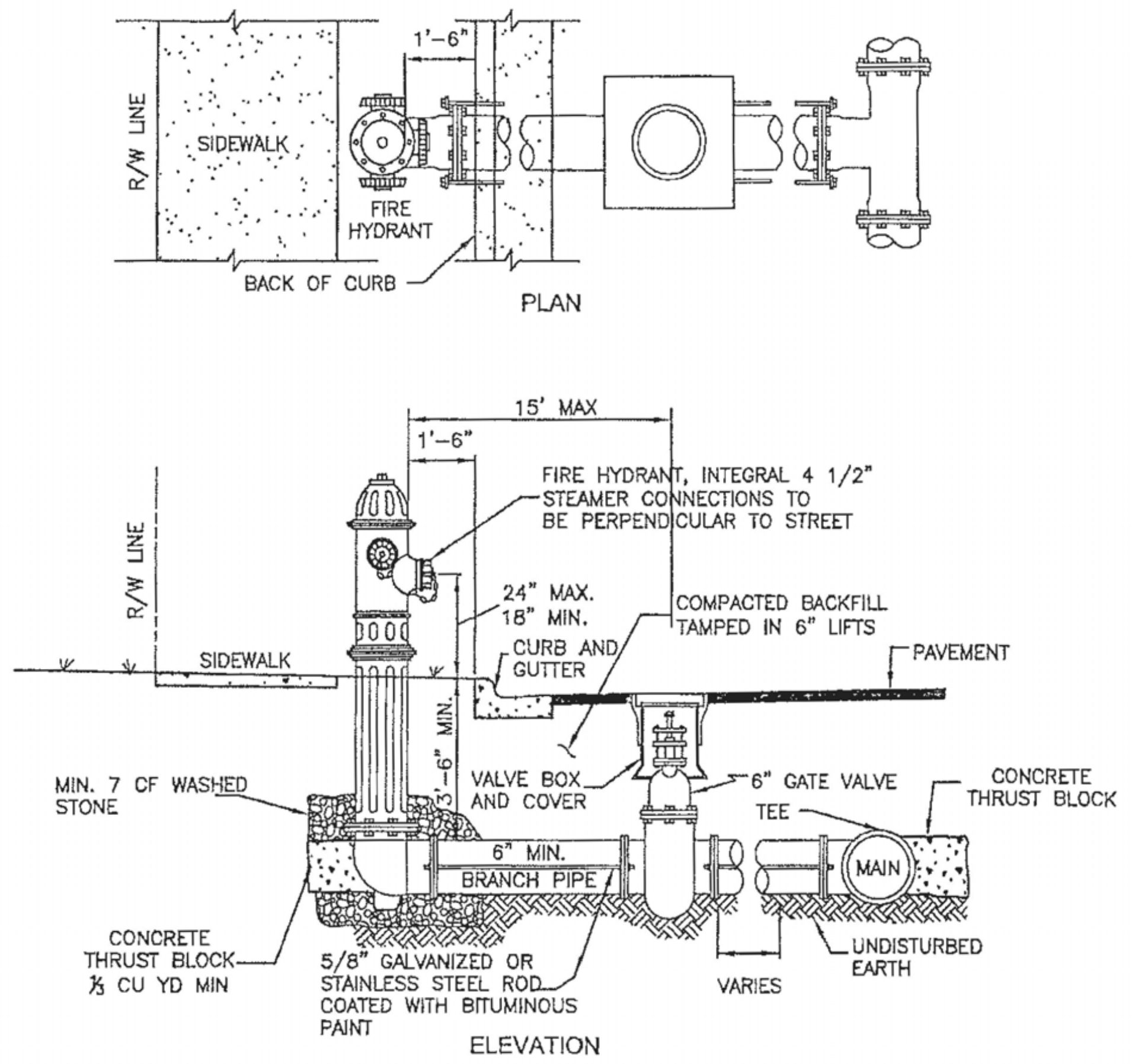
R/W LINE
SIDEWALK
1'-6"
FIRE HYDRANT
BACK OF CURB
PLAN
15' MAX
1'-6"
R/W LINE
FIRE HYDRANT, INTEGRAL 4 1/2" STEAMER CONNECTIONS TO BE PERPENDICULAR TO STREET
24" MAX. 18" MIN.
COMPACTED BACKFILL TAMPED IN 6" LIFTS
CURB AND GUTTER
PAVEMENT
SIDEWALK
3'-6" MIN.
MIN. 7 CF WASHED STONE
VALVE BOX AND COVER
6" GATE VALVE
TEE
CONCRETE THRUST BLOCK
6" MIN. BRANCH PIPE
MAIN
CONCRETE THRUST BLOCK ⅓ CU YD MIN
5/8" GALVANIZED OR STAINLESS STEEL ROD COATED WITH BITUMINOUS PAINT
VARIES
UNDISTURBED EARTH
ELEVATION

GENERAL NOTES:

1. ALL CONCRETE BLOCKING SHALL BE 3000 P.S.I. MINIMUM.
2. ALL HYDRANT VALVES SHALL BE RODDED TO MAIN LINE.
3. HYDRANT TO BE LOCATED 10' FROM P.T. OR P.C. AT INTERSECTIONS.
4. THE HYDRANT PUMPER NOZZLE SHALL BE OF ONE-PIECE DESIGN.
5. THE NOZZLE SHALL BE AN INTEGRAL PART OF THE FIRE HYDRANT AND MUST BE FURNISHED BY THE MANUFACTURER OR AUTHORIZED DISTRIBUTOR. ADAPTERS WILL NOT BE ACCEPTED.

north carolina
DUNN
city of dunn

STANDARD FIRE HYDRANT

CITY of DUNN
NORTH CAROLINA
Department of Public Works

Revised: 1/28/11
Scale: NTS
600.0
Sheet 1 of 1

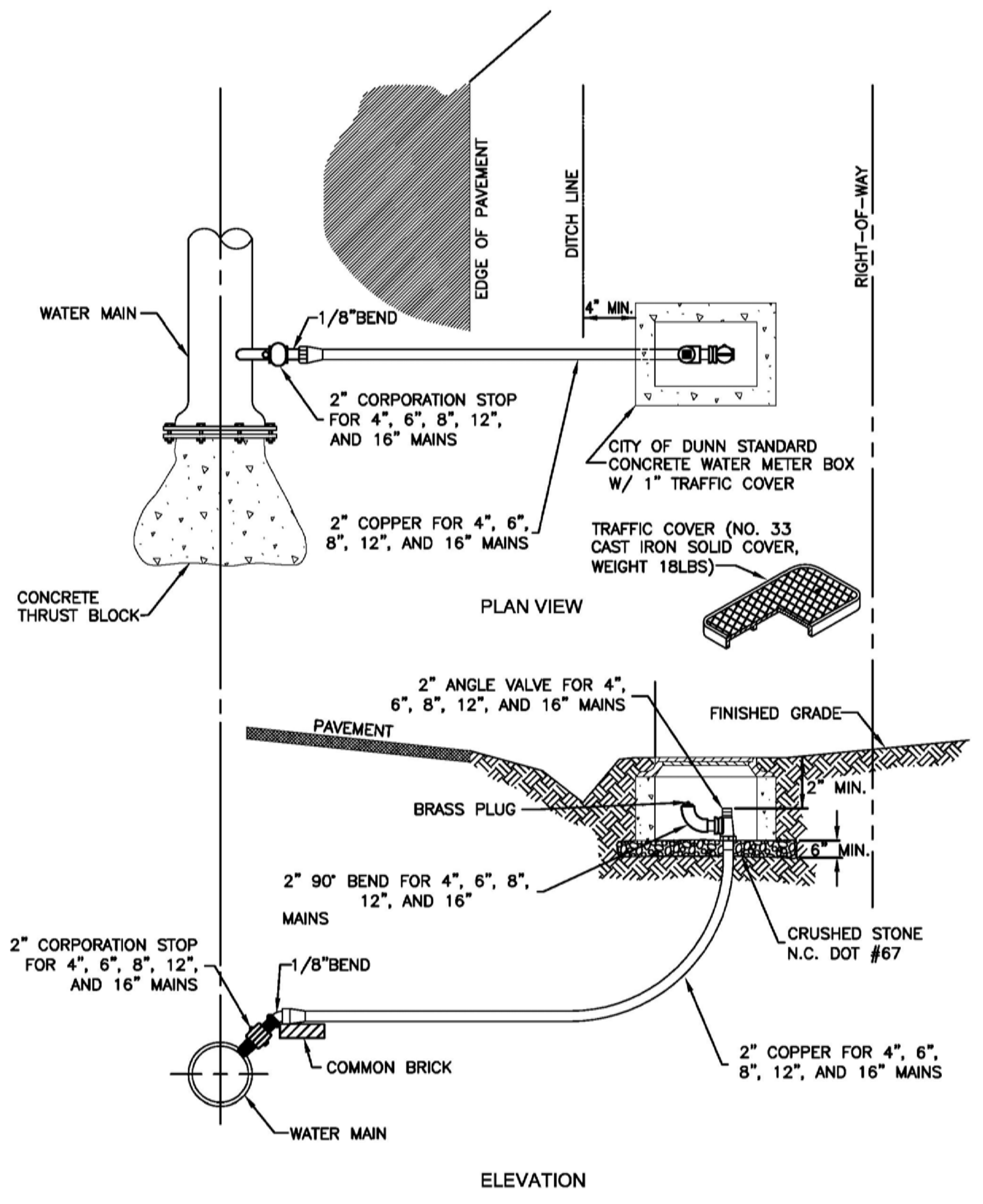
EDGE OF PAVEMENT
DITCH LINE
RIGHT-OF-WAY
WATER MAIN
1/8"BEND
4" MIN.
2" CORPORATION STOP FOR 4", 6", 8", 12", AND 16" MAINS
CITY OF DUNN STANDARD CONCRETE WATER METER BOX W/ 1" TRAFFIC COVER
2" COPPER FOR 4", 6", 8", 12", AND 16" MAINS
TRAFFIC COVER (NO. 33 CAST IRON SOLID COVER, WEIGHT 18LBS)
CONCRETE THRUST BLOCK
PLAN VIEW
2" ANGLE VALVE FOR 4", 6", 8", 12", AND 16" MAINS
FINISHED GRADE
PAVEMENT
2" MIN.
BRASS PLUG
6" MIN.
2" 90° BEND FOR 4", 6", 8", 12", AND 16" MAINS
CRUSHED STONE N.C. DOT #67
2" CORPORATION STOP FOR 4", 6", 8", 12", AND 16" MAINS
1/8"BEND
COMMON BRICK
2" COPPER FOR 4", 6", 8", 12", AND 16" MAINS
WATER MAIN
ELEVATION

north carolina
DUNN
city of dunn

BLOW-OFF ASSEMBLY

CITY of DUNN
NORTH CAROLINA
Department of Public Works

Revised: 1/28/11
Scale: NTS
600.01
Sheet 1 of 1

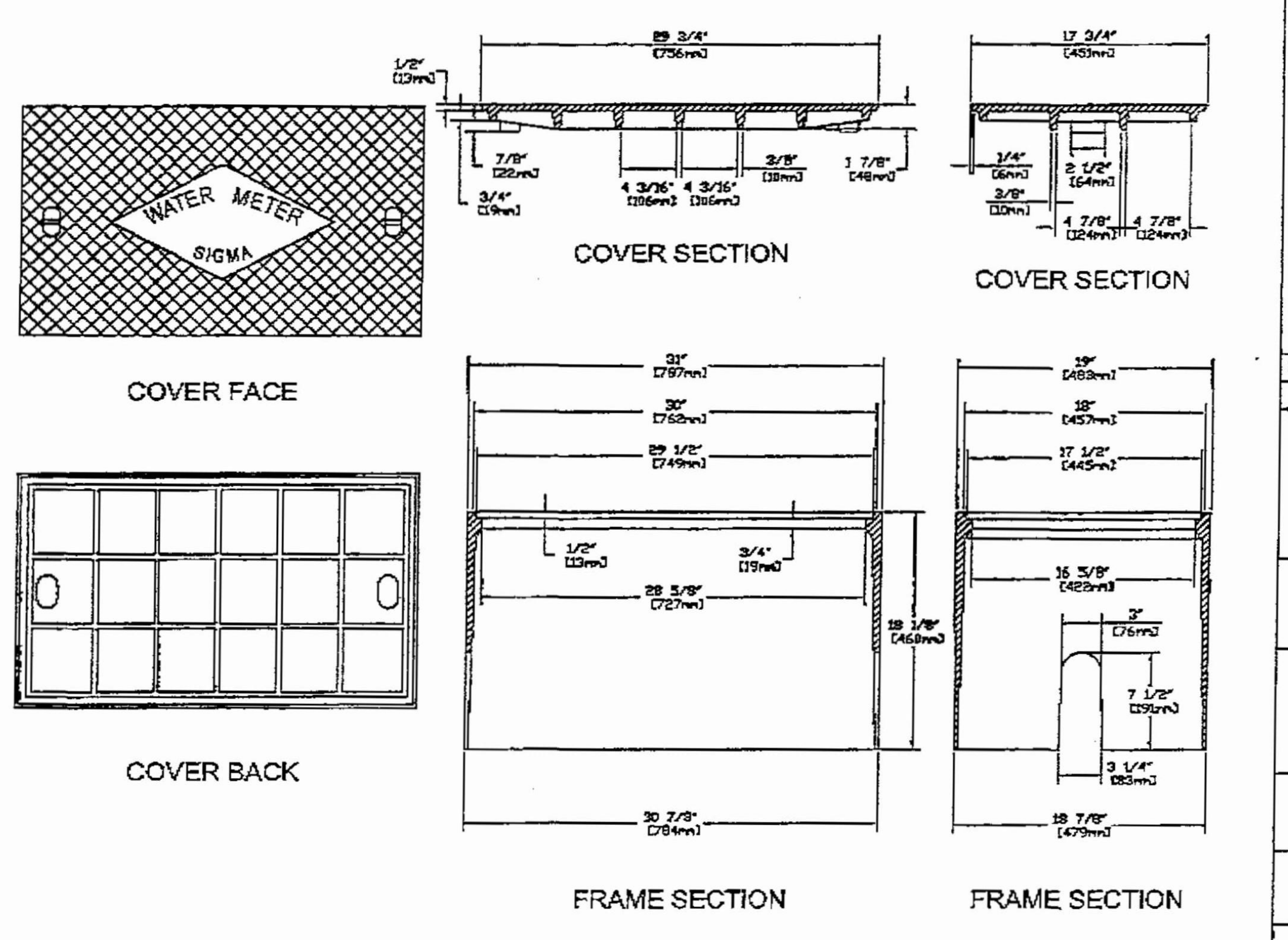
WATER METER
SIGMA
COVER FACE
1/2" [13mm]
29 3/4" [756mm]
7/8" [22mm]
3/4" [19mm]
4 3/16" [106mm]
4 3/16" [106mm]
3/8" [10mm]
1 7/8" [48mm]
COVER SECTION
17 3/4" [451mm]
1/4" [6mm]
3/8" [10mm]
2 1/2" [64mm]
4 7/8" [124mm]
4 7/8" [124mm]
COVER SECTION
COVER BACK
31" [787mm]
30" [762mm]
29 1/2" [749mm]
1/2" [13mm]
3/4" [19mm]
28 5/8" [727mm]
18 1/8" [460mm]
30 7/8" [784mm]
FRAME SECTION
19" [483mm]
18" [457mm]
17 1/2" [445mm]
16 5/8" [422mm]
3" [76mm]
7 1/2" [191mm]
3 1/4" [83mm]
18 7/8" [479mm]
FRAME SECTION

Σ
SIGMA
CORPORATION

(800) 824-4513
PO Box 519
Alexander City, AL 35011

(800) 738-2956
PO Box 1043
Rockingham, NC 28380

DRAWN BY: RJL DATE: 6/29/2006

METER BOX
(MBX-5A)

LOAD RATING:
NON-TRAFFIC

MATERIAL SPECIFICATION:
CAST IRON
ASTM A 48 CLASS 30B

OPEN AREA - SQ. IN.
N/A

CATALOG NUMBER
MB-2202

north carolina
DUNN
city of dunn

METER BOX for 1 1/2" & 2" WATER SERVICE

CITY of DUNN
NORTH CAROLINA
Department of Public Works

Revised: 1/28/11
Scale: NTS
600.06
Sheet 2 of 2

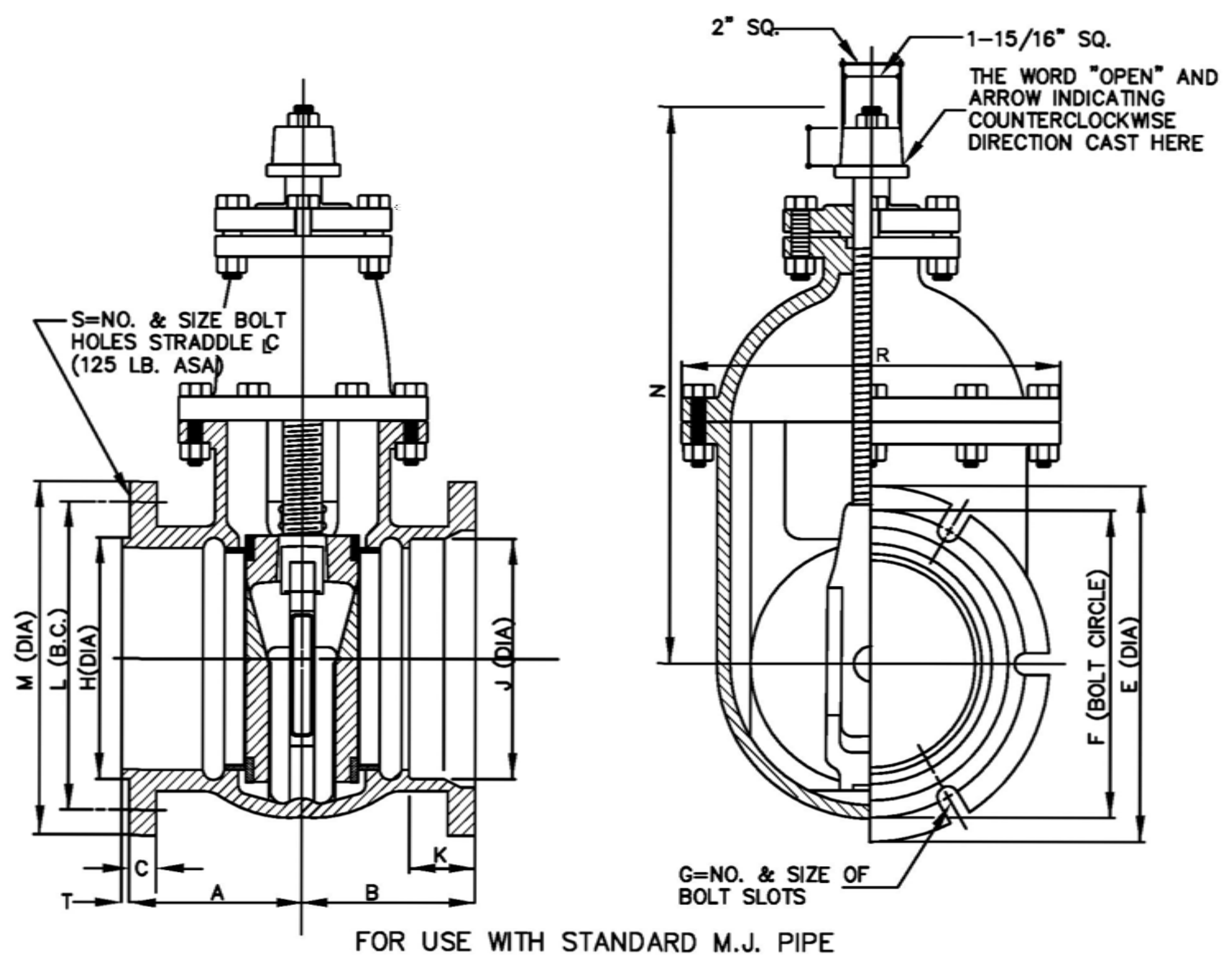
2" SQ.
1-15/16" SQ.
THE WORD "OPEN" AND ARROW INDICATING COUNTERCLOCKWISE DIRECTION CAST HERE
S=NO. & SIZE BOLT HOLES STRADDLE ℄ (125 LB. ASA)
N
R
M (DIA)
L (B.C.)
H(DIA)
J (DIA)
F (BOLT CIRCLE)
E (DIA)
C
T
A
B
K
G=NO. & SIZE OF BOLT SLOTS

FOR USE WITH STANDARD M.J. PIPE

NOTES:
1. ALL MATERIALS SHALL BE IN ACCORDANCE WITH CITY STANDARDS.
2. RAISED MALE FACE SHALL BE REQUIRED TO PROVIDE FOR PROPER ALIGNMENT OF THE TAPPING SLEEVE.
3. ALL VALVES SHALL HAVE 2" SQUARE OPERATING NUT AND SHALL OPEN COUNTERCLOCKWISE.
4. RESILIENT WEDGE GATE VALVE SHALL BE AS MANUFACTURED BY MUELLER CORP., AMERICAN DARLING OR CLOW CORP.
5. VALVE BODY, BONNET AND GATE SHALL BE IN ACCORDANCE WITH AWWA C-509/C-515 AND NSF61.
6. VALVE BODY AND BONNET SHALL BE COATED ON ALL INTERIOR AND EXTERIOR SURFACES WITH A FUSION BONDED EPOXY IN ACCORDANCE WITH AWWA C-550-90.
7. ALL VALVES 24" AND SMALLER SHALL HAVE A SAFE WORKING PRESSURE OF 250 PSI.
8. SEE TAPPING SLEEVE FOR ADDITIONAL INFORMATION.
9. DIMENSIONS SHOWN ARE FOR REFERENCE AND MAY VARY BASED UPON MANUFACTURER. VALVES SHALL BE SIMILAR IN NATURE TO THAT SHOWN AND SHALL NOT DEVIATE IN ESSENTIAL DETAILS.
10. ALL TAPPING SLEEVES SHALL BE HYDROSTATICALLY PRESSURE TESTED PRIOR TO THE TAP BEING ACCOMPLISHED. TEST SHALL BE APPROVED BY PWC PROJECT COORDINATOR PRIOR TO BEGINNING TAPPING PROCESS.

VALVE SIZE	A	B	C	D	E	F	G	H	J	K	L	M	N	R	S	T	TURNS TO OPEN	WEIGHT W/ACC
4	4-3/8	5-7/8	15/16	1-1/2	9	7-1/2	4-7/8	4-63/64	4-29/32	2-1/2	7-1/2	9	14-1/8	9	8-3/4	1/4	14	118
6	6-7/8	6-1/4	1	1-5/8	11	9-1/2	6-7/8	6-63/64	7	2-1/2	9-1/2	11	17-5/8	11-3/4	8-7/8	1/4	21	175
8	6-1/2	7-1/4	1-1/8	1-3/4	13-1/4	11-3/4	6-7/8	8-63/64	9-5/32	2-1/2	11-3/4	13-1/2	21	14-1/4	8-7/8	1/4	28	274
12	7	8-1/4	1-1/4	1-3/4	17-7/8	16-1/4	8-7/8	12-63/64	13-5/16	2-1/2	17	19	28-1/4	19-1/8	12-1	1/4	39	570
16	8-1/2	9-1/8	1-7/16	2-1/16	23	21	12-7/8	16-15/16	17-35/64	3-1/2	21-1/4	23-1/2	38-5/8	26-1/8	16-1 1/8	1/4	55	1140
24	10-1/2	14-1/4	1-7/8	2-1/2	31-3/4	30	16-7/8	24-15/16	25-15/16	3-1/2	29-1/2	32	54-5/8	37-5/8	20-1 3/8	5/16	79	3225

north carolina
DUNN
city of dunn

M.J. TAPPING VALVE

CITY of DUNN
NORTH CAROLINA
Department of Public Works

Revised: 1/28/11
Scale: NTS
600.05
Sheet 2 of 4

VAULT COUPLING

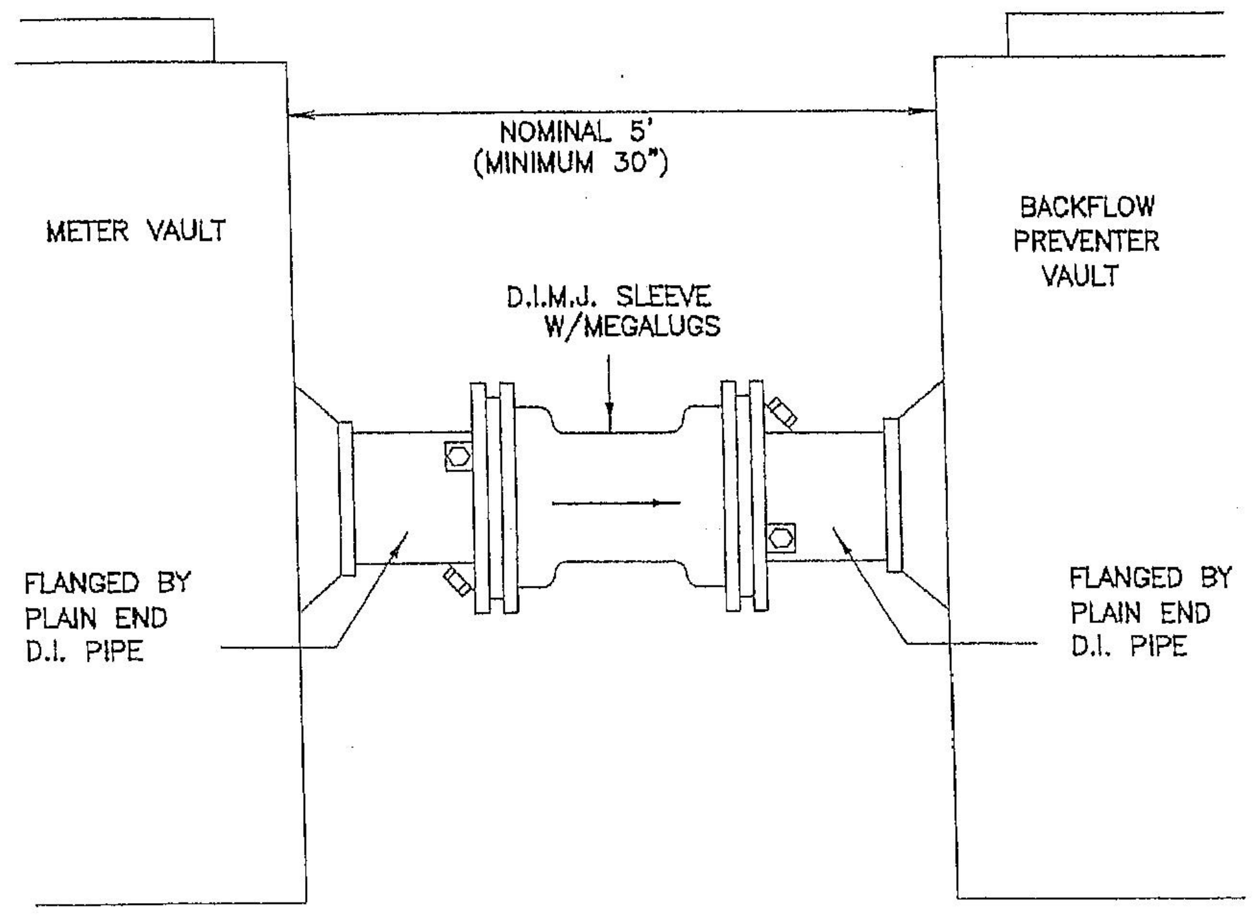
NOMINAL 5'
(MINIMUM 30")
METER VAULT
BACKFLOW PREVENTER VAULT
D.I.M.J. SLEEVE W/MEGALUGS
FLANGED BY PLAIN END D.I. PIPE
FLANGED BY PLAIN END D.I. PIPE

north carolina
DUNN
city of dunn

VAULT COUPLING

CITY of DUNN
NORTH CAROLINA
Department of Public Works

Revised: 1/28/11
Scale: NTS
600.08
Sheet 1 of 1

TC^2
ENGINEERING, PLLC
201 N. Front Street
Suite M-108
Wilmington, NC 28401
910-547-5856

NO.	REVISION	DATE

SAMET HARNETT COUNTY 1
CONSTRUCTION DETAILS

ORIGINAL MAP SIZE
24" X 36"
DRAWN: BPE
CHECKED: WPC
PROJECT NO.:

SHEET:
C5.7

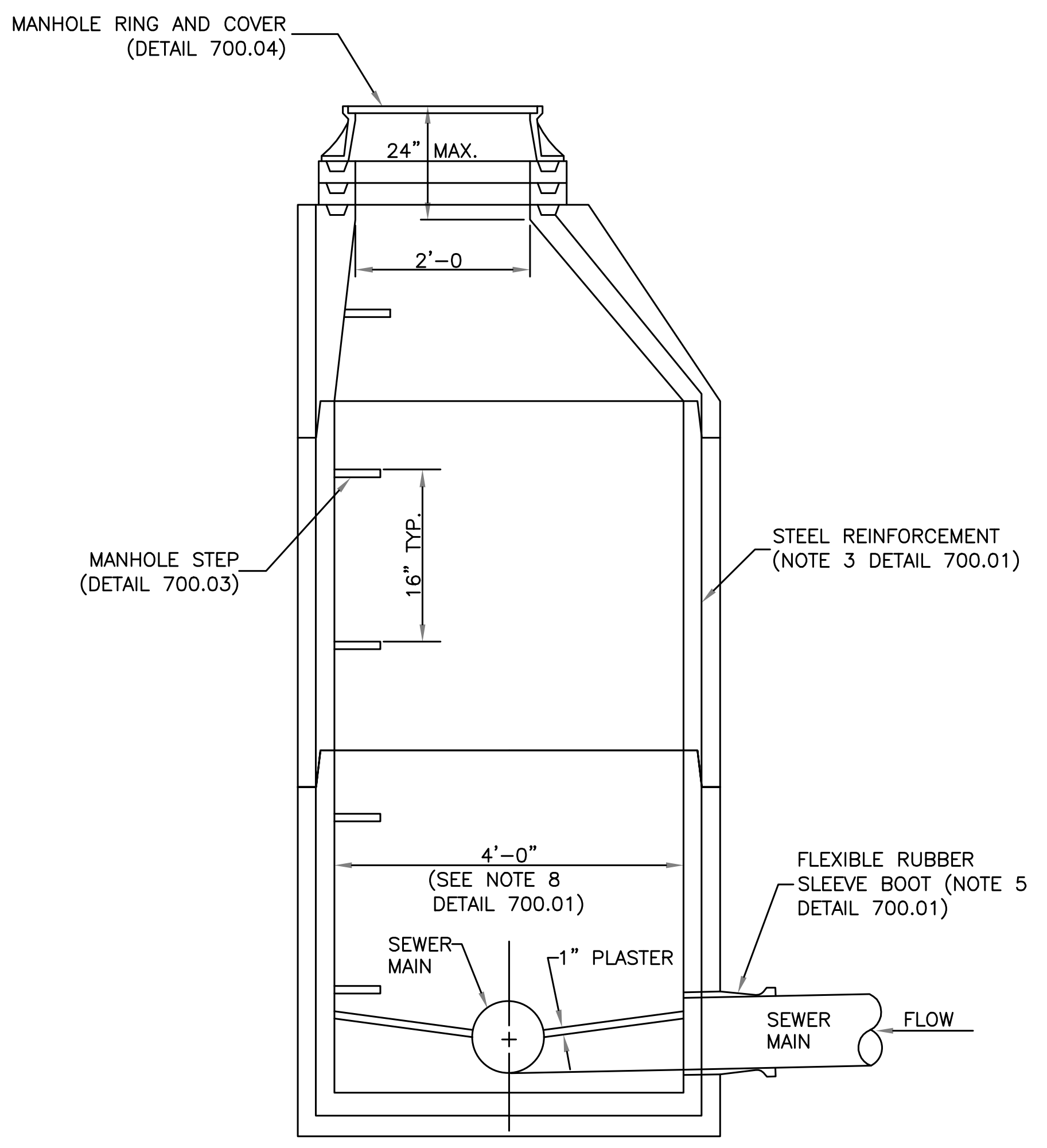
MANHOLE RING AND COVER
(DETAIL 700.04)
24" MAX.
2'–0
MANHOLE STEP
(DETAIL 700.03)
16" TYP.
STEEL REINFORCEMENT
(NOTE 3 DETAIL 700.01)
4'–0"
(SEE NOTE 8
DETAIL 700.01)
FLEXIBLE RUBBER
SLEEVE BOOT (NOTE 5
DETAIL 700.01)
SEWER
MAIN
1" PLASTER
SEWER
MAIN
FLOW

north carolina
DUNN
city of dunn

PRECAST 4' DIA SANITARY MANHOLE

FOR SEWER MAINS LESS THAN 18"

CITY of DUNN
NORTH CAROLINA
Department of Public Works

Revised: 1/28/11
Scale: NTS
700.00
Sheet 1 of 1

NOTES

1. ALL PRE CAST CONCRETE MANHOLES SHALL CONFORM TO THE LATEST REVISION OF ASTM C478.
2. CONCRETE SHALL BE 4000 PSI AT 28 DAYS MINIMUM.
3. STEEL REINFORCEMENT SHALL BE GRADE 40 BILLET STEEL CONFORMING TO THE LATEST REVISION OF ASTM–A–185 FOR WALL REINFORCEMENT, AND THE LATEST REVISION OF ASTM–A615 FOR THE BASE REINFORCEMENT.
4. STANDARD JOINTS SHALL BE; SEALED WITH PUTTY TYPE PLASTIC CEMENT PER FED. SPEC. SS–C–153 OR AN O–RING TYPE JOINT CONFORMING TO THE LATEST REVISION OF ASTM–C443.
5. MANHOLE INLETS AND OUTLETS SHALL BE CAST IN PLACE FLEXIBLE RUBBER SLEEVES BOOTS PER THE LATEST REVISION OF ASTM–C923.
6. INVERTS TO BE CONSTRUCTED OF BRICK WITH A CONCRETE BENCH (DETAIL 700.02).
7. A STANDARD 0.20 FOOT DROP SHALL BE PROVIDED AT EACH MANHOLE. THE MAXIMUM SEPARATION OR INVERT IN TO INVERT OUT WITHIN A MANHOLE IS 24 INCHES. WHEN THE SEPARATION IS GREATER THAN 24 INCHES A DROP MANHOLE MUST BE USED.
8. MANHOLES GREATER THAN 20 FEET IN DEPTH SHALL HAVE AN INSIDE DIAMETER OR 5'–0". FOR SANITARY SEWER MAINS GREATER THAN EIGHTEEN INCHES (18") IN DIAMETER, MANHOLES SHALL BE A MINIMUM OF 5'–0" IN DIAMETER.
9. RIM ELEVATIONS SHALL BE AT GRADE IN STREETS & PARKING LOTS.
10. MANHOLES NOT LOCATED IN ROADWAYS SHALL HAVE A TOP ELEVATION A MINIMUM OF 12 INCHES ABOVE FINISH GRADE. MANHOLES LOCATED ALONG OUTFALLS SHALL HAVE A TOP ELEVATION A MINIMUM OF 24 INCHES ABOVE FINISHE GRADE OR 100 YEAR FLOOD PLAIN, OR 12 INCHES ABOVE 500 YEAR FLOOD PLAIN, WHICHEVER IS HIGHER. THE 100–YEAR FLOOD ELEVATION SHALL BE NOTED ON THE CONSTRUCTION DRAWINGS.

north carolina
DUNN
city of dunn

SANITARY MANHOLE NOTES

CITY of DUNN
NORTH CAROLINA
Department of Public Works

Revised: 1/28/11
Scale: NTS
700.01
Sheet 1 of 1

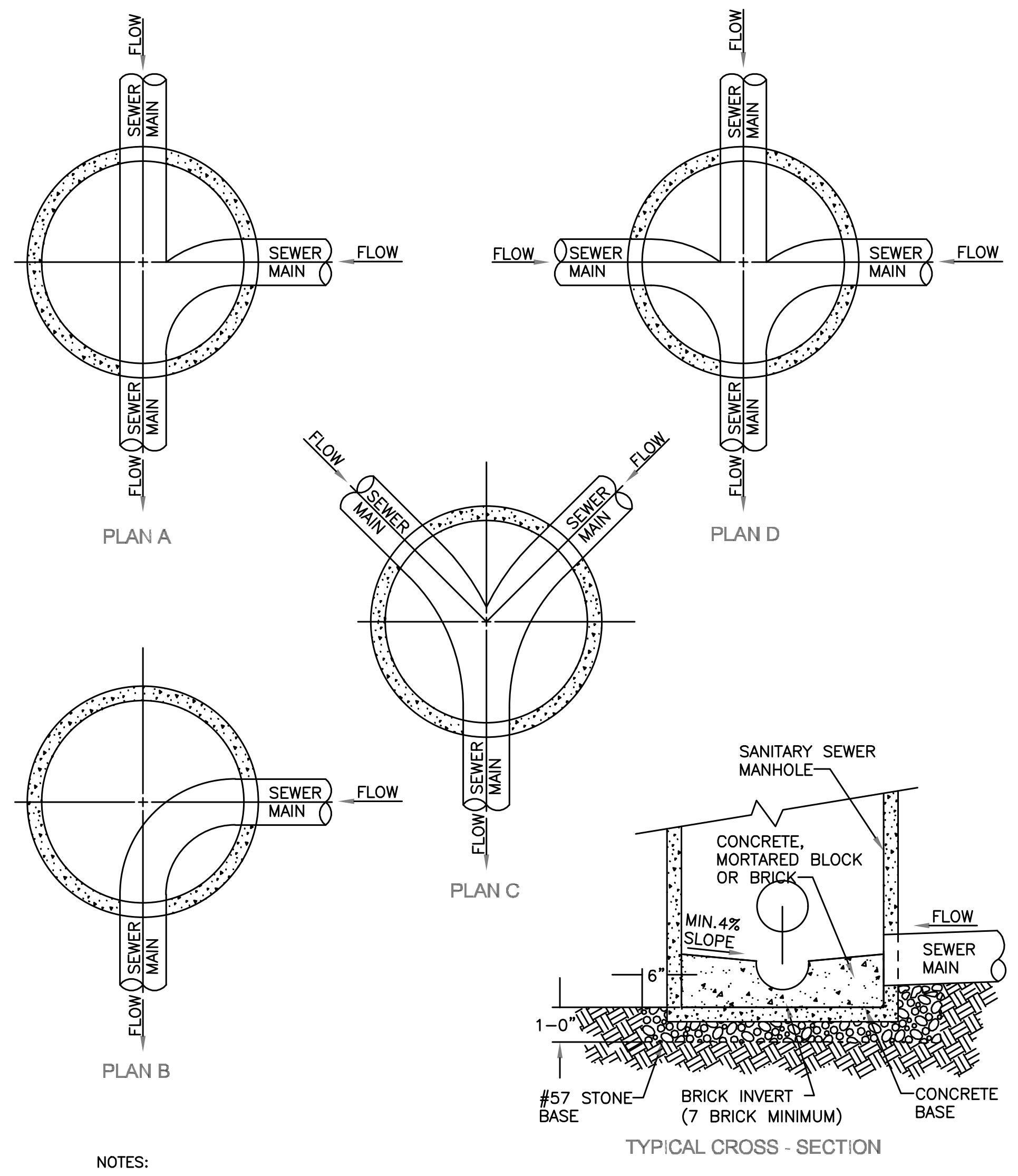
FLOW
SEWER MAIN
SEWER MAIN
FLOW
SEWER MAIN
FLOW
PLAN A
FLOW
SEWER MAIN
FLOW
SEWER MAIN
FLOW
SEWER MAIN
SEWER MAIN
FLOW
PLAN D
FLOW
SEWER MAIN
FLOW
SEWER MAIN
SEWER MAIN
FLOW
PLAN C
SEWER MAIN
FLOW
SEWER MAIN
FLOW
PLAN B
SANITARY SEWER
MANHOLE
CONCRETE,
MORTARED BLOCK
OR BRICK
MIN.4%
SLOPE
FLOW
SEWER
MAIN
6"
1–0"
#57 STONE
BASE
BRICK INVERT
(7 BRICK MINIMUM)
CONCRETE
BASE
TYPICAL CROSS - SECTION

NOTES:

1. INVERT MATERIAL SHALL BE CONCRETE CAST IN PLACE WITH A SMOOTH FINISH.
2. WIDTH OF INVERT SHALL MATCH INSIDE DIAMETER OF INCOMING AND OUTGOING PIPES.
3. BRICK INVERT SHALL BE FORMED AS SHOWN.
4. ALL INVERT ELEVATIONS SHALL BE AS SHOWN ON APPROVED CONSTRUCTION PLANS.
5. BENCHES TO BE BUILT OUT OF CONCRETE, MORTARED BLOCK OR BRICK. STONE IS NOT ACCEPTABLE.

north carolina
DUNN
city of dunn

SANITARY SEWER MANHOLE INVERT

CITY of DUNN
NORTH CAROLINA
Department of Public Works

Revised: 1/28/11
Scale: NTS
700.05
Sheet 1 of 1

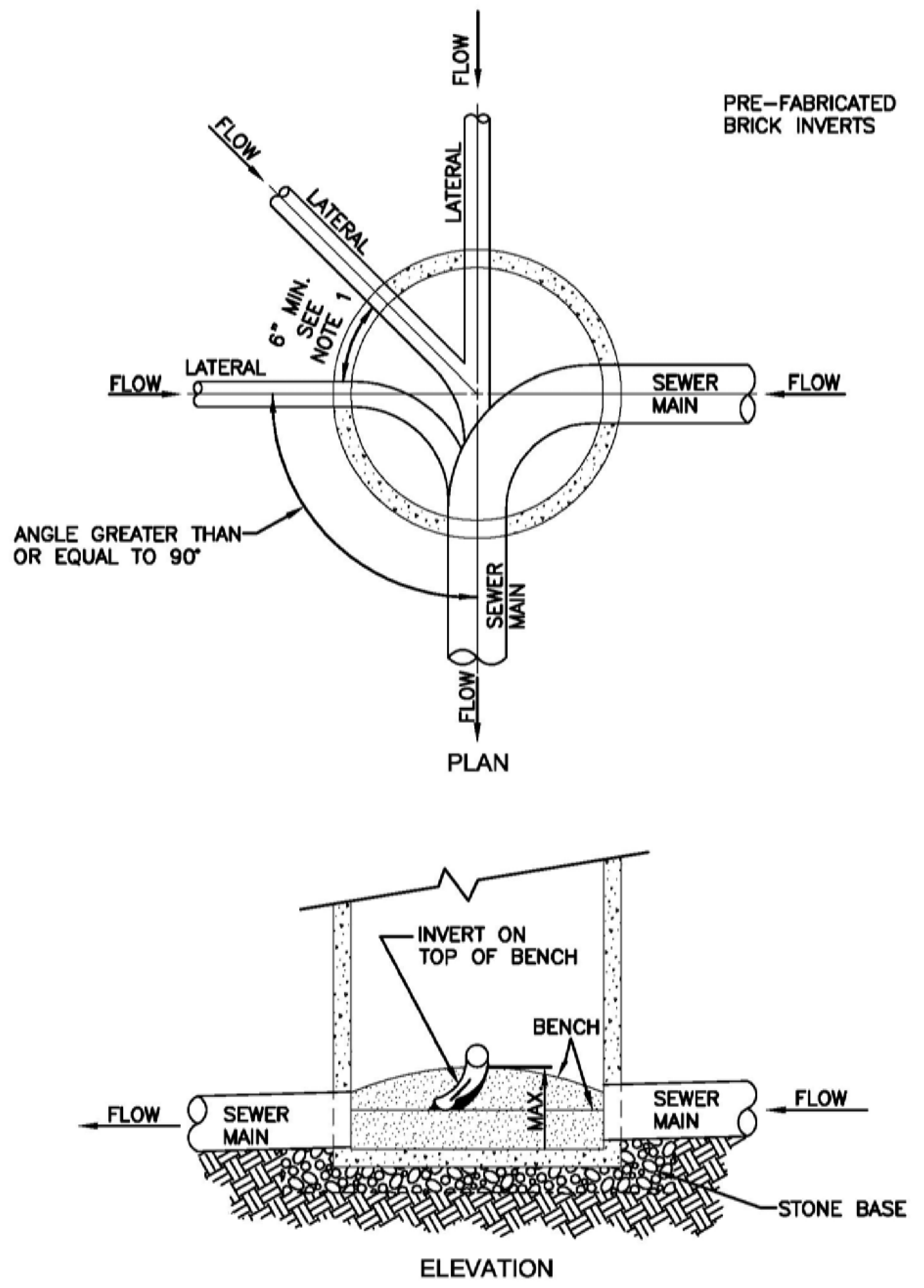
FLOW
PRE–FABRICATED
BRICK INVERTS
FLOW
LATERAL
LATERAL
6" MIN. SEE NOTE 1
FLOW
LATERAL
SEWER
MAIN
FLOW
ANGLE GREATER THAN
OR EQUAL TO 90°
SEWER
MAIN
FLOW
PLAN
INVERT ON
TOP OF BENCH
BENCH
MAX.
FLOW
SEWER
MAIN
SEWER
MAIN
FLOW
STONE BASE
ELEVATION

NOTES:

1. THE MINIMUM SPACING FROM THE EDGE OF A CORE FOR A LATERAL TO THE EDGE OF THE NEXT CORE SHALL BE 6 INCHES.
2. SEWER LATERAL SHALL NOT ENTER A MANHOLE AT AN ANGLE LESS THAN 90° TO THE EFFLUENT PIPE.
3. ALL LATERALS TO BE INSTALLED AT THE TOP OF THE BENCH.
4. PROVIDE BRICK OR CONCRETE FOR INVERT.
5. INVERTS TO BE BUILT FROM LATERAL TO EFFLUENT PIPE.
6. THE MAXIMUM NUMBER OF LATERALS FOR ANY ONE MANHOLE IS FIVE (5).
7. ALL NEW LATERALS INTO MANHOLES MUST BE CORE DRILLED AND INSTALLED WITH A FLEXIBLE RUBBER BOOT.

north carolina
DUNN
city of dunn

SANITARY SEWER LATERAL AT MANHOLE

CITY of DUNN
NORTH CAROLINA
Department of Public Works

Revised: 1/28/11
Scale: NTS
700.06
Sheet 1 of 1

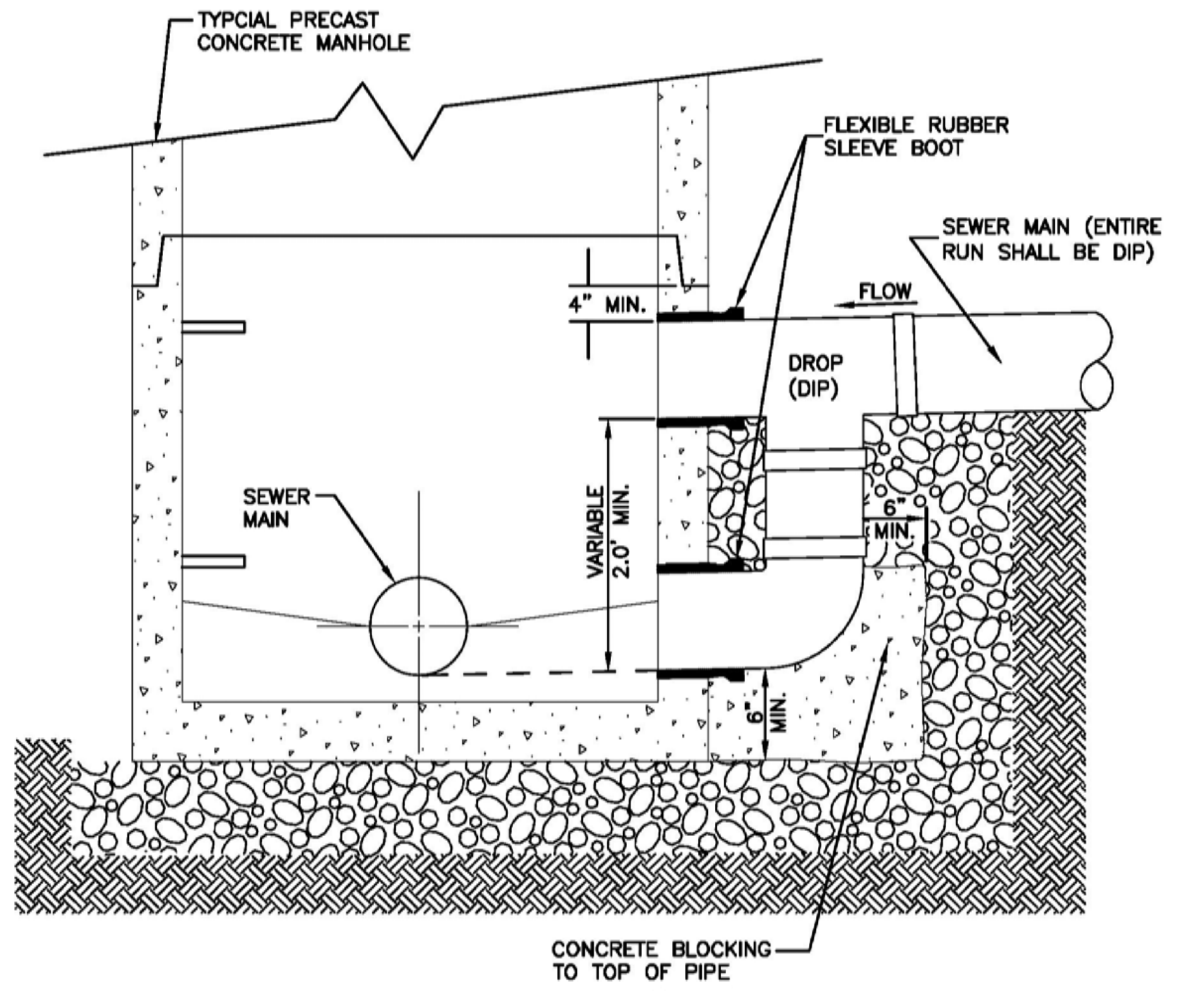
TYPCIAL PRECAST
CONCRETE MANHOLE
FLEXIBLE RUBBER
SLEEVE BOOT
SEWER MAIN (ENTIRE
RUN SHALL BE DIP)
4" MIN.
FLOW
DROP
(DIP)
SEWER
MAIN
VARIABLE
2.0' MIN.
6"
MIN.
6"
MIN.
CONCRETE BLOCKING
TO TOP OF PIPE

north carolina
DUNN
city of dunn

SANITARY SEWER DROP MANHOLE

CITY of DUNN
NORTH CAROLINA
Department of Public Works

Revised: 1/28/11
Scale: NTS
700.07
Sheet 1 of 1

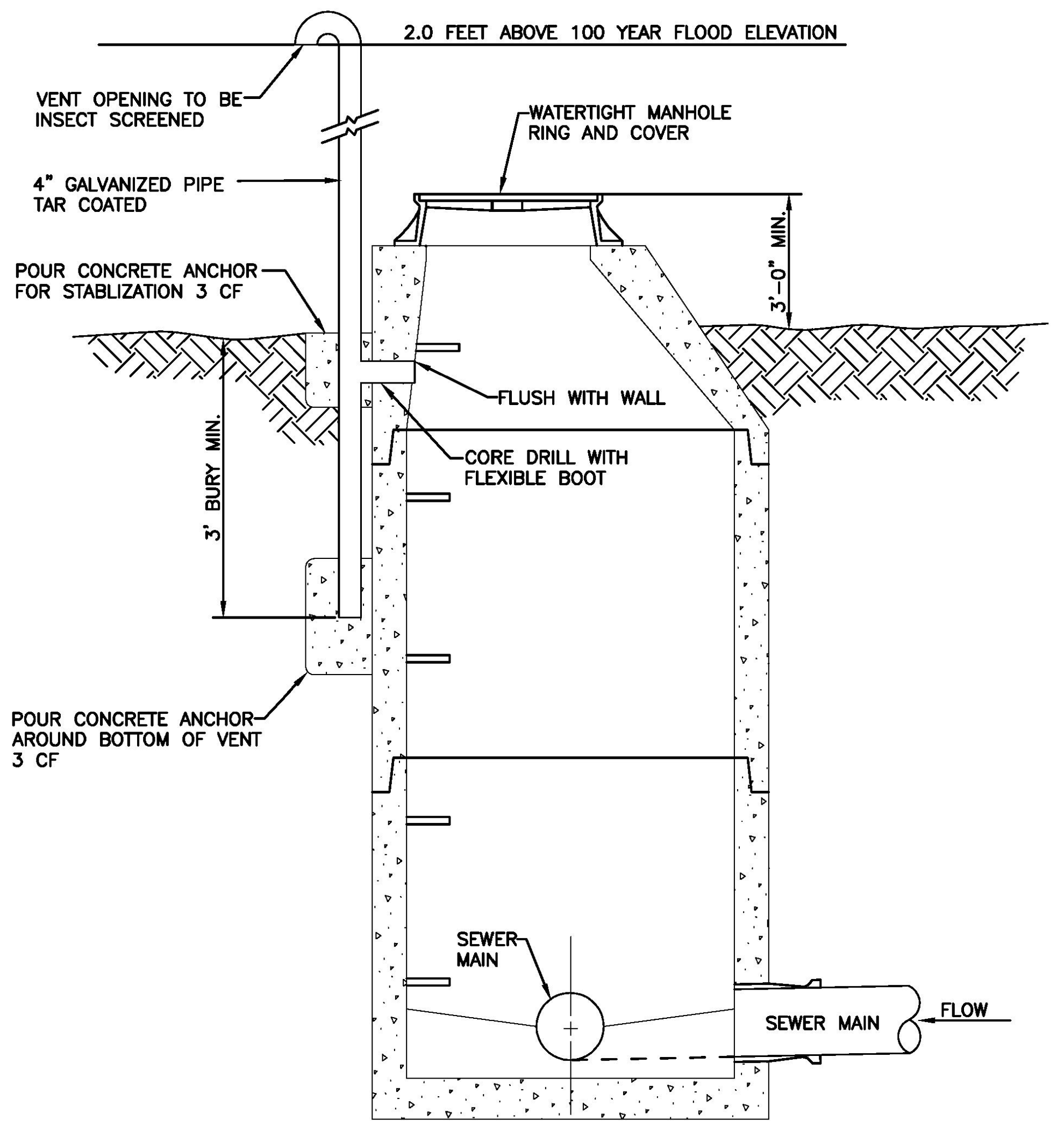
2.0 FEET ABOVE 100 YEAR FLOOD ELEVATION
VENT OPENING TO BE
INSECT SCREENED
WATERTIGHT MANHOLE
RING AND COVER
4" GALVANIZED PIPE
TAR COATED
3'–0" MIN.
POUR CONCRETE ANCHOR
FOR STABLIZATION 3 CF
FLUSH WITH WALL
CORE DRILL WITH
FLEXIBLE BOOT
3' BURY MIN.
POUR CONCRETE ANCHOR
AROUND BOTTOM OF VENT
3 CF
SEWER
MAIN
SEWER MAIN
FLOW

north carolina
DUNN
city of dunn

SANITARY SEWER MANHOLE VENT

CITY of DUNN
NORTH CAROLINA
Department of Public Works

Revised: 1/28/11
Scale: NTS
700.08
Sheet 1 of 1

TC2
ENGINEERING, PLLC
201 N. Front Street
Suite M-108
Wilmington, NC 28401
910-547-5856

NO.	REVISION	DATE

SAMET HARNETT COUNTY 1

CONSTRUCTION DETAILS

ORIGINAL MAP SIZE
24" X 36"
DRAWN: BPE
CHECKED: WPC
PROJECT NO.:

SHEET:
C5.8

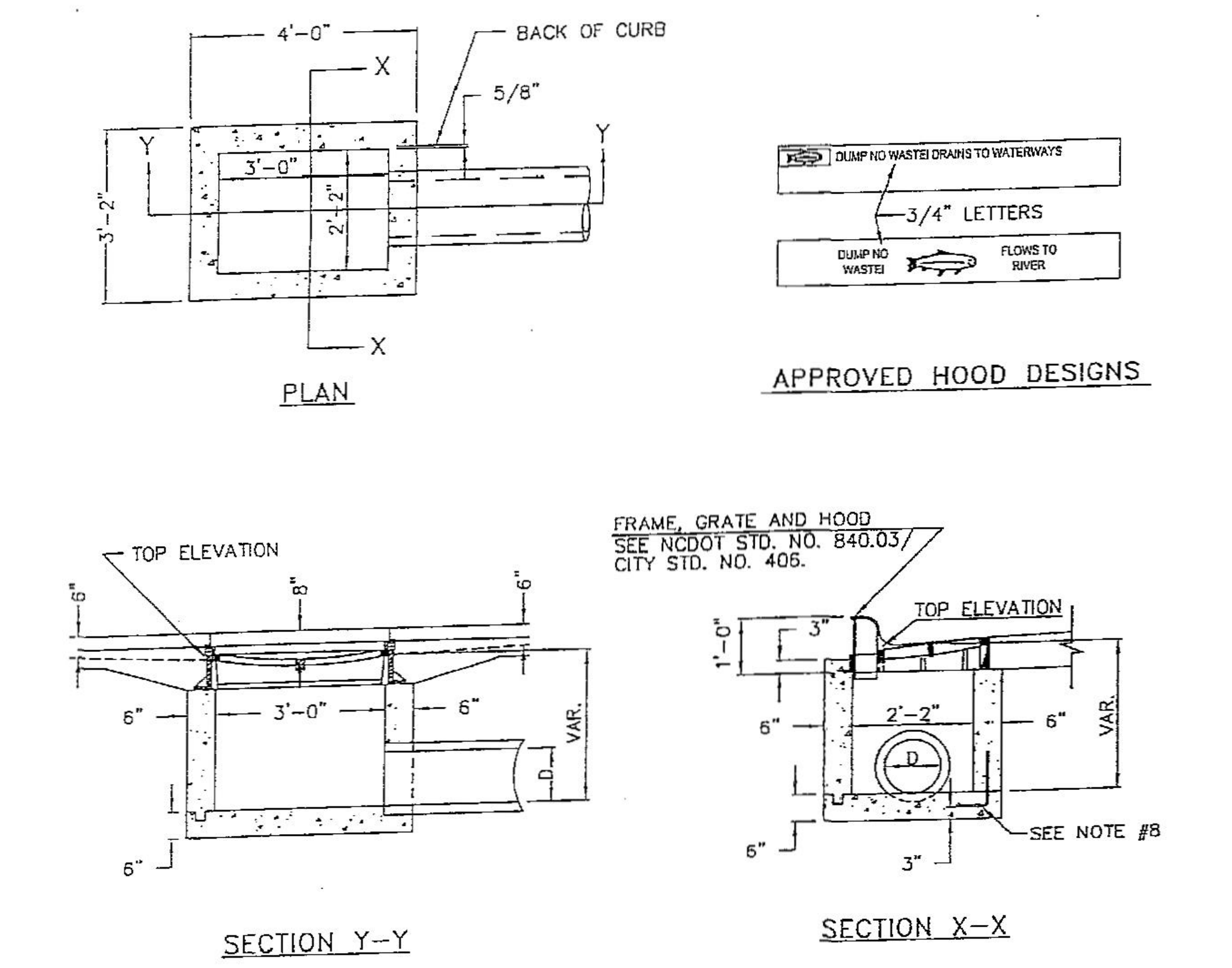
4'-0"
X
BACK OF CURB
5/6"
Y
Y
3'-0"
3'-2"
X
PLAN
3/4" LETTERS
DUMP NO WASTE
FLOWS TO RIVER
APPROVED HOOD DESIGNS
TOP ELEVATION
3'-0"
6"
VAR.
SECTION Y-Y
FRAME, GRATE AND HOOD
SEE NCDOT STD. NO. 840.03/
CITY STD. NO. 405.
TOP ELEVATION
2'-2"
SEE NOTE #8
SECTION X-X

NOTES:

1. PRECAST DESIGN SPECIFICATIONS SHALL CONFORM TO THE LATEST ASTM C913 SPECIFICATIONS FOR "PRECAST CONCRETE WATER AND WASTE WATER STRUCTURES", NCDOT AND THE CITY OF DUNN SPECIFICATIONS.
2. PRECAST STRUCTURES SHALL BE DESIGNED FOR H-20-44 LOADING.
3. PRECAST STRUCTURE SHALL HAVE A MINIMUM CONCRETE COMPRESSIVE STRENGTH OF 4000 psi. IF THE BOTTOM CONCRETE SLAB IS POURED, IT SHALL BE A MINIMUM CONCRETE COMPRESSIVE STRENGTH OF 3000 psi AND SHALL BE POURED INTO FORMS.
4. STEEL REINFORCING DESIGN SHALL CONFORM TO THE REQUIREMENTS OF ASTM C890 SPECIFICATIONS FOR "STRUCTURAL DESIGN LOADING FOR WATER AND WASTEWATER STRUCTURES" AND SHALL UTILIZE GRADE 60 RE-BARS CONFORMING TO THE REQUIREMENTS OF ASTM A615 OR WWF CONFORMING TO THE REQUIREMENTS OF ASTM A185 OR BOTH.
5. ADDITIONAL STEEL REINFORCEMENT SHALL BE INSTALLED AT ALL OPENINGS.
6. USE NCDOT STD NO. 840.03/CITY OF DUNN STD. 800.10 FRAME, GRATE AND HOOD UNLESS OTHERWISE INDICATED. USE TYPE "E", "F", OR "G" GRATES UNLESS OTHERWISE INDICATED.
7. FOR STRUCTURE HEIGHTS OVER 3'-6", 8INSTALL STEPS ON 12" CENTERS. ALL STEPS SHALL CONFORM TO CITY OF DUNN STD. 700.03, OR AN APPROVED EQUAL.
8. OPTIONAL CONSTRUCTION – MONOLITHIC CLASS A PCC POUR. USE 2" KEYWAY OR #4 BAR DOWELS AT 12" CENTERS AT THE CONSTRUCTION JOINT.
9. SEAL JOINTS WITH FLEXIBLE BUTYL RUBBER BASE CONFORMING TO FEDERAL SPECIFICATIONS SS-S-21A, ASSHTO M-198, TYPE B – BUTYL RUBBER.
10. PRECAST CATCH BASIN MINIMUM WALL THICKNESS (SOLID WALL AND BOTTOM SLAB):

HEIGHT OF STRUCTURE	WALL THICKNESS
0' TO 10'	6"
10' TO 16'	8"
OVER 16'	SPECIAL DESIGN

north carolina DUNN city of dunn

PRECAST CATCH BASIN
GRATED INLET
CITY of DUNN
NORTH CAROLINA
Department of Public Works

Revised: 1/28/11
Scale: NTS
800.09
Sheet 1 of 2

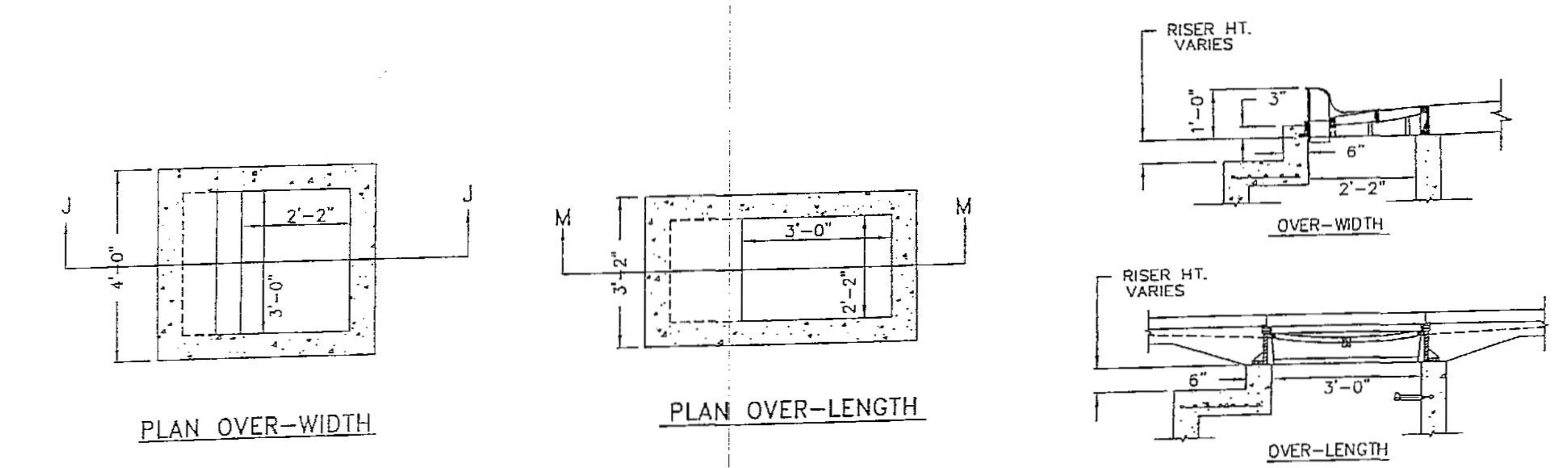
J
J
2'-2"
4'-0"
3'-0"
PLAN OVER-WIDTH
M
M
3'-0"
3'-2"
2'-2"
PLAN OVER-LENGTH
RISER HT. VARIES
3"
6"
2'-2"
OVER-WIDTH
RISER HT. VARIES
3'-0"
6"
OVER-LENGTH
DETAIL SHOWING METHOD OF RISER CONSTRUCTION

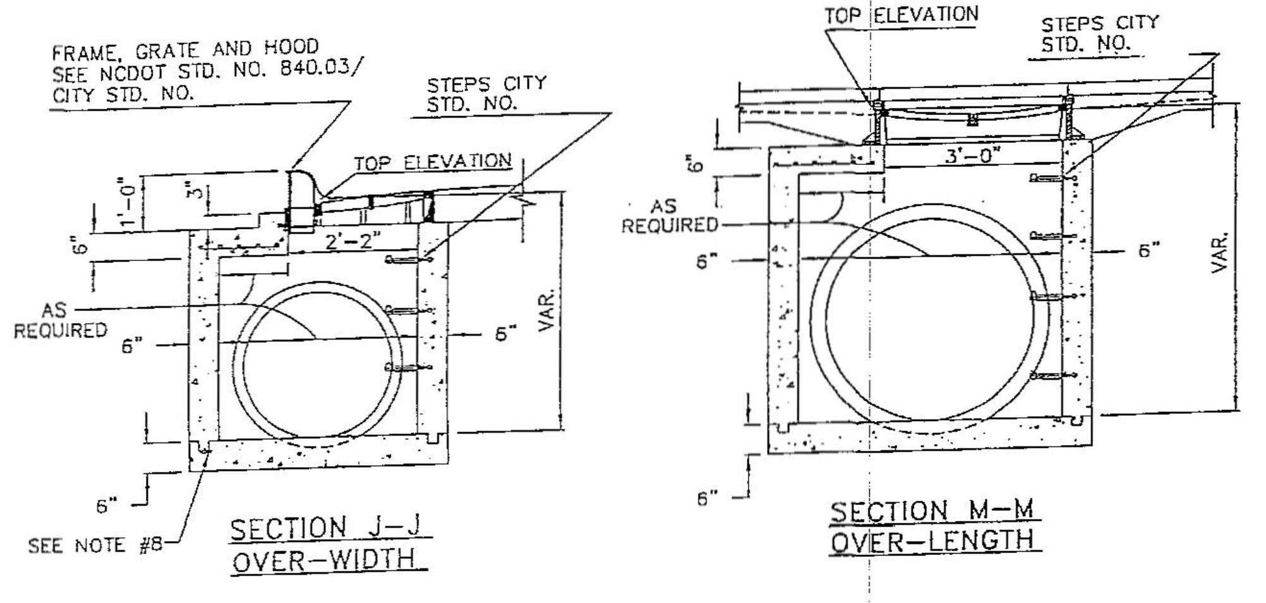
FRAME, GRATE AND HOOD
SEE NCDOT STD. NO. 840.03/
CITY STD. NO.
STEPS CITY STD. NO.
TOP ELEVATION
2'-2"
AS REQUIRED
6"
VAR.
SEE NOTE #8
SECTION J-J
OVER-WIDTH
TOP ELEVATION
STEPS CITY STD. NO.
3'-0"
AS REQUIRED
6"
VAR.
SECTION M-M
OVER-LENGTH

NOTES (CONTINUED):

11. OVER-LENGTH, OVER-WIDTH, AND OVER-LENGTH/OVER WIDTH CATCH BASINS, TYPE A SHALL BE SPECIFIED ON THE PLANS.
12. THE EXTRA SLAB TO ACCOMMODATE OVER-LENGTH AND OVER-WIDTH PIPES, SHALL BE DESIGNED ACCORDING TO SHEET 2 OF 2 OF THE CURRENT NCDOT STD. NO. 840.02.
13. IT IS PREFERRED THAT THERE SHOULD BE A MINIMUM OF 6" LENGTH BETWEEN THE OUTSIDE EDGE OF A PIPE AND THE INSIDE EDGE OF THE INLET WALLS.

north carolina DUNN city of dunn

PRECAST CATCH BASIN
GRATED INLET
CITY of DUNN
NORTH CAROLINA
Department of Public Works

Revised: 1/28/11
Scale: NTS
800.09
Sheet 2 of 2

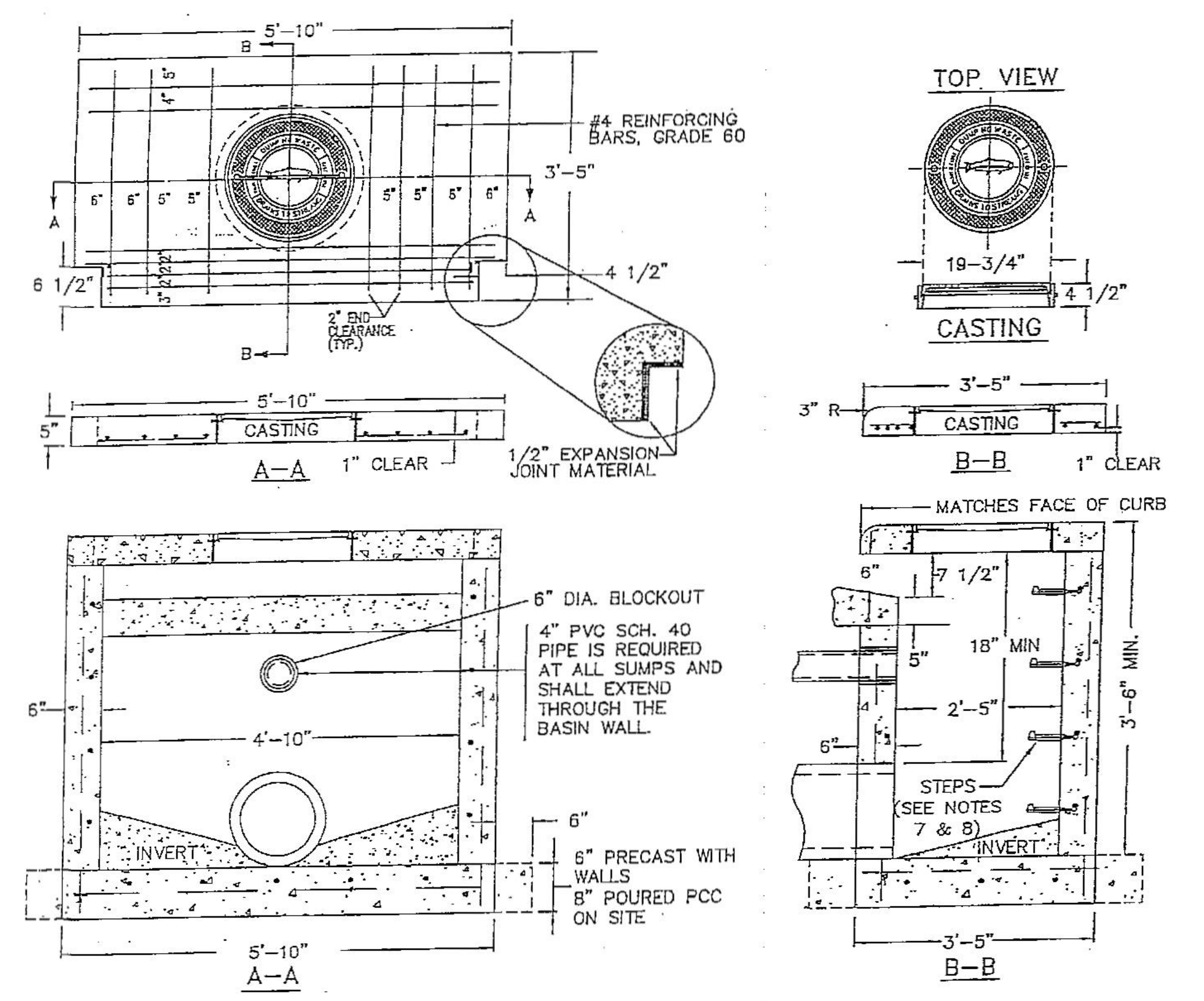
5'-10"
B
#4 REINFORCING BARS, GRADE 60
3'-5"
A
A
6 1/2"
4 1/2"
2" DIA. CLEARANCE (TYP.)
B
5'-10"
CASTING
1" CLEAR
1/2" EXPANSION JOINT MATERIAL
A-A
TOP VIEW
19-3/4"
1/2"
CASTING
3'-5"
CASTING
B-B
1" CLEAR
MATCHES FACE OF CURB
7 1/2"
18" MIN
2'-5"
3'-6" MIN.
STEPS (SEE NOTES 7 & 8)
INVERT
3'-5"
B-B
6" DIA. BLOCKOUT
4" PVC SCH. 40 PIPE IS REQUIRED AT ALL SUMPS AND SHALL EXTEND THROUGH THE BASIN WALL.
4'-10"
INVERT
6" PRECAST WITH WALLS
8" POURED PCC ON SITE
5'-10"
A-A

NOTES:

1. PRECAST DESIGN SPECIFICATIONS SHALL CONFORM TO THE LATEST ASTM C913 SPECIFICATIONS FOR "PRECAST CONCRETE WATER AND WASTE WATER STRUCTURES", NCDOT AND THE CITY OF DUNN SPECIFICATIONS.
2. PRECAST STRUCTURES SHALL BE DESIGNED FOR H-20-44 LOADING.
3. PRECAST STRUCTURE SHALL HAVE A MINIMUM CONCRETE COMPRESSIVE STRENGTH OF 4000 psi. IF THE BOTTOM CONCRETE SLAB IS POURED, IT SHALL BE A MINIMUM CONCRETE COMPRESSIVE STRENGTH OF 3000 psi AND SHALL BE POURED INTO FORMS.
4. STEEL REINFORCING DESIGN SHALL CONFORM TO THE REQUIREMENTS OF ASTM C890 SPECIFICATIONS FOR "STRUCTURAL DESIGN LOADING FOR WATER AND WASTEWATER STRUCTURES" AND SHALL UTILIZE GRADE 60 RE-BARS CONFORMING TO THE REQUIREMENTS OF ASTM A615 OR WWF CONFORMING TO THE REQUIREMENTS OF ASTM A185 OR BOTH.
5. ADDITIONAL STEEL REINFORCEMENT SHALL BE INSTALLED AT ALL OPENINGS.
6. THE FRAME AND COVER SHALL BE CAST INTO THE PCC LID AND SHALL BE MANUFACTURED AS SPECIFIED IN CITY OF DUNN STD. 800.06.
7. FOR STRUCTURE HEIGHTS OVER 3'-6", 8INSTALL STEPS ON 12" CENTERS. ALL STEPS SHALL CONFORM TO CITY OF DUNN STD. 700.03, OR AN APPROVED EQUAL.
8. GENERALLY, STEPS SHALL PLACED IN THE REAR WALL. IF THERE IS A CONFLICT WITH A PIPE ENTERING THE REAR WALL, THE STEPS SHALL BE MOVED TO A SIDE WALL WITH A CORRESPONDING SHIFT OF THE TOP, CAST IRON FRAME & COVER. THE LOCATION OF THE SHIFT STEPS AND FRAME & COVER SHALL BE APPROVED BY THE ENGINEER.
9. SEAL JOINTS WITH FLEXIBLE BUTYL RUBBER BASE CONFORMING TO FEDERAL SPECIFICATIONS SS-S-21A, ASSHTO M-198, TYPE B – BUTYL RUBBER.
10. PRECAST CATCH BASIN MINIMUM WALL THICKNESS (SOLID WALL AND BOTTOM SLAB):

HEIGHT OF STRUCTURE	WALL THICKNESS
0' TO 10'	6"
10' TO 16'	8"
OVER 16'	SPECIAL DESIGN

north carolina DUNN city of dunn

PRECAST CATCH BASIN
THROATED INLET
CITY of DUNN
NORTH CAROLINA
Department of Public Works

Revised: 1/28/11
Scale: NTS
800.05
Sheet 1 of 2

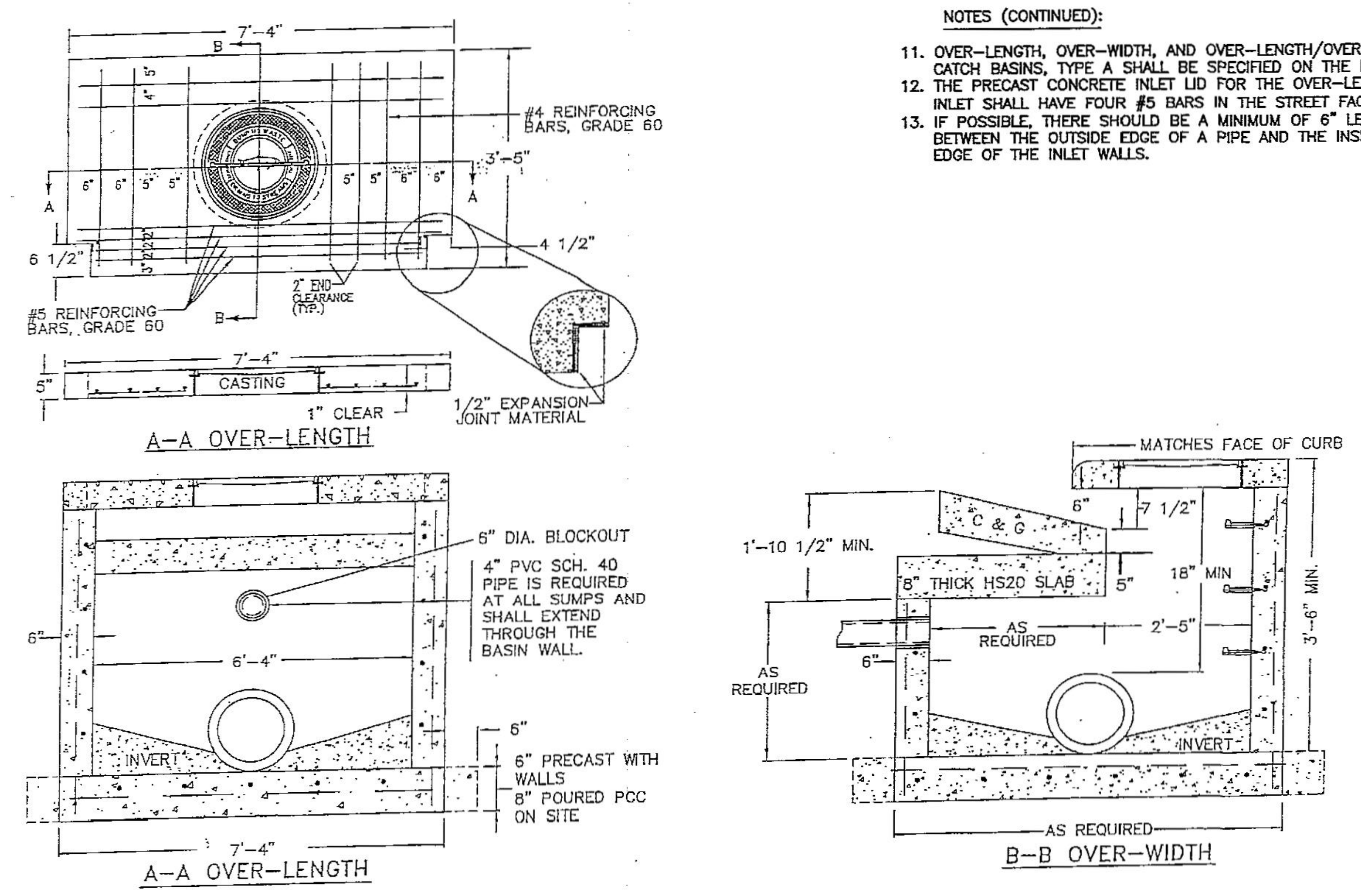
7'-4"
B
#4 REINFORCING BARS, GRADE 60
3'-5"
A
A
6 1/2"
4 1/2"
#5 REINFORCING BARS, GRADE 60
2" DIA. CLEARANCE (TYP.)
B
7'-4"
CASTING
1" CLEAR
1/2" EXPANSION JOINT MATERIAL
A-A OVER-LENGTH
6" DIA. BLOCKOUT
4" PVC SCH. 40 PIPE IS REQUIRED AT ALL SUMPS AND SHALL EXTEND THROUGH THE BASIN WALL.
6'-4"
INVERT
6" PRECAST WITH WALLS
8" POURED PCC ON SITE
7'-4"
A-A OVER-LENGTH
MATCHES FACE OF CURB
1'-10 1/2" MIN.
C & G
7 1/2"
8" THICK HS20 SLAB
18" MIN
AS REQUIRED
2'-5"
3'-6" MIN.
AS REQUIRED
INVERT
AS REQUIRED
B-B OVER-WIDTH

NOTES (CONTINUED):

11. OVER-LENGTH, OVER-WIDTH, AND OVER-LENGTH/OVER WIDTH CATCH BASINS, TYPE A SHALL BE SPECIFIED ON THE PLANS.
12. THE PRECAST CONCRETE INLET LID FOR THE OVER-LENGTH INLET SHALL HAVE FOUR #5 BARS IN THE STREET FACE.
13. IF POSSIBLE, THERE SHOULD BE A MINIMUM OF 6" LENGTH BETWEEN THE OUTSIDE EDGE OF A PIPE AND THE INSIDE EDGE OF THE INLET WALLS.

north carolina DUNN city of dunn

PRECAST CATCH BASIN
THROATED INLET
CITY of DUNN
NORTH CAROLINA
Department of Public Works

Revised: 1/28/11
Scale: NTS
800.05
Sheet 2 of 2

TC²
ENGINEERING, PLLC
201 N. Front Street
Suite M-108
Wilmington, NC 28401
910-547-5856

NO.	REVISION	DATE

SAMET HARNETT COUNTY 1

CONSTRUCTION DETAILS

ORIGINAL MAP SIZE
24" X 36"
DRAWN: BPE
CHECKED: WPC
PROJECT NO.:

SHEET:
C5.9

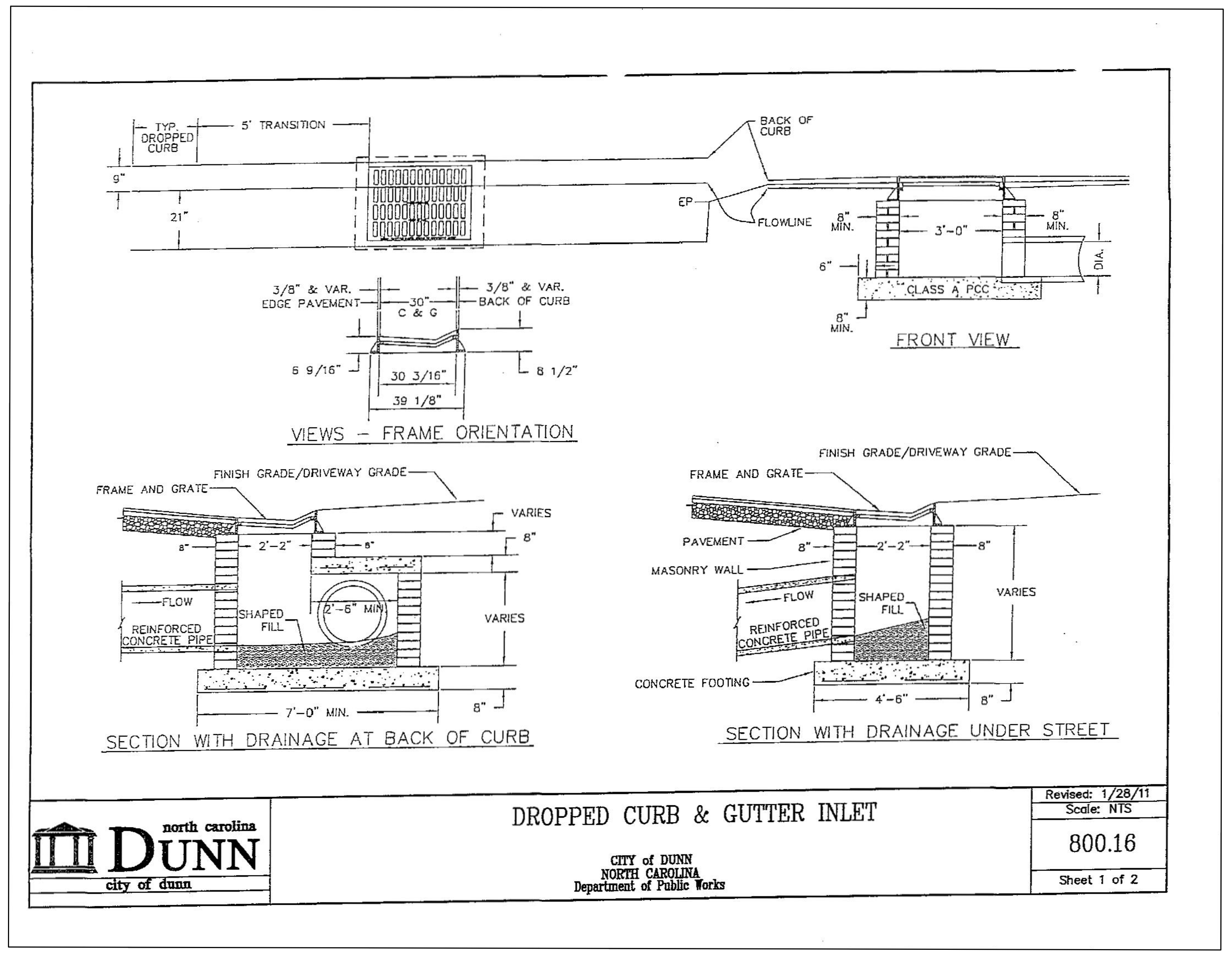
TYP. DROPPED CURB
5' TRANSITION
9"
21"
BACK OF CURB
EP
FLOWLINE
3/8" & VAR. EDGE PAVEMENT
30" C & G
3/8" & VAR. BACK OF CURB
6 9/16"
30 3/16"
39 1/8"
8 1/2"
VIEWS – FRAME ORIENTATION
8" MIN.
3'-0"
8" MIN.
6"
CLASS A PCC
DIA.
8" MIN.
FRONT VIEW
FRAME AND GRATE
FINISH GRADE/DRIVEWAY GRADE
VARIES
8"
2'-2"
8"
FLOW
REINFORCED CONCRETE PIPE
SHAPED FILL
2'-6" MIN.
VARIES
7'-0" MIN.
8"
SECTION WITH DRAINAGE AT BACK OF CURB
FINISH GRADE/DRIVEWAY GRADE
FRAME AND GRATE
PAVEMENT
MASONRY WALL
8"
2'-2"
8"
FLOW
REINFORCED CONCRETE PIPE
SHAPED FILL
VARIES
CONCRETE FOOTING
4'-6"
8"
SECTION WITH DRAINAGE UNDER STREET

north carolina
DUNN
city of dunn

DROPPED CURB & GUTTER INLET

CITY of DUNN
NORTH CAROLINA
Department of Public Works

Revised: 1/28/11
Scale: NTS
800.16
Sheet 1 of 2

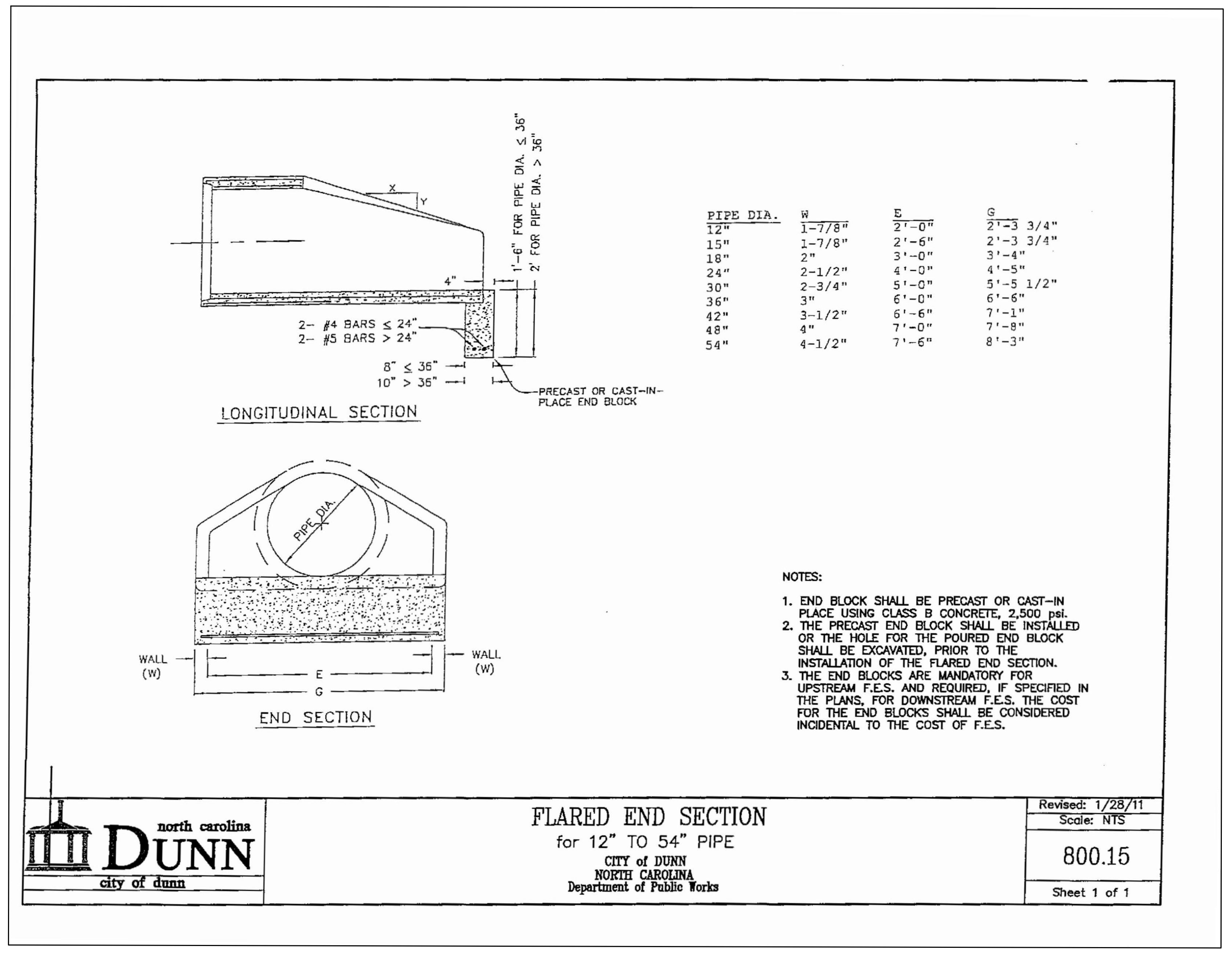
X
Y
1'-6" FOR PIPE DIA. ≤ 36"
2' FOR PIPE DIA. > 36"
4"
2– #4 BARS ≤ 24"
2– #5 BARS > 24"
8" ≤ 36"
10" > 36"
PRECAST OR CAST–IN–PLACE END BLOCK
LONGITUDINAL SECTION
PIPE DIA.
WALL (W)
E
G
WALL (W)
END SECTION

PIPE DIA.	W	E	G
12"	1-7/8"	2'-0"	2'-3 3/4"
15"	1-7/8"	2'-6"	2'-3 3/4"
18"	2"	3'-0"	3'-4"
24"	2-1/2"	4'-0"	4'-5"
30"	2-3/4"	5'-0"	5'-5 1/2"
36"	3"	6'-0"	6'-6"
42"	3-1/2"	6'-6"	7'-1"
48"	4"	7'-0"	7'-8"
54"	4-1/2"	7'-6"	8'-3"

NOTES:

1. END BLOCK SHALL BE PRECAST OR CAST–IN PLACE USING CLASS B CONCRETE, 2,500 psi.
2. THE PRECAST END BLOCK SHALL BE INSTALLED OR THE HOLE FOR THE POURED END BLOCK SHALL BE EXCAVATED, PRIOR TO THE INSTALLATION OF THE FLARED END SECTION.
3. THE END BLOCKS ARE MANDATORY FOR UPSTREAM F.E.S. AND REQUIRED, IF SPECIFIED IN THE PLANS, FOR DOWNSTREAM F.E.S. THE COST FOR THE END BLOCKS SHALL BE CONSIDERED INCIDENTAL TO THE COST OF F.E.S.

north carolina
DUNN
city of dunn

FLARED END SECTION

for 12" TO 54" PIPE

CITY of DUNN
NORTH CAROLINA
Department of Public Works

Revised: 1/28/11
Scale: NTS
800.15
Sheet 1 of 1

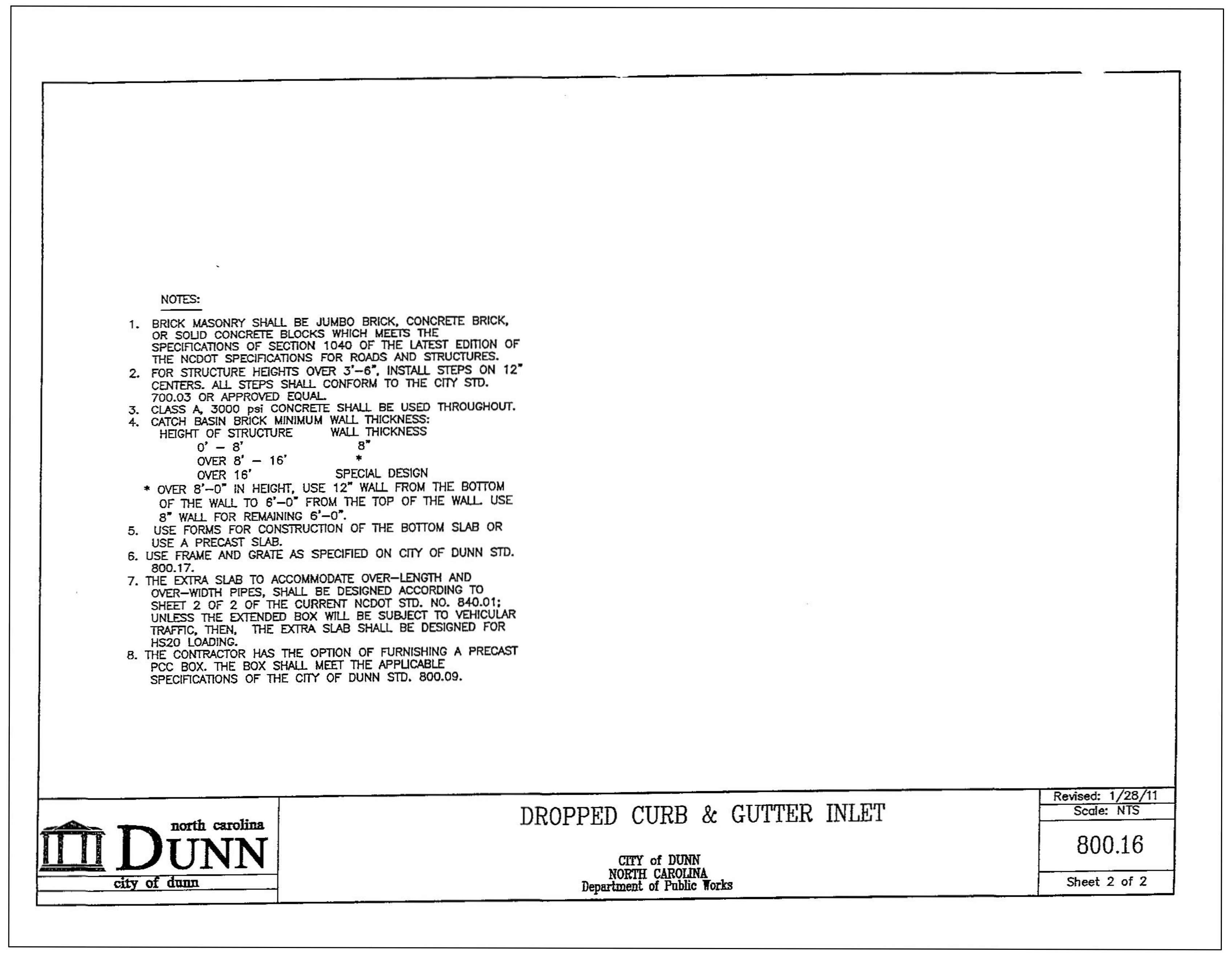
NOTES:

1. BRICK MASONRY SHALL BE JUMBO BRICK, CONCRETE BRICK, OR SOLID CONCRETE BLOCKS WHICH MEETS THE SPECIFICATIONS OF SECTION 1040 OF THE LATEST EDITION OF THE NCDOT SPECIFICATIONS FOR ROADS AND STRUCTURES.
2. FOR STRUCTURE HEIGHTS OVER 3'–6", INSTALL STEPS ON 12" CENTERS. ALL STEPS SHALL CONFORM TO THE CITY STD. 700.03 OR APPROVED EQUAL.
3. CLASS A, 3000 psi CONCRETE SHALL BE USED THROUGHOUT.
4. CATCH BASIN BRICK MINIMUM WALL THICKNESS:

HEIGHT OF STRUCTURE	WALL THICKNESS
0' – 8'	8"
OVER 8' – 16'	*
OVER 16'	SPECIAL DESIGN

* OVER 8'–0" IN HEIGHT, USE 12" WALL FROM THE BOTTOM OF THE WALL TO 6'–0" FROM THE TOP OF THE WALL. USE 8" WALL FOR REMAINING 6'–0".

5. USE FORMS FOR CONSTRUCTION OF THE BOTTOM SLAB OR USE A PRECAST SLAB.
6. USE FRAME AND GRATE AS SPECIFIED ON CITY OF DUNN STD. 800.17.
7. THE EXTRA SLAB TO ACCOMMODATE OVER–LENGTH AND OVER–WIDTH PIPES, SHALL BE DESIGNED ACCORDING TO SHEET 2 OF 2 OF THE CURRENT NCDOT STD. NO. 840.01; UNLESS THE EXTENDED BOX WILL BE SUBJECT TO VEHICULAR TRAFFIC, THEN, THE EXTRA SLAB SHALL BE DESIGNED FOR HS20 LOADING.
8. THE CONTRACTOR HAS THE OPTION OF FURNISHING A PRECAST PCC BOX. THE BOX SHALL MEET THE APPLICABLE SPECIFICATIONS OF THE CITY OF DUNN STD. 800.09.

north carolina
DUNN
city of dunn

DROPPED CURB & GUTTER INLET

CITY of DUNN
NORTH CAROLINA
Department of Public Works

Revised: 1/28/11
Scale: NTS
800.16
Sheet 2 of 2

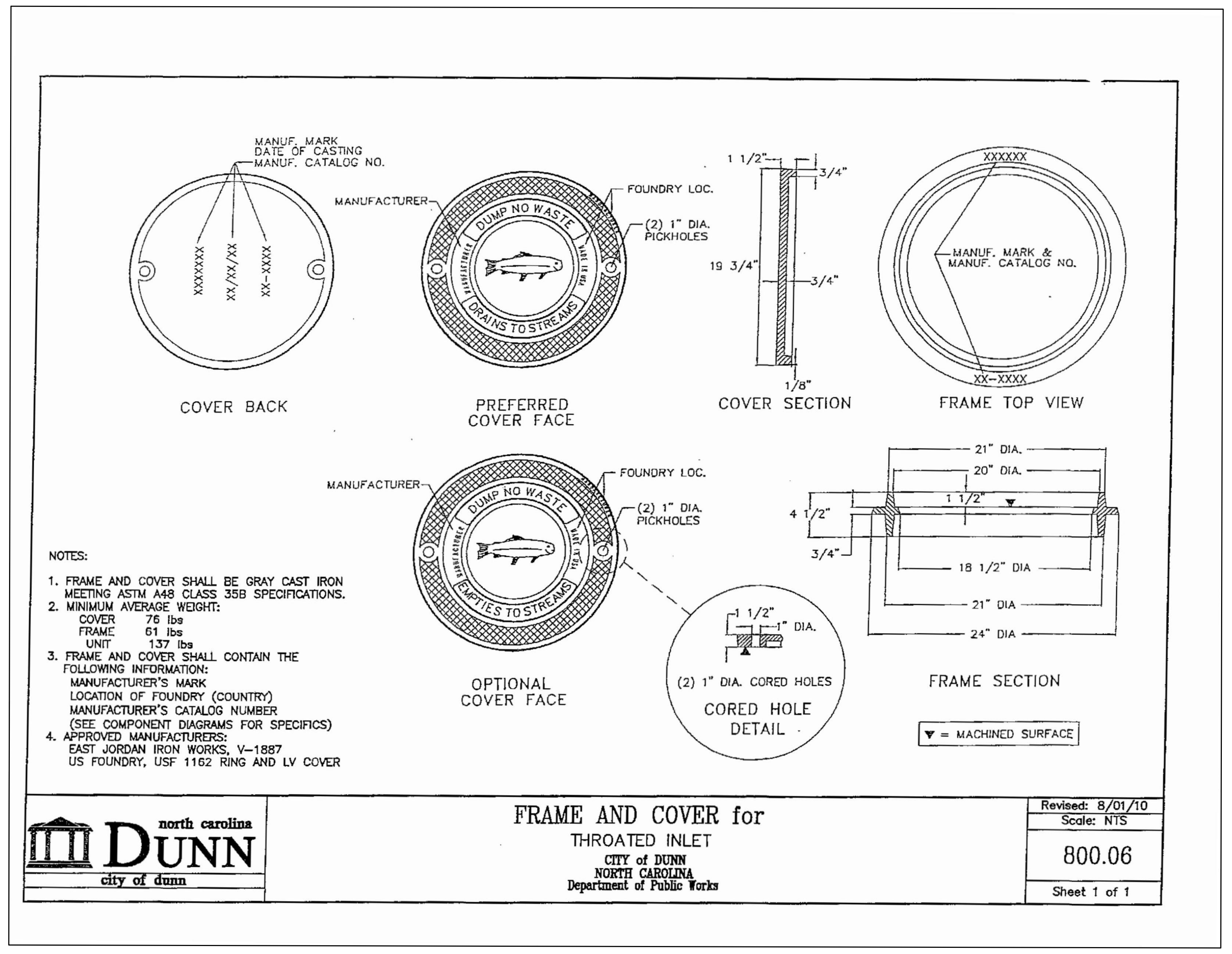
MANUF. MARK
DATE OF CASTING
MANUF. CATALOG NO.
XXXXXXX
XX/XX/XX
XX–XXXX
COVER BACK
MANUFACTURER
FOUNDRY LOC.
(2) 1" DIA. PICKHOLES
DUMP NO WASTE
DRAINS TO STREAMS
PREFERRED COVER FACE
1 1/2"
3/4"
19 3/4"
3/4"
1/8"
COVER SECTION
XXXXXX
MANUF. MARK & MANUF. CATALOG NO.
XX–XXXX
FRAME TOP VIEW
MANUFACTURER
FOUNDRY LOC.
(2) 1" DIA. PICKHOLES
DUMP NO WASTE
EMPTIES TO STREAMS
OPTIONAL COVER FACE
1 1/2"
1" DIA.
(2) 1" DIA. CORED HOLES
CORED HOLE DETAIL
21" DIA.
20" DIA.
1 1/2"
4 1/2"
3/4"
18 1/2" DIA
21" DIA
24" DIA
FRAME SECTION
▼ = MACHINED SURFACE

NOTES:

1. FRAME AND COVER SHALL BE GRAY CAST IRON MEETING ASTM A48 CLASS 35B SPECIFICATIONS.
2. MINIMUM AVERAGE WEIGHT:

COVER	76 lbs
FRAME	61 lbs
UNIT	137 lbs

3. FRAME AND COVER SHALL CONTAIN THE FOLLOWING INFORMATION:
   MANUFACTURER'S MARK
   LOCATION OF FOUNDRY (COUNTRY)
   MANUFACTURER'S CATALOG NUMBER
   (SEE COMPONENT DIAGRAMS FOR SPECIFICS)
4. APPROVED MANUFACTURERS:
   EAST JORDAN IRON WORKS, V–1887
   US FOUNDRY, USF 1162 RING AND LV COVER

north carolina
DUNN
city of dunn

FRAME AND COVER for

THROATED INLET

CITY of DUNN
NORTH CAROLINA
Department of Public Works

Revised: 8/01/10
Scale: NTS
800.06
Sheet 1 of 1

TC^2
ENGINEERING, PLLC
201 N. Front Street
Suite M-108
Wilmington, NC 28401
910-547-5856

NO.	REVISION	DATE

SAMET HARNETT COUNTY 1

CONSTRUCTION DETAILS

ORIGINAL MAP SIZE
24" X 36"
DRAWN: BPE
CHECKED: WPC
PROJECT NO.:

SHEET:
C5.10

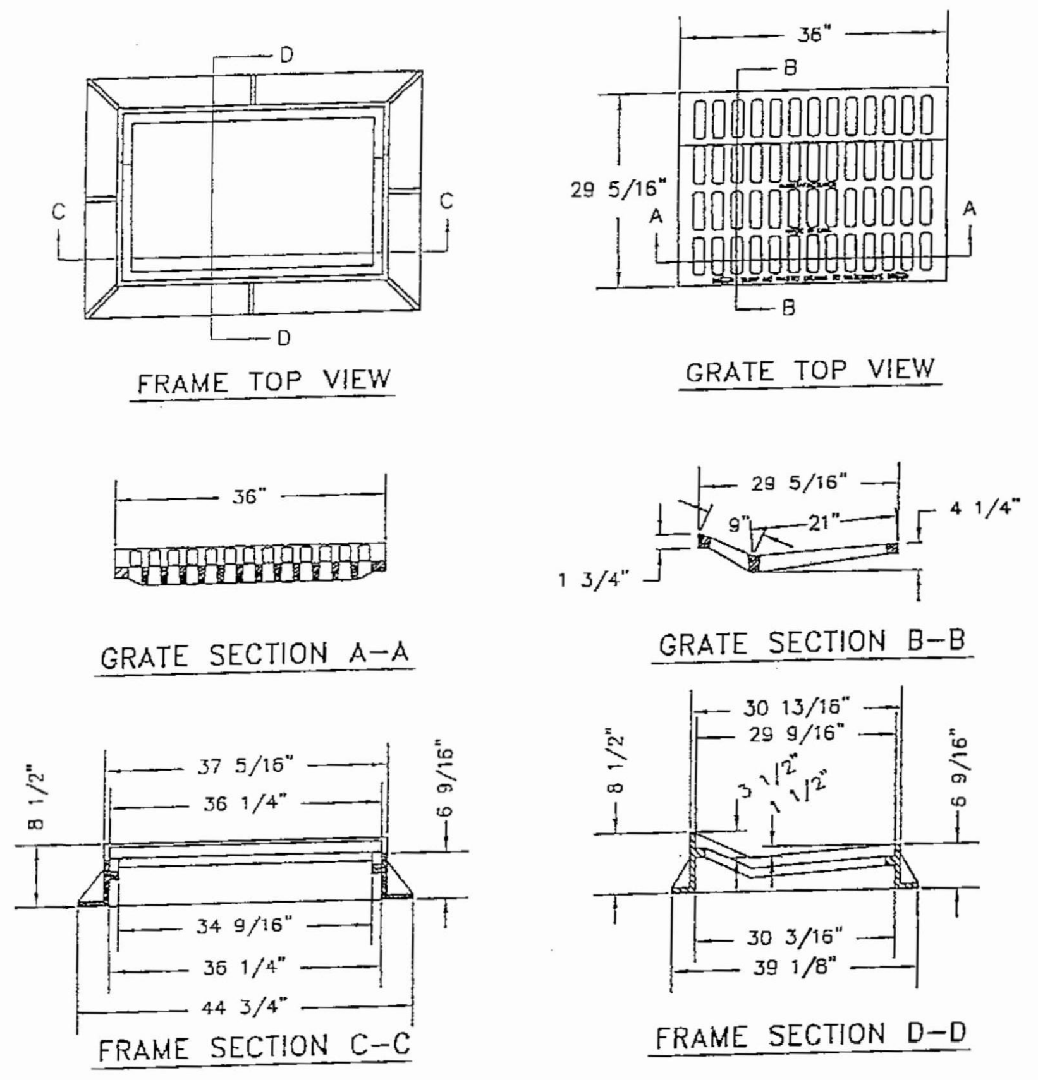
D
C
C
D
FRAME TOP VIEW
36"
B
29 5/16"
A
A
B
GRATE TOP VIEW
36"
GRATE SECTION A–A
29 5/16"
9"
21"
4 1/4"
1 3/4"
GRATE SECTION B–B
37 5/16"
36 1/4"
8 1/2"
6 9/16"
34 9/16"
36 1/4"
44 3/4"
FRAME SECTION C–C
30 13/16"
29 9/16"
8 1/2"
3 1/2"
1 1/2"
6 9/16"
30 3/16"
39 1/8"
FRAME SECTION D–D

NOTES:

1. FRAMES, GRATE AND HOOD SHALL BE GRAY CAST IRON MEETING ASTM A48 CLASS 35B SPECIFICATIONS.
2. GRATE SHALL BE SUITABLE FOR BICYCLE TRAFFIC.
3. FRAME, GRATE AND HOOD SHALL CONTAIN THE FOLLOWING INFORMATION:
   MANUFACTURER'S MARK
   LOCATION OF FOUNDRY (COUNTRY)
   MANUFACTURER'S CATALOG NUMBER
   GRATE: "DUMP NO WASTE!/ DRAINS TO WATERWAYS".
4. ESTIMATED TOTAL WEIGHT: 529 lbs.
5. APPROVED MANUFACTURERS:
   US FOUNDRY & MANUF. CORP
   ITEM NO. 8040223
   EAST JORDAN IRON WORKS, INC
   V–4510 (DIFFERENT DIMENSIONS)
6. OPEN AREA IS APPROXIMATELY 310 sq in.

north carolina
DUNN
city of dunn

FRAME & GRATE for GUTTER INLET
for DROPPED CURBING
CITY of DUNN
NORTH CAROLINA
Department of Public Works

Revised: 1/28/11
Scale: NTS
800.17
Sheet 1 of 1

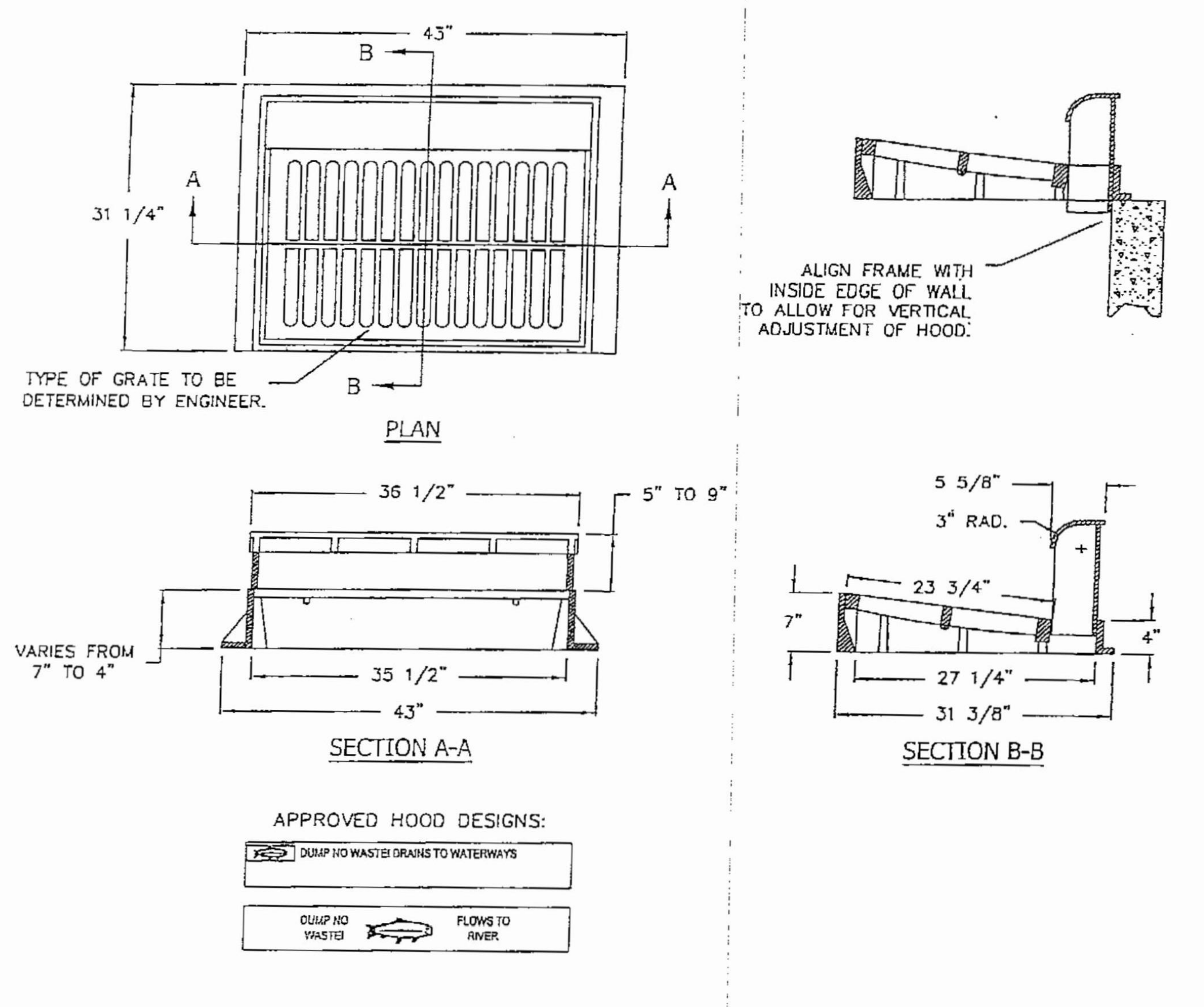
43"
B
A
A
31 1/4"
TYPE OF GRATE TO BE DETERMINED BY ENGINEER.
B
PLAN
ALIGN FRAME WITH INSIDE EDGE OF WALL TO ALLOW FOR VERTICAL ADJUSTMENT OF HOOD.
36 1/2"
5" TO 9"
VARIES FROM 7" TO 4"
35 1/2"
43"
SECTION A-A
5 5/8"
3" RAD.
23 3/4"
7"
4"
27 1/4"
31 3/8"
SECTION B-B
APPROVED HOOD DESIGNS:
DUMP NO WASTE! DRAINS TO WATERWAYS
DUMP NO WASTE!
FLOWS TO RIVER

NOTES:

1. FRAMES, GRATE AND HOOD SHALL BE GRAY CAST IRON MEETING ASTM A48 CLASS 35 SPECIFICATIONS. IT SHALL ALSO MEET THE CURRENT NCDOT STD. NO. 840.03.
2. MINIMUM AVERAGE WEIGHT:
   GRATE 220 lbs
   BACK 140 lbs
   FRAME 215 lbs
   UNIT 575 lbs
3. FRAME, GRATE AND HOOD SHALL CONTAIN THE FOLLOWING INFORMATION:
   MANUFACTURER'S MARK
   LOCATION OF FOUNDRY (COUNTRY)
   MANUFACTURER'S CATALOG NUMBER
   NCDOT STD NO.
4. APPROVED MANUFACTURERS:
   EAST JORDAN IRON WORKS
      TYPE "E" V–4066–1
      TYPE "F" V–4066–3
      TYPE "G" V–4066–4
   US FOUNDRY & MANUF. CORP
      TYPE "E" USF 5181–6420
      TYPE "F" USF 5181–6425
      TYPE "G" USF 5181–6430
   OR APPROVED EQUAL.

north carolina
DUNN
city of dunn

FRAME, GRATE & HOOD
GRATED INLET
CITY of DUNN
NORTH CAROLINA
Department of Public Works

Revised: 1/28/11
Scale: NTS
800.10
Sheet 1 of 2

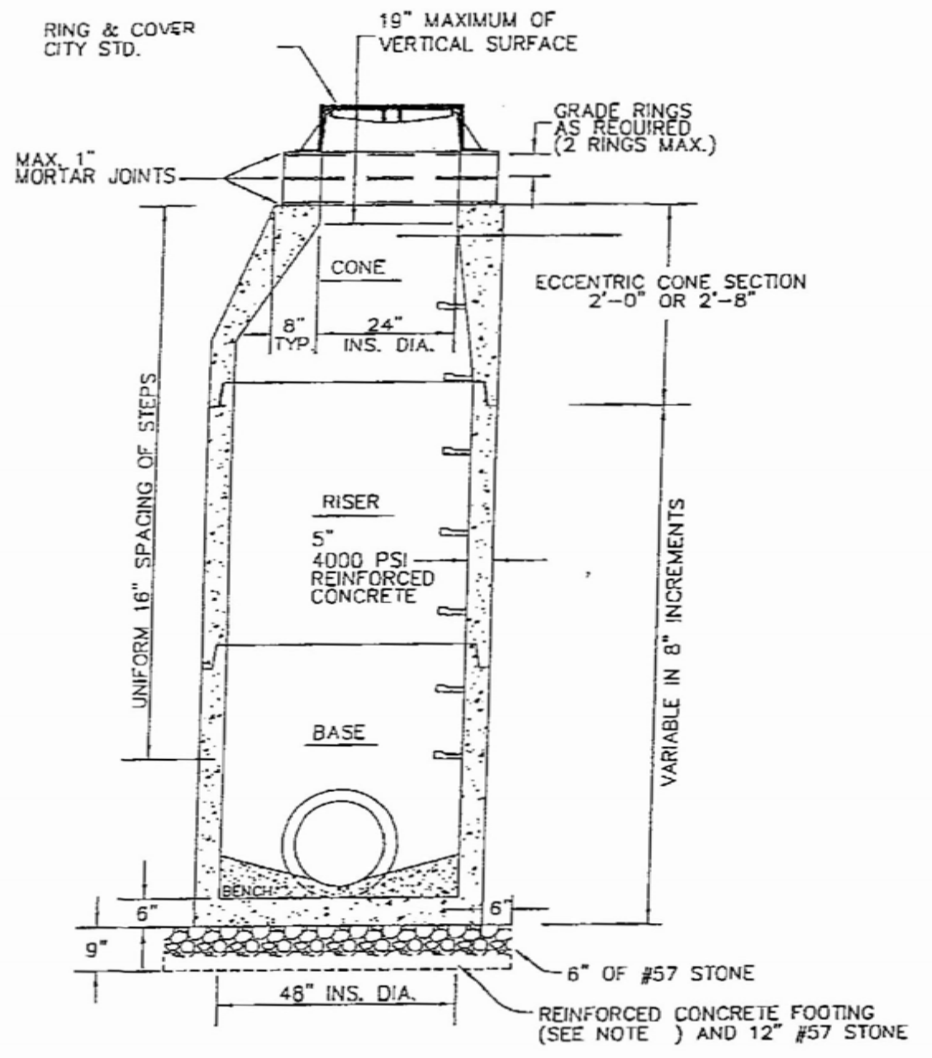
RING & COVER CITY STD.
19" MAXIMUM OF VERTICAL SURFACE
GRADE RINGS AS REQUIRED (2 RINGS MAX.)
MAX. 1" MORTAR JOINTS
CONE
8" TYP.
24" INS. DIA.
ECCENTRIC CONE SECTION 2'–0" OR 2'–8"
UNIFORM 16" SPACING OF STEPS
RISER
5"
4000 PSI
REINFORCED CONCRETE
VARIABLE IN 8" INCREMENTS
BASE
BENCH
6"
6"
9"
6" OF #57 STONE
48" INS. DIA.
REINFORCED CONCRETE FOOTING (SEE NOTE) AND 12" #57 STONE

NOTES:

1. ALL PRECAST SEWER MANHOLE SECTIONS SHALL MEET THE REQUIREMENTS OF ASTM C–478 AND AASHTO M199. THE PRECAST CONCRETE COMPRESSIVE STRENGTH SHALL BE A MINIMUM OF 4000 psi.
2. ALL MANHOLE STEPS SHALL CONFORM TO CITY STD. 700.03 OR AN APPROVED EQUAL. STEPS SHALL BE INSTALLED IN LINE WITH THE VERTICAL SIDE OF THE CORE.
3. THE MANHOLE JOINTS SHALL BE SEALED BY A BUTYL RUBBER SEALANT. THE BUTYL RUBBER SEALANT SHALL BE 1" SQUARE AND SHALL CONFORM TO ASTM C–990 AND AASHTO M–198.
4. THE LIFT INSERT AND HOLES SHALL BE ACCORDING TO CITY SPECIFICATIONS. ALL LIFT HOLES SHALL BE COMPLETELY FILLED WITH NON–SHRINK GROUT AFTER MH INSTALLATION.
5. ALL PIPE ENTRANCES AND CONNECTIONS SHALL CONFORM TO SECTION 840 OF THE CURRENT EDITION OF THE NCDOT STANDARD SPECIFICATIONS FOR ROADS AND STRUCTURES.
6. IF A FLAT TOP SECTION IS NECESSARY, IT SHALL BE APPROVED BY THE ENGINEER AND SHALL BE DESIGNED FOR HS–20 LOADING.
7. A REINFORCED CONCRETE FOOTING IS REQUIRED WHEN THE MANHOLE IS OVER 12' OR ON A POOR SOIL BASE. THE REINFORCED CONCRETE FOOTING MAY BE POURED OR PRECAST ACCORDING TO CURRENT NCDOT STD NO. 1525.01 SHEET 2 OF 2. THE CONTRACTOR HAS THE OPTION OF PROVIDING AL EXPANDED MANHOLE BASE SECTION AND SETTING THE BASE SECTION ON 12" MIN #57 STONE WITH NO EXTRA COST TO THE CITY.
8. ALL PIPE OPENINGS SHALL BE CAST TO ELEVATIONS SPECIFIED ON CONTRACT PLANS OR TO MEET JOB REQUIREMENTS.

north carolina
DUNN
city of dunn

PRECAST STORM MANHOLE – 4' DIA.
FOR STORM SEWER PIPES LESS THAN 21"
CITY of DUNN
NORTH CAROLINA
Department of Public Works

Revised: 1/28/11
Scale: NTS
800.02
Sheet 1 of 1

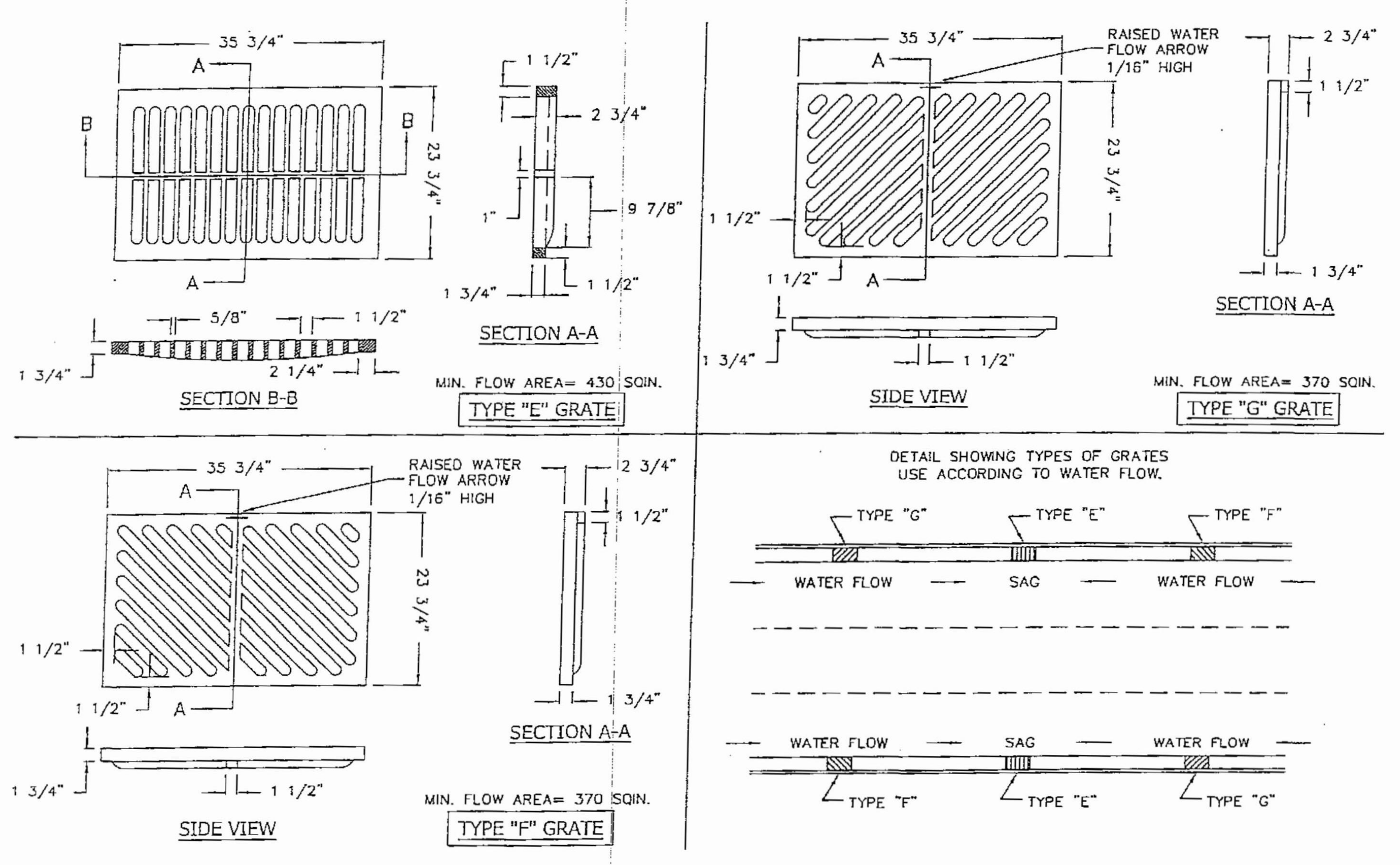
35 3/4"
A
B
B
23 3/4"
A
1 1/2"
2 3/4"
1"
9 7/8"
1 3/4"
1 1/2"
SECTION A-A
5/8"
1 1/2"
1 3/4"
2 1/4"
SECTION B-B
MIN. FLOW AREA= 430 SQIN.
TYPE "E" GRATE
35 3/4"
A
RAISED WATER FLOW ARROW 1/16" HIGH
23 3/4"
1 1/2"
1 1/2"
A
2 3/4"
1 1/2"
1 3/4"
SECTION A-A
1 3/4"
1 1/2"
SIDE VIEW
MIN. FLOW AREA= 370 SQIN.
TYPE "G" GRATE
35 3/4"
A
RAISED WATER FLOW ARROW 1/16" HIGH
23 3/4"
1 1/2"
1 1/2"
A
2 3/4"
1 1/2"
1 3/4"
SECTION A-A
1 3/4"
1 1/2"
SIDE VIEW
MIN. FLOW AREA= 370 SQIN.
TYPE "F" GRATE
DETAIL SHOWING TYPES OF GRATES USE ACCORDING TO WATER FLOW.
TYPE "G"
TYPE "E"
TYPE "F"
WATER FLOW
SAG
WATER FLOW
WATER FLOW
SAG
WATER FLOW
TYPE "F"
TYPE "E"
TYPE "G"

north carolina
DUNN
city of dunn

FRAME, GRATE & HOOD
GRATED INLET
CITY of DUNN
NORTH CAROLINA
Department of Public Works

Revised: 1/28/11
Scale: NTS
800.10
Sheet 2 of 2

TC^2
ENGINEERING, PLLC
201 N. Front Street
Suite M-108
Wilmington, NC 28401
910-547-5856

NO.	REVISION	DATE

SAMET HARNETT COUNTY 1

CONSTRUCTION DETAILS

ORIGINAL MAP SIZE
24" X 36"
DRAWN: BPE
CHECKED: WPC
PROJECT NO.:

SHEET:

C5.11

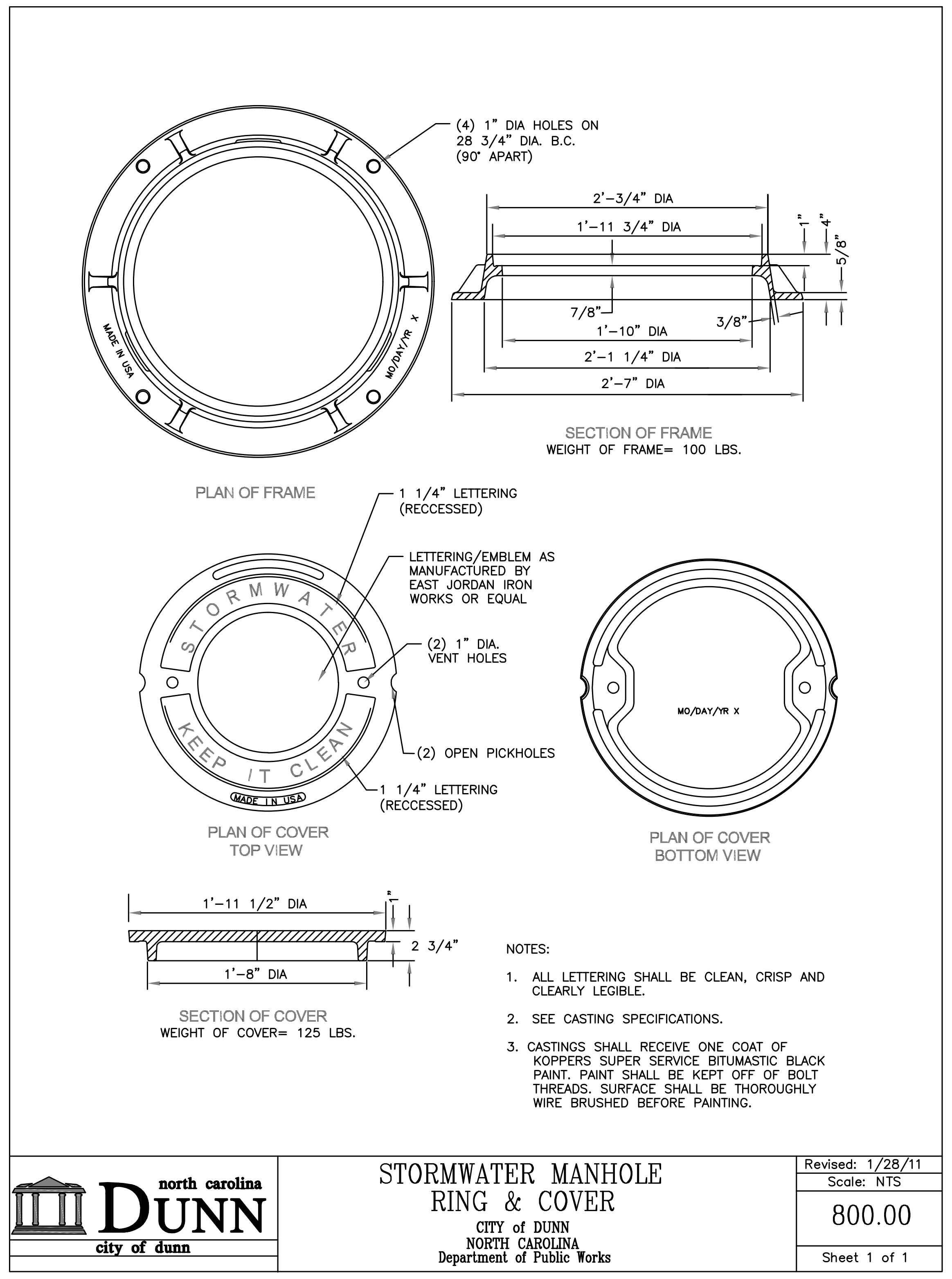
(4) 1" DIA HOLES ON
28 3/4" DIA. B.C.
(90° APART)
MADE IN USA
MO/DAY/YR X
PLAN OF FRAME
2'-3/4" DIA
1'-11 3/4" DIA
1"
4"
5/8"
7/8"
3/8"
1'-10" DIA
2'-1 1/4" DIA
2'-7" DIA
SECTION OF FRAME
WEIGHT OF FRAME= 100 LBS.
1 1/4" LETTERING
(RECCESSED)
LETTERING/EMBLEM AS MANUFACTURED BY EAST JORDAN IRON WORKS OR EQUAL
STORMWATER
(2) 1" DIA. VENT HOLES
KEEP IT CLEAN
(2) OPEN PICKHOLES
MADE IN USA
1 1/4" LETTERING
(RECCESSED)
PLAN OF COVER
TOP VIEW
MO/DAY/YR X
PLAN OF COVER
BOTTOM VIEW
1'-11 1/2" DIA
1"
2 3/4"
1'-8" DIA
SECTION OF COVER
WEIGHT OF COVER= 125 LBS.

NOTES:

1. ALL LETTERING SHALL BE CLEAN, CRISP AND CLEARLY LEGIBLE.
2. SEE CASTING SPECIFICATIONS.
3. CASTINGS SHALL RECEIVE ONE COAT OF KOPPERS SUPER SERVICE BITUMASTIC BLACK PAINT. PAINT SHALL BE KEPT OFF OF BOLT THREADS. SURFACE SHALL BE THOROUGHLY WIRE BRUSHED BEFORE PAINTING.

north carolina
DUNN
city of dunn

STORMWATER MANHOLE
RING & COVER
CITY of DUNN
NORTH CAROLINA
Department of Public Works

Revised: 1/28/11
Scale: NTS
800.00
Sheet 1 of 1

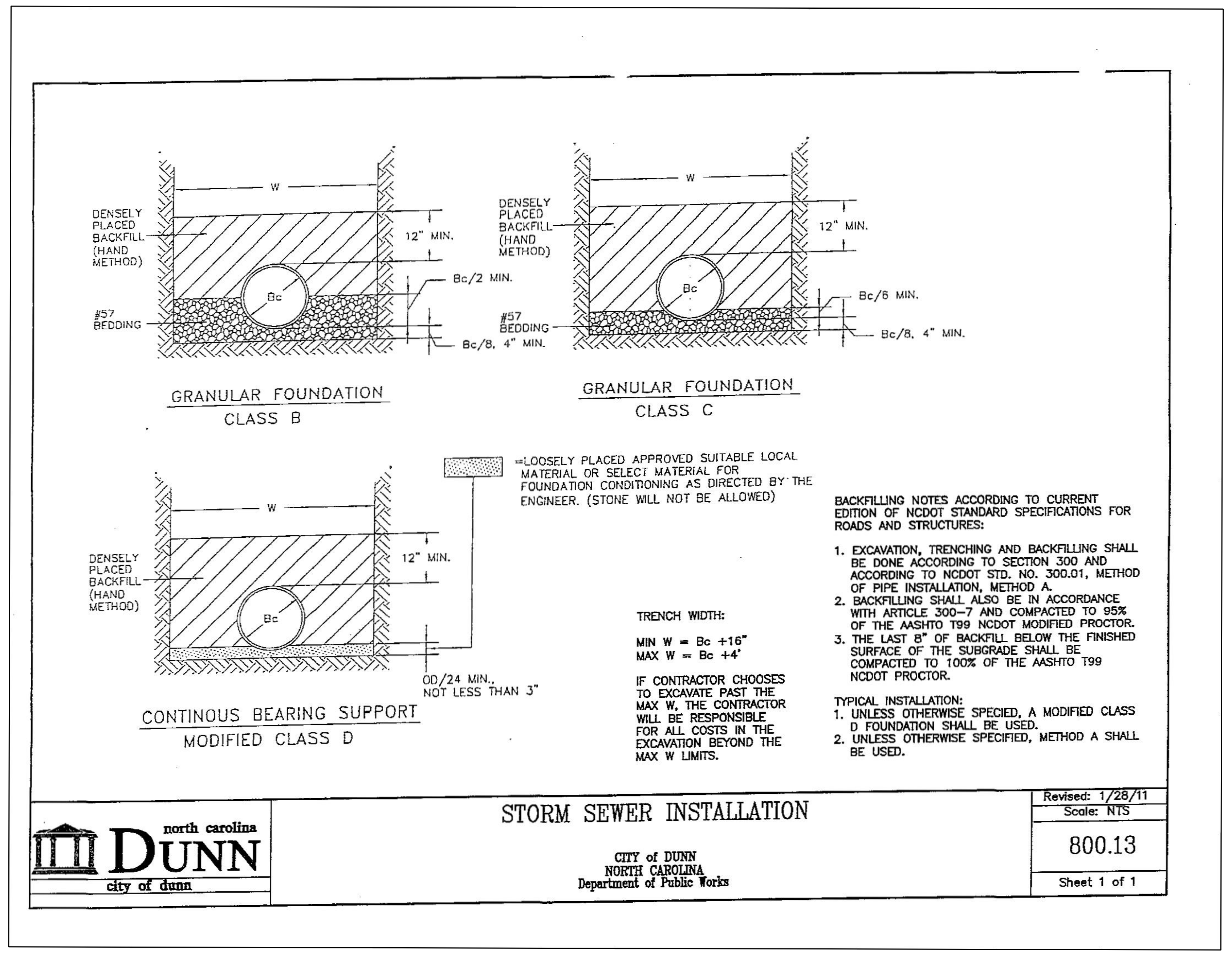
W
DENSELY PLACED BACKFILL (HAND METHOD)
12" MIN.
Bc
Bc/2 MIN.
#57 BEDDING
Bc/8, 4" MIN.
GRANULAR FOUNDATION
CLASS B
W
DENSELY PLACED BACKFILL (HAND METHOD)
12" MIN.
Bc
Bc/6 MIN.
#57 BEDDING
Bc/8, 4" MIN.
GRANULAR FOUNDATION
CLASS C
W
DENSELY PLACED BACKFILL (HAND METHOD)
12" MIN.
Bc
OD/24 MIN., NOT LESS THAN 3"
CONTINOUS BEARING SUPPORT
MODIFIED CLASS D

▨ =LOOSELY PLACED APPROVED SUITABLE LOCAL MATERIAL OR SELECT MATERIAL FOR FOUNDATION CONDITIONING AS DIRECTED BY THE ENGINEER. (STONE WILL NOT BE ALLOWED)

TRENCH WIDTH:

MIN W = Bc +16"
MAX W = Bc +4'

IF CONTRACTOR CHOOSES TO EXCAVATE PAST THE MAX W, THE CONTRACTOR WILL BE RESPONSIBLE FOR ALL COSTS IN THE EXCAVATION BEYOND THE MAX W LIMITS.

BACKFILLING NOTES ACCORDING TO CURRENT EDITION OF NCDOT STANDARD SPECIFICATIONS FOR ROADS AND STRUCTURES:

1. EXCAVATION, TRENCHING AND BACKFILLING SHALL BE DONE ACCORDING TO SECTION 300 AND ACCORDING TO NCDOT STD. NO. 300.01, METHOD OF PIPE INSTALLATION, METHOD A.
2. BACKFILLING SHALL ALSO BE IN ACCORDANCE WITH ARTICLE 300-7 AND COMPACTED TO 95% OF THE AASHTO T99 NCDOT MODIFIED PROCTOR.
3. THE LAST 8" OF BACKFILL BELOW THE FINISHED SURFACE OF THE SUBGRADE SHALL BE COMPACTED TO 100% OF THE AASHTO T99 NCDOT PROCTOR.

TYPICAL INSTALLATION:
1. UNLESS OTHERWISE SPECIED, A MODIFIED CLASS D FOUNDATION SHALL BE USED.
2. UNLESS OTHERWISE SPECIFIED, METHOD A SHALL BE USED.

north carolina
DUNN
city of dunn

STORM SEWER INSTALLATION
CITY of DUNN
NORTH CAROLINA
Department of Public Works

Revised: 1/28/11
Scale: NTS
800.13
Sheet 1 of 1

TC^2
ENGINEERING, PLLC
201 N. Front Street
Suite M-108
Wilmington, NC 28401
910-547-5856

NO.	REVISION	DATE

SAMET HARNETT COUNTY 1

CONSTRUCTION DETAILS

ORIGINAL MAP SIZE
24" X 36"
DRAWN: BPE
CHECKED: WPC
PROJECT NO.:

SHEET:
C5.12

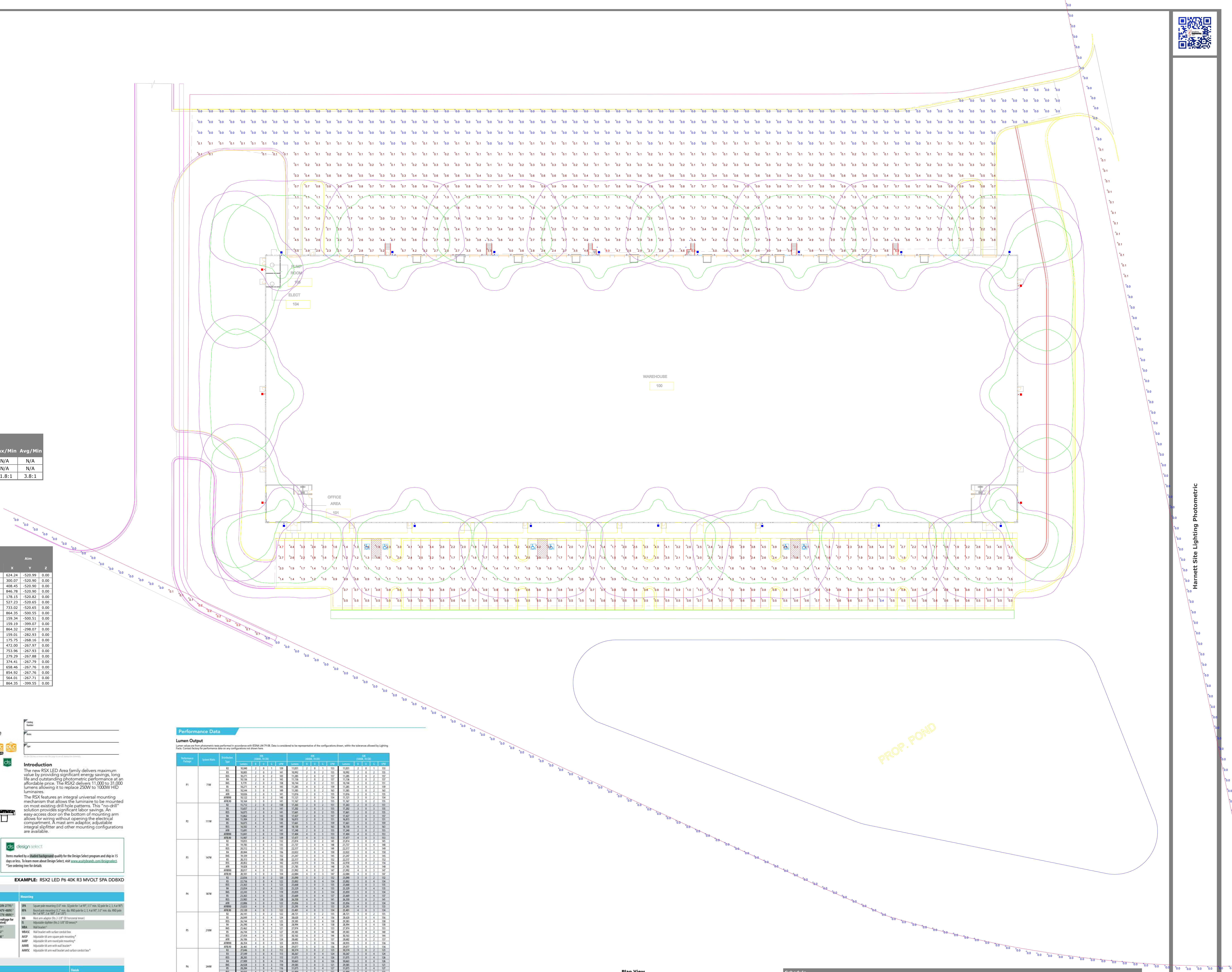

Plan View
Scale - 1" = 30ft

Statistics

Description	Symbol	Avg	Max	Min	Max/Min	Avg/Min
Boundary Line	+	0.0 fc	0.2 fc	0.0 fc	N/A	N/A
Load Dock Lot	+	1.0 fc	6.0 fc	0.0 fc	N/A	N/A
Parking Lot	+	1.5 fc	4.7 fc	0.4 fc	11.8:1	3.8:1

Luminaire Locations

		Location						Aim		
No.	Label	X	Y	Z	MH	Orientation	Tilt	X	Y	Z
1	A	624.24	-519.79	25.00	25.00	180.00	0.00	624.24	-520.99	0.00
2	A	300.07	-519.71	25.00	25.00	180.00	0.00	300.07	-520.90	0.00
3	A	408.45	-519.71	25.00	25.00	180.00	0.00	408.45	-520.90	0.00
4	A	846.78	-519.71	25.00	25.00	180.00	0.00	846.78	-520.90	0.00
5	A	178.15	-519.63	25.00	25.00	180.00	0.00	178.15	-520.82	0.00
6	A	527.23	-519.46	25.00	25.00	180.00	0.00	527.23	-520.65	0.00
7	A	733.02	-519.46	25.00	25.00	180.00	0.00	733.02	-520.65	0.00
8	B	863.16	-500.55	25.00	25.00	90.00	0.00	864.35	-500.55	0.00
9	B	160.53	-500.51	25.00	25.00	270.00	0.00	159.34	-500.51	0.00
10	B	160.39	-399.07	25.00	25.00	270.00	0.00	159.19	-399.07	0.00
12	B	863.13	-298.07	25.00	25.00	90.00	0.00	864.32	-298.07	0.00
13	B	160.21	-282.93	25.00	25.00	270.00	0.00	159.01	-282.93	0.00
14	A	175.75	-269.35	25.00	25.00	0.00	0.00	175.75	-268.16	0.00
15	A	472.00	-269.17	25.00	25.00	0.00	0.00	472.00	-267.97	0.00
16	A	753.96	-269.12	25.00	25.00	0.00	0.00	753.96	-267.93	0.00
17	A	279.29	-269.07	25.00	25.00	0.00	0.00	279.29	-267.88	0.00
18	A	374.41	-268.99	25.00	25.00	0.00	0.00	374.41	-267.79	0.00
19	A	658.46	-268.95	25.00	25.00	0.00	0.00	658.46	-267.76	0.00
20	A	854.92	-268.95	25.00	25.00	0.00	0.00	854.92	-267.76	0.00
21	A	564.01	-268.90	25.00	25.00	0.00	0.00	564.01	-267.71	0.00
22	B	863.16	-399.55	25.00	25.00	90.00	0.00	864.35	-399.55	0.00

RSX2 LED
Area Luminaire

Catalog Number

Notes

Type

Hit the Tab key or mouse over the page to see all interactive elements.

Specifications

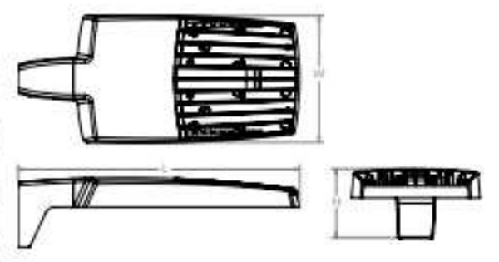

EPA (ft²@0°):	0.69 ft² (0.06 m²)
Length:	29.3" (74.4 cm) (SPA mount)
Width:	13.4" (34.0 cm)
Height:	3.0" (7.6 cm) Main Body 7.2" (18.3 cm) Arm
Weight: (SPA mount)	30.0 lbs (13.6 kg)

Introduction

The new RSX LED Area family delivers maximum value by providing significant energy savings, long life and outstanding photometric performance at an affordable price. The RSX2 delivers 11,000 to 31,000 lumens allowing it to replace 250W to 1000W HID luminaires.

The RSX features an integral universal mounting mechanism that allows the luminaire to be mounted on most existing drill hole patterns. This "no-drill" solution provides significant labor savings. An easy-access door on the bottom of mounting arm allows for wiring without opening the electrical compartment. A mast arm adaptor, adjustable integral slipfitter and other mounting configurations are available.

design select

Items marked by a shaded background qualify for the Design Select program and ship in 15 days or less. To learn more about Design Select, visit www.acuitybrands.com/designselect.
*See ordering tree for details

Design Select options indicated by this color background.

Ordering Information

EXAMPLE: RSX2 LED P6 40K R3 MVOLT SPA DDBXD

RSX2 LED

Series
- RSX2 LED

Performance Package
- P1
- P2
- P3
- P4
- P5
- P6

Color Temperature

30K	3000K
40K	4000K
50K	5000K

Distribution

R2	Type 2 Wide
R3	Type 3 Wide
R3S	Type 3 Short
R4	Type 4 Wide
R4S	Type 4 Short
R5	Type 5 Wide [1]
R5S	Type 5 Short [1]
AFR	Automotive Front Row
AFRR90	Automotive Front Row Right Rotated
AFRL90	Automotive Front Row Left Rotated

Voltage

MVOLT	(120V-277V) [2]
HVOLT	(347V-480V) [3]
XVOLT	(277V-480V) [4]

(use specific voltage for options as noted)

120 [3]	277 [3]
208 [3]	347 [3]
240 [3]	480 [3]

Mounting

SPA	Square pole mounting (3.0" min. SQ pole for 1 at 90°, 3.5" min. SQ pole for 2, 3, 4 at 90°)
RPA	Round pole mounting (3.2" min. dia. RND pole for 2, 3, 4 at 90°, 3.0" min. dia. RND pole for 1 at 90°, 2 at 180°, 3 at 120°)
MA	Mast arm adaptor (fits 2-3/8" OD horizontal tenon)
IS	Adjustable slipfitter (fits 2-3/8" OD tenon) [6]
WBA	Wall bracket [5]
WBASC	Wall bracket with surface conduit box
AASP	Adjustable tilt arm square pole mounting [6]
AARP	Adjustable tilt arm round pole mounting [6]
AAWB	Adjustable tilt arm with wall bracket [6]
AAWSC	Adjustable tilt arm wall bracket and surface conduit box [6]

Options

Shipped Installed

HS	House-side shield [7]
PE	Photocontrol, button style [8,9]
PER7	Seven-wire twist-lock receptacle only (no controls) [9,10,11]
SF	Single fuse (120, 277, 347) [3]
DF	Double fuse (208, 240, 480) [3]
SPD20KV	20KV Surge pack (10KV standard)
FAO	Field adjustable output [9]
DMG	0-10V dimming extend out back of housing for external control (control ordered separate) [9]
DS	Dual switching [9,12]

Shipped Installed

*Standalone and Networked Sensors/Controls (factory default settings, see table page 9)

NLTAIR2 PIRHN	nLight AIR generation 2 ,with Networked, Bi-Level motion/ambient sensor [9,13,14,15]
BAA	Buy America(n) Act and/or Build America Buy America Qualified
CCE	Coastal Construction [16]

*Note: NLTAIR2 PIRHN with nLight Air can be used as a standalone dimming sensor with out-of-box settings or as a wireless networked solution. See factory default settings table. Sensor coverage pattern is affected when luminaire is tilted.

Shipped Separately (requires some field assembly)

EGS	External glare shield [7]
EGFV	External glare full visor (360° around light aperture) [7]
BS	Bird spikes [17]

Finish

DDBXD	Dark Bronze
DBLXD	Black
DNAXD	Natural Aluminum
DWHXD	White
DDBTXD	Textured Dark Bronze
DBLBXD	Textured Black
DNATXD	Textured Natural Aluminum
DWHGXD	Textured White

LITHONIA LIGHTING
COMMERCIAL OUTDOOR

One Lithonia Way • Conyers, Georgia 30012 • Phone: 1-800-705-SERV (7378) • www.acuitybrands.com
© 2011-2025 Acuity Brands Lighting, Inc. All rights reserved.

Lithonia RSX2 Area LED
Rev. 01/28/25
Page 1 of 9

Performance Data

Lumen Output

Lumen values are from photometric tests performed in accordance with IESNA LM-79-08. Data is considered to be representative of the configurations shown, within the tolerances allowed by Lighting Facts. Contact factory for performance data on any configurations not shown here.

Performance Package	System Watts	Distribution. Type	30K (3000K, 70 CRI)					40K (4000K, 70 CRI)					50K (5000K, 70 CRI)				
			Lumens	B	U	G	LPW	Lumens	B	U	G	LPW	Lumens	B	U	G	LPW
P1	71W	R2	10,040	2	0	1	139	11,031	2	0	1	153	11,031	2	0	1	153
		R3	10,005	2	0	2	141	10,992	2	0	2	155	10,992	2	0	2	155
		R3S	10,271	2	0	2	143	11,285	2	0	2	157	11,285	2	0	2	157
		R4	10,136	2	0	2	143	11,136	2	0	2	157	11,136	2	0	2	157
		R4S	9,779	2	0	2	138	10,744	2	0	2	151	10,744	2	0	2	151
		R5	10,271	4	0	2	145	11,285	4	0	2	159	11,285	4	0	2	159
		R5S	10,544	3	0	1	149	11,585	3	0	2	163	11,585	3	0	2	163
		AFR	10,026	2	0	1	141	11,016	2	0	1	155	11,016	2	0	1	155
		AFRR90	10,122	3	0	2	140	11,121	3	0	2	154	11,121	3	0	2	154
		AFRL90	10,164	3	0	2	141	11,167	3	0	2	155	11,167	3	0	2	155
P2	111W	R2	15,712	2	0	2	138	17,263	2	0	2	151	17,263	2	0	2	151
		R3	15,657	2	0	3	141	17,202	3	0	3	155	17,202	3	0	3	155
		R3S	16,075	2	0	2	141	17,661	2	0	2	155	17,661	2	0	2	155
		R4	15,862	2	0	3	143	17,427	2	0	3	157	17,427	2	0	3	157
		R4S	15,304	2	0	2	138	16,815	2	0	2	151	16,815	2	0	2	151
		R5	16,075	4	0	2	145	17,661	5	0	3	159	17,661	5	0	3	159
		R5S	16,502	4	0	2	149	18,130	4	0	2	163	18,130	4	0	2	163
		AFR	15,691	2	0	2	141	17,240	2	0	2	155	17,240	2	0	2	155
		AFRR90	15,841	3	0	3	139	17,404	4	0	3	153	17,404	4	0	3	153
		AFRL90	15,907	3	0	3	139	17,477	4	0	3	153	17,477	4	0	3	153
P3	147W	R2	19,855	3	0	2	132	21,814	3	0	2	145	21,814	3	0	2	145
		R3	19,785	3	0	3	135	21,737	3	0	4	148	21,737	3	0	4	148
		R3S	20,312	3	0	3	135	22,317	3	0	3	149	22,317	3	0	3	149
		R4	20,044	3	0	3	136	22,022	3	0	4	150	22,022	3	0	4	150
		R4S	19,339	3	0	3	132	21,247	3	0	3	145	21,247	3	0	3	145
		R5	20,313	5	0	3	138	22,317	5	0	3	152	22,317	5	0	3	152
		R5S	20,852	4	0	2	142	22,910	4	0	2	156	22,910	4	0	2	156
		AFR	19,828	3	0	2	135	21,785	3	0	2	148	21,785	3	0	2	148
		AFRR90	20,017	4	0	3	133	21,992	4	0	3	147	21,992	4	0	3	147
		AFRL90	20,101	4	0	3	134	22,084	4	0	3	147	22,084	4	0	3	147
P4	187W	R2	22,836	3	0	2	120	25,090	3	0	2	132	25,090	3	0	2	132
		R3	22,756	3	0	4	122	25,002	3	0	4	134	25,002	3	0	4	134
		R3S	23,363	3	0	3	123	25,668	3	0	3	135	25,668	3	0	3	135
		R4	23,054	3	0	4	123	25,329	3	0	4	135	25,329	3	0	4	135
		R4S	22,243	3	0	3	119	25,059	3	0	3	134	25,059	3	0	3	134
		R5	23,363	5	0	3	125	25,669	5	0	4	137	25,669	5	0	4	137
		R5S	23,983	4	0	2	128	26,350	4	0	2	141	26,350	4	0	2	141
		AFR	22,806	3	0	2	122	25,056	3	0	2	134	25,056	3	0	2	134
		AFRR90	23,023	4	0	3	121	25,295	4	0	3	133	25,295	4	0	3	133
		AFRL90	23,120	4	0	3	122	25,401	4	0	3	134	25,401	4	0	3	134
P5	210W	R2	26,141	3	0	2	122	28,721	3	0	2	135	28,721	3	0	2	135
		R3	26,049	3	0	4	124	28,620	3	0	4	136	28,620	3	0	4	136
		R3S	26,744	3	0	3	125	29,383	3	0	4	138	29,383	3	0	4	138
		R4	26,390	3	0	4	126	28,994	3	0	4	138	28,994	3	0	4	138
		R4S	25,462	3	0	3	121	27,974	3	0	3	133	27,974	3	0	3	133
		R5	26,744	5	0	4	127	29,383	5	0	4	140	29,383	5	0	4	140
		R5S	27,454	4	0	2	131	30,163	4	0	2	144	30,163	4	0	2	144
		AFR	26,106	3	0	2	124	28,682	3	0	2	137	28,682	3	0	2	137
		AFRR90	26,354	4	0	3	123	28,955	5	0	3	136	28,955	5	0	3	136
		AFRL90	26,465	4	0	3	124	29,077	5	0	3	136	29,077	5	0	3	136
P6	244W	R2	27,646	3	0	2	112	30,374	3	0	2	123	30,374	3	0	2	123
		R3	27,549	3	0	4	113	30,267	3	0	4	124	30,267	3	0	4	124
		R3S	28,283	3	0	3	115	31,075	3	0	4	126	31,075	3	0	4	126
		R4	27,909	3	0	4	114	30,663	3	0	4	126	30,663	3	0	4	126
		R4S	26,928	3	0	3	110	29,585	3	0	3	121	29,585	3	0	3	121
		R5	28,284	5	0	4	116	31,075	5	0	4	127	31,075	5	0	4	127
		R5S	29,035	4	0	2	119	31,900	5	0	3	131	31,900	5	0	3	131
		AFR	27,608	3	0	2	112	30,332	3	0	2	123	30,332	3	0	2	123
		AFRR90	27,872	4	0	3	113	30,622	5	0	3	124	30,622	5	0	3	124
		AFRL90	27,989	4	0	3	113	30,751	5	0	3	125	30,751	5	0	3	125

LITHONIA LIGHTING
COMMERCIAL OUTDOOR

One Lithonia Way • Conyers, Georgia 30012 • Phone: 1-800-705-SERV (7378) • www.acuitybrands.com
© 2011-2025 Acuity Brands Lighting, Inc. All rights reserved.

Lithonia RSX2 Area LED
Rev. 01/28/25
Page 4 of 9

Schedule

Symbol	Label	Image	QTY	Catalog Number	Description	Lamp	Number Lamps	Lumens per Lamp	LLF	Wattage	Polar Plot
□	A		15	RSX2 LED P3 40K R4	RSX Area Fixture Size 2 P3 Lumen Package 4000K CCT Type R4 Distribution		1	22020	1	149.98	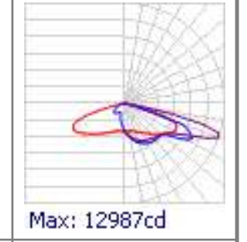 Max: 12987cd
□	B		6	RSX2 LED P3 40K R3	RSX Area Fixture Size 2 P3 Lumen Package 4000K CCT Type R3 Distribution		1	21736	1	149.98	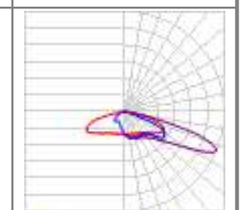 Max: 15670cd

Harnett Site Lighting Photometric

Designer

Date
04/04/2025
Scale
Not to Scale
Drawing No.

Summary

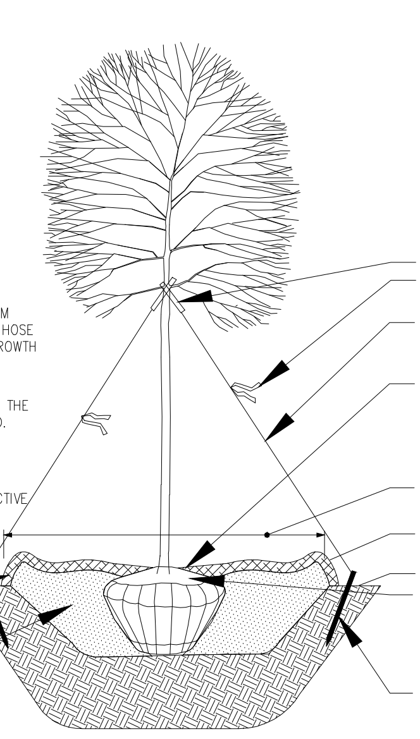

PLANTING. PRUNE ONLY CROSSOVER LIMBS, CO-DOMINANT LEADERS, AND BROKEN OR DEAD BRANCHES. SOME INTERIOR TWIGS AND LATERAL BRANCHES MAY BE PRUNED; HOWEVER, DO NOT REMOVE THE TERMINAL BUDS OF BRANCHES THAT EXTEND TO THE EDGE OF THE CROWN.

2. STAKE TREES AS SHOWN.

3. DIG PLANTING PIT TWICE AS WIDE AS THE DIAMETER OF THE TOP OF THE ROOT BALL WITH A MINIMUM PLANTING PIT DIAMETER OF 5'.

4. PLACE ROOT BALL ON UNEXCAVATED OR

5. TIGHTEN WIRE OR CABLE ONLY ENOUGH TO KEEP FROM SLIPPING. ALLOW FOR SOME TRUNK MOVEMENT. PLASTIC HOSE SHALL BE LONG ENOUGH TO ACCOMMODATE 1.5 IN. OF GROWTH AND BUFFER ALL BRANCHES FROM THE WIRE.

6. TUCK ANY LOOSE ENDS OF THE WIRE OR CABLE INTO THE WIRE WRAP SO THAT NO SHARP WIRE ENDS ARE EXPOSED.

7. INSTALL THREE GUY WIRES PER TREE, SPACED EVENLY AROUND THE TRUNK.

8. ASSURE THAT THE BEARING SURFACE OF THE PROTECTIVE COVERING OF THE WIRE OR CABLE AGAINST THE TREE TRUNK IS A MINIMUM OF 0.5 IN. REMOVE STAKES AFTER ONE YEAR.

CONSTRUCT 3" SAUCER ALL AROUND PLANTING HOLE. FLOOD WITH WATER

BACKFILL WITH PLANTING MIX (SEE PLANTING SPECIFICATIONS). TAMP SOIL AROUND ROOT BALL BASE FIRMLY WITH FOOT PRESSURE SO THAT ROOT BALL DOES

0.5 IN. DIAM. PLASTIC HOSE

PLASTIC FLAGGING OR OTHER VISUAL MARKER ON EACH WIRE.

12 GAUGE GALVANIZED WIRE OR CABLE TWIST WIRE TO TIGHTEN. TURNBUCKLES FOR TREES OVER 6 IN. CALIPER.

EACH TREE MUST BE PLANTED SUCH THAT THE TRUNK FLARE IS VISIBLE AT THE TOP OF THE ROOTBALL. TREES WHERE THE TRUNK FLARE IS NOT VISIBLE SHALL BE REJECTED. DO NOT COVER THE TOP OF THE ROOT BALL WITH SOIL. PLANT 1/8 OF ROOTBALL ABOVE FINAL GRADE.

MULCH RING 6 FOOT DIAMETER MINIMUM 8 FOOT DIAMETER PREFERRED

2 TO 3 INCHES OF MULCH. DO NOT PLACE MULCH IN CONTACT WITH TREE TRUNK.

FINAL GRADE

REMOVE ALL TWINE, ROPE, WIRE, AND BURLAP FROM TOP OF ROOT BALL. DO NOT REMOVE WIRE BASKET. BEND TOP OF WIRE BASKET DOWN INTO PLANTING PIT.

2"x2" BY 30" LONG WOOD STAKE. ALL STAKES SHALL BE DRIVEN OUTSIDE THE EDGE OF THE ROOT BALL INTO PREFERABLY UNEXCAVATED SOIL. DRIVE INTO GROUND AND EXPOSE ONLY 6"–8" OF STAKE.

CANOPY TREE PLANTING DETAIL

DECIDUOUS B&B TREE PLANTING DETAIL (TREES 3" CAL. OR LARGER)

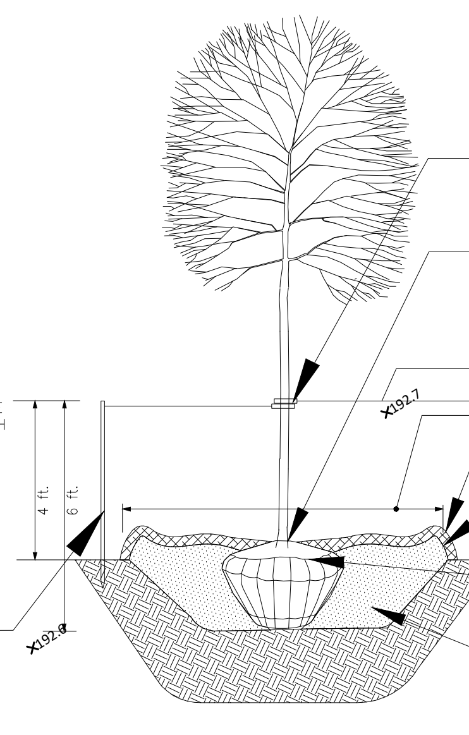

NOTES:

1. DO NOT HEAVILY PRUNE THE TREE AT PLANTING. PRUNE ONLY CROSSOVER LIMBS, CO-DOMINANT LEADERS, AND BROKEN OR DEAD BRANCHES. SOME INTERIOR TWIGS AND LATERAL BRANCHES MAY BE PRUNED; HOWEVER, DO NOT REMOVE THE TERMINAL BUDS OF BRANCHES THAT EXTEND TO THE EDGE OF THE CROWN.

2. STAKE TREES AS SHOWN.

3. DIG PLANTING PIT TWICE AS WIDE AS THE DIAMETER OF THE TOP OF THE ROOT BALL WITH A MINIMUM PLANTING PIT DIAMETER OF 5'.

4. TIGHTEN WIRE OR CABLE ONLY ENOUGH TO KEEP FROM SLIPPING. ALLOW FOR SOME TRUNK MOVEMENT. PLASTIC HOSE SHALL BE LONG ENOUGH TO ACCOMMODATE 1.5 IN. OF GROWTH AND BUFFER ALL BRANCHES FROM THE WIRE.

5. TUCK ANY LOOSE ENDS OF THE WIRE OR CABLE INTO THE WIRE WRAP SO THAT NO SHARP WIRE ENDS ARE EXPOSED.

INSTALL TWO STAKES ON OPPOSITE SIDES OF TREE, PARALLEL TO THE DIRECTION OF THE PREVAILING WINTER WINDS, UNLESS OTHERWISE DIRECTED BY LANDSCAPE ARCHITECT. ALL STAKES SHALL BE DRIVEN OUTSIDE THE EDGE OF THE ROOT BALL INTO PREFERABLY UNEXCAVATED SOIL.

0.5 IN. DIAM. PLASTIC HOSE

ASSURE THAT THE BEARING SURFACE OF THE PROTECTIVE COVERING OF THE WIRE OR CABLE AGAINST THE TREE TRUNK IS A MINIMUM OF 0.5 IN. REMOVE STAKES AFTER ONE YEAR.

EACH TREE MUST BE PLANTED SUCH THAT THE TRUNK FLARE IS VISIBLE AT THE TOP OF THE ROOTBALL. TREES WHERE THE TRUNK FLARE IS NOT VISIBLE SHALL BE REJECTED. DO NOT COVER THE TOP OF THE ROOT BALL WITH SOIL. PLANT 1/8 OF ROOTBALL ABOVE FINAL GRADE.

14 GAUGE GALVANIZED WIRE OR CABLE TWIST WIRE TO TIGHTEN.

MULCH RING 6 FOOT DIAMETER MINIMUM 8 FOOT DIAMETER PREFERRED

2 TO 3 INCHES OF MULCH. DO NOT PLACE MULCH IN CONTACT WITH TREE TRUNK.

CONSTRUCT 3" SAUCER ALL AROUND PLANTING HOLE. FLOOD WITH WATER TWICE WITHIN 24 HOURS.

FINAL GRADE

REMOVE ALL TWINE, ROPE, WIRE, AND BURLAP FROM TOP OF ROOT BALL. DO NOT REMOVE WIRE BASKET. BEND TOP OF WIRE BASKET DOWN INTO PLANTING PIT.

PLACE ROOT BALL ON UNEXCAVATED OR COMPACTED SOIL.

BACKFILL WITH PLANTING MIX (SEE PLANTING SPECIFICATIONS). TAMP SOIL AROUND ROOT BALL BASE FIRMLY WITH FOOT PRESSURE SO THAT ROOT BALL DOES NOT SHIFT.

UNDERSTORY PLANTING DETAIL

NOTES:

1. SEE PLANTING SPECIFICATIONS FOR PREPARATION OF PLANTING BED.

2. DO NOT HEAVILY PRUNE THE SHRUB AT PLANTING. PRUNE ONLY BROKEN, DAMAGED, OR Diseased BRANCHES.

3. DIG PLANTING PIT 12" WIDER THAN THE DIAMETER OF THE TOP OF THE ROOT BALL WITH A MINIMUM PLANTING PIT DIAMETER OF 18".

4. FOR B&B SHRUBS: REMOVE ALL TWINE, ROPE, AND BURLAP FROM TOP OF ROOT BALL.

5. ALL CONTAINERS SHALL BE REMOVED BEFORE INSTALLATION.

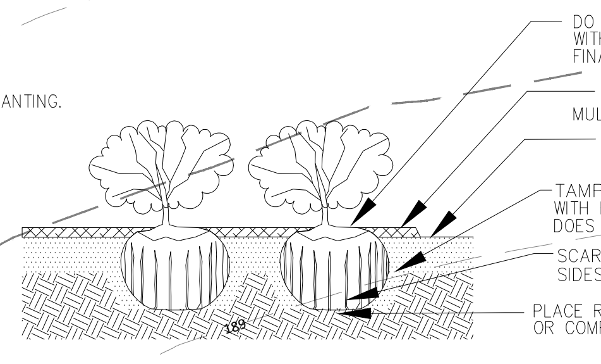

DO NOT COVER THE TOP OF THE ROOT BALL WITH SOIL. PLANT 1/8 OF ROOTBALL ABOVE FINAL GRADE.

2 TO 3 INCHES OF MULCH. DO NOT PLACE MULCH IN CONTACT WITH SHRUB TRUNK OR BRANCHES.

FINAL GRADE

TAMP SOIL AROUND BALL BASE FIRMLY WITH FOOT PRESSURE SO THE ROOT BALL DOES NOT SHIFT.

SCARIFY ROOT BALL TO A DEPTH OF 3/4" ON ALL SIDES OR BUTTERFLY CUT CONTAINER PLANTS.

PLACE ROOT BALL ON UNEXCAVATED OR COMPACTED SOIL.

SHRUB & GROUNDCOVER DETAIL

SHRUB BED PLANTING DETAIL – B&B AND CONTAINER SHRUBS

LOCATION MAP N.T.S.

NOTES: INCLUDE 12"x12"X4" RIVER ROCK AT DOWNSPOUTS OF CANOPIES.
INSTALL PINE NEEDLE MULCH AS INDICATED IN PLANTING DETAILS ABOVE
PROVIDE GRASS IN ALL OTHER DISTURBED AREAS

1. GRASS: TALL FESCUE MIX
SCHEDULE: MARCH 1–NOVEMBER 1 (FESCUE/RYE MIX NOVEMBER 1–MARCH 1)
RATE: 250 LBS. PER ACRE
LIME: GROUND LIMESTONE
RATE: 2,000 LBS. PER ACRE
FERTILIZER: 10–20–20
RATE: 500 LBS. PER ACRE
2. GRASS AREA PREPARATION: AREA SHALL BE AMENDED AND POWER TILLED TO 6" MINIMUM DEPTH. CULTIPAK OR ROLL SEED AREA.
STRAW: 1 1/2 TONS PER ACRE
TACK: 225 GAL. PER ACRE
3. MULCH: PINE NEEDLES; 3" DEPTH IN ALL PLANT BEDS.
4. SOIL REQUIREMENTS: MIX TOP SOIL, AMENDMENTS AND FERTILIZER WITH EXISTING SOIL IN A CLEAN LEVEL AREA ON SITE. PREPARE A LARGE ENOUGH QUANTITY OF PREPARED BACKFILL MATERIAL TO BACKFILL ALL TREE, SHRUB & GROUNDCOVER PLANTING AREAS AND PITS AS SHOWN ON THE PLANTING DETAILS.
5. PLANTING MIX: SHALL CONSIST OF 1 PART EXISTING SOIL, 1 PART IMPORTED TOP SOIL AND 1 PART PINE BARK SOIL CONDITIONER THOROUGHLY AND UNIFORMLY MIXED TOGETHER BLEND IN 2 POUNDS OF 10–10–10 COMMERCIAL FERTILIZER PER CUBIC YARD.
6. BED AREAS: SHALL BE RAISED 6" ABOVE GRADE WHEN COMPLETE.
7. NOTCH EDGE: ALL BED AREAS SHALL HAVE A 4" NOTCH EDGE WHEN ADJACENT TO GRASSED AREAS.
8. CONTINUOUS BEDS: ALL PLANTING BEDS SHALL BE CONTINUOUS UNDER SHRUBBERY.
9. TREE BEDS: ALL TREES SHALL HAVE A 6'–0" MIN. DIAMETER MULCH BED AT THEIR BASE.
10. WEED KILLER: APPLY PRE–EMERGENCE HERBICIDE TO ALL PLANTING BEDS, PER MANUFACTURER'S SPECIFICATIONS, PRIOR TO APPLICATION OF REQUIRED MULCH.

PLANTING SPECIFICATIONS

NORTH CAROLINA SEAL Robert J. Grill 07-07-25

(336) 312-2939
SITE PLANS
PLANNING & LANDSCAPE ARCHITECTURE
4005 BIENVENUE DRIVE, GREENSBORO, NC 27409

code	number	common name	botanical name	size	remarks
		TREES			
CM	18	CRAPE MYRTLE	LAGERSTROEMIA I. 'POWHATEN'	6'-7' TALL	MULTI-TRUNKED
LO	12	LAUREL OAK	QUERCUS LAURIFOLIA	MIN 2" CAL	
PO	14	PIN OAK	QUERCUS PALUSTRIS	MIN 2" CAL	
RM	24	RED MAPLE	ACER RUBRUM 'OCTOBER GLORY'	MIN 2" CAL	
RB	14	RIVER BIRCH	BETULA NIGRA	MIN 2" CAL	
SM	7	SOUTHERN MAGNLOIA	MAGNOLIA VIRGINIANA	MIN 2" CAL	
ZK	22	ZELKOVA	ZELKOVA SERRATA	MIN 2" CAL	
		SHRUBS			
AB	26	ABELIA	ABELIA GRANDIFLORA	MIN 30" SPREAD OR HT	
DB	28	DWARF BOXWOOD	BUXUS HARLANDI	MIN 30" SPREAD OR HT	
DYH	43	DWARF YAYPON HOLLY	ILEX VOMITORIA 'NANA'	MIN 30" SPREAD OR HT	
IH	131	INDIAN HAWTHORN	RAPHIOLEPSIS INDICA	MIN 30" SPREAD OR HT	
JP	112	JAPANESE PRIVET	LIGUSTRUM JAPONICUM	MIN 30" SPREAD OR HT	

PLANT LIST

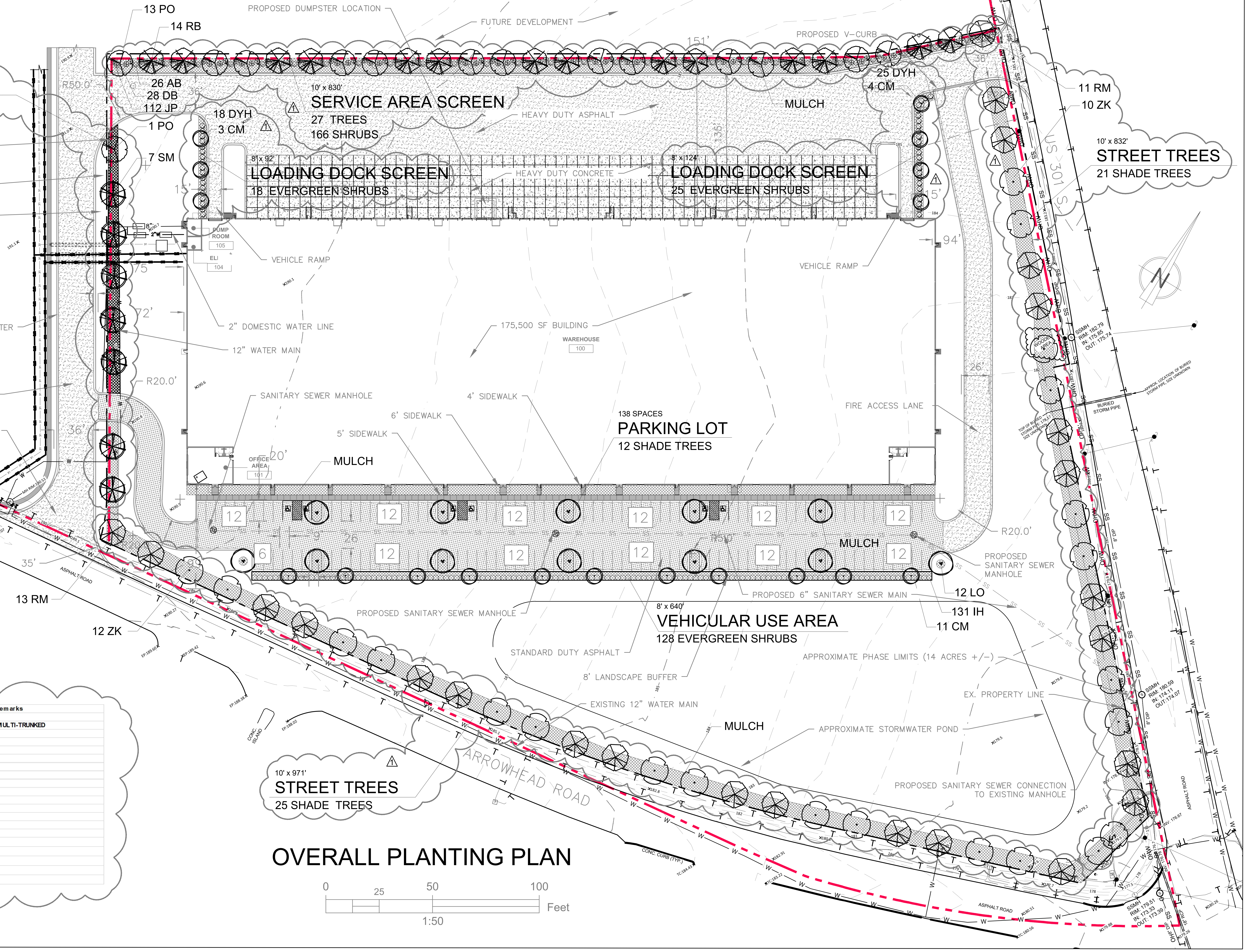
13 PO
14 RB
PROPOSED DUMPSTER LOCATION
FUTURE DEVELOPMENT
151'
PROPOSED V–CURB
10' x 320'
STREET TREES
8 SHADE TREES
APPROXIMATE PHASE LIMITS (14 ACRES +/–)
EX. PROPERTY LINE
4' SIDEWALK
24" CURB AND GUTTER
HEAVY DUTY ASPHALT
DRIVEWAY 2
PROPERTY LINE
R50.0'
26 AB
28 DB
112 JP
1 PO
7 SM
18 DYH
3 CM
10' x 830'
SERVICE AREA SCREEN
27 TREES
166 SHRUBS
HEAVY DUTY ASPHALT
25 DYH
4 CM
MULCH
8' x 92'
LOADING DOCK SCREEN
18 EVERGREEN SHRUBS
HEAVY DUTY CONCRETE
8' x 124'
LOADING DOCK SCREEN
25 EVERGREEN SHRUBS
11 RM
10 ZK
10' x 832'
STREET TREES
21 SHADE TREES
US 301 S
PUMP ROOM 105
ELI 104
VEHICLE RAMP
VEHICLE RAMP
94'
2" DOMESTIC WATER LINE
12" WATER MAIN
175,500 SF BUILDING
WAREHOUSE 100
R20.0'
36'
SANITARY SEWER MANHOLE
4' SIDEWALK
6' SIDEWALK
5' SIDEWALK
26'
FIRE ACCESS LANE
138 SPACES
PARKING LOT
12 SHADE TREES
OFFICE AREA 101
MULCH
20'
12
6
MULCH
R20.0'
PROPOSED SANITARY SEWER MANHOLE
PROPOSED 6" SANITARY SEWER MAIN
12 LO
131 IH
11 CM
35'
13 RM
12 ZK
PROPOSED SANITARY SEWER MANHOLE
8' x 640'
VEHICULAR USE AREA
128 EVERGREEN SHRUBS
STANDARD DUTY ASPHALT
8' LANDSCAPE BUFFER
APPROXIMATE PHASE LIMITS (14 ACRES +/–)
EX. PROPERTY LINE
EXISTING 12" WATER MAIN
MULCH
APPROXIMATE STORMWATER POND
PROPOSED SANITARY SEWER CONNECTION TO EXISTING MANHOLE
ARROWHEAD ROAD
ASPHALT ROAD
CONC ISLAND
CONC CURB (TYP.)
10' x 971'
STREET TREES
25 SHADE TREES
BURIED STORM PIPE
N

OVERALL PLANTING PLAN

0 25 50 100 Feet
1:50

TC²
ENGINEERING, PLLC
201 N. Front Street
Suite M-108
Wilmington, NC 28401
910-547-5856

NO.	REVISION	DATE
1	1ST REVIEW COMMENTS	7725

SAMET HARNETT COUNTY 1

LANDSCAPE PLAN

PRELIMINARY

ORIGINAL MAP SIZE 24" X 36"
DRAWN: BPE
CHECKED: WPC
PROJECT NO.:

SHEET:
LA1.0

r 070725

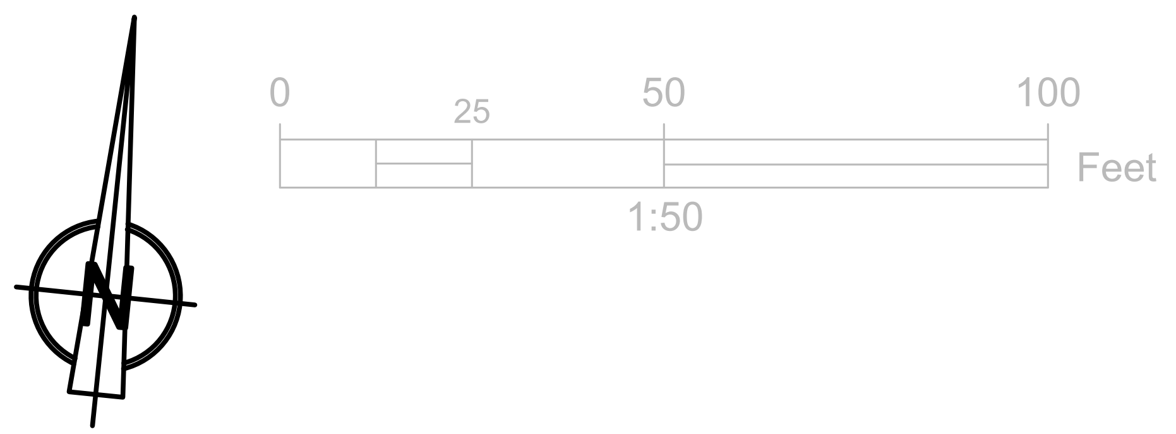
0
25
50
100
Feet
1:50
N

LEGEND

———	EXISTING STORMDRAIN PIPE
— — —	DRAIN AREA LIMITS
—404—404—	EXISTING 404 WETLAND LIMIT
⇝	EXISTING DRAINAGE PATTERN
—□—	PROPOSED SILT FENCE/LOD
🟥 - 🟥 - 🟥	PROPOSED LIMITS OF DISTURBANCE
↗	TD FLOW DIRECTON

GENERAL NOTES:

1. CONTRACTOR SHALL INSTALL SILT FENCE PRIOR BEGINNING WORK ON SITE. STONE OUTLETS SHALL BE INSTALLED ALONG LENGTH OF SILT FENCE AT AN INTERVAL OF 1 STONE OUTLET PER 500 LF OF SILT FENCE OR IN LOW AREAS ALONG THE TRAVERSE, SEE DETAIL SHEET EC2.1.
2. SILT FENCE SHALL REMAIN IN PLACE DURING CURB INSTALLATION AND PAVING OPERATIONS UNLESS THE LOCATION OF THE SILT FENCE INTERFERES WITH THE WORK.
3. CONTRACTOR TO INSTALL/CONFIRM STABILIZED CONSTRUCTION ENTRANCE PRIOR TO BEGINNING WORK ON SITE.
4. SEE SHEET C1.2 FOR SURROUNDING PROPERTY OWNER INFORMATION.
5. CONTRACTOR IS RESPONSIBLE FOR LOCATING ALL UTILITIES BOTH UNDERGROUND AND ABOVE GROUND PRIOR TO COMMENCING WORK.
6. CONTRACTOR IS LIMITED TO DISTURBING LESS THAN 1 ACRE PRIOR TO CONSTRUCTION/EXCAVATION SEDIMENT BASINS/TRAPS AND TEMPORARY DIVERSIONS.
7. CONTRACTOR TO INSTALL INLET PROTECTION PRIOR TO COMMENCING PAVING OPERATIONS.
8. UPON COMPLETION OF PAVING OPERATIONS, INLET OPENINGS SHALL BE PROTECTED WITH COI BAFFLES OR SIMILAR MEASURE TO PREVENT SEDIMENT FROM ENTERING OPEN CURB OR DROP INLET.

NOTE

WET BASIN'S UTILIZED AS PART OF A SEDMENTATION AND EROSION CONTROL PLAN SHALL BE CLEANED OUT TO INCLUDE REMOVAL OF ALL BAFFLES, SEDIMENT AND DEWATERING DEVICES. UPON COMPLETION OF CLEANOUT, POND SLOPES SHALL BE RE–ESTABLISHED AS PER THE PLANS. FOREBAYS SHALL BE INSTALLED AS SHOWN ON THIS SHEET BEFORE PONDS MAY BE UTILIZED FOR STORMWATER TREATMENT.

SEE SHEET C2.2 FOR POND CROSS SECTION AND STAGE STORAGE TABLES

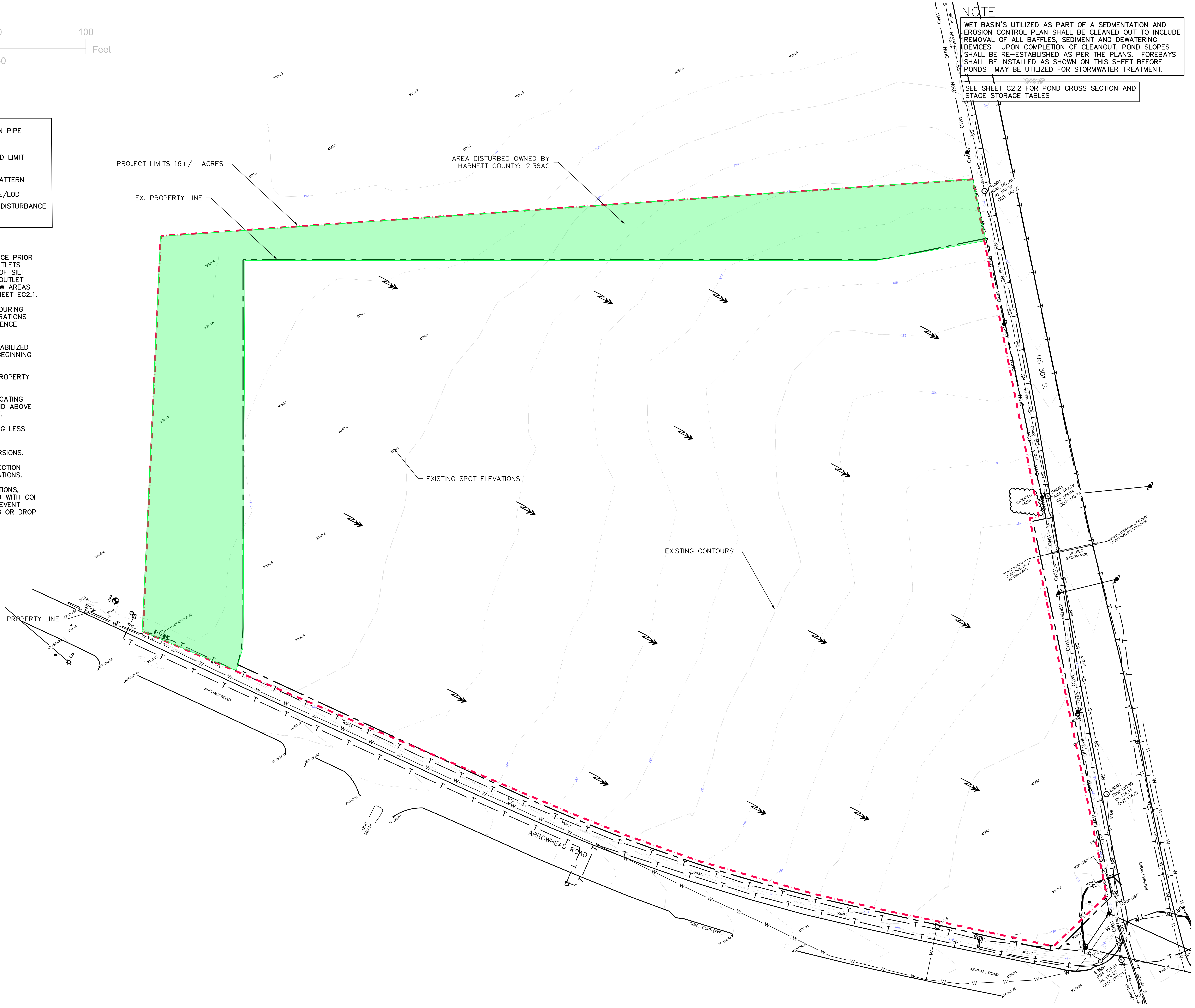
PROJECT LIMITS 16+/- ACRES
EX. PROPERTY LINE
AREA DISTURBED OWNED BY HARNETT COUNTY: 2.36AC
EXISTING SPOT ELEVATIONS
EXISTING CONTOURS
PROPERTY LINE
US 301 S
ARROWHEAD ROAD
ASPHALT ROAD
CONC. CURB (TYP.)
CONC. ISLAND
WOODED AREA
BURIED STORM PIPE
SSMH
OHW
SS
W
T
8" DIP
190

TC^2
ENGINEERING, PLLC
201 N. Front Street
Suite M-108
Wilmington, NC 28401
910-547-5856

NO.	REVISION	DATE
1	REVISED PER DEQ COMMENT	7/17/25

SAMET HARNETT COUNTY 1

EROSION CONTROL SHEET EXISTING CONDITIONS

ORIGINAL MAP SIZE
24" X 36"
DRAWN: BPE
CHECKED: WPC
PROJECT NO.:

SHEET:
EC1.0

LEGEND

- EXISTING STORMDRAIN PIPE
- DRAIN AREA LIMITS
- EXISTING DRAINAGE PATTERN
- PROPOSED SILT FENCE/LOD
- PROPOSED LIMITS OF DISTURBANCE
- TD FLOW DIRECTON

GENERAL NOTES:

1. CONTRACTOR SHALL INSTALL SILT FENCE PRIOR BEGINNING WORK ON SITE. STONE OUTLETS SHALL BE INSTALLED ALONG LENGTH OF SILT FENCE AT AN INTERVAL OF 1 STONE OUTLET PER 500 LF OF SILT FENCE OR IN LOW AREAS ALONG THE TRAVERSE, SEE DETAIL SHEET EC2.1.
2. SILT FENCE SHALL REMAIN IN PLACE DURING CURB INSTALLATION AND PAVING OPERATIONS UNLESS THE LOCATION OF THE SILT FENCE INTERFERES WITH THE WORK.
3. CONTRACTOR TO INSTALL/CONFIRM STABILIZED CONSTRUCTION ENTRANCE PRIOR TO BEGINNING WORK ON SITE.
4. SEE SHEET C1.2 FOR SURROUNDING PROPERTY OWNER INFORMATION.
5. CONTRACTOR IS RESPONSIBLE FOR LOCATING ALL UTILITIES BOTH UNDERGROUND AND ABOVE GROUND PRIOR TO COMMENCING WORK.
6. CONTRACTOR IS LIMITED TO DISTURBING LESS THAN 1 ACRE PRIOR TO CONSTRUCTION/EXCAVATION SEDIMENT BASINS/TRAPS AND TEMPORARY DIVERSIONS.
7. CONTRACTOR TO INSTALL INLET PROTECTION PRIOR TO COMMENCING PAVING OPERATIONS.
8. UPON COMPLETION OF PAVING OPERATIONS, INLET OPENINGS SHALL BE PROTECTED WITH COI BAFFLES OR SIMILAR MEASURE TO PREVENT SEDIMENT FROM ENTERING OPEN CURB OR DROP INLET.

SEQUENCE OF CONSTRUCTION PHASE 1

1. INSTALL STABILIZED CONSTRUCTION ENTRANCES AS SHOWN.
2. INSTALL SILT FENCE AS SHOWN
3. INSTALL SEDIMENT BASIN INCLUDING BAFFLES, SLOPE DRAINS, OUTLET STRUCTURE AND SKIMMER PER DETAIL ON SHEET EC 2.1.
4. INSTALL TEMPORARY DIVERSIONS A, B, C AND D TO DIRECT RUN-OFF TO BASIN.
5. BEGIN CLEARING AND GRADING WORK ON SITE.
6. IMMEDIATELY STABILIZE AREAS THAT WILL NOT BE IMPACTED WITH FUTURE CONSTRUCTION WITH TEMPORARY SEEDING AND MULCHING.
7. IMMEDIATELY INSTALL TEMPORARY SEED AND MULCH TO STABILIZE DISTURBED AREAS AS MEASURES ARE REMOVED AS PART OF PHASE 1 CLEARING/GRADING.
8. INSPECT SILT FENCE, AND STABILIZED CONSTRUCTION ENTRANCES.

SEE SHEETS C5.1–C5.11 FOR STANDARD DETAILS

NOTE

WET BASIN'S UTILIZED AS PART OF A SEDMENTATION AND EROSION CONTROL PLAN SHALL BE CLEANED OUT TO INCLUDE REMOVAL OF ALL BAFFLES, SEDIMENT AND DEWATERING DEVICES. UPON COMPLETION OF CLEANOUT, POND SLOPES SHALL BE RE–ESTABLISHED AS PER THE PLANS. FOREBAYS SHALL BE INSTALLED AS SHOWN ON THIS SHEET BEFORE PONDS MAY BE UTILIZED FOR STORMWATER TREATMENT.

SEE SHEET C2.2 FOR POND CROSS SECTION AND STAGE STORAGE TABLES

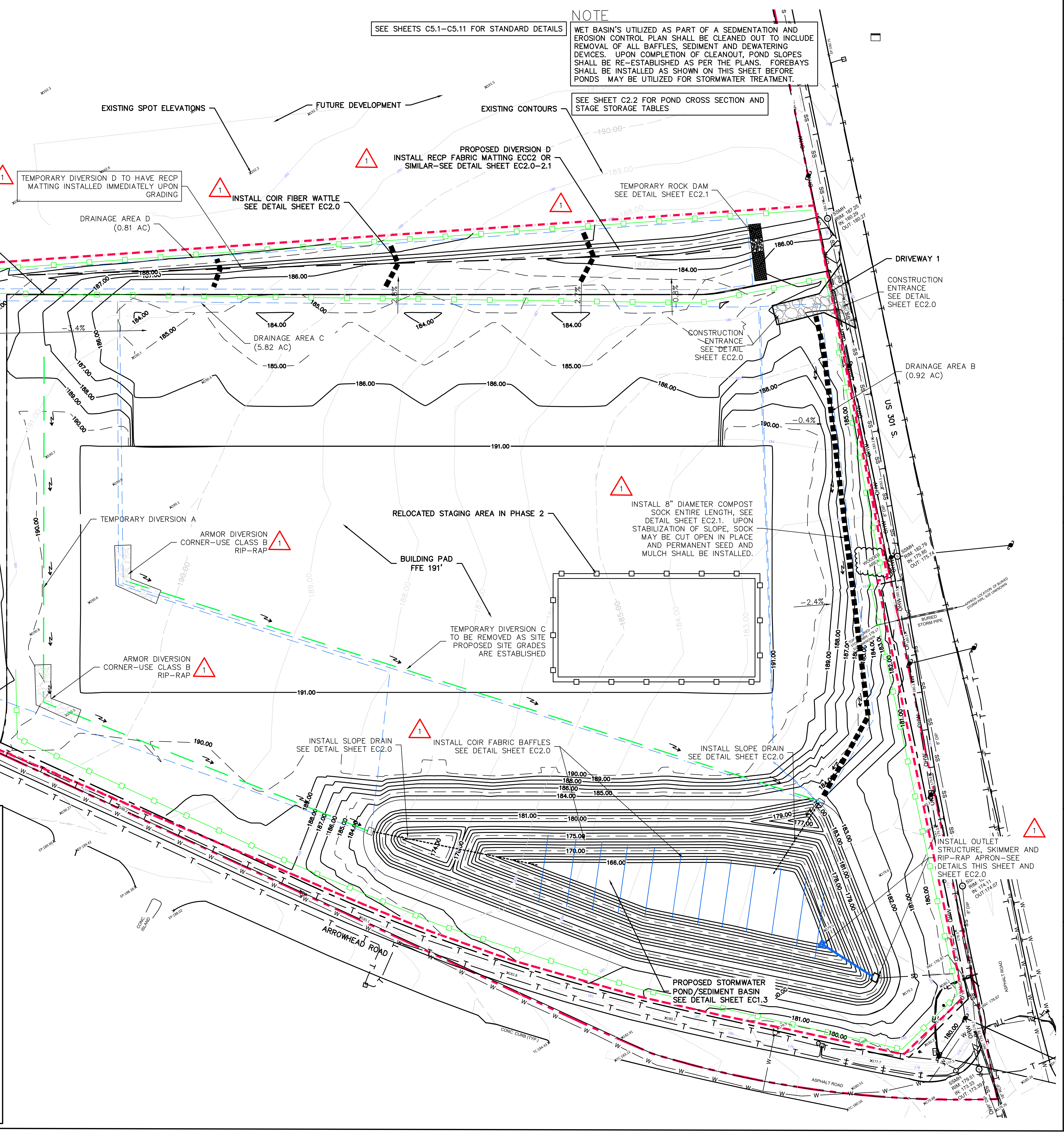
0 25 50 100 Feet
1:50
N
EXISTING SPOT ELEVATIONS
FUTURE DEVELOPMENT
EXISTING CONTOURS
PROPOSED DIVERSION D INSTALL RECP FABRIC MATTING ECC2 OR SIMILAR–SEE DETAIL SHEET EC2.0–2.1
TEMPORARY DIVERSION D TO HAVE RECP MATTING INSTALLED IMMEDIATELY UPON GRADING
INSTALL COIR FIBER WATTLE SEE DETAIL SHEET EC2.0
TEMPORARY ROCK DAM SEE DETAIL SHEET EC2.1
DRAINAGE AREA D (0.81 AC)
EX. PROPERTY LINE
APPROXIMATE PHASE LIMITS (16 ACRES +/-)
DRAINAGE AREA A (2.75 AC)
DRAINAGE AREA C (5.82 AC)
DRAINAGE AREA B (0.92 AC)
DRIVEWAY 1
CONSTRUCTION ENTRANCE SEE DETAIL SHEET EC2.0
CONSTRUCTION ENTRANCE SEE DETAIL SHEET EC2.0
US 301 S.
SSMH RIM: 187.25 IN: 180.29 OUT: 180.27
SSMH RIM: 182.79 IN: 175.89 OUT: 175.74
INSTALL 8" DIAMETER COMPOST SOCK ENTIRE LENGTH, SEE DETAIL SHEET EC2.1. UPON STABILIZATION OF SLOPE, SOCK MAY BE CUT OPEN IN PLACE AND PERMANENT SEED AND MULCH SHALL BE INSTALLED.
RELOCATED STAGING AREA IN PHASE 2
BUILDING PAD FFE 191'
TEMPORARY DIVERSION A
ARMOR DIVERSION CORNER–USE CLASS B RIP–RAP
ARMOR DIVERSION CORNER–USE CLASS B RIP–RAP
TEMPORARY DIVERSION C TO BE REMOVED AS SITE PROPOSED SITE GRADES ARE ESTABLISHED
CONSTRUCTION ENTRANCE SEE DETAIL SHEET EC2.0
DRIVEWAY 2
PROPERTY LINE
INSTALL SLOPE DRAIN SEE DETAIL SHEET EC2.0
INSTALL COIR FABRIC BAFFLES SEE DETAIL SHEET EC2.0
INSTALL SLOPE DRAIN SEE DETAIL SHEET EC2.0
INSTALL OUTLET STRUCTURE, SKIMMER AND RIP–RAP APRON–SEE DETAILS THIS SHEET AND SHEET EC2.0
PROPOSED STORMWATER POND/SEDIMENT BASIN SEE DETAIL SHEET EC1.3
ARROWHEAD ROAD
ASPHALT ROAD
CONC. CURB (TYP.)
SSMH RIM: 179.51 IN: 173.33 OUT: 173.39
BURIED STORM PIPE
191.00
190.00
186.00
185.00
184.00
181.00
180.00
179.00
175.00
170.00
166.00
–3.4%
–2.4%
–0.4%
1

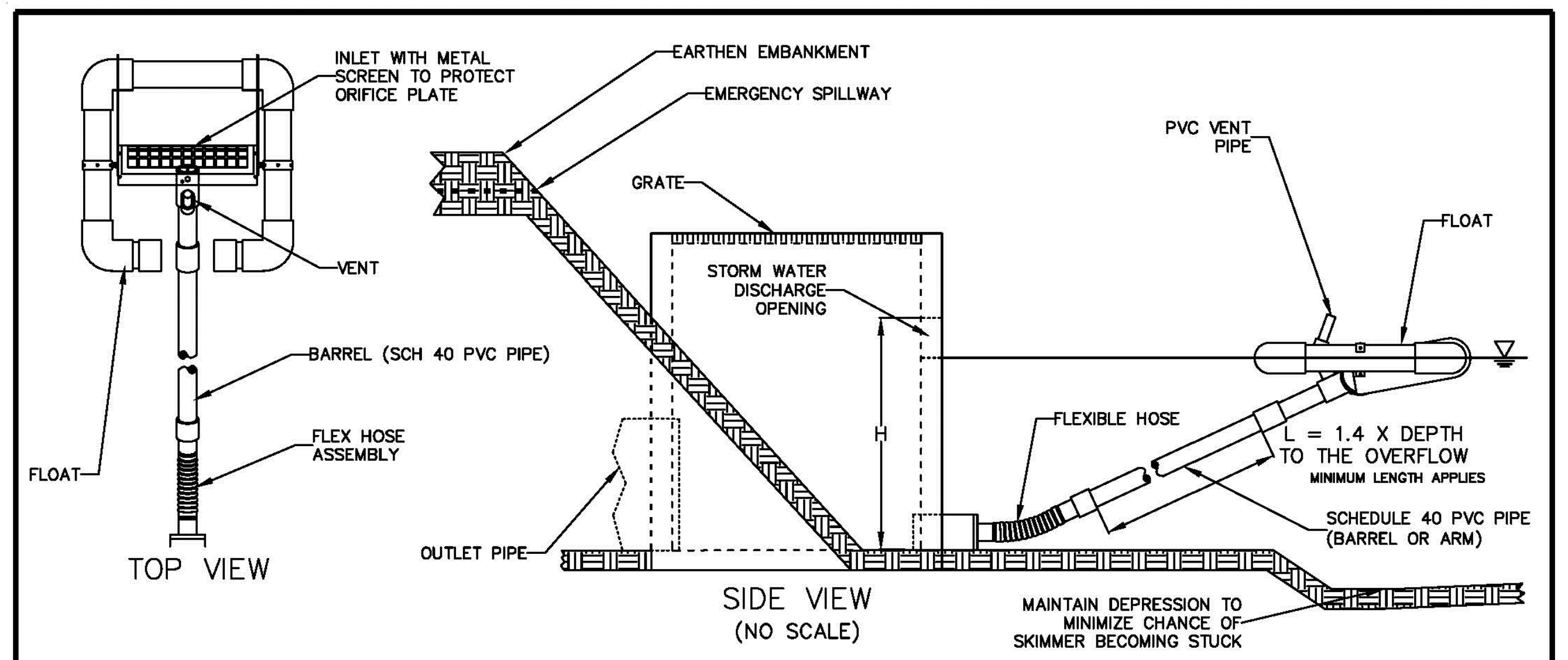
INLET WITH METAL SCREEN TO PROTECT ORIFICE PLATE
VENT
BARREL (SCH 40 PVC PIPE)
FLEX HOSE ASSEMBLY
FLOAT
TOP VIEW
EARTHEN EMBANKMENT
EMERGENCY SPILLWAY
GRATE
STORM WATER DISCHARGE OPENING
H
OUTLET PIPE
PVC VENT PIPE
FLOAT
FLEXIBLE HOSE
L = 1.4 X DEPTH TO THE OVERFLOW
MINIMUM LENGTH APPLIES
SCHEDULE 40 PVC PIPE (BARREL OR ARM)
MAINTAIN DEPRESSION TO MINIMIZE CHANCE OF SKIMMER BECOMING STUCK
SIDE VIEW
(NO SCALE)

SAMET-HARNETT COUNTY PHASE 1					
Name	Skimmer Size	Orifice Dia.	Orifice RAD	Required Basin Volume	Days to Drain
Basin A	2"	1 15/16"	15/16"	9828	3

GENERAL NOTES:

1. FAIRCLOTH SKIMMER® FLOW RATES WERE USED AS THE BASIS OF DESIGN WHEN DETERMINING DRAINAGE CALCULATIONS. UTILIZING A PRODUCT FROM AN ALTERNATIVE MANUFACTURER WILL CREATE A SIGNIFICANT DEVIATION TO THE DESIGN AND MUST BE APPROVED AND RECALCULATED BY THE DESIGN ENGINEER.
2. PROPER ORIFICE OPENING MUST BE SELECTED TO ENSURE POND DRAINS IN CORRECT AMOUNT OF TIME. MODIFICATIONS MAY BE REQUIRED IF FIELD CONDITIONS WARRANT A CHANGE.
3. BARREL PIPE SHOULD BE 1.4 X DEPTH OF THE BASIN TO ENSURE PROPER FUNCTION.

DRAWN BY T. R. EVANS 08/24

FAIRCLOTH SKIMMER® DISCHARGE SYSTEM WITH OUTLET STRUCTURE

FAIRCLOTH SKIMMER
WWW.FAIRCLOTHSKIMMER.COM
TELEPHONE: (919) 732–1244
FAX: (919) 732–1266
EMAIL: SALES@FAIRCLOTHSKIMMER.COM

TC²
ENGINEERING, PLLC
201 N. Front Street
Suite M-108
Wilmington, NC 28401
910-547-5856

NO.	REVISION	DATE
1	REVISED PER DEQ COMMENT	7/17/25

SAMET HARNETT COUNTY 1

EROSION CONTROL SHEET PHASE–1

ORIGINAL MAP SIZE
24" X 36"
DRAWN: BPE
CHECKED: WPC
PROJECT NO.:

SHEET:
EC1.1

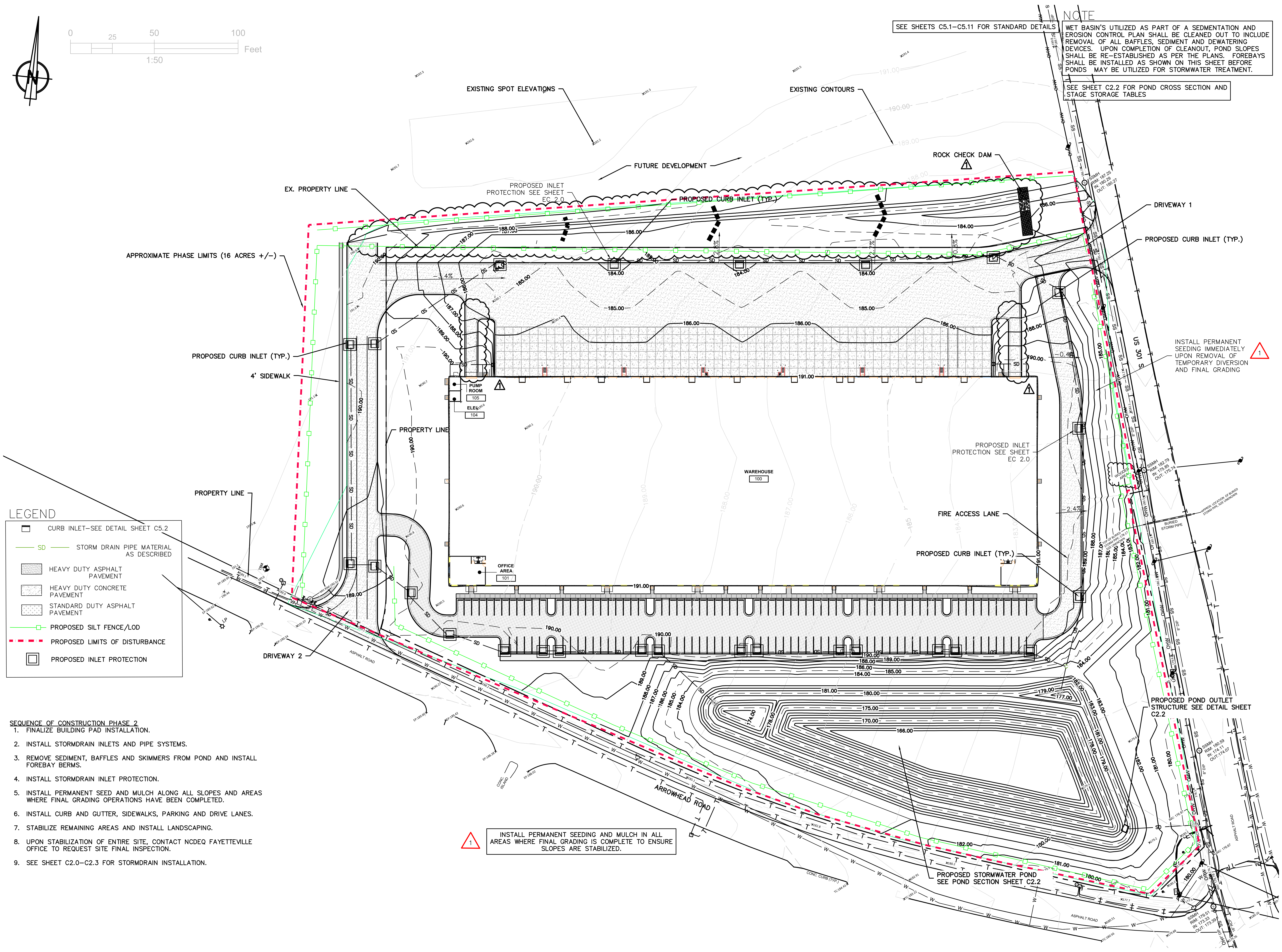
0
25
50
100
Feet
1:50
EXISTING SPOT ELEVATIONS
EXISTING CONTOURS
FUTURE DEVELOPMENT
ROCK CHECK DAM
EX. PROPERTY LINE
PROPOSED INLET PROTECTION SEE SHEET EC 2.0
PROPOSED CURB INLET (TYP.)
DRIVEWAY 1
PROPOSED CURB INLET (TYP.)
APPROXIMATE PHASE LIMITS (16 ACRES +/-)
PROPOSED CURB INLET (TYP.)
4' SIDEWALK
US 301 S
PUMP ROOM 105
ELEC. 104
PROPERTY LINE
WAREHOUSE 100
PROPOSED INLET PROTECTION SEE SHEET EC 2.0
PROPERTY LINE
FIRE ACCESS LANE
PROPOSED CURB INLET (TYP.)
OFFICE AREA 101
DRIVEWAY 2
ARROWHEAD ROAD
PROPOSED POND OUTLET STRUCTURE SEE DETAIL SHEET C2.2
PROPOSED STORMWATER POND SEE POND SECTION SHEET C2.2

SEE SHEETS C5.1–C5.11 FOR STANDARD DETAILS

NOTE

WET BASIN'S UTILIZED AS PART OF A SEDMENTATION AND EROSION CONTROL PLAN SHALL BE CLEANED OUT TO INCLUDE REMOVAL OF ALL BAFFLES, SEDIMENT AND DEWATERING DEVICES. UPON COMPLETION OF CLEANOUT, POND SLOPES SHALL BE RE–ESTABLISHED AS PER THE PLANS. FOREBAYS SHALL BE INSTALLED AS SHOWN ON THIS SHEET BEFORE PONDS MAY BE UTILIZED FOR STORMWATER TREATMENT.

SEE SHEET C2.2 FOR POND CROSS SECTION AND STAGE STORAGE TABLES

INSTALL PERMANENT SEEDING IMMEDIATELY UPON REMOVAL OF TEMPORARY DIVERSION AND FINAL GRADING △1

△1 INSTALL PERMANENT SEEDING AND MULCH IN ALL AREAS WHERE FINAL GRADING IS COMPLETE TO ENSURE SLOPES ARE STABILIZED.

LEGEND

▭	CURB INLET–SEE DETAIL SHEET C5.2
— SD —	STORM DRAIN PIPE MATERIAL AS DESCRIBED
▨	HEAVY DUTY ASPHALT PAVEMENT
▨	HEAVY DUTY CONCRETE PAVEMENT
▨	STANDARD DUTY ASPHALT PAVEMENT
—□—	PROPOSED SILT FENCE/LOD
▬ ▬ ▬	PROPOSED LIMITS OF DISTURBANCE
▣	PROPOSED INLET PROTECTION

SEQUENCE OF CONSTRUCTION PHASE 2

1. FINALIZE BUILDING PAD INSTALLATION.
2. INSTALL STORMDRAIN INLETS AND PIPE SYSTEMS.
3. REMOVE SEDIMENT, BAFFLES AND SKIMMERS FROM POND AND INSTALL FOREBAY BERMS.
4. INSTALL STORMDRAIN INLET PROTECTION.
5. INSTALL PERMANENT SEED AND MULCH ALONG ALL SLOPES AND AREAS WHERE FINAL GRADING OPERATIONS HAVE BEEN COMPLETED.
6. INSTALL CURB AND GUTTER, SIDEWALKS, PARKING AND DRIVE LANES.
7. STABILIZE REMAINING AREAS AND INSTALL LANDSCAPING.
8. UPON STABILIZATION OF ENTIRE SITE, CONTACT NCDEQ FAYETTEVILLE OFFICE TO REQUEST SITE FINAL INSPECTION.
9. SEE SHEET C2.0–C2.3 FOR STORMDRAIN INSTALLATION.

TC^2
ENGINEERING, PLLC
201 N. Front Street
Suite M-108
Wilmington, NC 28401
910-547-5856

NO.	REVISION	DATE
1	REVISED PER DEQ COMMENT	7/17/25

SAMET HARNETT COUNTY 1

EROSION CONTROL SHEET PHASE–2

ORIGINAL MAP SIZE 24" X 36"
DRAWN: BPE
CHECKED: WPC
PROJECT NO.:

SHEET:
EC1.2

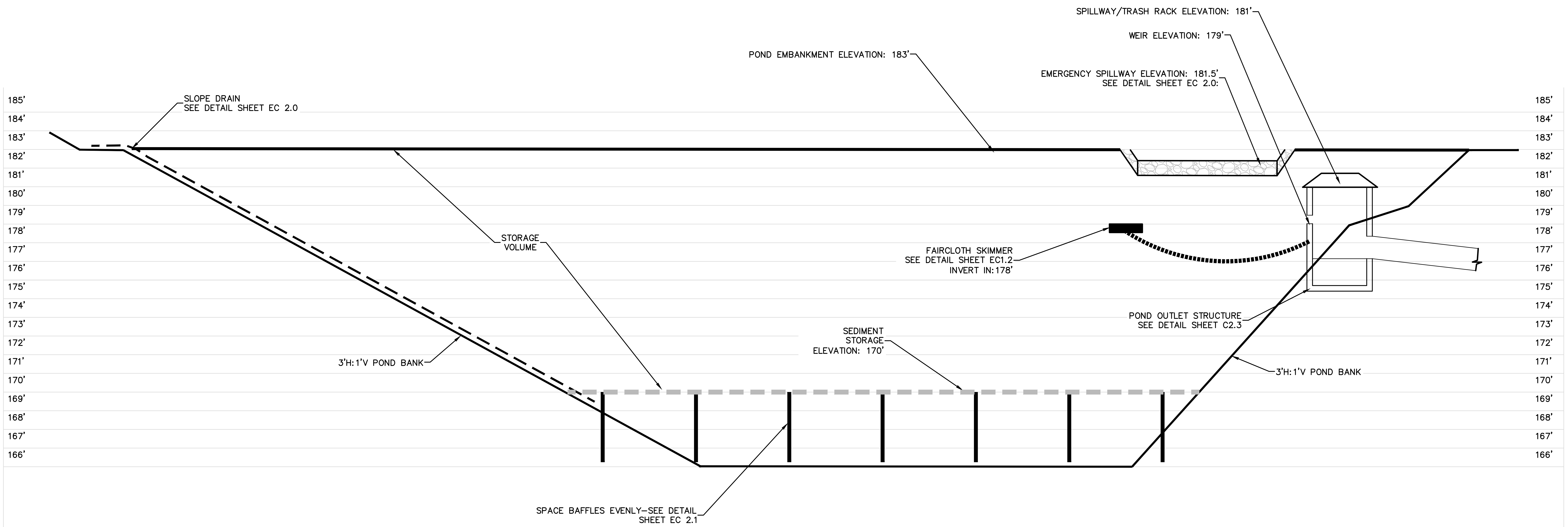
SPILLWAY/TRASH RACK ELEVATION: 181'
WEIR ELEVATION: 179'
POND EMBANKMENT ELEVATION: 183'
EMERGENCY SPILLWAY ELEVATION: 181.5'
SEE DETAIL SHEET EC 2.0
SLOPE DRAIN
SEE DETAIL SHEET EC 2.0
185'
184'
183'
182'
181'
180'
179'
178'
177'
176'
175'
174'
173'
172'
171'
170'
169'
168'
167'
166'
STORAGE
VOLUME
FAIRCLOTH SKIMMER
SEE DETAIL SHEET EC1.2
INVERT IN:178'
POND OUTLET STRUCTURE
SEE DETAIL SHEET C2.3
SEDIMENT
STORAGE
ELEVATION: 170'
3'H:1'V POND BANK
3'H:1'V POND BANK
SPACE BAFFLES EVENLY-SEE DETAIL
SHEET EC 2.1

POND/SEDIMENT BASIN PROFILE (NOT TO SCALE)

STAGE STORAGE TABLE

ELEV	AREA (sq. ft.)	DEPTH (ft)	AVG END INC. VOL. (cu. ft.)	AVG END TOTAL VOL. (cu. ft.)	CONIC INC. VOL. (cu. ft.)	CONIC TOTAL VOL. (cu. ft.)
166.00	12,910.49	N/A	N/A	0.00	N/A	0.00
167.00	14,977.94	1.00	13944.21	13944.21	13931.42	13931.42
168.00	17,189.00	1.00	16083.47	30027.69	16070.79	30002.22
169.00	19,543.67	1.00	18366.34	48394.03	18353.75	48355.96
170.00	22,041.95	1.00	20792.81	69186.84	20780.30	69136.26
171.00	24,683.84	1.00	23362.90	92549.74	23350.44	92486.70
172.00	27,469.34	1.00	26076.59	118626.33	26064.19	118550.89
173.00	30,398.45	1.00	28933.89	147560.22	28921.53	147472.42
174.00	33,470.93	1.00	31934.69	179494.91	31922.36	179394.78
175.00	36,639.54	1.00	35055.24	214550.15	35043.30	214438.08
176.00	39,864.71	1.00	38252.13	252802.28	38240.79	252678.87
177.00	43,146.44	1.00	41505.58	294307.85	41494.76	294173.63
178.00	46,484.74	1.00	44815.59	339123.44	44805.22	338978.85
179.00	49,879.59	1.00	48182.16	387305.60	48172.19	387151.05
180.00	53,331.00	1.00	51605.29	438910.90	51595.67	438746.72
181.00	60,403.51	1.00	56867.26	495778.15	56830.57	495577.29
182.00	64,024.61	1.00	62214.06	557992.21	62205.27	557782.57
183.00	67,702.26	1.00	65863.43	623855.65	65854.88	623637.44

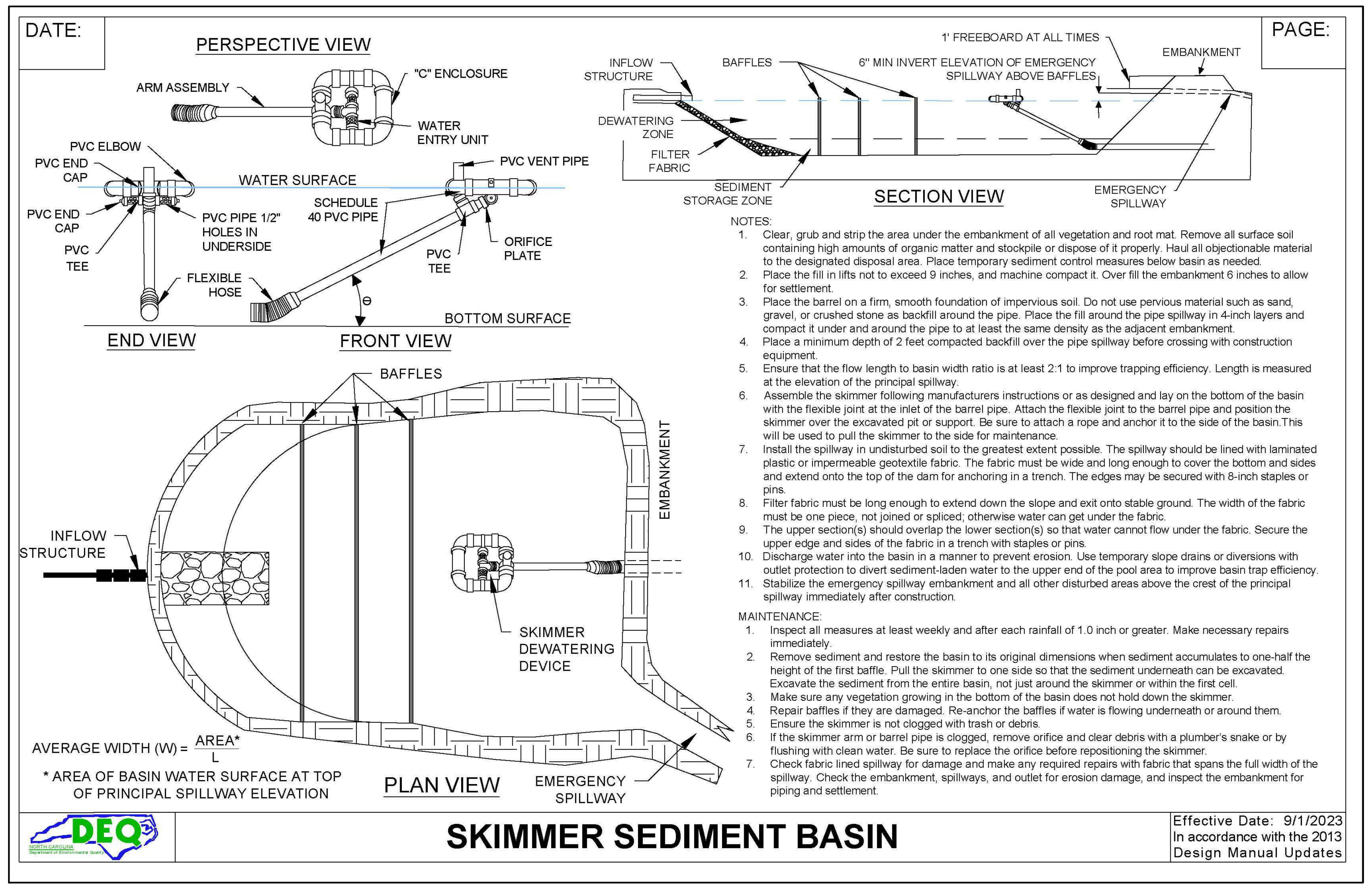
PERSPECTIVE VIEW
ARM ASSEMBLY
"C" ENCLOSURE
WATER ENTRY UNIT
PVC ELBOW
PVC END CAP
PVC END CAP
PVC TEE
PVC PIPE 1/2" HOLES IN UNDERSIDE
WATER SURFACE
SCHEDULE 40 PVC PIPE
PVC VENT PIPE
PVC TEE
ORIFICE PLATE
FLEXIBLE HOSE
θ
BOTTOM SURFACE
END VIEW
FRONT VIEW
INFLOW STRUCTURE
BAFFLES
1' FREEBOARD AT ALL TIMES
6" MIN INVERT ELEVATION OF EMERGENCY SPILLWAY ABOVE BAFFLES
EMBANKMENT
DEWATERING ZONE
FILTER FABRIC
SEDIMENT STORAGE ZONE
SECTION VIEW
EMERGENCY SPILLWAY
BAFFLES
EMBANKMENT
INFLOW STRUCTURE
SKIMMER DEWATERING DEVICE
AVERAGE WIDTH (W) = AREA*/L
* AREA OF BASIN WATER SURFACE AT TOP OF PRINCIPAL SPILLWAY ELEVATION
PLAN VIEW
EMERGENCY SPILLWAY
DEQ

DATE:

PAGE:

NOTES:
1. Clear, grub and strip the area under the embankment of all vegetation and root mat. Remove all surface soil containing high amounts of organic matter and stockpile or dispose of it properly. Haul all objectionable material to the designated disposal area. Place temporary sediment control measures below basin as needed.
2. Place the fill in lifts not to exceed 9 inches, and machine compact it. Over fill the embankment 6 inches to allow for settlement.
3. Place the barrel on a firm, smooth foundation of impervious soil. Do not use pervious material such as sand, gravel, or crushed stone as backfill around the pipe. Place the fill around the pipe spillway in 4-inch layers and compact it under and around the pipe to at least the same density as the adjacent embankment.
4. Place a minimum depth of 2 feet compacted backfill over the pipe spillway before crossing with construction equipment.
5. Ensure that the flow length to basin width ratio is at least 2:1 to improve trapping efficiency. Length is measured at the elevation of the principal spillway.
6. Assemble the skimmer following manufacturers instructions or as designed and lay on the bottom of the basin with the flexible joint at the inlet of the barrel pipe. Attach the flexible joint to the barrel pipe and position the skimmer over the excavated pit or support. Be sure to attach a rope and anchor it to the side of the basin.This will be used to pull the skimmer to the side for maintenance.
7. Install the spillway in undisturbed soil to the greatest extent possible. The spillway should be lined with laminated plastic or impermeable geotextile fabric. The fabric must be wide and long enough to cover the bottom and sides and extend onto the top of the dam for anchoring in a trench. The edges may be secured with 8-inch staples or pins.
8. Filter fabric must be long enough to extend down the slope and exit onto stable ground. The width of the fabric must be one piece, not joined or spliced; otherwise water can get under the fabric.
9. The upper section(s) should overlap the lower section(s) so that water cannot flow under the fabric. Secure the upper edge and sides of the fabric in a trench with staples or pins.
10. Discharge water into the basin in a manner to prevent erosion. Use temporary slope drains or diversions with outlet protection to divert sediment-laden water to the upper end of the pool area to improve basin trap efficiency.
11. Stabilize the emergency spillway embankment and all other disturbed areas above the crest of the principal spillway immediately after construction.

MAINTENANCE:
1. Inspect all measures at least weekly and after each rainfall of 1.0 inch or greater. Make necessary repairs immediately.
2. Remove sediment and restore the basin to its original dimensions when sediment accumulates to one-half the height of the first baffle. Pull the skimmer to one side so that the sediment underneath can be excavated. Excavate the sediment from the entire basin, not just around the skimmer or within the first cell.
3. Make sure any vegetation growing in the bottom of the basin does not hold down the skimmer.
4. Repair baffles if they are damaged. Re-anchor the baffles if water is flowing underneath or around them.
5. Ensure the skimmer is not clogged with trash or debris.
6. If the skimmer arm or barrel pipe is clogged, remove orifice and clear debris with a plumber's snake or by flushing with clean water. Be sure to replace the orifice before repositioning the skimmer.
7. Check fabric lined spillway for damage and make any required repairs with fabric that spans the full width of the spillway. Check the embankment, spillways, and outlet for erosion damage, and inspect the embankment for piping and settlement.

SKIMMER SEDIMENT BASIN

Effective Date: 9/1/2023
In accordance with the 2013
Design Manual Updates

TC^2
ENGINEERING, PLLC
201 N. Front Street
Suite M-108
Wilmington, NC 28401
910-547-5856

NO.	REVISION	DATE

SAMET HARNETT COUNTY 1

POND PROFILE

ORIGINAL MAP SIZE
24" X 36"
DRAWN: BPE
CHECKED: WPC
PROJECT NO.:

SHEET:
EC1.3

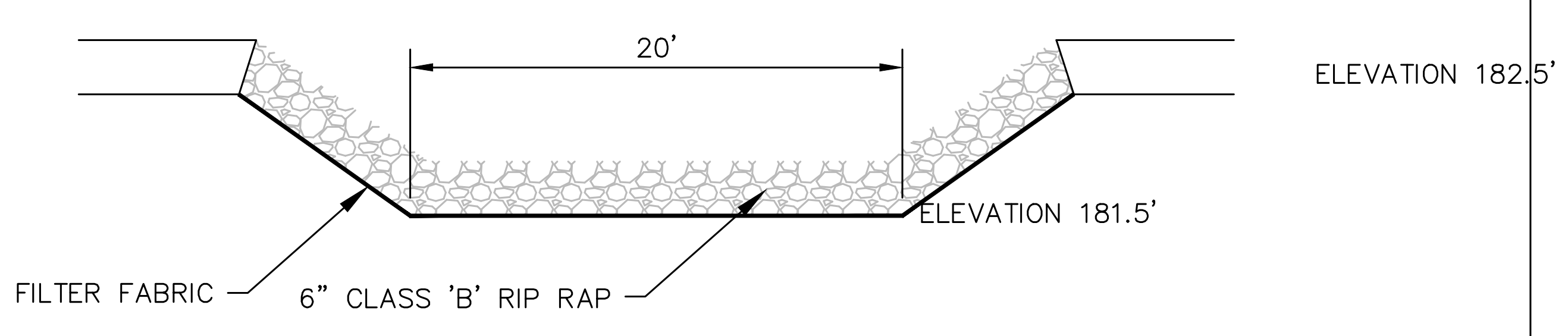
20'
ELEVATION 182.5'
ELEVATION 181.5'
FILTER FABRIC
6" CLASS 'B' RIP RAP

EMERGENCY SPILLWAY

NOT TO SCALE

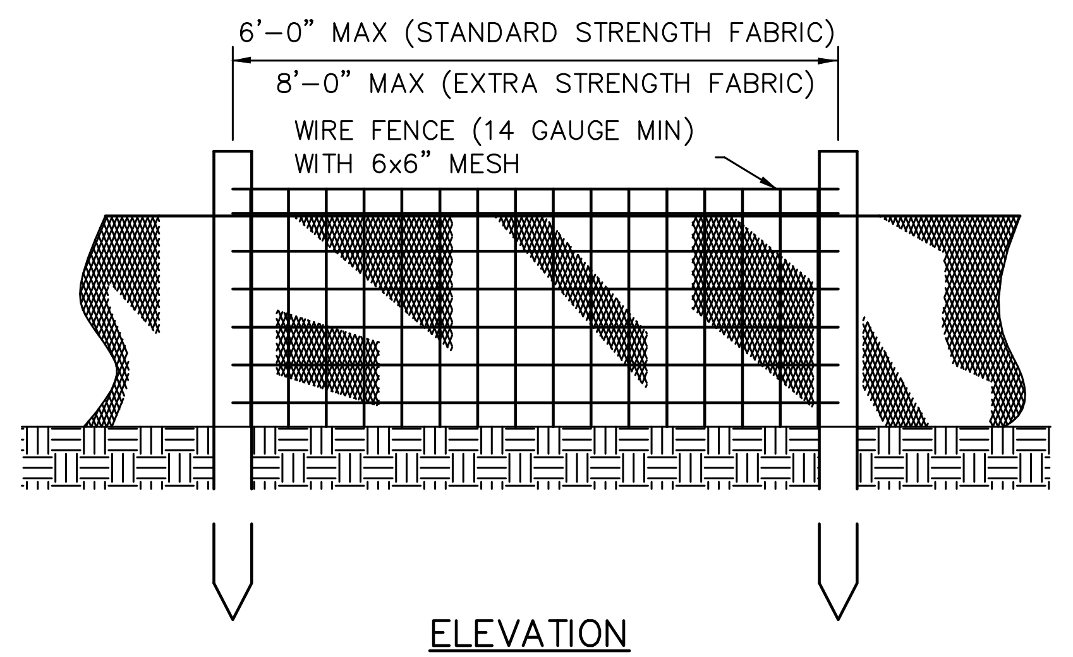
6'–0" MAX (STANDARD STRENGTH FABRIC)
8'–0" MAX (EXTRA STRENGTH FABRIC)
WIRE FENCE (14 GAUGE MIN)
WITH 6x6" MESH

ELEVATION

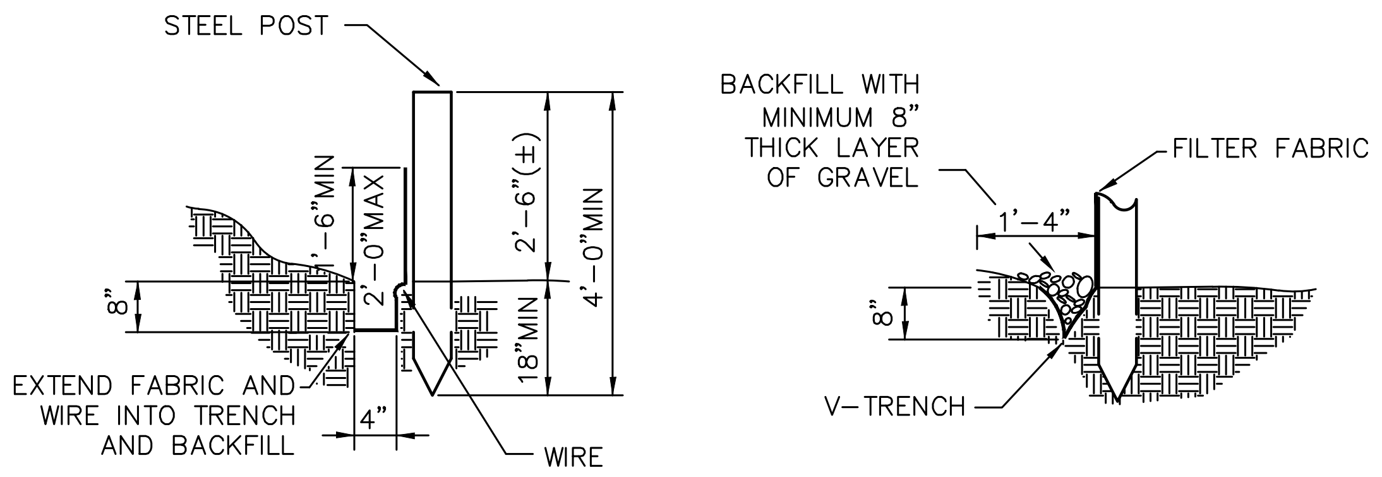
STEEL POST
8"
1'–6"MIN
2'–0"MAX
2'–6"(±)
4'–0"MIN
18"MIN
4"
EXTEND FABRIC AND WIRE INTO TRENCH AND BACKFILL
WIRE
BACKFILL WITH MINIMUM 8" THICK LAYER OF GRAVEL
1'–4"
FILTER FABRIC
8"
V–TRENCH

EMBEDMENT AND POST DETAIL

GENERAL NOTES:

1. WIRE SHALL BE A MINIMUM OF 32 INCHES AND SHALL BE A MINIMUM OF 14 GAUGE WITH 6"x6" MESH SPACING.
2. FILTER FABRIC SHALL BE A MINIMUM OF 36" IN WIDTH AND SHALL BE FASTENED ADEQUATELY TO THE WIRE AND/OR POST IN ACCORDANCE WITH MANUFACTURER'S RECOMMENDATION.
3. STEEL POSTS SHALL BE 4'–0" IN HEIGHT AND BE OF THE SELF FASTENER ANGLE STEEL TYPE.

MAINTENANCE:
1. INSPECT ALL MEASURES AT LEAST WEEKLY AND AFTER EACH RAINFALL OF 1.0 INCH OR GREATER. MAKE ANY REQUIRED REPAIRS IMMEDIATELY.
2. SHOULD THE FABRIC OF A SEDIMENT FENCE COLLAPSE, TEAR, DECOMPOSE, OR BECOME INEFFECTIVE, REPLACE IT PROMPTLY.
3. REMOVE SEDIMENT DEPOSITS AS NECESSARY TO PROVIDE ADEQUATE STORAGE VOLUME FOR THE NEXT RAIN AND REDUCE PRESSURE ON THE FENCE. TAKE CARE TO AVOID UNDERMINING THE FENCE DURING CLEANOUTS.
4. REMOVE ALL FENCING MATERIALS AND UNSTABLE SEDIMENT DEPOSITS AND BRING THE AREA TO GRADE AND STABILIZE IT AFTER THE CONTRIBUTING DRAINAGE AREA HAS BEEN PROPERLY STABILIZED.

NOT TO SCALE

TEMPORARY SILT FENCE

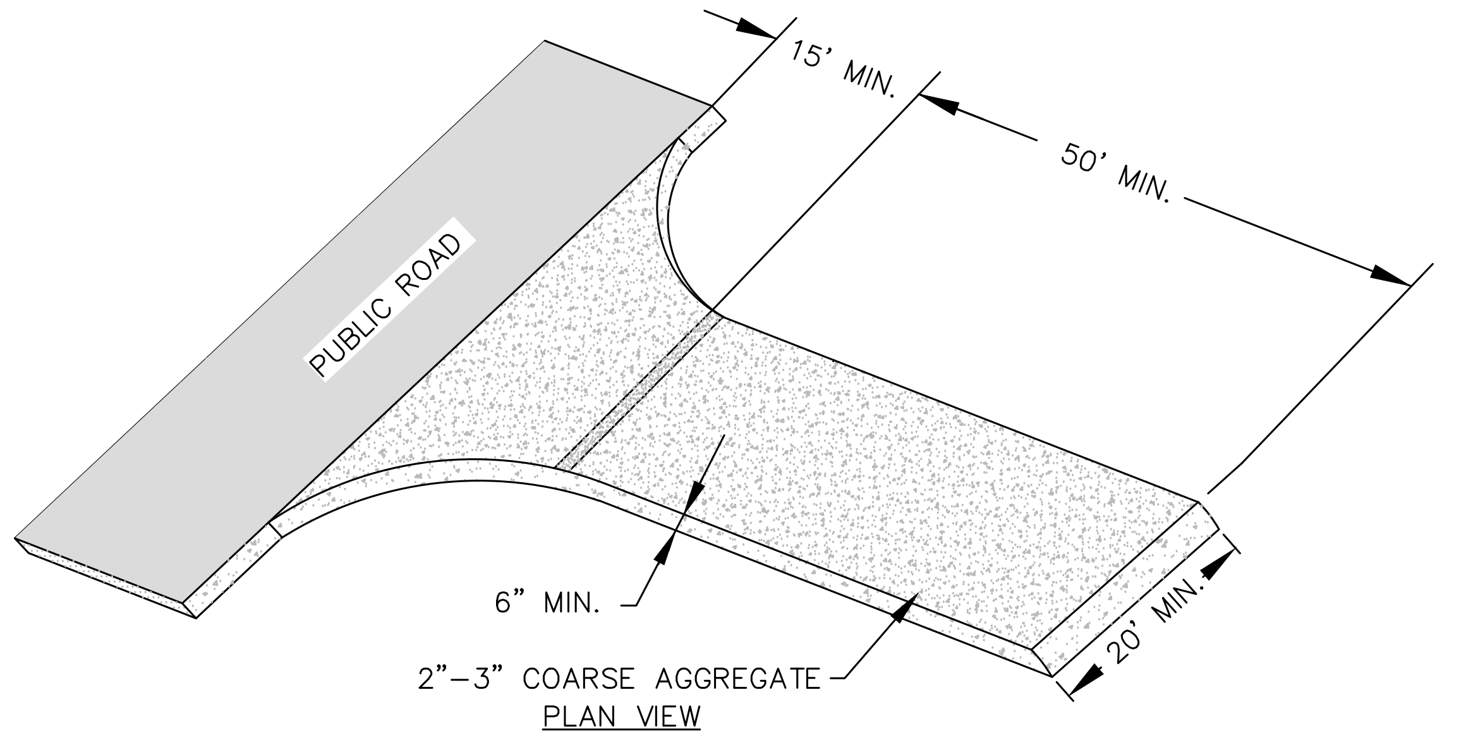
15' MIN.
50' MIN.
PUBLIC ROAD
6" MIN.
20' MIN.
2"–3" COARSE AGGREGATE

PLAN VIEW

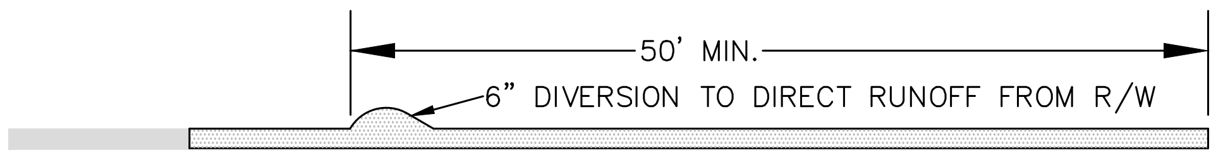
50' MIN.
6" DIVERSION TO DIRECT RUNOFF FROM R/W

SECTION VIEW

TEMPORARY CONSTRUCTION ENTRANCE

NOT TO SCALE

CONSTRUCTION SPECIFICATIONS:

1. CLEAR THE ENTRANCE AREA OF ALL VEGETATION, ROOTS, AND OTHER OBJECTIONABLE MATERIAL AND PROPERLY GRADE IT.
2. PLACE THE GRAVEL TO THE SPECIFIC GRADE AND DIMENSIONS SHOWN ON THE PLANS, AND SMOOTH IT OUT.
3. PROVIDE DRAINAGE TO CARRY WATER TO A SEDIMENT TRAP OR OTHER SUITABLE OUTLET.
4. USE GEOTEXTILE FABRICS IF SUBJECT TO SEEPAGE OR HIGH WATER TABLE.

MAINTENANCE:

1. MAINTAIN THE GRAVEL PAD IN A CONDITION TO PREVENT MUD OR SEDIMENT FROM LEAVING THE CONSTRUCTION SITE. THIS MAY REQUIRE PERIODIC TOP–DRESSING WITH 2–INCHES OF #4 STONE. AFTER EACH RAINFALL, INSPECT ANY STRUCTURE USED TO TRAP SEDIMENT AND CLEAN IT OUT IF NECESSARY. IMMEDIATELY REMOVE ALL OBJECTIONABLE MATERIALS SPILLED, WASHED, OR TRACKED ONTO PUBLIC ROADWAYS.

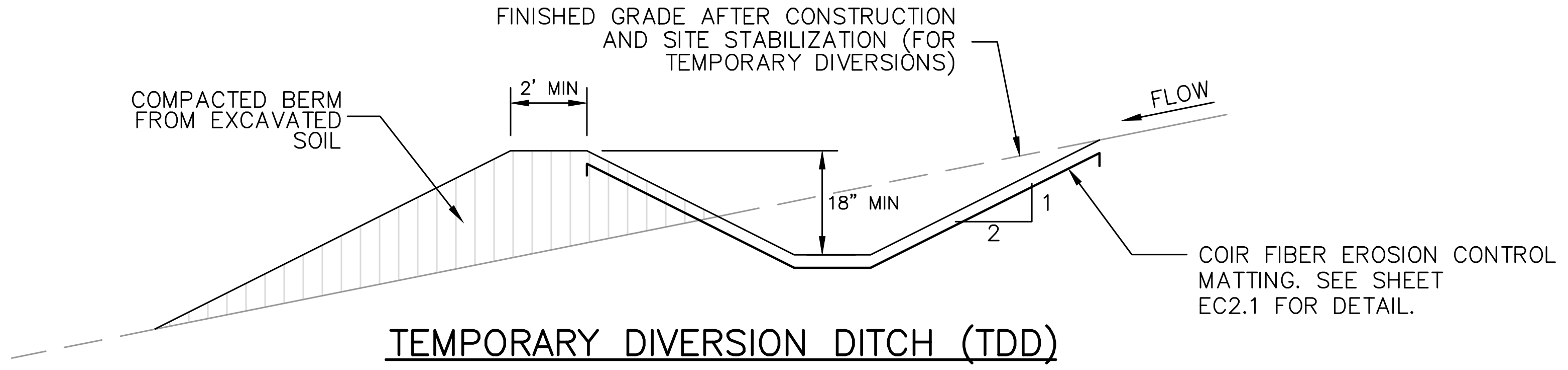
FINISHED GRADE AFTER CONSTRUCTION AND SITE STABILIZATION (FOR TEMPORARY DIVERSIONS)
COMPACTED BERM FROM EXCAVATED SOIL
2' MIN
FLOW
18" MIN
2
1
COIR FIBER EROSION CONTROL MATTING. SEE SHEET EC2.1 FOR DETAIL.

TEMPORARY DIVERSION DITCH (TDD)

NOT TO SCALE

NOTES:

1. THE CONTRACTOR SHALL CONSTRUCT THE TEMPORARY DIVERSION DITCHES TO PROVIDE POSITIVE DRAINAGE OF THE DISTURBED AREAS TO THE TEMPORARY SEDIMENT BASINS, AND TO DIVERT DRAINAGE OF UNDISTURBED AREAS AROUND WORK ZONES AS INDICATED.
2. SEE SHEET EC2.1 FOR DETAIL ON EROSION CONTROL MATTING AND ASSOCIATED CALCULATIONS.

MAINTENANCE REQUIREMENTS:

1. INSPECT TEMPORARY DIVERSIONS ONCE A WEEK AND AFTER EVERY RAINFALL. IMMEDIATELY REMOVE SEDIMENT FROM THE FLOW AREA AND REPAIR DIVERSION RIDGE. CAREFULLY CHECK OUTLETS AND MAKE TIMELY REPAIRS AS NEEDED. WHEN THE AREA PROTECTED IS PERMANENTLY STABILIZED, REMOVE THE RIDGE AND THE CHANNEL TO BLEND WITH THE NATURAL GROUND LEVEL AND APPROPRIATELY STABILIZE THE AREA.

FERTILIZER: FERTILIZER SHALL BE APPLIED AT THE RATE OF 500 LB/ACRE OF A 10–10–10 COMMERCIAL FERTILIZER. FERTILIZER SHALL BE APPLIED IN ACCORDANCE WITH THE REQUIREMENTS OF SECTION T–901 SEEDING OF THE PROJECT SPECIFICATIONS.

LIME: LIME SHALL BE APPLIED AT THE RATE OF 3,000 LBS/ACRE. LIME SHALL BE APPLIED IN ACCORDANCE WITH SECTION T–901 SEEDING OF THE PROJECT SPECIFICATIONS.

MULCH: MULCH MAY CONSIST OF HAY, STRAW, OR MANUFACTURED MULCH. MULCH SHALL BE EVENLY APPLIED AT THE RATE OF 2 TO 3 TONS PER ACRE TO PROVIDE A LOOSE DEPTH OF 1 ½"–3". MANUFACTURED MULCH SHALL BE APPLIED AT THE RATE AS RECOMMENDED BY THE MANUFACTURER. MULCH SHALL BE APPLIED TO ALL SEEDED AREAS IN ACCORDANCE WITH THE REQUIREMENTS OF SECTION T–908 – MULCHING OF THE SPECIFICATIONS.

MAINTENANCE OF SEEDED AREAS: THE CONTRACTOR SHALL BE REQUIRED TO ESTABLISH A GOOD STAND OF GRASS OF UNIFORM COLOR AND DENSITY. THE CONTRACTOR SHALL WATER THE SEEDED AREAS AS REQUIRED FOR SEED GERMINATION AND AS REQUIRED TO MAINTAIN AREAS OF ESTABLISHED GRASS. THE CONTRACTOR SHALL MOW GRASS AREAS AND CONTROL THE PRESENCE OF INVASIVE SPECIES AS REQUIRED. CONTRACTOR WILL BE REQUIRED TO RESEED AND MULCH ALL AREAS WHERE SEEDING EMERGENCE IS POOR. ALL AREAS OF EROSION SHALL BE REPAIRED AND RESEEDED AS SOON AS POSSIBLE. CONTRACTOR SHALL PROTECT SEEDED AREAS FROM TRAFFIC AS MUCH AS POSSIBLE.

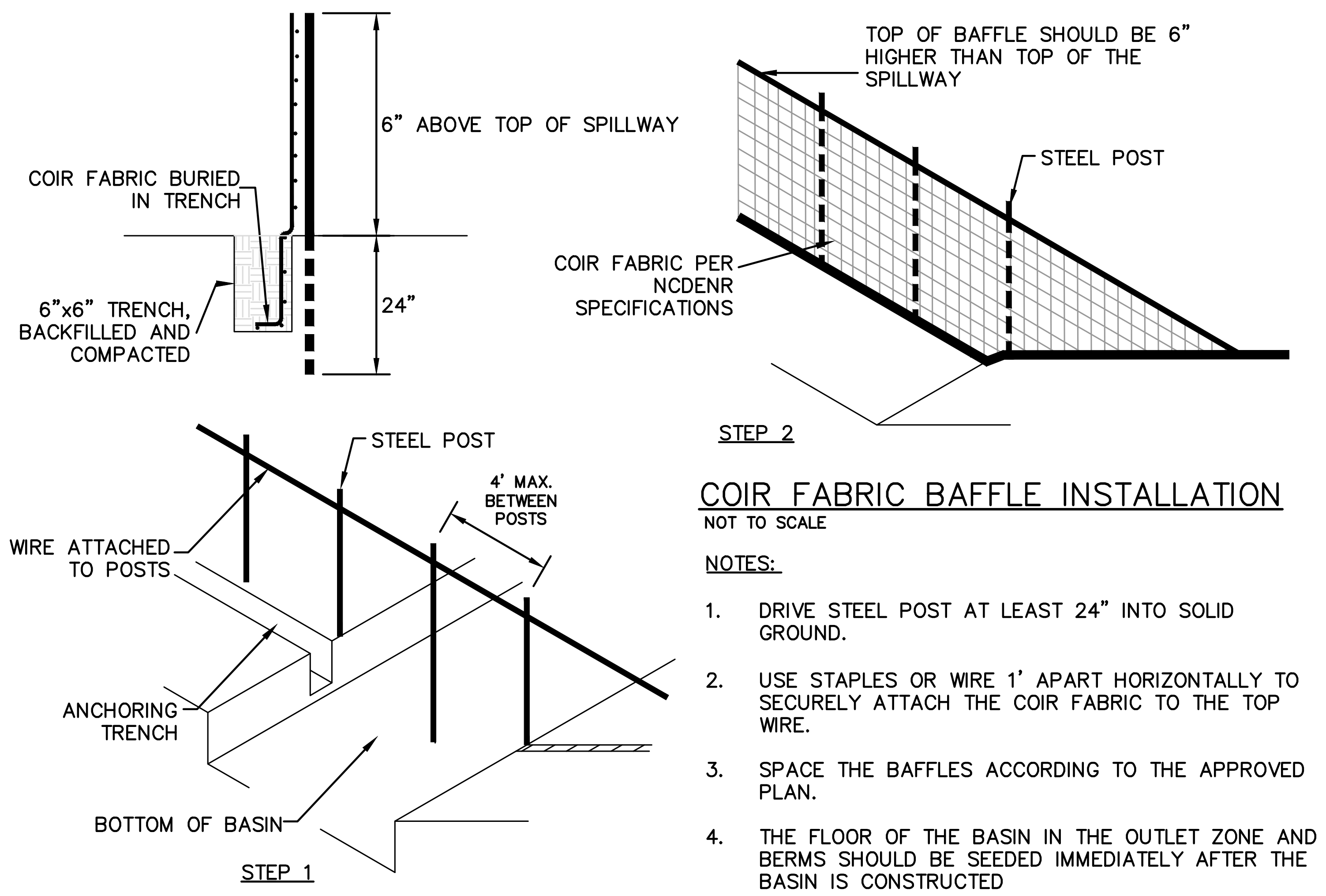
6" ABOVE TOP OF SPILLWAY
COIR FABRIC BURIED IN TRENCH
6"x6" TRENCH, BACKFILLED AND COMPACTED
24"
TOP OF BAFFLE SHOULD BE 6" HIGHER THAN TOP OF THE SPILLWAY
STEEL POST
COIR FABRIC PER NCDENR SPECIFICATIONS
STEP 2
STEEL POST
4' MAX. BETWEEN POSTS
WIRE ATTACHED TO POSTS
ANCHORING TRENCH
BOTTOM OF BASIN
STEP 1

COIR FABRIC BAFFLE INSTALLATION

NOT TO SCALE

NOTES:

1. DRIVE STEEL POST AT LEAST 24" INTO SOLID GROUND.
2. USE STAPLES OR WIRE 1' APART HORIZONTALLY TO SECURELY ATTACH THE COIR FABRIC TO THE TOP WIRE.
3. SPACE THE BAFFLES ACCORDING TO THE APPROVED PLAN.
4. THE FLOOR OF THE BASIN IN THE OUTLET ZONE AND BERMS SHOULD BE SEEDED IMMEDIATELY AFTER THE BASIN IS CONSTRUCTED.

MAINTENANCE REQUIREMENTS:

1. INSPECT BAFFLES AT LEAST ONCE A WEEK AND AFTER EACH RAINFALL. MAKE ANY REQUIREDREPAIRS IMMEDIATELY.
2. BE SURE TO MAINTAIN ACCESS TO THE BAFFLES. SHOULD THE FABRIC OF A BAFFLE COLLAPSE,TEAR, DECOMPOSE, OR BECOME INEFFECTIVE, REPLACE IT PROMPTLY.
3. REMOVE SEDIMENT DEPOSITS WHEN IT REACHES HALF FULL, TO PROVIDE ADEQUATE STORAGE VOLUME FOR THE NEXT RAIN AND TO REDUCE PRESSURE ON THE BAFFLES.TAKE CARE TO AVOID DAMAGING THE BAFFLES DURING CLEANOUT, AND REPLACE IF DAMAGED DURING CLEANOUT OPERATIONS. SEDIMENT DEPTH SHOULD NEVER EXCEED HALF THE DESIGNED STORAGE DEPTH.
4. AFTER THE CONTRIBUTING DRAINAGE AREA HAS BEEN PROPERLY STABILIZED, REMOVE ALL BAFFLE MATERIALS AND UNSTABLE SEDIMENT DEPOSITS, BRING THE AREA TO GRADE, AND STABILIZE IT.

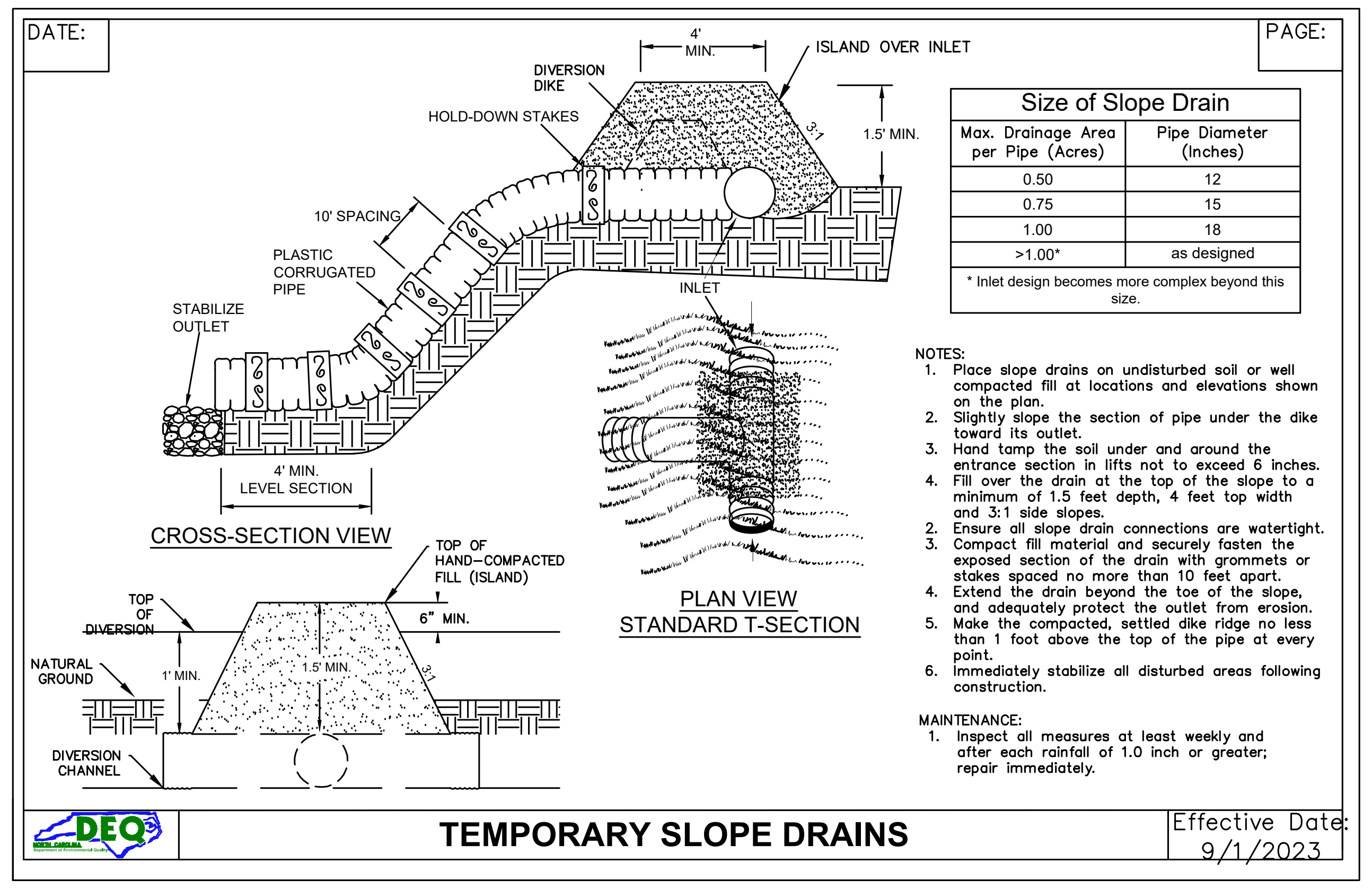
DATE:
PAGE:
DIVERSION DIKE
HOLD-DOWN STAKES
4' MIN.
ISLAND OVER INLET
3:1
1.5' MIN.
10' SPACING
PLASTIC CORRUGATED PIPE
STABILIZE OUTLET
INLET
4' MIN. LEVEL SECTION
CROSS-SECTION VIEW
TOP OF HAND–COMPACTED FILL (ISLAND)
TOP OF DIVERSION
6" MIN.
NATURAL GROUND
1' MIN.
1.5' MIN.
3:1
DIVERSION CHANNEL
PLAN VIEW
STANDARD T-SECTION
DEQ

Size of Slope Drain	
Max. Drainage Area per Pipe (Acres)	Pipe Diameter (Inches)
0.50	12
0.75	15
1.00	18
>1.00*	as designed

* Inlet design becomes more complex beyond this size.

NOTES:
1. Place slope drains on undisturbed soil or well compacted fill at locations and elevations shown on the plan.
2. Slightly slope the section of pipe under the dike toward its outlet.
3. Hand tamp the soil under and around the entrance section in lifts not to exceed 6 inches.
4. Fill over the drain at the top of the slope to a minimum of 1.5 feet depth, 4 feet top width and 3:1 side slopes.
2. Ensure all slope drain connections are watertight.
3. Compact fill material and securely fasten the exposed section of the drain with grommets or stakes spaced no more than 10 feet apart.
4. Extend the drain beyond the toe of the slope, and adequately protect the outlet from erosion.
5. Make the compacted, settled dike ridge no less than 1 foot above the top of the pipe at every point.
6. Immediately stabilize all disturbed areas following construction.

MAINTENANCE:
1. Inspect all measures at least weekly and after each rainfall of 1.0 inch or greater; repair immediately.

TEMPORARY SLOPE DRAINS

Effective Date: 9/1/2023

1

PERMANENT SEEDING

Seed Mixture	Rate of Application	Planting Dates
Common Bermudagrass (Hulled)	50	March 1 - August 31
Common Bermudagrass (Unhulled)	70	September 1 - February 28

TEMPORARY SEEDING

Seed Mixture	Rate of Application	Planting Dates
Rye (Grain) Kobe Lespedeza	120 50	December 1 – April 15
Rye (Grain)	120	August 15 - December 30
Common Bermudagrass (Hulled)	50	March 1 – August 31

TEMPORARY AND PERMANENT SEEDING OPERATIONS

1

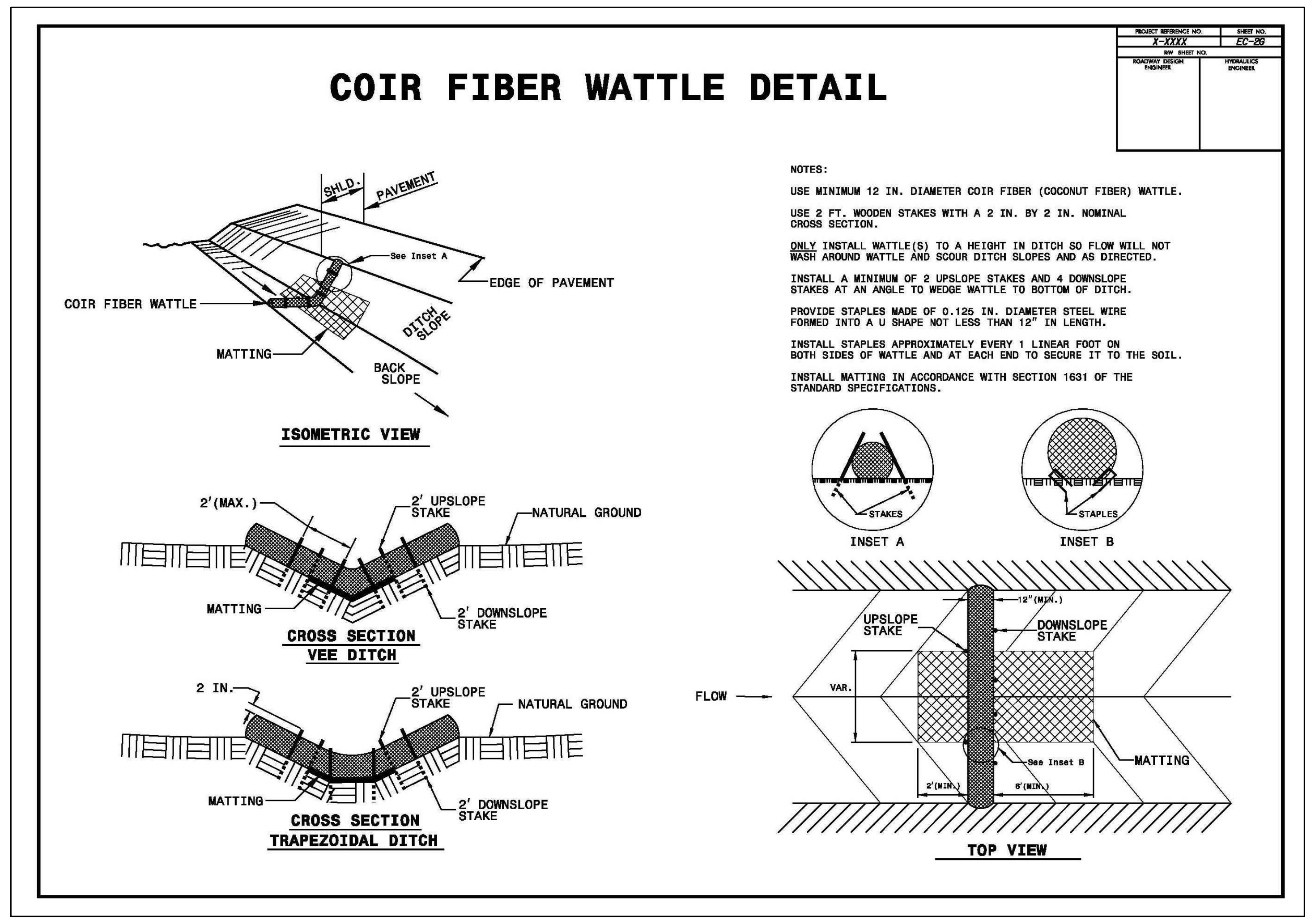
PROJECT REFERENCE NO.
X-XXXX
SHEET NO.
EC-2G
R/W SHEET NO.
ROADWAY DESIGN ENGINEER
HYDRAULICS ENGINEER
SHLD.
PAVEMENT
See Inset A
EDGE OF PAVEMENT
COIR FIBER WATTLE
DITCH SLOPE
MATTING
BACK SLOPE
ISOMETRIC VIEW
2'(MAX.)
2' UPSLOPE STAKE
NATURAL GROUND
MATTING
2' DOWNSLOPE STAKE
CROSS SECTION VEE DITCH
2 IN.
2' UPSLOPE STAKE
NATURAL GROUND
MATTING
2' DOWNSLOPE STAKE
CROSS SECTION TRAPEZOIDAL DITCH
STAKES
INSET A
STAPLES
INSET B
FLOW
12"(MIN.)
UPSLOPE STAKE
DOWNSLOPE STAKE
VAR.
See Inset B
MATTING
2'(MIN.)
6'(MIN.)
TOP VIEW

COIR FIBER WATTLE DETAIL

NOTES:

USE MINIMUM 12 IN. DIAMETER COIR FIBER (COCONUT FIBER) WATTLE.

USE 2 FT. WOODEN STAKES WITH A 2 IN. BY 2 IN. NOMINAL CROSS SECTION.

ONLY INSTALL WATTLE(S) TO A HEIGHT IN DITCH SO FLOW WILL NOT WASH AROUND WATTLE AND SCOUR DITCH SLOPES AND AS DIRECTED.

INSTALL A MINIMUM OF 2 UPSLOPE STAKES AND 4 DOWNSLOPE STAKES AT AN ANGLE TO WEDGE WATTLE TO BOTTOM OF DITCH.

PROVIDE STAPLES MADE OF 0.125 IN. DIAMETER STEEL WIRE FORMED INTO A U SHAPE NOT LESS THAN 12" IN LENGTH.

INSTALL STAPLES APPROXIMATELY EVERY 1 LINEAR FOOT ON BOTH SIDES OF WATTLE AND AT EACH END TO SECURE IT TO THE SOIL.

INSTALL MATTING IN ACCORDANCE WITH SECTION 1631 OF THE STANDARD SPECIFICATIONS.

MAINTENANCE REQUIREMENTS:

1. INSPECT COIR WATTLES AT LEAST ONCE A WEEK AND AFTER EACH RAINFALL. MAKE ANY REQUIRED REPAIRS.
2. REMOVE SEDIMENT AT LEAST WEEKLY AND AFTER EACH RAINFALL OF 1 INCH OR GREATER.
3. MAINTAIN GOOD CONTACT WITH THE GROUND AND PREVENT EROSION FROM OCCURRING BENEATH THE LOGS.
4. REPAIR ANY DAMAGED AREAS OR AREAS NOT IN CLOSE CONTACT WITH THE GROUND.CLEAR DEPOSITS WHEN THEY REACH HALF THE DESIGNED STORAGE DEPTH.

TC^2
ENGINEERING, PLLC
201 N. Front Street
Suite M-108
Wilmington, NC 28401
910-547-5856

NO.	REVISION	DATE
1	REVISED PER DEQ COMMENT	7/17/25

SAMET HARNETT COUNTY 1

EROSION AND SEDIMENT CONTROL DETAILS

ORIGINAL MAP SIZE
24" X 36"
DRAWN: BPE
CHECKED: WPC
PROJECT NO.:

SHEET:
EC2.0

DATE: PAGE:

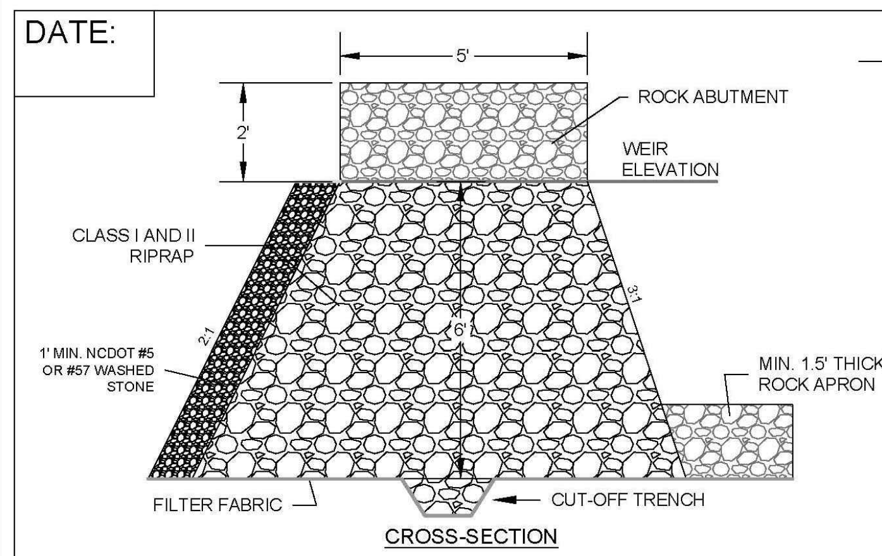
5'
2'
ROCK ABUTMENT
WEIR ELEVATION
CLASS I AND II RIPRAP
1' MIN. NCDOT #5 OR #57 WASHED STONE
MIN. 1.5' THICK ROCK APRON
FILTER FABRIC
CUT-OFF TRENCH
CROSS-SECTION

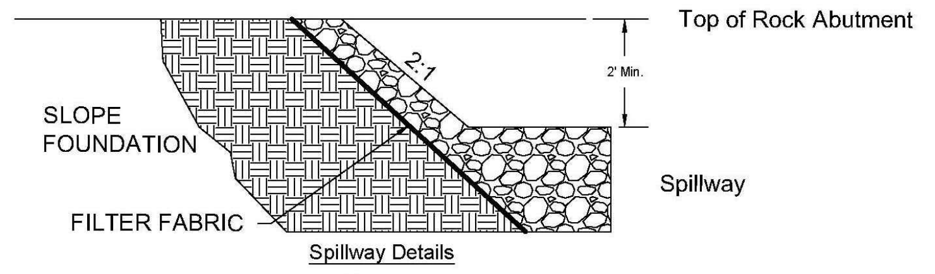
Top of Rock Abutment
2:1
2' Min.
SLOPE FOUNDATION
FILTER FABRIC
Spillway

Spillway Details

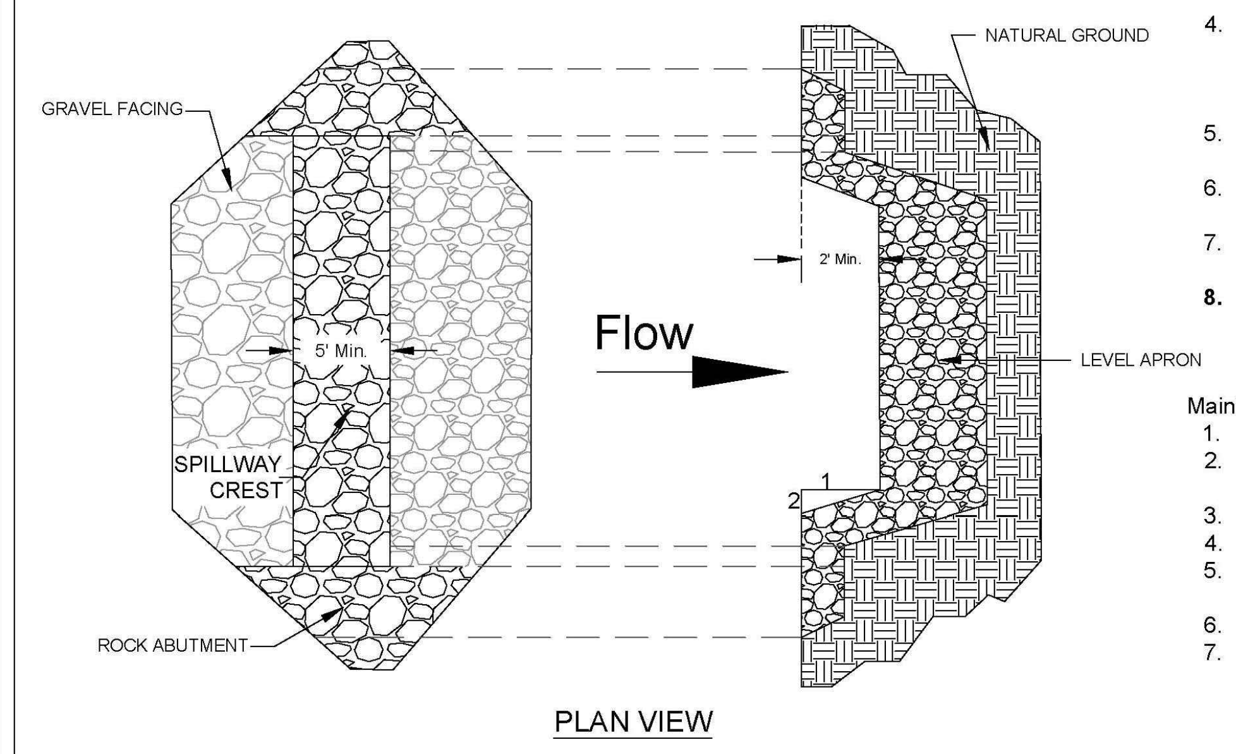
GRAVEL FACING
NATURAL GROUND
2' Min.
5' Min.
Flow
LEVEL APRON
SPILLWAY CREST
ROCK ABUTMENT
1
2
PLAN VIEW

Notes:

1. Clear the areas under the embankment and strip of roots and other objectionable material. Delay cleaning the reservoir area until the dam is in place.
2. Cover the foundation area, including the abutments with extra-strength filter fabric before backfilling with rock.
3. If a cutoff trench is required, excavate at center line of dam, extending all the way up the earth abutments. Apply filter fabric under the rockfill embankment from the upstream edge of the dam to the downstream edge of the apron. Overlap fill material a minimum of 1 foot at all joints, with the upstream strip laid over the downstream strip.
4. Construct the embankment with well-graded rock and gravel to the size and dimensions shown on the drawings. It is important that rock abutments be at least 2 feet higher than the spillway crest and at least 1 foot higher than the dam, all the way to the downstream toe, to prevent scour and erosion at the abutments.
5. Sediment-laden water from the construction site should be diverted into the basin reservoir at the furthest area from the dam.
6. Construct the rock dam before the basin area is cleared to minimize sediment yield from construction of the basin.
7. Immediately stabilize all areas disturbed during the construction of the dam except the sediment pool.
8. **Safety- Sediment basins should be considered dangerous because they attract children. Steep side slopes should be avoided. Fences with warning signs may be needed if trespassing is likely. All state and local requirements must be followed.**

Maintenance:

1. Inspect all measures at least weekly and after each rainfall of 1.0 inch or greater.
2. Remove sediment and restore original volume when sediment accumulates to about one-half the design volume.
3. Sediment removed should be placed above the basin and adequately stabilized.
4. Check the structure for erosion, piping, and rock displacement and repair immediately.
5. Remove the structure and any unstable sediment immediately after the construction site has been permanently stabilized.
6. Smooth the basin site to blend with the surrounding area and stabilize.
7. All water and sediment should be removed from the basin prior to dam removal. Sediment should be placed in designated disposal areas and not allowed to flow into streams or drainage ways during structure removal.

DEQ

SEDIMENT BASIN WITH ROCK DAM

Effective Date: 9/1/2023
In accordance with the 2013
Design Manual Updates

Date: Page:

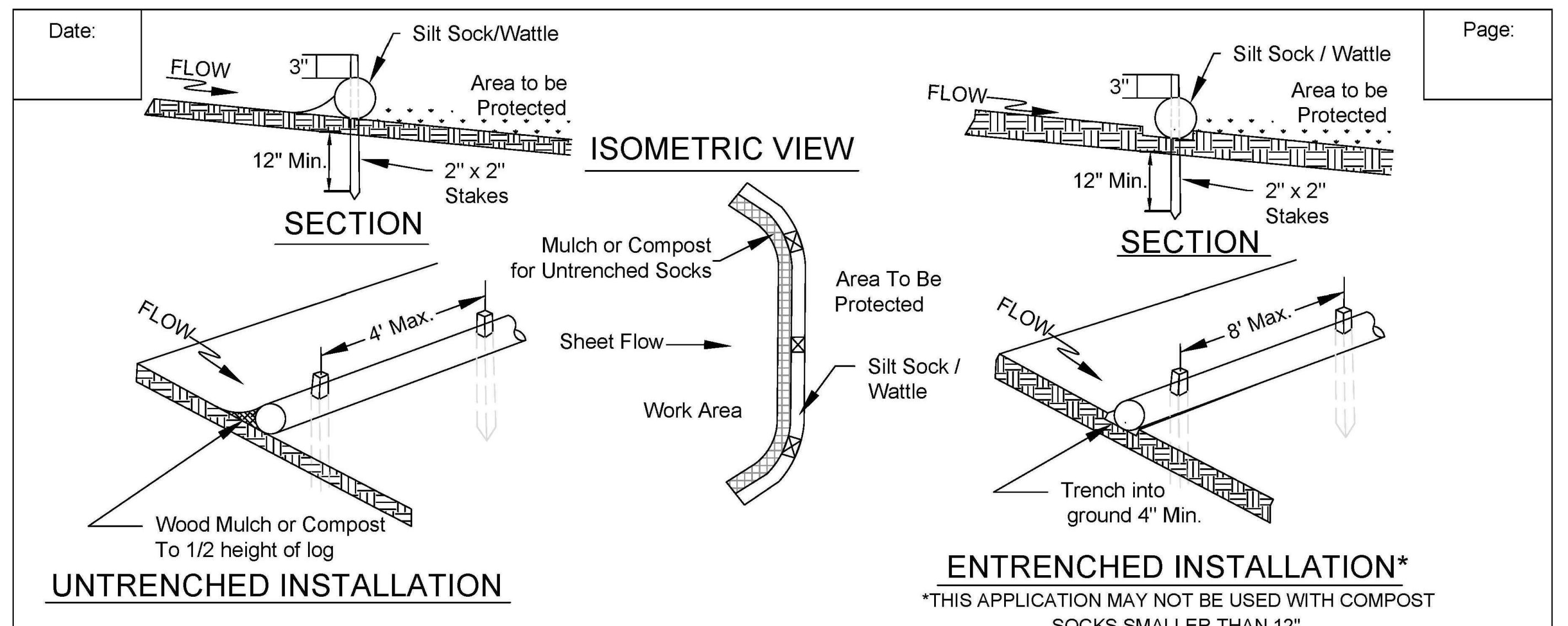
Silt Sock/Wattle
FLOW
3"
Area to be Protected
12" Min.
2" x 2" Stakes
SECTION
ISOMETRIC VIEW
Mulch or Compost for Untrenched Socks
Sheet Flow
Work Area
Area To Be Protected
Silt Sock / Wattle
4' Max.
8' Max.
Wood Mulch or Compost To 1/2 height of log
Trench into ground 4" Min.

UNTRENCHED INSTALLATION

ENTRENCHED INSTALLATION*

*THIS APPLICATION MAY NOT BE USED WITH COMPOST SOCKS SMALLER THAN 12".

NOTE:

1. Other materials providing equivalent protection against erosive velocities may be substituted for use in silt socks or wattles.
2. Fill silt sock/wattle netting uniformly to the desired length such that logs do not deform.
3. Silt sock/ Wattle should be installed parallel to and a minimum of 10 feet beyond the toe of a graded slope. Silt sock/Wattles located below flat areas should be located at the edge of the land disturbance. The ends of the silt sock/wattles should be turned slightly upslope to prevent runoff from going around the ends of the silt sock/wattles.
4. Oak or other durable hardwood stakes with a 2 inch x 2 inch cross section should be driven vertically plumb, through the center of the silt sock/wattle. Stakes should be placed at a maximum interval of 4 feet or a maximum interval of 8 feet if the silt sock/wattle is placed in a 4 inch trench.
5. In the event staking is not possible (ie. when silt socks/wattles are used on pavement) heavy concrete blocks shall be used behind the silt sock/wattle to hold it in place during runoff events.

COMPOST SOCK INITIAL FLOW RATES

Compost Sock Design Diameter	8 Inch (200 nm)	12 Inch (300 nm)	18 Inch (450 nm)	24 Inch (600 nm)	32 Inch (750 nm)
Maximum Slope Length (<2%)	600 Feet (183 m)	750 Feet (229 m)	1,00 Feet (305 m)	1,300 Feet (305 m)	1,650 Feet (500 m)
Hydraulic Flow Through Rate	7.5 gpm/ft (941 l/m/m)	11.3 gpm/ft (141 l/m/m)	15.0 gpm/ft (188 l/m/m)	22.5 gpm/ft (281 l/m/m)	30.0 gpm/ft (374 l/m/m)

MAINTENANCE:

1. Inspect Silt sock/wattle weekly and after each rain of 1 inch or greater. Remove accumulated sediment and any debris as needed to allow for adequate flow.
2. Silt sock/Wattle must be replaced if clogged or torn.
3. If ponding becomes excessive, the silt sock/wattle may need to be replaced with a larger diameter or a different measure.
4. Reinstall if damaged or dislodged.
5. Silt socks/Wattles shall be inspected until land disturbance is compete and the area above the measure has been permanently stabilized.

NORTH CAROLINA
Environmental Quality
EFFECTIVE DATE: 11/12/2020

SILT SOCK / WATTLE FOR PERIMETER AND INLET PROTECTION

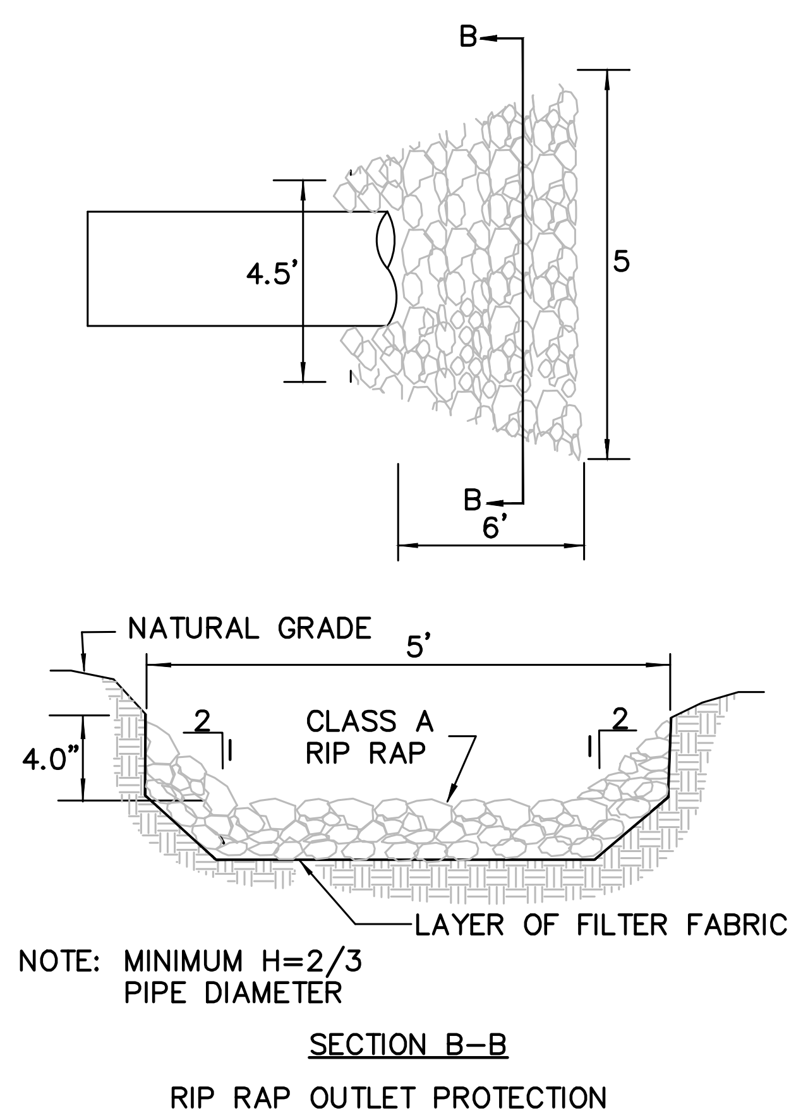
B
4.5'
5
B
6'
NATURAL GRADE
5'
4.0"
2
1
CLASS A RIP RAP
LAYER OF FILTER FABRIC
NOTE: MINIMUM H=2/3 PIPE DIAMETER
SECTION B-B

RIP RAP OUTLET PROTECTION

NOTES:

1. 5' W X 6' L, 9" THICK CLASS B RIP RAP.
2. RIPRAP SHOULD EXTEND UP BOTH SIDES OF THE APRON AND AROUND THE END OF THE PIPE OR CULVERT AT THE DISCHARGE OUTLET AT A MAXIMUM SLOPE OF 2:1 AND A HEIGHT NOT LESS THAN TWO THIRDS THE PIPE DIAMETER OR CULVERT HEIGHT.
3. THERE SHALL BE NO OVERFLOW FROM THE END OF THE APRON TO THE SURFACE OF THE RECEIVING CHANNEL. THE AREA TO BE PAVED OR RIPRAPPED SHALL BE UNDERCUT SO THAT THE INVERT OF THE APRON SHALL BE AT THE SAME GRADE (FLUSH) WITH THE SURFACE OF THE RECEIVING CHANNEL. THE APRON SHALL HAVE A CUTOFF OR TOE WALL AT THE DOWNSTREAM END.
4. THE WIDTH OF THE END OF THE APRON SHALL BE EQUAL TO THE BOTTOM WIDTH OF THE RECEIVING CHANNEL. MAXIMUM TAPER TO RECEIVING CHANNEL 5:1
5. ALL SUBGRADE FOR STRUCTURE TO BE COMPACTED TO 95% OR GREATER.
6. THE PLACING OF FILL, EITHER LOOSE OR COMPACTED IN THE RECEIVING CHANNEL SHALL NOT BE ALLOWED.
7. NO BENDS OR CURVES IN THE HORIZONTAL ALIGNMENT OF THE APRON WILL BE PERMITTED.
8. RIP RAP APRON SHALL BE EXTENDED AS POND EXCAVATION CONTINUES AND DEPTH INCREASES.

RIPRAP PIPE OUTLET PROTECTION

NOT TO SCALE

1

Temporary Diversion Calculations							
Drain Area	C	i	A	Flow (cfs)			
A	0.45	7.94	2.75	9.82575			
B	0.45	7.94	0.9	3.2157			
C	0.45	7.94	5.82	20.79486			
Temporary Diversion	**Length(ft)**	**Depth(ft)**	**Slope**	**V(ft/s)**	**Vp(ft/s) Bare Soil**	**Liner Required**	
A	703	1.5	0.007	6.198	2.000	Y; V>Vp	
B	514	1.5	0.010	7.249	2.000	Y; V>Vp	
C	737	1.5	0.007	6.054	2.000	Y; V>Vp	
Design Check							
Temporary Diversion	**Length(ft)**	**Depth(ft)**	**Slope**	**V(ft/s)**	**Tc(lb/ft^2)**	**Liner Used**	
A	703	1.5	0.007	5.635	0.666	RECP	
B	514	1.5	0.010	6.590	0.911	RECP	
C	737	1.5	0.007	6.054	0.635	RECP	
Permissible Unit Shear Stress Double Coconut RECP-2.0 (lb/ft2) max. Shear Stress Allowed							
2	TRUE						
2	TRUE						
2	TRUE						
Equations							
V(ft/s)=	$(1.49/n)xR_h^{.67}xS^{.5}$		**Diversion Dimensions (Minimum)**				
T_c=	YxDxS			**Depth**	**Bottom Width**	**Side Slope**	
n=	0.02; .033			1.5	2	2:1	

1

Attachment 1
Samet - Harnett Ph1
Skimmer Basin Calculations
10y 5MIN storm

Sedimentation and Erosion Control
Peak Flow (10yr, 5min)

Q10=CiA	36.8019	
i	7.94	10yr 5min storm
Acreage	10.3	
Mannings	0.45	

Requirements:			
Min. Volume (1,800 cf/Ac.)		18,540	cf
Min. Surface Area (325sf/cfs)		11,961	sf

ELEV	AREA (sq. ft.)	DEPTH (ft)	AVG END INC. VOL. (cu. ft.)	AVG END TOTAL VOL. (cu. ft.)	
166	12,910	0			
167	14,977	1	13,944	13,944	
168	17,189	1	16,083	30,028	
169	19,543	1	18,366	48,394	
170	22,041	1	20,793	69,184	
171	24,683	1	23,363	92,549	
172	27,469	1	26,077	118,626	
173	30,398	1	28,934	147,560	
174	33,470	1	31,935	179,495	
175	36,639	1	35,055	214,550	
176	39,864	1	38,252	252,802	
177	43,146	1	41,506	294,308	
178	46,484	1	44,816	339,123	Skimmer Discharge Elevation
179	49,879	1	48,182	387,306	
180	53,331	1	51,605	438,911	Primary Spillway Elevation
181	60,403	1	56,867	495,778	
182	64,024	1	62,214	557,992	
183	67,702	1	65,863	623,856	

Spillway Information

Skimmer Elevation:	178.00	
Primary Spillway	182.00	
Proposed Sediment Storage Elevation:	170.00	
Volume at Proposed Elevation:	69,184	cf
Surface Area at Proposed Elevation:	22,041	sf

Skimmer Design:

Volume:	18,540	cf
Days to Drain:	3	
Skimmer Size(faircloth guidelines):	2	in
Orifice Size (Dia.):	2.4	in

Spillway Check

Weir Flow	Qprovided (cfs)	Q10 (cfs)
Q=CLH^1.5	122.3520127	>19.51
C	3.33	
L	20	ft
H	1.5	ft

Date: Page:

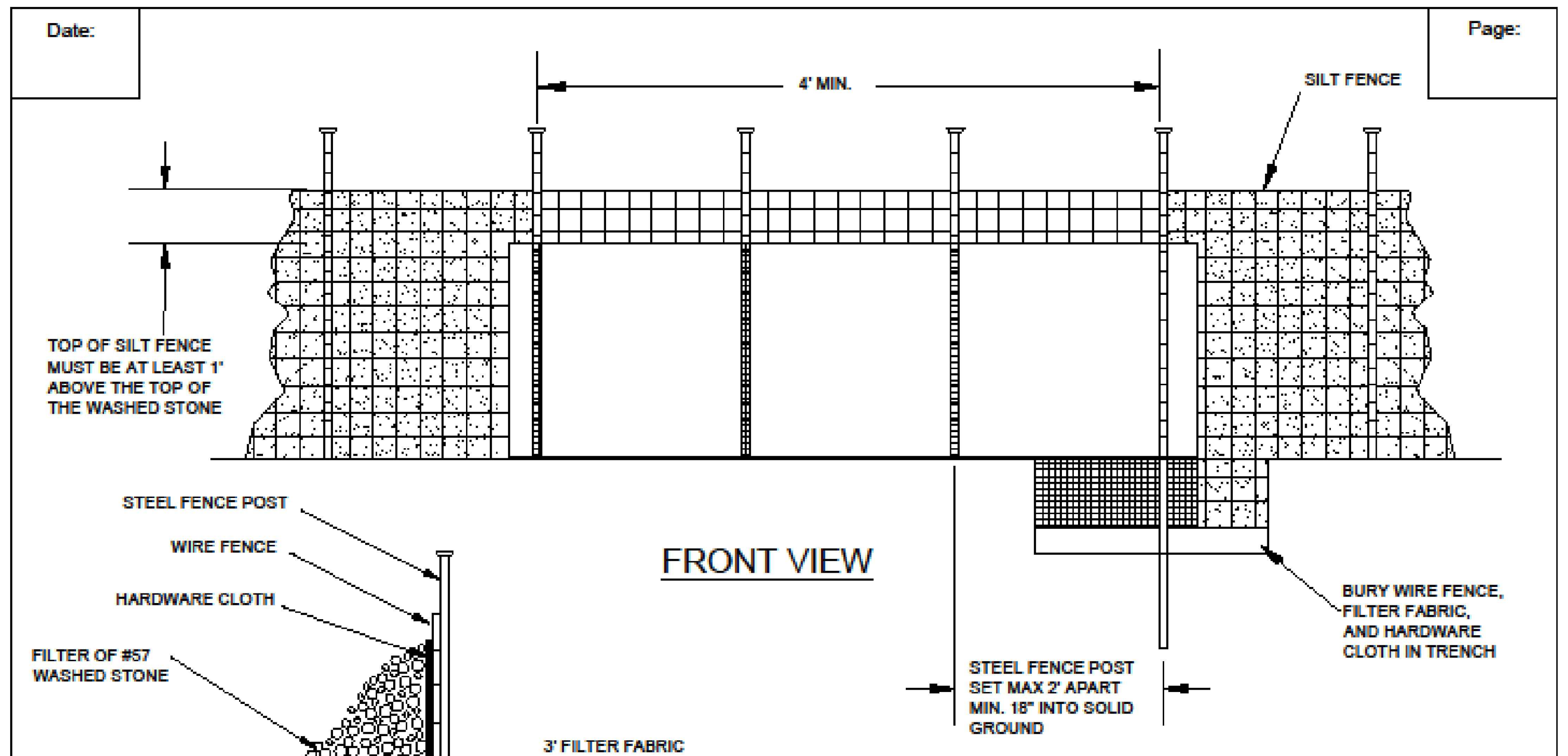
4' MIN.
SILT FENCE
TOP OF SILT FENCE MUST BE AT LEAST 1' ABOVE THE TOP OF THE WASHED STONE
STEEL FENCE POST
WIRE FENCE
HARDWARE CLOTH
FILTER OF #57 WASHED STONE
FRONT VIEW
BURY WIRE FENCE, FILTER FABRIC, AND HARDWARE CLOTH IN TRENCH
STEEL FENCE POST SET MAX 2' APART MIN. 18" INTO SOLID GROUND

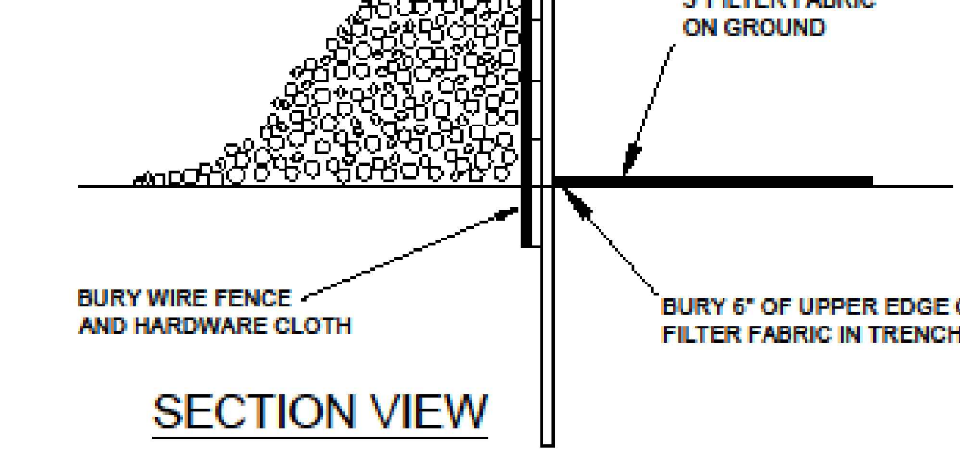
3' FILTER FABRIC ON GROUND
BURY WIRE FENCE AND HARDWARE CLOTH
BURY 6" OF UPPER EDGE OF FILTER FABRIC IN TRENCH
SECTION VIEW

NOTES:

1. Hardware cloth and gravel should overlay the silt fence at least 12 inches.
2. Stone outlets should be placed on low elevation areas of silt fence and based on field conditions.

MAINTENANCE:

1. Per NCG-01, inspect outlet at lest once a week and after each 1 inch or greater rainfall event. Complete any required repairs immediately. Freshen stone when sediment accumulation exceeds 6 inches. Keep mesh free of debris to provide adequate flow.
2. Remove sediment when half of stone outlet is covered.
3. Replace stone as needed to facilitate de-watering.

NORTH CAROLINA
Environmental Quality
EFFECTIVE DATE: 11/12/2020

SILT FENCE OUTLET

Date: Page:

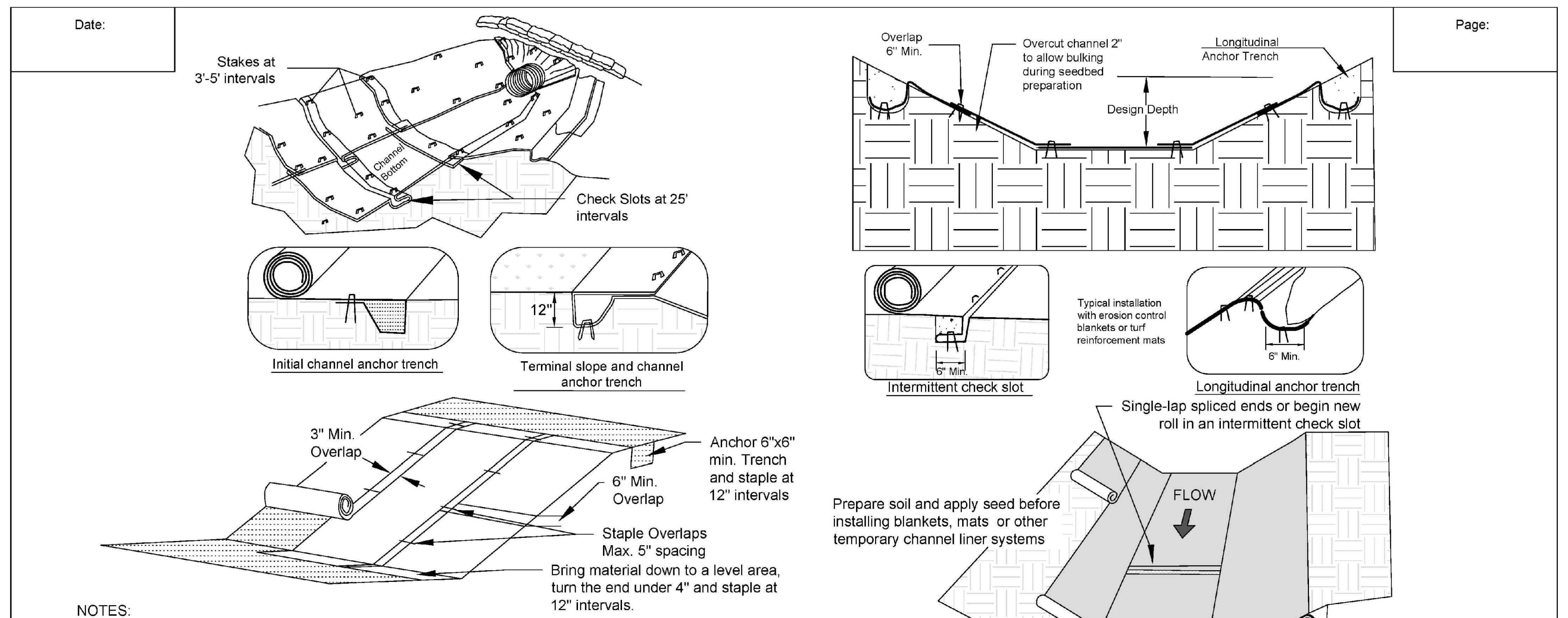
Stakes at 3'-5' intervals
Check Slots at 25' intervals
Initial channel anchor trench
Terminal slope and channel anchor trench
12"
Overlap 6" Min.
Overcut channel 2' to allow bulking during seedbed preparation
Longitudinal Anchor Trench
Design Depth
Typical installation with erosion control blankets or turf reinforcement mats
Intermittent check slot
Longitudinal anchor trench
6" Min.
Single-lap spliced ends or begin new roll in an intermittent check slot
3" Min. Overlap
Anchor 6"x6" min. Trench and staple at 12" intervals
6" Min. Overlap
Staple Overlaps Max. 5" spacing
Bring material down to a level area, turn the end under 4" and staple at 12" intervals.
Prepare soil and apply seed before installing blankets, mats or other temporary channel liner systems
FLOW

NOTES:

1. Lime, fertilize and seed before installation. Planting of shrubs, trees, etc. should occur after installation.
2. Slope surface shall be smooth before placement for proper soil contact.
3. Design velocities exceeding 2 feet/second require temporary blankets, mats or similar liners to protect seed and soil until vegetation becomes established.
4. Terminal anchor trenches are required at RECP ends and intermittent check slots must be constructed across channels at 25 foot intervals.
5. Terminal anchor trenches should be a minimum of 12 inches in depth and 6 inches in width. Intermittent check slots should be 6 inches deep and 6 inches wide.
6. For installation on a slope, place RECP 2-3 feet over the top of the slope and into an excavated end trench measuring approximately 12 inches deep by 6 inches wide. Pin the RECP at 1 foot intervals along the bottom of the trench, backfill and compact. Unroll the RECP down the slope maintaining direct contact between the soil and RECP. Pin using staples or pins in a 3 feet center-to-center pattern.
7. 11 gauge, at least 6 inch by 1 inch staples or 12 inch minimum length wooden stakes are recommended for anchoring.
8. Grass-lined channels with design velocities exceeding 6 feet/second should include turf reinforcement mats
9. Check slots to be constructed per manufacturers specifications.
10. Staking or stapling layout per manufacturers specification.
11. If there is a berm at the top of slope, anchor upslope of the berm.
12. Do not stretch blankets/matting tight, allow the rolls to conform to any irregularities.
13. For slopes less than 3H:1V, rolls may be placed in horizontal strips.

MAINTENANCE:

1. Inspect Rolled Erosion Control Products at least weekly and after each rain of 1 inch or greater; repair immediately.
2. Good contact with the ground must be maintained, and erosion must not occur beneath the RECP.
3. Any areas of the RECP that are damaged or not in close contact with the ground shall be repaired and stapled.
4. If erosion occurs due to poorly controlled drainage, the problem shall be fixed and the eroded area protected.
5. Monitor and repair the RECP as necessary until ground cover is established.

NORTH CAROLINA
Environmental Quality
EFFECTIVE DATE: 11/12/2020

ROLLED EROSION CONTROL PRODUCTS (RECP)

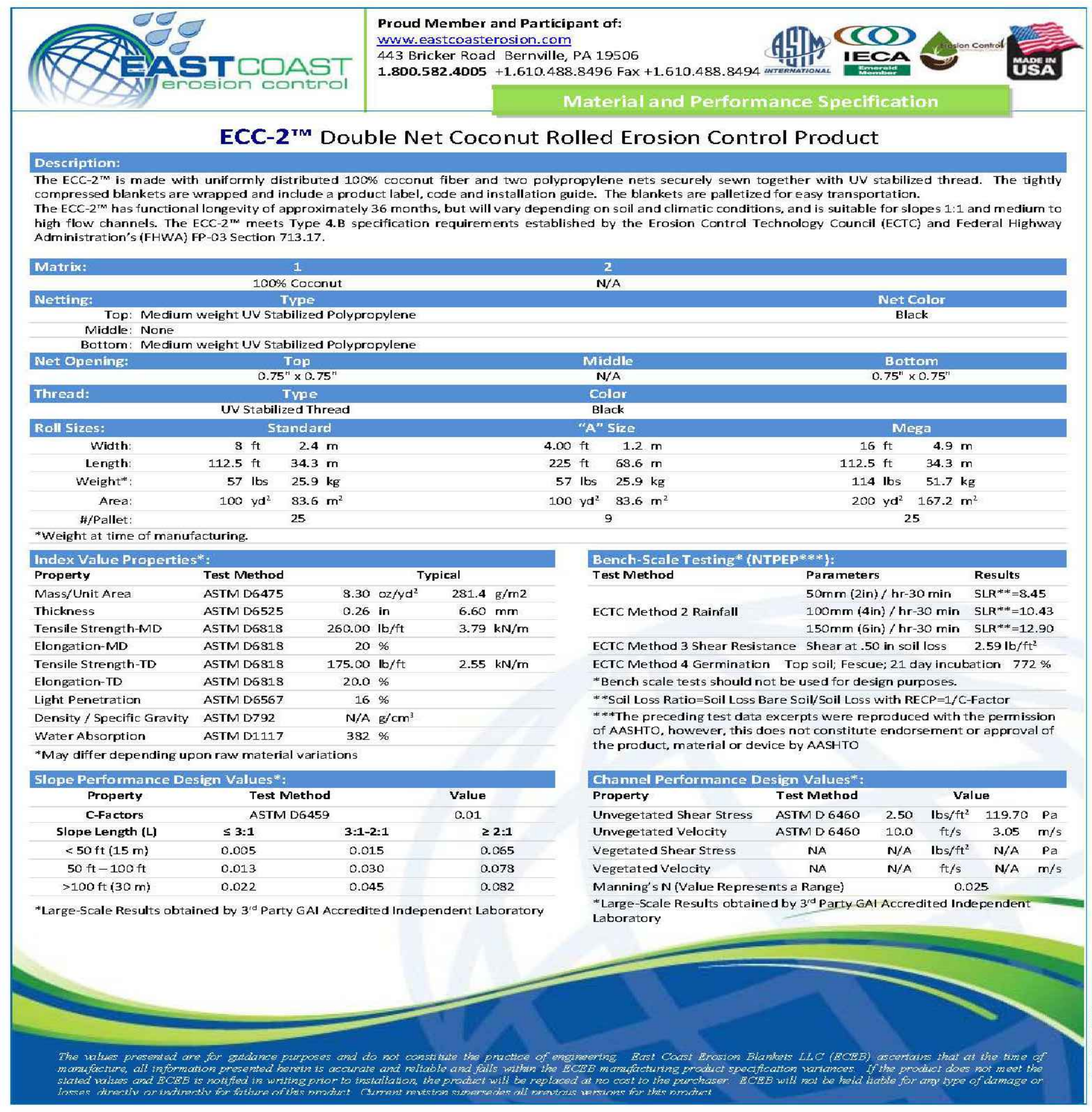

EAST COAST erosion control

Proud Member and Participant of:
www.eastcoasterosion.com
443 Bricker Road Bernville, PA 19506
1.800.582.4005 +1.610.488.8496 Fax +1.610.488.8494

Material and Performance Specification

ECC-2™ Double Net Coconut Rolled Erosion Control Product

Description:

The ECC-2™ is made with uniformly distributed 100% coconut fiber and two polypropylene nets securely sewn together with UV stabilized thread. The tightly compressed blankets are wrapped and include a product label, code and installation guide. The blankets are palletized for easy transportation.

The ECC-2™ has functional longevity of approximately 36 months, but will vary depending on soil and climatic conditions, and is suitable for slopes 1:1 and medium to high flow channels. The ECC-2™ meets Type 4.B specification requirements established by the Erosion Control Technology Council (ECTC) and Federal Highway Administration's (FHWA) FP-03 Section 713.17.

Matrix:	**1**	**2**	
	100% Coconut	N/A	
Netting:	**Type**		**Net Color**
Top:	Medium weight UV Stabilized Polypropylene		Black
Middle:	None		
Bottom:	Medium weight UV Stabilized Polypropylene		
Net Opening:	**Top**	**Middle**	**Bottom**
	0.75" x 0.75"	N/A	0.75" x 0.75"
Thread:	**Type**	**Color**	
	UV Stabilized Thread	Black	
Roll Sizes:	**Standard**	**"A" Size**	**Mega**
Width:	8 ft 2.4 m	4.00 ft 1.2 m	16 ft 4.9 m
Length:	112.5 ft 34.3 m	225 ft 68.6 m	112.5 ft 34.3 m
Weight*:	57 lbs 25.9 kg	57 lbs 25.9 kg	114 lbs 51.7 kg
Area:	100 yd^2 83.6 m^2	100 yd^2 83.6 m^2	200 yd^2 167.2 m^2
#/Pallet:	25	9	25

*Weight at time of manufacturing.

Index Value Properties*:

Property	Test Method	Typical	
Mass/Unit Area	ASTM D6475	8.30 oz/yd^2	281.4 g/m2
Thickness	ASTM D6525	0.26 in	6.60 mm
Tensile Strength-MD	ASTM D6818	260.00 lb/ft	3.79 kN/m
Elongation-MD	ASTM D6818	20 %	
Tensile Strength-TD	ASTM D6818	175.00 lb/ft	2.55 kN/m
Elongation-TD	ASTM D6818	20.0 %	
Light Penetration	ASTM D6567	16 %	
Density / Specific Gravity	ASTM D792	N/A g/cm^3	
Water Absorption	ASTM D1117	382 %	

*May differ depending upon raw material variations

Bench-Scale Testing* (NTPEP*):**

Test Method	Parameters	Results
ECTC Method 2 Rainfall	50mm (2in) / hr-30 min	SLR**=8.45
	100mm (4in) / hr-30 min	SLR**=10.43
	150mm (6in) / hr-30 min	SLR**=12.90
ECTC Method 3 Shear Resistance	Shear at .50 in soil loss	2.59 lb/ft^2
ECTC Method 4 Germination	Top soil; Fescue; 21 day incubation	772 %

*Bench scale tests should not be used for design purposes.
**Soil Loss Ratio=Soil Loss Bare Soil/Soil Loss with RECP=1/C-Factor
***The preceding test data excerpts were reproduced with the permission of AASHTO, however, this does not constitute endorsement or approval of the product, material or device by AASHTO

Slope Performance Design Values*:

Property	Test Method		Value
C-Factors	ASTM D6459		0.01
Slope Length (L)	≤ 3:1	3:1-2:1	≥ 2:1
< 50 ft (15 m)	0.005	0.015	0.065
50 ft – 100 ft	0.013	0.030	0.078
>100 ft (30 m)	0.022	0.045	0.082

*Large-Scale Results obtained by 3rd Party GAI Accredited Independent Laboratory

Channel Performance Design Values*:

Property	Test Method	Value			
Unvegetated Shear Stress	ASTM D 6460	2.50	lbs/ft^2	119.70	Pa
Unvegetated Velocity	ASTM D 6460	10.0	ft/s	3.05	m/s
Vegetated Shear Stress	NA	N/A	lbs/ft^2	N/A	Pa
Vegetated Velocity	NA	N/A	ft/s	N/A	m/s
Manning's N (Value Represents a Range)		0.025			

*Large-Scale Results obtained by 3rd Party GAI Accredited Independent Laboratory

The values presented are for guidance purposes and do not constitute the practice of engineering. East Coast Erosion Blankets LLC (ECEB) ascertains that at the time of manufacture, all information presented herein is accurate and reliable and falls within the ECEB manufacturing product specification variances. If the product does not meet the stated values and ECEB is notified in writing prior to installation, the product will be replaced at no cost to the purchaser. ECEB will not be held liable for any type of damage or losses directly or indirectly for failure of this product. Current revision supersedes all previous versions for this product.

Revised 01/01/2020

TC^2
ENGINEERING, PLLC
201 N. Front Street
Suite M-108
Wilmington, NC 28401
910-547-5856

NO.	REVISION	DATE
1	REVISED PER DEQ COMMENT	7/17/25

SAMET HARNETT COUNTY 1

EROSION AND SEDIMENT CONTROL DETAILS

ORIGINAL MAP SIZE
24" X 36"
DRAWN: BPE
CHECKED: WPC
PROJECT NO.:

SHEET:
EC2.1

PART III
SELF-INSPECTION, RECORDKEEPING AND REPORTING

SECTION A: SELF-INSPECTION

Self-inspections are required during normal business hours in accordance with the table below. When adverse weather or site conditions would cause the safety of the inspection personnel to be in jeopardy, the inspection may be delayed until the next business day on which it is safe to perform the inspection. In addition, when a storm event of equal to or greater than 1.0 inch occurs outside of normal business hours, the self-inspection shall be performed upon the commencement of the next business day. Any time when inspections were delayed shall be noted in the Inspection Record.

Inspect	Frequency (during normal business hours)	Inspection records must include:
(1) Rain gauge maintained in good working order	Daily	Daily rainfall amounts. If no daily rain gauge observations are made during weekend or holiday periods, and no individual-day rainfall information is available, record the cumulative rain measurement for those unattended days (and this will determine if a site inspection is needed). Days on which no rainfall occurred shall be recorded as "zero." The permittee may use another rain-monitoring device approved by the Division.
(2) E&SC Measures	At least once per 7 calendar days and within 24 hours of a rain event ≥ 1.0 inch in 24 hours	1. Identification of the measures inspected, 2. Date and time of the inspection, 3. Name of the person performing the inspection, 4. Indication of whether the measures were operating properly, 5. Description of maintenance needs for the measure, 6. Description, evidence, and date of corrective actions taken.
(3) Stormwater discharge outfalls (SDOs)	At least once per 7 calendar days and within 24 hours of a rain event ≥ 1.0 inch in 24 hours	1. Identification of the discharge outfalls inspected, 2. Date and time of the inspection, 3. Name of the person performing the inspection, 4. Evidence of indicators of stormwater pollution such as oil sheen, floating or suspended solids or discoloration, 5. Indication of visible sediment leaving the site, 6. Description, evidence, and date of corrective actions taken.
(4) Perimeter of site	At least once per 7 calendar days and within 24 hours of a rain event ≥ 1.0 inch in 24 hours	If visible sedimentation is found outside site limits, then a record of the following shall be made: 1. Actions taken to clean up or stabilize the sediment that has left the site limits, 2. Description, evidence, and date of corrective actions taken, and 3. An explanation as to the actions taken to control future releases.
(5) Streams or wetlands onsite or offsite (where accessible)	At least once per 7 calendar days and within 24 hours of a rain event ≥ 1.0 inch in 24 hours	If the stream or wetland has increased visible sedimentation or a stream has visible increased turbidity from the construction activity, then a record of the following shall be made: 1. Description, evidence and date of corrective actions taken, and 2. Records of the required reports to the appropriate Division Regional Office per Part III, Section C, Item (2)(a) of this permit.
(6) Ground stabilization measures	After each phase of grading	1. The phase of grading (installation of perimeter E&SC measures, clearing and grubbing, installation of storm drainage facilities, completion of all land-disturbing activity, construction or redevelopment, permanent ground cover). 2. Documentation that the required ground stabilization measures have been provided within the required timeframe or an assurance that they will be provided as soon as possible.

NOTE: The rain inspection resets the required 7 calendar day inspection requirement.

PART III
SELF-INSPECTION, RECORDKEEPING AND REPORTING

SECTION B: RECORDKEEPING

1. E&SC Plan Documentation

The approved E&SC plan as well as any approved deviation shall be kept on the site. The approved E&SC plan must be kept up-to-date throughout the coverage under this permit. The following items pertaining to the E&SC plan shall be kept on site and available for inspection at all times during normal business hours.

Item to Document	Documentation Requirements
(a) Each E&SC measure has been installed and does not significantly deviate from the locations, dimensions and relative elevations shown on the approved E&SC plan.	Initial and date each E&SC measure on a copy of the approved E&SC plan or complete, date and sign an inspection report that lists each E&SC measure shown on the approved E&SC plan. This documentation is required upon the initial installation of the E&SC measures or if the E&SC measures are modified after initial installation.
(b) A phase of grading has been completed.	Initial and date a copy of the approved E&SC plan or complete, date and sign an inspection report to indicate completion of the construction phase.
(c) Ground cover is located and installed in accordance with the approved E&SC plan.	Initial and date a copy of the approved E&SC plan or complete, date and sign an inspection report to indicate compliance with approved ground cover specifications.
(d) The maintenance and repair requirements for all E&SC measures have been performed.	Complete, date and sign an inspection report.
(e) Corrective actions have been taken to E&SC measures.	Initial and date a copy of the approved E&SC plan or complete, date and sign an inspection report to indicate the completion of the corrective action.

site and available for inspectors at all times during normal business hours, unless the Division provides a site-specific exemption based on unique site conditions that make this requirement not practical:

(a) This General Permit as well as the Certificate of Coverage, after it is received.

(b) Records of inspections made during the previous twelve months. The permittee shall record the required observations on the Inspection Record Form provided by the Division or a similar inspection form that includes all the required elements. Use of electronically-available records in lieu of the required paper copies will be allowed if shown to provide equal access and utility as the hard-copy records.

3. Documentation to be Retained for Three Years

All data used to complete the e-NOI and all inspection records shall be maintained for a period of three years after project completion and made available upon request. [40 CFR 122.41]

PART III
SELF-INSPECTION, RECORDKEEPING AND REPORTING

SECTION C: REPORTING

1. Occurrences that Must be Reported

Permittees shall report the following occurrences:

(a) Visible sediment deposition in a stream or wetland.

(b) Oil spills if:

- They are 25 gallons or more,
- They are less than 25 gallons but cannot be cleaned up within 24 hours,
- They cause sheen on surface waters (regardless of volume), or
- They are within 100 feet of surface waters (regardless of volume).

(c) Releases of hazardous substances in excess of reportable quantities under Section 311 of the Clean Water Act (Ref: 40 CFR 110.3 and 40 CFR 117.3) or Section 102 of CERCLA (Ref: 40 CFR 302.4) or G.S. 143-215.85.

(d) Anticipated bypasses and unanticipated bypasses.

(e) Noncompliance with the conditions of this permit that may endanger health or the environment.

2. Reporting Timeframes and Other Requirements

After a permittee becomes aware of an occurrence that must be reported, he shall contact the appropriate Division regional office within the timeframes and in accordance with the other requirements listed below. Occurrences outside normal business hours may also be reported to the Department's Environmental Emergency Center personnel at (800) 858-0368.

Occurrence	Reporting Timeframes (After Discovery) and Other Requirements
(a) Visible sediment deposition in a stream or wetland	• ***Within 24 hours***, an oral or electronic notification. • ***Within 7 calendar days***, a report that contains a description of the sediment and actions taken to address the cause of the deposition. Division staff may waive the requirement for a written report on a case-by-case basis. • If the stream is named on the NC 303(d) list as impaired for sediment-related causes, the permittee may be required to perform additional monitoring, inspections or apply more stringent practices if staff determine that additional requirements are needed to assure compliance with the federal or state impaired-waters conditions.
(b) Oil spills and release of hazardous substances per Item 1(b)-(c) above	• ***Within 24 hours***, an oral or electronic notification. The notification shall include information about the date, time, nature, volume and location of the spill or release.
(c) Anticipated bypasses [40 CFR 122.41(m)(3)]	• ***A report at least ten days before the date of the bypass, if possible***. The report shall include an evaluation of the anticipated quality and effect of the bypass.
(d) Unanticipated bypasses [40 CFR 122.41(m)(3)]	• ***Within 24 hours***, an oral or electronic notification. • ***Within 7 calendar days,*** a report that includes an evaluation of the quality and effect of the bypass.
(e) Noncompliance with the conditions of this permit that may endanger health or the environment[40 CFR 122.41(l)(7)]	• ***Within 24 hours***, an oral or electronic notification. • ***Within 7 calendar days***, a report that contains a description of the noncompliance, and its causes; the period of noncompliance, including exact dates and times, and if the noncompliance has not been corrected, the anticipated time noncompliance is expected to continue; and steps taken or planned to reduce, eliminate, and prevent reoccurrence of the noncompliance. [40 CFR 122.41(l)(6). • Division staff may waive the requirement for a written report on a case-by-case basis.

PART II, SECTION G, ITEM (4)
DRAW DOWN OF SEDIMENT BASINS FOR MAINTENANCE OR CLOSE OUT

Sediment basins and traps that receive runoff from drainage areas of one acre or more shall use outlet structures that withdraw water from the surface when these devices need to be drawn down for maintenance or close out unless this is infeasible. The circumstances in which it is not feasible to withdraw water from the surface shall be rare (for example, times with extended cold weather). Non-surface withdrawals from sediment basins shall be allowed only when all of the following criteria have been met:

(a) The E&SC plan authority has been provided with documentation of the non-surface withdrawal and the specific time periods or conditions in which it will occur. The non-surface withdrawal shall not commence until the E&SC plan authority has approved these items,
(b) The non-surface withdrawal has been reported as an anticipated bypass in accordance with Part III, Section C, Item (2)(c) and (d) of this permit,
(c) Dewatering discharges are treated with controls to minimize discharges of pollutants from stormwater that is removed from the sediment basin. Examples of appropriate controls include properly sited, designed and maintained dewatering tanks, weir tanks, and filtration systems,
(d) Vegetated, upland areas of the sites or a properly designed stone pad is used to the extent feasible at the outlet of the dewatering treatment devices described in Item (c) above,
(e) Velocity dissipation devices such as check dams, sediment traps, and riprap are provided at the discharge points of all dewatering devices, and
(f) Sediment removed from the dewatering treatment devices described in Item (c) above is disposed of in a manner that does not cause deposition of sediment into waters of the United States.

NCG01 SELF-INSPECTION, RECORDKEEPING AND REPORTING

EFFECTIVE: 04/01/19

TC^2
ENGINEERING, PLLC
201 N. Front Street
Suite M-108
Wilmington, NC 28401
910-547-5856

NO.	REVISION	DATE

SAMET HARNETT COUNTY 1
EROSION AND SEDIMENT CONTROL DETAILS

PRELIMINARY

ORIGINAL MAP SIZE
24" X 36"
DRAWN: BPE
CHECKED: WPC
PROJECT NO.:

SHEET:
EC2.2

GROUND STABILIZATION AND MATERIALS HANDLING PRACTICES FOR COMPLIANCE WITH THE NCG01 CONSTRUCTION GENERAL PERMIT

Implementing the details and specifications on this plan sheet will result in the construction activity being considered compliant with the Ground Stabilization and Materials Handling sections of the NCG01 Construction General Permit (Sections E and F, respectively). The permittee shall comply with the Erosion and Sediment Control plan approved by the delegated authority having jurisdiction. All details and specifications shown on this sheet may not apply depending on site conditions and the delegated authority having jurisdiction.

SECTION E: GROUND STABILIZATION

Required Ground Stabilization Timeframes

Site Area Description	Stabilize within this many calendar days after ceasing land disturbance	Timeframe variations
(a) Perimeter dikes, swales, ditches, and perimeter slopes	7	None
(b) High Quality Water (HQW) Zones	7	None
(c) Slopes steeper than 3:1	7	If slopes are 10' or less in length and are not steeper than 2:1, 14 days are allowed
(d) Slopes 3:1 to 4:1	14	-7 days for slopes greater than 50' in length and with slopes steeper than 4:1 -7 days for perimeter dikes, swales, ditches, perimeter slopes and HQW Zones -10 days for Falls Lake Watershed
(e) Areas with slopes flatter than 4:1	14	-7 days for perimeter dikes, swales, ditches, perimeter slopes and HQW Zones -10 days for Falls Lake Watershed unless there is zero slope

Note: After the permanent cessation of construction activities, any areas with temporary ground stabilization shall be converted to permanent ground stabilization as soon as practicable but in no case longer than 90 calendar days after the last land disturbing activity. Temporary ground stabilization shall be maintained in a manner to render the surface stable against accelerated erosion until permanent ground stabilization is achieved.

GROUND STABILIZATION SPECIFICATION

Stabilize the ground sufficiently so that rain will not dislodge the soil. Use one of the techniques in the table below:

Temporary Stabilization	Permanent Stabilization
• Temporary grass seed covered with straw or other mulches and tackifiers • Hydroseeding • Rolled erosion control products with or without temporary grass seed • Appropriately applied straw or other mulch • Plastic sheeting	• Permanent grass seed covered with straw or other mulches and tackifiers • Geotextile fabrics such as permanent soil reinforcement matting • Hydroseeding • Shrubs or other permanent plantings covered with mulch • Uniform and evenly distributed ground cover sufficient to restrain erosion • Structural methods such as concrete, asphalt or retaining walls • Rolled erosion control products with grass seed

POLYACRYLAMIDES (PAMS) AND FLOCCULANTS

1. Select flocculants that are appropriate for the soils being exposed during construction, selecting from the *NC DWR List of Approved PAMS/Flocculants*.
2. Apply flocculants at or before the inlets to Erosion and Sediment Control Measures.
3. Apply flocculants at the concentrations specified in the *NC DWR List of Approved PAMS/Flocculants* and in accordance with the manufacturer's instructions.
4. Provide ponding area for containment of treated Stormwater before discharging offsite.
5. Store flocculants in leak-proof containers that are kept under storm-resistant cover or surrounded by secondary containment structures.

EQUIPMENT AND VEHICLE MAINTENANCE

1. Maintain vehicles and equipment to prevent discharge of fluids.
2. Provide drip pans under any stored equipment.
3. Identify leaks and repair as soon as feasible, or remove leaking equipment from the project.
4. Collect all spent fluids, store in separate containers and properly dispose as hazardous waste (recycle when possible).
5. Remove leaking vehicles and construction equipment from service until the problem has been corrected.
6. Bring used fuels, lubricants, coolants, hydraulic fluids and other petroleum products to a recycling or disposal center that handles these materials.

LITTER, BUILDING MATERIAL AND LAND CLEARING WASTE

1. Never bury or burn waste. Place litter and debris in approved waste containers.
2. Provide a sufficient number and size of waste containers (e.g dumpster, trash receptacle) on site to contain construction and domestic wastes.
3. Locate waste containers at least 50 feet away from storm drain inlets and surface waters unless no other alternatives are reasonably available.
4. Locate waste containers on areas that do not receive substantial amounts of runoff from upland areas and does not drain directly to a storm drain, stream or wetland.
5. Cover waste containers at the end of each workday and before storm events or provide secondary containment. Repair or replace damaged waste containers.
6. Anchor all lightweight items in waste containers during times of high winds.
7. Empty waste containers as needed to prevent overflow. Clean up immediately if containers overflow.
8. Dispose waste off-site at an approved disposal facility.
9. On business days, clean up and dispose of waste in designated waste containers.

PAINT AND OTHER LIQUID WASTE

1. Do not dump paint and other liquid waste into storm drains, streams or wetlands.
2. Locate paint washouts at least 50 feet away from storm drain inlets and surface waters unless no other alternatives are reasonably available.
3. Contain liquid wastes in a controlled area.
4. Containment must be labeled, sized and placed appropriately for the needs of site.
5. Prevent the discharge of soaps, solvents, detergents and other liquid wastes from construction sites.

PORTABLE TOILETS

1. Install portable toilets on level ground, at least 50 feet away from storm drains, streams or wetlands unless there is no alternative reasonably available. If 50 foot offset is not attainable, provide relocation of portable toilet behind silt fence or place on a gravel pad and surround with sand bags.
2. Provide staking or anchoring of portable toilets during periods of high winds or in high foot traffic areas.
3. Monitor portable toilets for leaking and properly dispose of any leaked material. Utilize a licensed sanitary waste hauler to remove leaking portable toilets and replace with properly operating unit.

EARTHEN STOCKPILE MANAGEMENT

1. Show stockpile locations on plans. Locate earthen-material stockpile areas at least 50 feet away from storm drain inlets, sediment basins, perimeter sediment controls and surface waters unless it can be shown no other alternatives are reasonably available.
2. Protect stockpile with silt fence installed along toe of slope with a minimum offset of five feet from the toe of stockpile.
3. Provide stable stone access point when feasible.
4. Stabilize stockpile within the timeframes provided on this sheet and in accordance with the approved plan and any additional requirements. Soil stabilization is defined as vegetative, physical or chemical coverage techniques that will restrain accelerated erosion on disturbed soils for temporary or permanent control needs.

ONSITE CONCRETE WASHOUT STRUCTURE WITH LINER

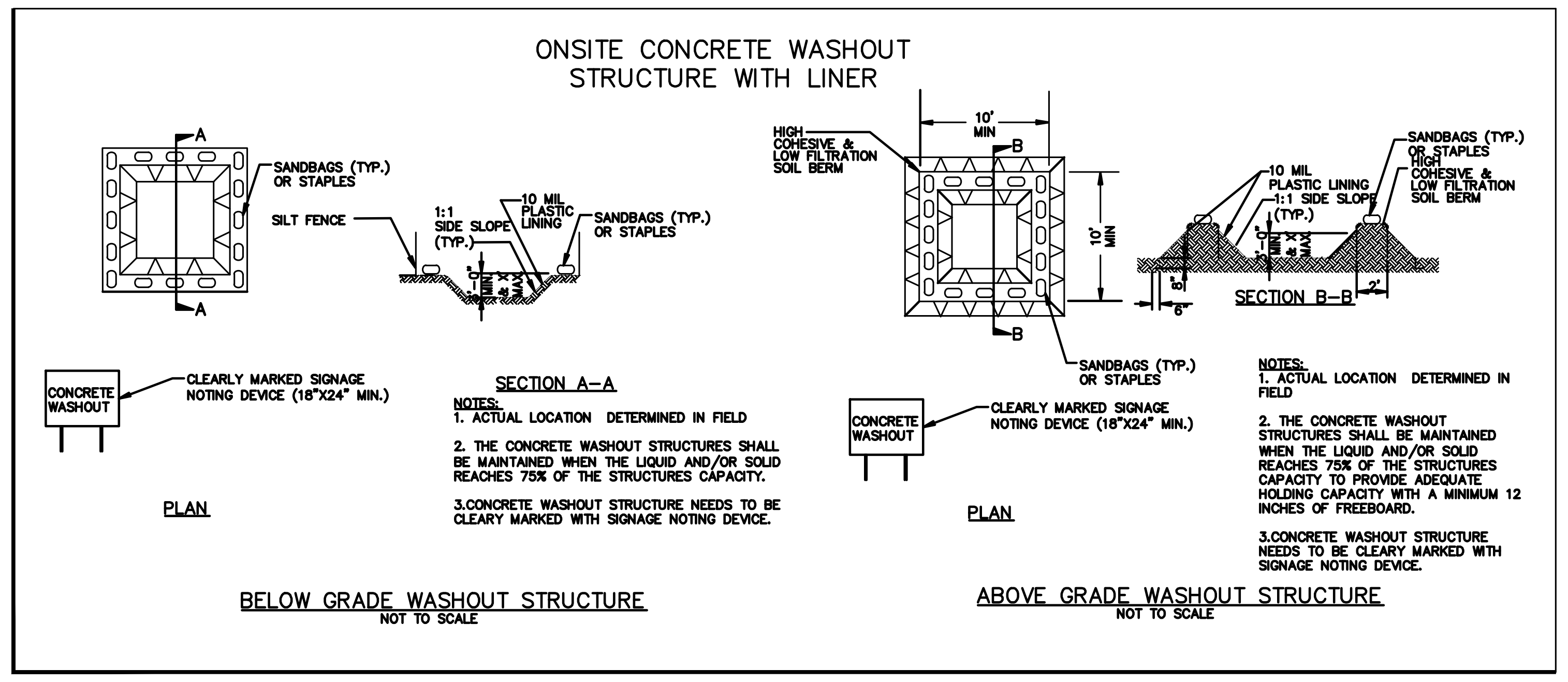
A
SANDBAGS (TYP.) OR STAPLES
SILT FENCE
1:1 SIDE SLOPE (TYP.)
10 MIL PLASTIC LINING
SANDBAGS (TYP.) OR STAPLES
3'-0" MIN & X MAX
CONCRETE WASHOUT
CLEARLY MARKED SIGNAGE NOTING DEVICE (18"X24" MIN.)
SECTION A–A
PLAN
HIGH COHESIVE & LOW FILTRATION SOIL BERM
10' MIN
10' MIN
B
SANDBAGS (TYP.) OR STAPLES
10 MIL PLASTIC LINING
1:1 SIDE SLOPE (TYP.)
HIGH COHESIVE & LOW FILTRATION SOIL BERM
3'-0" MIN & X MAX
8"
6"
2'
SECTION B–B
SANDBAGS (TYP.) OR STAPLES
CONCRETE WASHOUT
CLEARLY MARKED SIGNAGE NOTING DEVICE (18"X24" MIN.)
PLAN

NOTES:
1. ACTUAL LOCATION DETERMINED IN FIELD
2. THE CONCRETE WASHOUT STRUCTURES SHALL BE MAINTAINED WHEN THE LIQUID AND/OR SOLID REACHES 75% OF THE STRUCTURES CAPACITY.
3. CONCRETE WASHOUT STRUCTURE NEEDS TO BE CLEARY MARKED WITH SIGNAGE NOTING DEVICE.

BELOW GRADE WASHOUT STRUCTURE
NOT TO SCALE

NOTES:
1. ACTUAL LOCATION DETERMINED IN FIELD
2. THE CONCRETE WASHOUT STRUCTURES SHALL BE MAINTAINED WHEN THE LIQUID AND/OR SOLID REACHES 75% OF THE STRUCTURES CAPACITY TO PROVIDE ADEQUATE HOLDING CAPACITY WITH A MINIMUM 12 INCHES OF FREEBOARD.
3. CONCRETE WASHOUT STRUCTURE NEEDS TO BE CLEARY MARKED WITH SIGNAGE NOTING DEVICE.

ABOVE GRADE WASHOUT STRUCTURE
NOT TO SCALE

CONCRETE WASHOUTS

1. Do not discharge concrete or cement slurry from the site.
2. Dispose of, or recycle settled, hardened concrete residue in accordance with local and state solid waste regulations and at an approved facility.
3. Manage washout from mortar mixers in accordance with the above item and in addition place the mixer and associated materials on impervious barrier and within lot perimeter silt fence.
4. Install temporary concrete washouts per local requirements, where applicable. If an alternate method or product is to be used, contact your approval authority for review and approval. If local standard details are not available, use one of the two types of temporary concrete washouts provided on this detail.
5. Do not use concrete washouts for dewatering or storing defective curb or sidewalk sections. Stormwater accumulated within the washout may not be pumped into or discharged to the storm drain system or receiving surface waters. Liquid waste must be pumped out and removed from project.
6. Locate washouts at least 50 feet from storm drain inlets and surface waters unless it can be shown that no other alternatives are reasonably available. At a minimum, install protection of storm drain inlet(s) closest to the washout which could receive spills or overflow.
7. Locate washouts in an easily accessible area, on level ground and install a stone entrance pad in front of the washout. Additional controls may be required by the approving authority.
8. Install at least one sign directing concrete trucks to the washout within the project limits. Post signage on the washout itself to identify this location.
9. Remove leavings from the washout when at approximately 75% capacity to limit overflow events. Replace the tarp, sand bags or other temporary structural components when no longer functional. When utilizing alternative or proprietary products, follow manufacturer's instructions.
10. At the completion of the concrete work, remove remaining leavings and dispose of in an approved disposal facility. Fill pit, if applicable, and stabilize any disturbance caused by removal of washout.

HERBICIDES, PESTICIDES AND RODENTICIDES

1. Store and apply herbicides, pesticides and rodenticides in accordance with label restrictions.
2. Store herbicides, pesticides and rodenticides in their original containers with the label, which lists directions for use, ingredients and first aid steps in case of accidental poisoning.
3. Do not store herbicides, pesticides and rodenticides in areas where flooding is possible or where they may spill or leak into wells, stormwater drains, ground water or surface water. If a spill occurs, clean area immediately.
4. Do not stockpile these materials onsite.

HAZARDOUS AND TOXIC WASTE

1. Create designated hazardous waste collection areas on-site.
2. Place hazardous waste containers under cover or in secondary containment.
3. Do not store hazardous chemicals, drums or bagged materials directly on the ground.

NCG01 GROUND STABILIZATION AND MATERIALS HANDLING

EFFECTIVE: 04/01/19

TC^2
ENGINEERING, PLLC
201 N. Front Street
Suite M-108
Wilmington, NC 28401
910-547-5856

NO.	REVISION	DATE

SAMET HARNETT COUNTY 1
EROSION AND SEDIMENT CONTROL DETAILS

PRELIMINARY

ORIGINAL MAP SIZE
24" X 36"
DRAWN: BPE
CHECKED: WPC
PROJECT NO.:

SHEET:
EC2.3

EXTERIOR FINISH SCHEDULE

MARK	FINISH	MANUFACTURER / COLOR
F1	CONCRETE WALL PANELS ELASTOMETRIC PAINT (TEXTURE)	SHERWIN WILLIAMS / SIMPLE WHITE SW 7021
F2	CONCRETE WALL PANELS ELASTOMETRIC PAINT (TEXTURE)	SHERWIN WILLIAMS / ANEW GRAY SW 7030
F3	CONCRETE WALL PANELS ELASTOMETRIC PAINT (TEXTURE)	SHERWIN WILLIAMS / KEYSTONE GRAY SW 7504
F4	STOREFRONT	TBD
F5	HOLLOW METAL DOORS & FRAMES PRO INDUSTRIAL WATERBASED ALKYD URETHANE (SEMI-GLOSS)	SHERWIN WILLIAMS / KEYSTONE GRAY SW 7504
F6	CANOPY	TBD
F7	COPING/GUTTERS/DOWNSPOUTS	FACTORY FINISH
F8	STEEL PIPE BOLLARD PRO INDUSTRIAL WATERBASED ALKYD (SEMI-GLOSS)	SHERWIN WILLIAMS / OSHA YELLOW
F9	LADDERS / STAIRS / PIPE AND TUBE RAILING	NO PAINT
F10	DOCK DOORS	PREFINISHED - TBD
F11	DOCK LEVELERS	NO PAINT - LABEL AS REQUIRED
F12	EXTERIOR EXPOSED GAS PIPING	PAINT

NOTES:
1. ALL REVEALS TO BE PAINTED SAME AS ADJACENT FIELD COLOR (ABOVE OR BELOW) - MAINTAIN CONSISTENCY AROUND BUILDING.

PAINT SPECIFICATIONS

INTERIOR

PROVIDE SHERWIN WILLIAMS OR APPROVED EQUAL

WALLS - GWB:

1 COAT: SHERWIN WILLIAMS: PRO MAR 200 ZERO VOC INTERIOR LATEX PRIMER (WHITE)
2 COATS: SHERWIN WILLIAMS: PRO MAR 200 ZERO VOC INTERIOR LATEX (EGGSHELL)

WALLS - CMU:

1 COAT: SHERWIN WILLIAMS: PREPRITE INTERIOR / EXTERIOR BLOCK FILLER
2 COATS: SHERWIN WILLIAMS: PRO MAR 200 ZERO VOC INTERIOR LATEX (EGGSHELL)

CEILIINGS - GWB:

1 COAT: SHERWIN WILLIAMS: PRO MAR 200 ZERO VOC INTERIOR LATEX PRIMER (WHITE)
2 COATS: SHERWIN WILLIAMS: PRO MAR 200 ZERO VOC INTERIOR LATEX (FLAT)

HM DOORS / HM FRAMES:

PRIMER: SHERWIN WILLIAMS: PRO INDUSTRIAL PRO-CRYL UNIVERSAL PRIMER
(PRIME AS NEEDED)
2 COATS: SHERWIN WILLIAMS: PRO INDUSTRIAL WATERBASED ALKYD URETHANE (SEMI-GLOSS)

EXTERIOR

PRE-CAST PANELS:

1 COAT: SHERWIN WILLIAMS: LOXON CONCRETE & MASONRY PRIMER
2 COATS: SHERWIN WILLIAMS: MEDIUM TEXTURE

ACCENTS:
2 COATS: SHERWIN WILLIAMS: A-100 EXTERIOR ACRYLIC LATEX (SATIN)

BOLLARDS / DOWNSPOUT PROTECTOR PLATES:

PRIMER: SHERWIN WILLIAMS: PRO INDUSTRIAL PRO-CRYL UNIVERSAL PRIMER
(PRIME AS NEEDED)
2 COATS: SHERWIN WILLIAMS: PRO INDUSTRIAL WATERBASED ALKYD URETHANE (SEMI-GLOSS)

DOCK SILLS & DRIVE-IN DOOR ANGLE PLATES:

PRIMER: SHERWIN WILLIAMS: PRO INDUSTRIAL DTM ACRYLIC PRIMER / FINISH
(PRIME AS NEEDED)
2 COATS: SHERWIN WILLIAMS: PRO INDUSTRIAL DTM ACRYLIC (SEMI-GLOSS)

MECHANICAL EDGE OF DOCK LEVELER:

PRIMER: SHERWIN WILLIAMS: PRO INDUSTRIAL PRO-CRYL UNIVERSAL PRIMER
(PRIME AS NEEDED)
2 COATS: SHERWIN WILLIAMS: PRO INDUSTRIAL WATERBASED ALKYD URETHANE (SEMI-GLOSS)

REVEAL PROFILE

TYPE	DESCRIPTION	GRAPHIC
VERTICAL	1-1/2" X 3/4	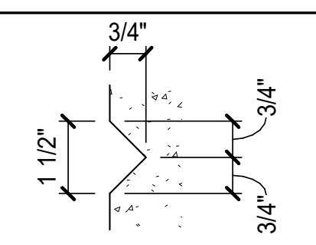
HORIZONTAL	3-1/2" X 3/4"	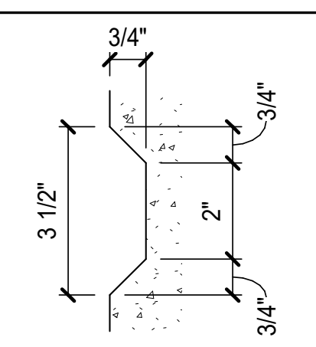 3/4" 3 1/2" 2" 3/4" 3/4"

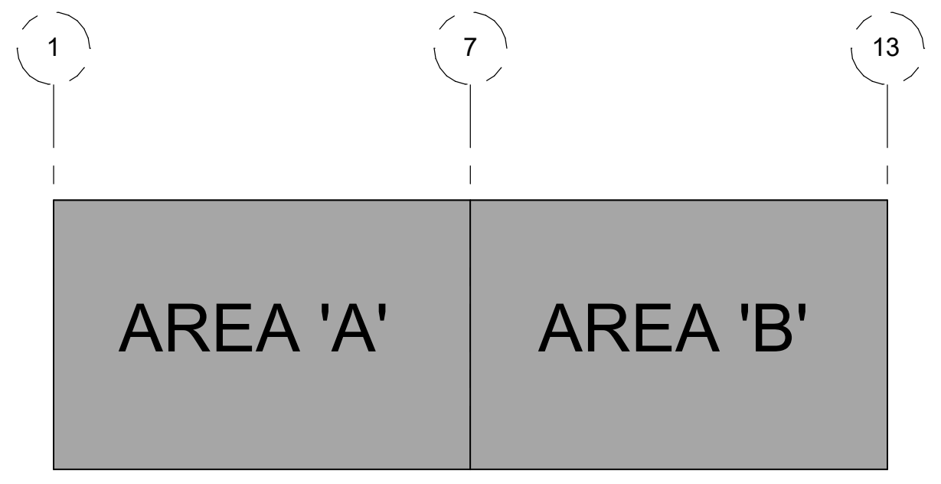

1
7
13
AREA 'A'
AREA 'B'

KEY PLAN

PAINT SCHEDULE

EXTERIOR

EXTERIOR STRUCTURAL / MISCELLANEOUS STEEL/ HOLLOW METAL ITEMS (HOLLOW METAL DOOR AND WINDOW FRAMES, BOLLARDS, LINTELS, EXPOSED GAS PIPING, WELD CONNECTIONS, STEEL EMBEDS, ETC.)
ALKYD SYSTEM
CLEAN/ SPOT PRIME, WHERE REQUIRED: UNIVERSAL METAL PRIMER
FIRST COAT: INDUSTRIAL ALKYD ENAMEL
FINAL COAT: INSUSTRIAL ALKYD ENAMEL (GLOSS)

EXTERIOR CONCRETE WALL PANELS:
"ULTRA-CRETE" OR "ELASTOMERIC" SYSTEM
PRESSURE WASH: COMPLETE EXTERIOR OF BUILDING TO BE PRESSURE WASHED PRIOR TO APPLICATION OF PRIMER.
PRIME COAT: COMPATIBLE WITH FINAL FINISH COAT (LOXON PRIMER)
FINAL COAT: MEDIUM TEXTURE

INTERIOR

STRUCTURAL / MISCELLANEOUS/ HOLLOW METAL STEEL ITEMS: (HOLLOW METAL DOOR AND WINDOW FRAMES, BOLLARDS, WELD CONNECTIONS AND EMBEDS, ETC.)

GALVANIZED - METAL SUBSTRATES: (INCLUDES GALVANIZED STEEL ITEMS AND EXPOSED GALVANIZED METAL DUCT)
LATEX SYSTEM
CLEAN: DEGREASE SUBSTRATE PRIOR TO PRIMER APPLICATION
PRIME COAT: DTM ACRYLIC PRIMER / FINISH
INTERMEDIATE COAT: DTM ACRYLIC COATING (GLOSS)
FINAL COAT: DTM ACRYLIC COATING (GLOSS)

CONCRETE BLOCK:
LATEX SYSTEM
PRIME COAT: HEAVY DITY BLOCK FILLER
INTERMEDIATE COAT: INTERIOR ALKYD MATCING FINALCOAT
FINAL COAT: INTERIOR ALKYD (SEMI-GLOSS)

WOOD SUBSTRATES: (PLYWOOD, TRIM, WOOD / COMPOSITE PANELED DOORS, WHERE SCHEDULED, SHELVING, ETC.)
ALKYD SYSTEM
PRIME COAT: INTERIOR ALKYD PRIMER / SEALER
INTERMEDIATE COAT: INTERIOR ALKYD MATCHING FINAL COAT
FINAL COAT: INTERIOR ALKYD (SEMI-GLOSS)

GYPSUM BOARD SUBSTRATES:
LATEX SYSTEM
PRIME COAT: INTERIOR LATEX PRIMER/ SEALER
INTERMEDIATE COAT: INTERIOR LATEX MATCHING FINAL COAT
FINAL COAT: INTERIOR LATEX (FLAT) FOR CEILINGS, SOFFITS OR BULKHEADS, EGGSHELL FOR VERITCAL SURFACES.

ELEVATION KEYNOTES

①	TILT-UP CONCRETE WALL PANEL (PAINT)
②	ALUMINUM ENTRY WITH INSULATED GLASS - SEE SHEET A600
③	ALUMINUM STOREFRONT WITH INSULATED GLASS - SEE SHEET A600
④	PRE-ENGINEERED AND PREFINISHED METAL CANOPY
⑤	6'-0" x 5'-0" HIGH ALUM. FRAME CLEARSTORY WINDOW @ 21'-0" A.F.F.
⑥	6'-0" x 5'-0" KNOCK-OUT PANEL @ 21'-0" A.F.F.
⑦	6'-0" x 7'-0" HIGH KNOCK-OUT PANEL
⑧	6'-0" x 8'-11" HIGH KNOCK-OUT PANEL
⑩	HOLLOW METAL DOOR AND FRAME (PAINT)
⑪	24 GA. PREFINISHED METAL COPING
⑫	PREFINISHED 8" W. x 6" H. METAL GUTTER"
⑬	PREFINISHED 5" x 5" METAL DOWNSPOUT"
⑭	DOWNSPOUT GUARD - SEE A1/A501 & B1/A501 NO PAINT IF GALVANIZED, IF NOT, MATCH ADJACENT WALL FINISH.
⑮	GALVANIZED STEEL STAIR
⑯	GALVANIZED STEEL STAIR WITH AREA OF ASSISTED RESCUE
⑱	STEEL PIPE BOLLARD (PAINT)
⑲	9'-0" x 10'-0" INSULATED OVERHEAD SECTIONAL DOOR (FACTORY FINISH). SEE DOOR SCHEDULE
⑳	PIT LEVELER (REFER TO SAMET STANDARDS)
㉑	9'-0" x 12'-2" HIGH KNOCK-OUT PANEL
㉒	14' x 16' INSULATED OVERHEAD SECTIONAL DOOR (FACTORY FINISH). SEE DOOR SCHEDULE
㉓	14'-0" x 16'-0" HIGH KNOCK-OUT PANEL
㉔	GALVANIZED METAL ROOF ACCESS LADDER TO COMPLY WITH 2018 NCBC, OSHA # 1910.28 & IMC SEC. 306.5 (SEE DET. C1/A500)
㉕	EDGE OF DOCK LEVELER (REFER TO SAMET STANDARDS)
㉖	6'-0" x 5'-0" HIGH ALUM. FRAME CLERESTORY WINDOW @ 25'-10" A.F.F.
㉗	6'-0" x 5'-0" LOUVER. SEE MECH DWG'S FOR MORE INFORMATION

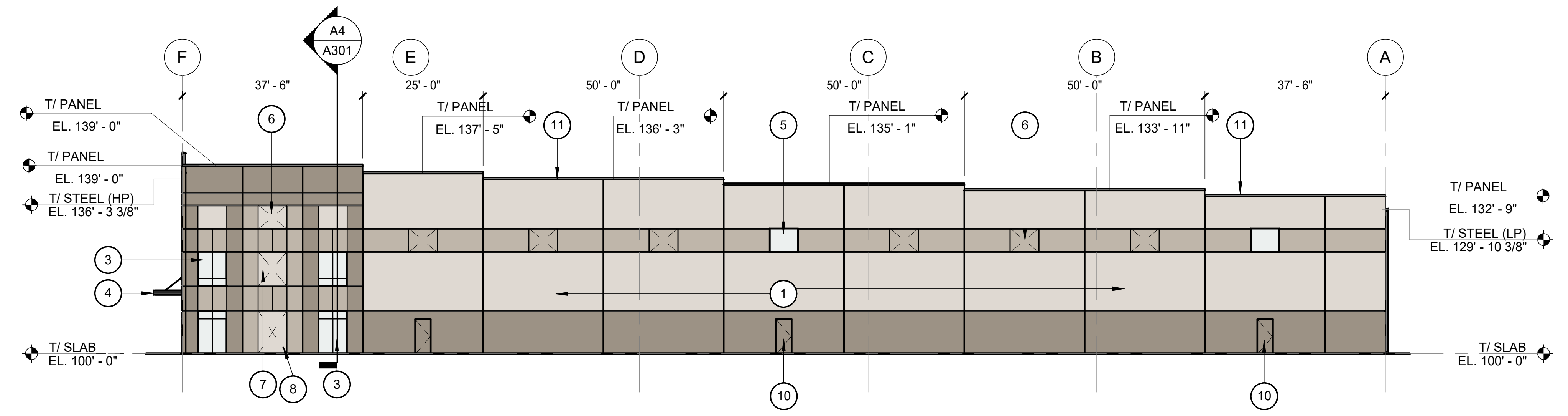

F
E
D
C
B
A
A4
A301
37' - 6"
25' - 0"
50' - 0"
50' - 0"
50' - 0"
37' - 6"
T/ PANEL
EL. 139' - 0"
T/ PANEL
EL. 139' - 0"
T/ STEEL (HP)
EL. 136' - 3 3/8"
T/ PANEL
EL. 137' - 5"
T/ PANEL
EL. 136' - 3"
T/ PANEL
EL. 135' - 1"
T/ PANEL
EL. 133' - 11"
T/ PANEL
EL. 132' - 9"
T/ STEEL (LP)
EL. 129' - 10 3/8"
T/ SLAB
EL. 100' - 0"
T/ SLAB
EL. 100' - 0"
1
3
4
5
6
7
8
10
11

B1 EAST ELEVATION
1" = 20'-0"

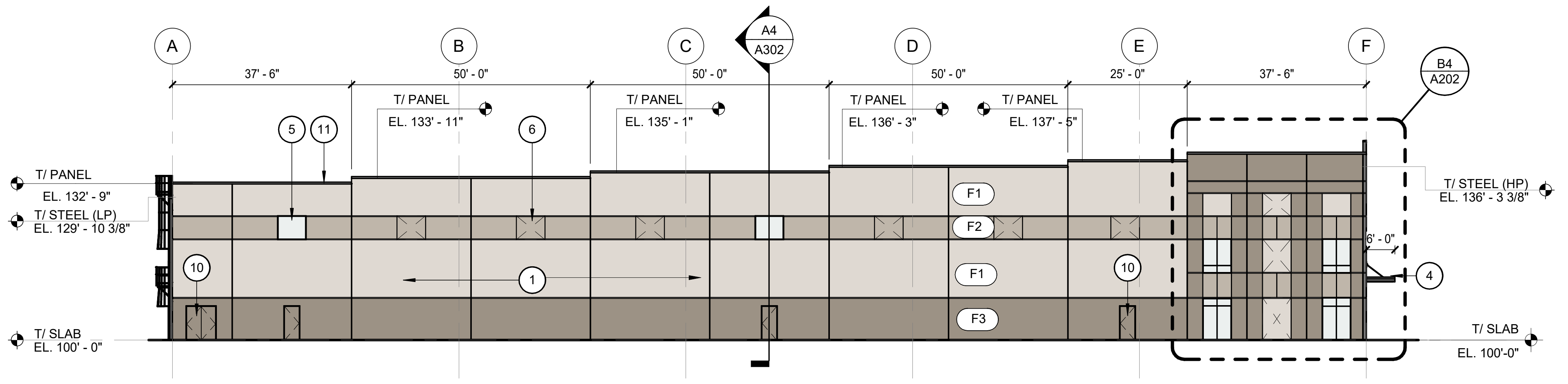

A
B
C
D
E
F
A4
A302
B4
A202
37' - 6"
50' - 0"
50' - 0"
50' - 0"
25' - 0"
37' - 6"
T/ PANEL
EL. 133' - 11"
T/ PANEL
EL. 135' - 1"
T/ PANEL
EL. 136' - 3"
T/ PANEL
EL. 137' - 5"
T/ PANEL
EL. 132' - 9"
T/ STEEL (LP)
EL. 129' - 10 3/8"
T/ STEEL (HP)
EL. 136' - 3 3/8"
T/ SLAB
EL. 100' - 0"
T/ SLAB
EL. 100'-0"
6' - 0"
F1
F2
F1
F3
1
4
5
6
10
11

B3 WEST ELEVATION
1" = 20'-0"

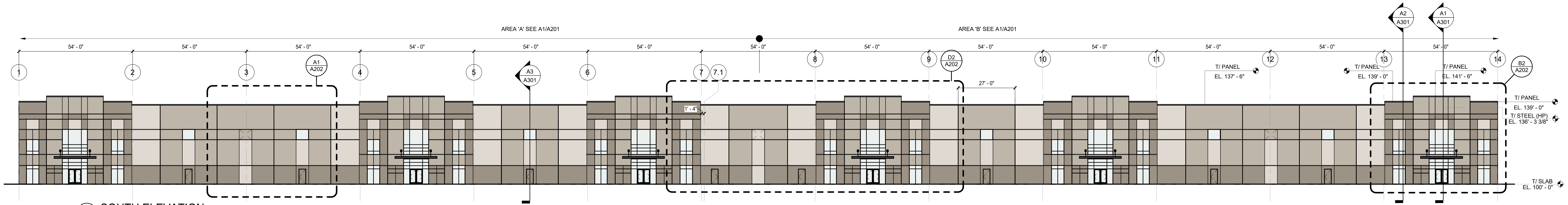

AREA 'A' SEE A1/A201
AREA 'B' SEE A1/A201
54' - 0"
1
2
3
4
5
6
7
7.1
8
9
10
11
12
13
14
A1
A202
A3
A301
D2
A202
A2
A301
A1
A301
B2
A202
1' - 4"
27' - 0"
T/ PANEL
EL. 137' - 6"
T/ PANEL
EL. 139' - 0"
T/ PANEL
EL. 141' - 6"
T/ PANEL
EL. 139' - 0"
T/ STEEL (HP)
EL. 136' - 3 3/8"
T/ SLAB
EL. 100' - 0"

C1 SOUTH ELEVATION
1" = 20'-0"

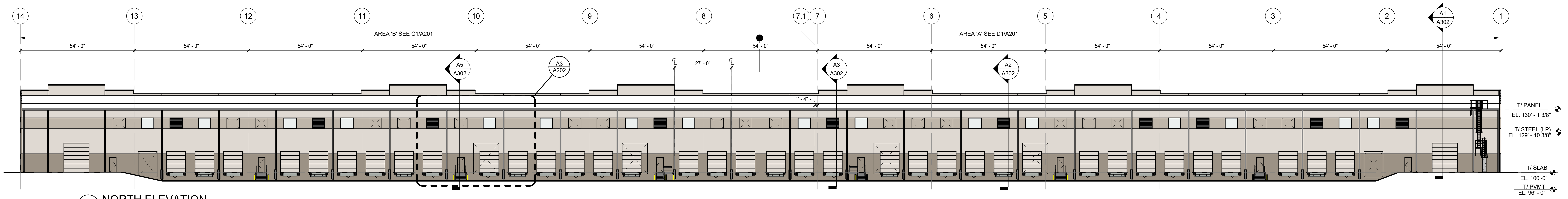

14
13
12
11
10
9
8
7.1
7
6
5
4
3
2
1
AREA 'B' SEE C1/A201
AREA 'A' SEE D1/A201
54' - 0"
27' - 0"
A5
A302
A3
A202
A3
A302
A2
A302
A1
A302
1' - 4"
T/ PANEL
EL. 130' - 1 3/8"
T/ STEEL (LP)
EL. 129' - 10 3/8"
T/ SLAB
EL. 100'-0"
T/ PVMT
EL. 96' - 0"

A1 NORTH ELEVATION
1" = 20'-0"

5/23/2025 2:57:04 PM

triaddesigngroup
Architecture | Engineering | Interior Design

4807 Koger Boulevard Suite C
Greensboro, NC 27407
Telephone 336-218-8282

8430 University Executive
Park Drive Suite 650
Charlotte, NC 28262
Telephone 704-312-0140
www.triad-designgroup.com

NC Architecture Reg. 50709
NC Engineering Lic. C-1108

SEAL
1994

PRELIMINARY

NOT ISSUED FOR CONSTRUCTION

This drawing, and the details herein, as an instrument of service, is the property of Triad Design Group, PC; it may be used only for this specific project, and shall not be loaned, copied, or reproduced in any form without expressed written consent from Triad Design Group, PC. Copyright 2025. Triad Design Group, PC, All rights reserved.

Triad Design Group, PC, shall not be responsible for construction means, methods, techniques, or procedures utilized by the contractor, nor for the safety of public or contractors' employees; nor for the failure of the contractor to carry out the work in accordance with the contract documents.

SAMET

Harnett 95 Industrial Center
SPEC BUILDING 1

US 301 S.
Dunn, North Carolina

SUBMITTALS:

DATE	DESCRIPTION
2025-05-23	90% REVIEW

REVISIONS:

NO	DATE	DESCRIPTION

SHEET TITLE:
EXTERIOR
ELEVATIONS

DATE: DATE	
DRAWN: LWM	CHECKED: MTM
JOB NUMBER:	25-009
SHEET:	

A200

PAINT SCHEDULE

EXTERIOR

EXTERIOR GALVANIZED - METAL SUBSTRATES:
LATEX SYSTEM,
CLEAN: DEGREASE SUBSTRATE PRIOR TO PRIMER APPLICATION
PRIME COAT: DTM ACRYLIC PRIMER / FINISH
INTERMEDIATE COAT: DTM ACRYLIC COATING (GLOSS)
FINAL COAT: DTM ACRYLIC COATING (GLOSS)

EXTERIOR STRUCTURAL / MISCELLANEOUS STEEL/ HOLLOW METAL ITEMS (HOLLOW METAL DOOR AND WINDOW FRAMES, BOLLARDS, LINTELS, LADDERS, EXPOSED GAS PIPING, WELD CONNECTIONS, STEEL EMBEDS, ETC.)
ALKYD SYSTEM
CLEAN/ SPOT PRIME, WHERE REQUIRED: UNIVERSAL METAL PRIMER
FIRST COAT: INDUSTRIAL ALKYD ENAMEL
FINAL COAT: INSUSTRIAL ALKYD ENAMEL (GLOSS)

EXTERIOR CONCRETE WALL PANELS:
"ULTRA-CRETE" OR "ELASTOMERIC" SYSTEM
PRESSURE WASH: COMPLETE EXTERIOR OF BUILDING TO BE PRESSURE WASHED PRIOR TO APPLICATION OF PRIMER.
PRIME COAT: COMPATIBLE WITH FINAL FINISH COAT (LOXON PRIMER)
FINAL COAT: MEDIUM TEXTURE

INTERIOR

STRUCTURAL / MISCELLANEOUS/ HOLLOW METAL STEEL ITEMS: (HOLLOW METAL DOOR AND WINDOW FRAMES, COLUMNS, BOLLARDS, RAILINGS, LINTELS, LADDERS, STAIRS, DOCK LEVELERS, WELD CONNECTIONS AND EMBEDS, ETC.)

GALVANIZED - METAL SUBSTRATES: (INCLUDES GALVANIZED STEEL ITEMS AND EXPOSED GALVANIZED METAL DUCT)
LATEX SYSTEM
CLEAN: DEGREASE SUBSTRATE PRIOR TO PRIMER APPLICATION
PRIME COAT: DTM ACRYLIC PRIMER / FINISH
INTERMEDIATE COAT: DTM ACRYLIC COATING (GLOSS)
FINAL COAT: DTM ACRYLIC COATING (GLOSS)

CONCRETE BLOCK:
LATEX SYSTEM
PRIME COAT: HEAVY DITY BLOCK FILLER
INTERMEDIATE COAT: INTERIOR ALKYD MATCING FINALCOAT
FINAL COAT: INTERIOR ALKYD (SEMI-GLOSS)

WOOD SUBSTRATES: (PLYWOOD, TRIM, WOOD / COMPOSITE PANELED DOORS, WHERE SCHEDULED, SHELVING, ETC.)
ALKYD SYSTEM
PRIME COAT: INTERIOR ALKYD PRIMER / SEALER
INTERMEDIATE COAT: INTERIOR ALKYD MATCHING FINAL COAT
FINAL COAT: INTERIOR ALKYD (SEMI-GLOSS)

GYPSUM BOARD SUBSTRATES:
LATEX SYSTEM
PRIME COAT: INTERIOR LATEX PRIMER/ SEALER
INTERMEDIATE COAT: INTERIOR LATEX MATCHING FINAL COAT
FINAL COAT: INTERIOR LATEX (FLAT) FOR CEILINGS, SOFFITS OR BULKHEADS, EGGSHELL FOR VERITCAL SURFACES.

REVEAL PROFILE

TYPE	DESCRIPTION	GRAPHIC
VERTICAL	1-1/2" X 3/4	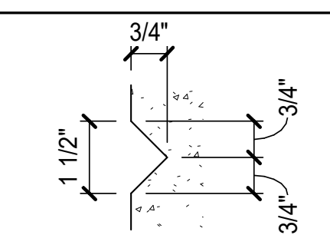
HORIZONTAL	3-1/2" X 3/4"	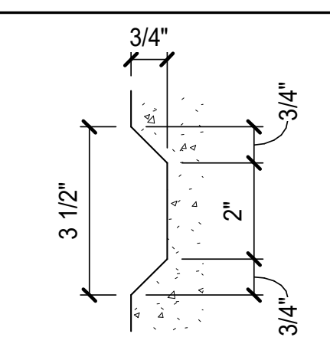 3/4" 3/4" 3 1/2" 2" 3/4"

ELEVATION KEYNOTES

①	TILT-UP CONCRETE WALL PANEL (PAINT)
②	ALUMINUM ENTRY WITH INSULATED GLASS - SEE SHEET A600
③	ALUMINUM STOREFRONT WITH INSULATED GLASS - SEE SHEET A600
④	PRE-ENGINEERED AND PREFINISHED METAL CANOPY
⑤	6'-0" x 5'-0" HIGH ALUM. FRAME CLEARSTORY WINDOW @ 21'-0" A.F.F.
⑥	6'-0" x 5'-0" KNOCK-OUT PANEL @ 21'-0" A.F.F.
⑦	6'-0" x 7'-0" HIGH KNOCK-OUT PANEL
⑧	6'-0" x 8'-11" HIGH KNOCK-OUT PANEL
⑩	HOLLOW METAL DOOR AND FRAME (PAINT)
⑪	24 GA. PREFINISHED METAL COPING
⑫	PREFINISHED 8" W. x 6" H. METAL GUTTER"
⑬	PREFINISHED 5" x 5" METAL DOWNSPOUT"
⑭	DOWNSPOUT GUARD - SEE A1/A501 & B1/A501 NO PAINT IF GALVANIZED, IF NOT, MATCH ADJACENT WALL FINISH.
⑮	GALVANIZED STEEL STAIR
⑯	GALVANIZED STEEL STAIR WITH AREA OF ASSISTED RESCUE
⑱	STEEL PIPE BOLLARD (PAINT)
⑰	9'-0" x 10'-0" INSULATED OVERHEAD SECTIONAL DOOR (FACTORY FINISH). SEE DOOR SCHEDULE
⑳	PIT LEVELER (REFER TO SAMET STANDARDS)
㉑	9'-0" x 12'-2" HIGH KNOCK-OUT PANEL
㉒	14' x 16' INSULATED OVERHEAD SECTIONAL DOOR (FACTORY FINISH). SEE DOOR SCHEDULE
㉓	14'-0" x 16'-0" HIGH KNOCK-OUT PANEL
㉔	GALVANIZED METAL ROOF ACCESS LADDER TO COMPLY WITH 2018 NCBC, OSHA # 1910.28 & IMC SEC. 306.5 (SEE DET. C1/A500)
㉕	EDGE OF DOCK LEVELER (REFER TO SAMET STANDARDS)
㉖	6'-0" x 5'-0" HIGH ALUM. FRAME CLERESTORY WINDOW @ 25'-10" A.F.F.
㉗	6'-0" x 5'-0" LOUVER. SEE MECH DWG'S FOR MORE INFORMATION

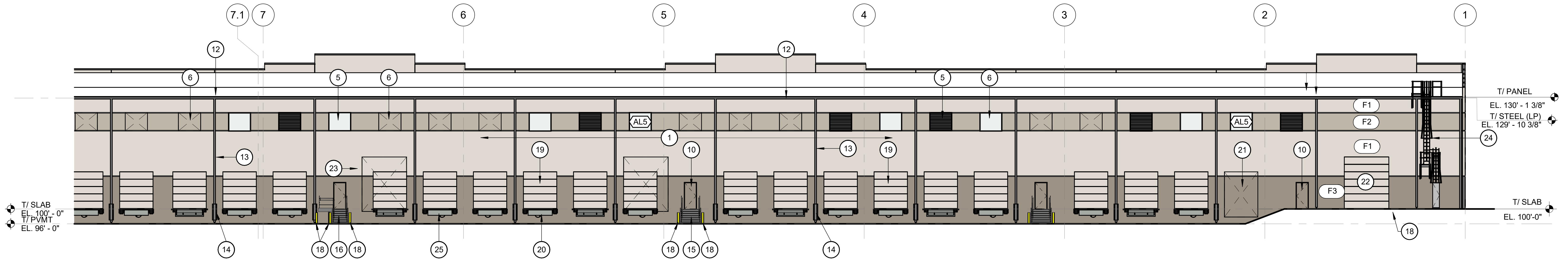
7.1
7
6
5
4
3
2
1
12
6
5
6
5
6
AL5
AL5
F1
F2
F1
F3
13
23
1
19
10
13
19
21
10
22
24
T/ PANEL
EL. 130' - 1 3/8"
T/ STEEL (LP)
EL. 129' - 10 3/8"
T/ SLAB
EL. 100'-0"
T/ SLAB
EL. 100' - 0"
T/ PVMT
EL. 96' - 0"
14
18
16
18
25
20
18
15
18
14
18

D1 NORTH ELEVATION AREA 'A'

1/16" = 1'-0"

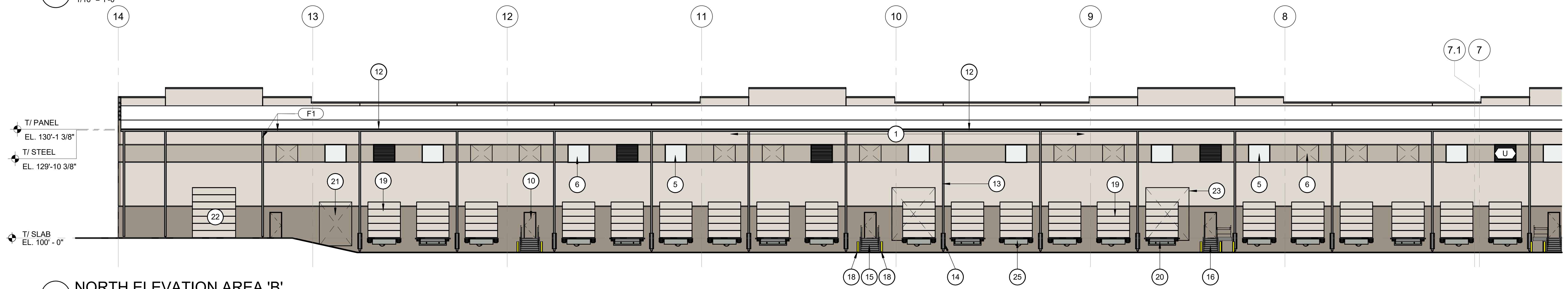
14
13
12
11
10
9
8
7.1
7
12
12
F1
T/ PANEL
EL. 130'-1 3/8"
T/ STEEL
EL. 129'-10 3/8"
1
U
21
19
10
6
5
13
19
23
5
6
22
T/ SLAB
EL. 100' - 0"
18
15
18
14
25
20
16

C1 NORTH ELEVATION AREA 'B'

1/16" = 1'-0"

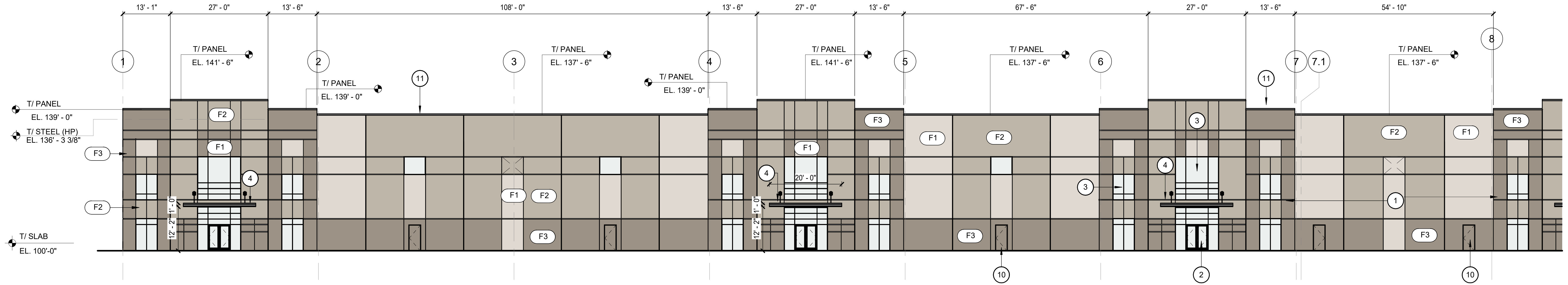
13' - 1"
27' - 0"
13' - 6"
108' - 0"
13' - 6"
27' - 0"
13' - 6"
67' - 6"
27' - 0"
13' - 6"
54' - 10"
1
2
3
4
5
6
7
7.1
8
T/ PANEL
EL. 141' - 6"
T/ PANEL
EL. 139' - 0"
T/ PANEL
EL. 137' - 6"
T/ PANEL
EL. 139' - 0"
T/ PANEL
EL. 141' - 6"
T/ PANEL
EL. 137' - 6"
T/ PANEL
EL. 137' - 6"
11
11
T/ PANEL
EL. 139' - 0"
T/ STEEL (HP)
EL. 136' - 3 3/8"
F3
F2
F1
4
F1
F2
F3
12' - 2"
1' - 0"
F3
F1
F2
F1
4
20' - 0"
3
F3
4
3
1
F2
F1
F3
F3
T/ SLAB
EL. 100'-0"
10
2
10

B1 SOUTH ELEVATION AREA 'A'

1/16" = 1'-0"

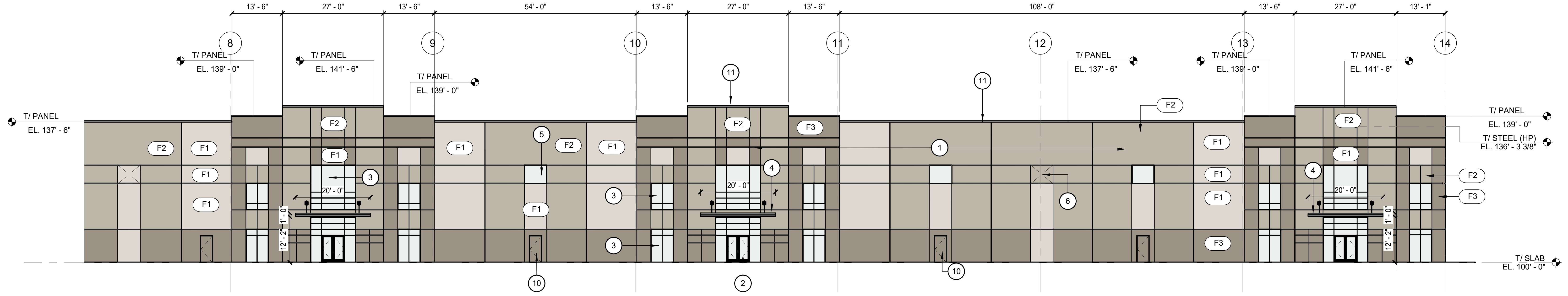
13' - 6"
27' - 0"
13' - 6"
54' - 0"
13' - 6"
27' - 0"
13' - 6"
108' - 0"
13' - 6"
27' - 0"
13' - 1"
8
9
10
11
12
13
14
T/ PANEL
EL. 139' - 0"
T/ PANEL
EL. 141' - 6"
T/ PANEL
EL. 139' - 0"
T/ PANEL
EL. 137' - 6"
T/ PANEL
EL. 139' - 0"
T/ PANEL
EL. 141' - 6"
T/ PANEL
EL. 137' - 6"
11
11
T/ PANEL
EL. 139' - 0"
T/ STEEL (HP)
EL. 136' - 3 3/8"
F2
F1
F1
F1
F2
F1
3
20' - 0"
F1
5
F2
F1
F1
F2
F3
4
20' - 0"
3
3
1
F2
6
F1
F1
F1
F3
F2
F1
4
20' - 0"
F2
F3
12' - 2"
T/ SLAB
EL. 100' - 0"
10
2
10

A1 SOUTH ELEVATION AREA 'B'

1/16" = 1'-0"

PAINT SPECIFICATIONS

INTERIOR

PROVIDE SHERWIN WILLIAMS OR APPROVED EQUAL

WALLS - GWB:
1 COAT: SHERWIN WILLIAMS: PRO MAR 200 ZERO VOC INTERIOR LATEX PRIMER (WHITE)
2 COATS: SHERWIN WILLIAMS: PRO MAR 200 ZERO VOC INTERIOR LATEX (EGGSHELL)

WALLS - CMU:
1 COAT: SHERWIN WILLIAMS: PREPRITE INTERIOR / EXTERIOR BLOCK FILLER
2 COATS: SHERWIN WILLIAMS: PRO MAR 200 ZERO VOC INTERIOR LATEX (EGGSHELL)

CEILIINGS - GWB:
1 COAT: SHERWIN WILLIAMS: PRO MAR 200 ZERO VOC INTERIOR LATEX PRIMER (WHITE)
2 COATS: SHERWIN WILLIAMS: PRO MAR 200 ZERO VOC INTERIOR LATEX (FLAT)

HM DOORS / HM FRAMES:
PRIMER: SHERWIN WILLIAMS: PRO INDUSTRIAL PRO-CRYL UNIVERSAL PRIMER
(PRIME AS NEEDED)
2 COATS: SHERWIN WILLIAMS: PRO INDUSTRIAL WATERBASED ALKYD URETHANE (SEMI-GLOSS)

EXTERIOR

PRE-CAST PANELS:
1 COAT: SHERWIN WILLIAMS: LOXON CONCRETE & MASONRY PRIMER
2 COATS: SHERWIN WILLIAMS: MEDIUM TEXTURE

ACCENTS:
2 COATS: SHERWIN WILLIAMS: A-100 EXTERIOR ACRYLIC LATEX (SATIN)

BOLLARDS / DOWNSPOUT PROTECTOR PLATES:
PRIMER: SHERWIN WILLIAMS: PRO INDUSTRIAL PRO-CRYL UNIVERSAL PRIMER
(PRIME AS NEEDED)
2 COATS: SHERWIN WILLIAMS: PRO INDUSTRIAL WATERBASED ALKYD URETHANE (SEMI-GLOSS)

DOCK SILLS & DRIVE-IN DOOR ANGLE PLATES:
PRIMER: SHERWIN WILLIAMS: PRO INDUSTRIAL DTM ACRYLIC PRIMER / FINISH
(PRIME AS NEEDED)
2 COATS: SHERWIN WILLIAMS: PRO INDUSTRIAL DTM ACRYLIC (SEMI-GLOSS)

MECHANICAL EDGE OF DOCK LEVELER:
PRIMER: SHERWIN WILLIAMS: PRO INDUSTRIAL PRO-CRYL UNIVERSAL PRIMER
(PRIME AS NEEDED)
2 COATS: SHERWIN WILLIAMS: PRO INDUSTRIAL WATERBASED ALKYD URETHANE (SEMI-GLOSS)

EXTERIOR FINISH SCHEDULE

MARK	FINISH	MANUFACTURER / COLOR
F1	CONCRETE WALL PANELS ELASTOMETRIC PAINT (TEXTURE)	SHERWIN WILLIAMS / SIMPLE WHITE SW 7021
F2	CONCRETE WALL PANELS ELASTOMETRIC PAINT (TEXTURE)	SHERWIN WILLIAMS / ANEW GRAY SW 7030
F3	CONCRETE WALL PANELS ELASTOMETRIC PAINT (TEXTURE)	SHERWIN WILLIAMS / KEYSTONE GRAY SW 7504
F4	STOREFRONT	TBD
F5	HOLLOW METAL DOORS & FRAMES PRO INDUSTRIAL WATERBASED ALKYD URETHANE (SEMI-GLOSS)	SHERWIN WILLIAMS / KEYSTONE GRAY SW 7504
F6	CANOPY	TBD
F7	COPING/GUTTERS/DOWNSPOUTS	FACTORY FINISH
F8	STEEL PIPE BOLLARD PRO INDUSTRIAL WATERBASED ALKYD (SEMI-GLOSS)	SHERWIN WILLIAMS / OSHA YELLOW
F9	LADDERS / STAIRS / PIPE AND TUBE RAILING	NO PAINT
F10	DOCK DOORS	PREFINISHED - TBD
F11	DOCK LEVELERS	NO PAINT - LABEL AS REQUIRED
F12	EXTERIOR EXPOSED GAS PIPING	PAINT

NOTES:
1. ALL REVEALS TO BE PAINTED SAME AS ADJACENT FIELD COLOR (ABOVE OR BELOW) - MAINTAIN CONSISTENCY AROUND BUILDING.

triaddesigngroup
Architecture | Engineering | Interior Design

4807 Koger Boulevard Suite C
Greensboro, NC 27407
Telephone 336-218-8282

8430 University Executive
Park Drive Suite 650
Charlotte, NC 28262
Telephone 704-312-0140
www.triad-designgroup.com

NC Architecture Reg. 50709
NC Engineering Lic. C-1108

SEAL
1994

PRELIMINARY

NOT ISSUED FOR CONSTRUCTION

This drawing, and the details herein, as an instrument of service, is the property of Triad Design Group, PC; it may be used only for this specific project, and shall not be loaned, copied, or reproduced in any form without expressed written consent from Triad Design Group, PC. Copyright 2025. Triad Design Group, PC, All rights reserved.

Triad Design Group, PC, shall not be responsible for construction means, methods, techniques, or procedures utilized by the contractor, nor for the safety of public or contractors' employees; nor for the failure of the contractor to carry out the work in accordance with the contract documents.

SAMET

Harnett 95 Industrial Center

SPEC BUILDING 1

US 301 S.
Dunn, North Carolina

SUBMITTALS:

DATE	DESCRIPTION
2025-05-23	90% REVIEW

REVISIONS:

NO	DATE	DESCRIPTION

SHEET TITLE:
PARTIAL ELEVATIONS

DATE: DATE
DRAWN: LWM
CHECKED: MTM
JOB NUMBER: 25-009
SHEET:
A201

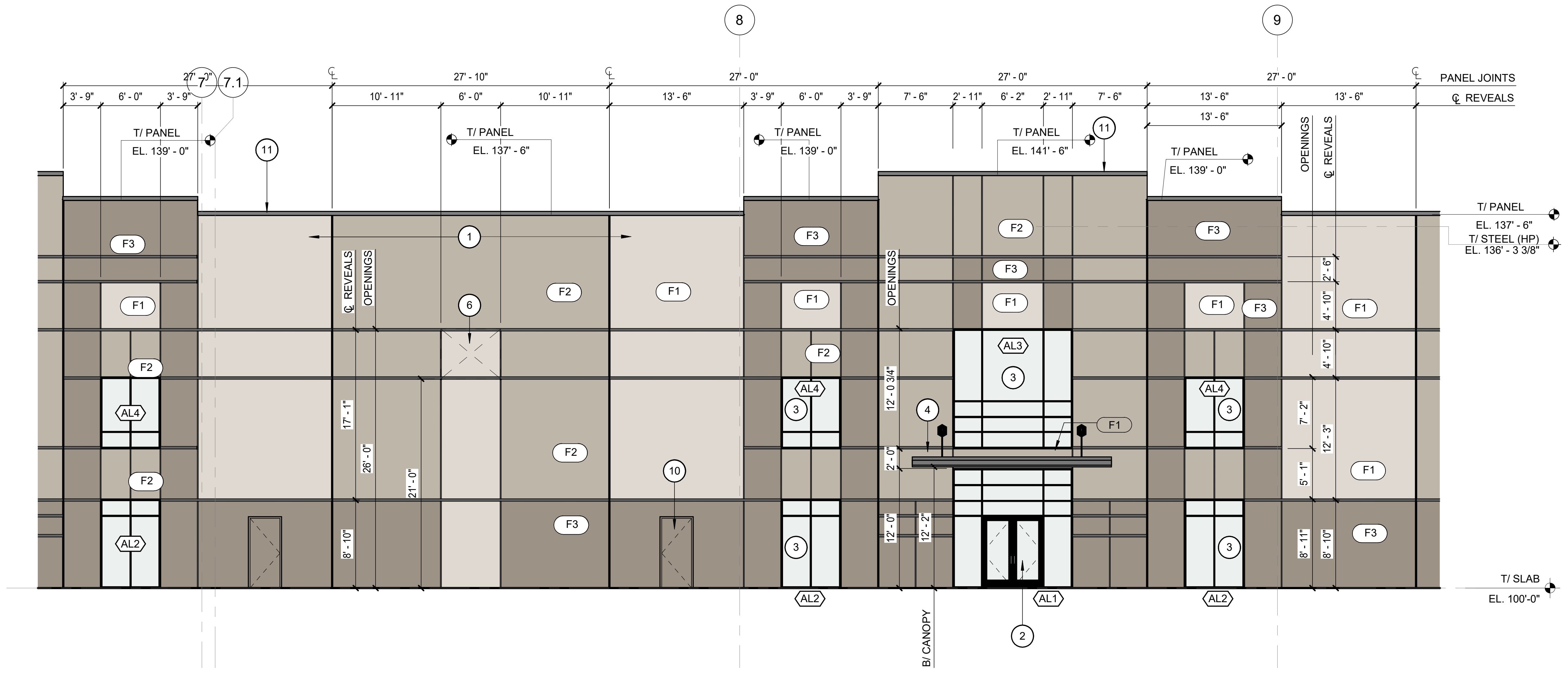

D2 ENLARGED ELEVATION CENTER ENTRANCE
1/8" = 1'-0"

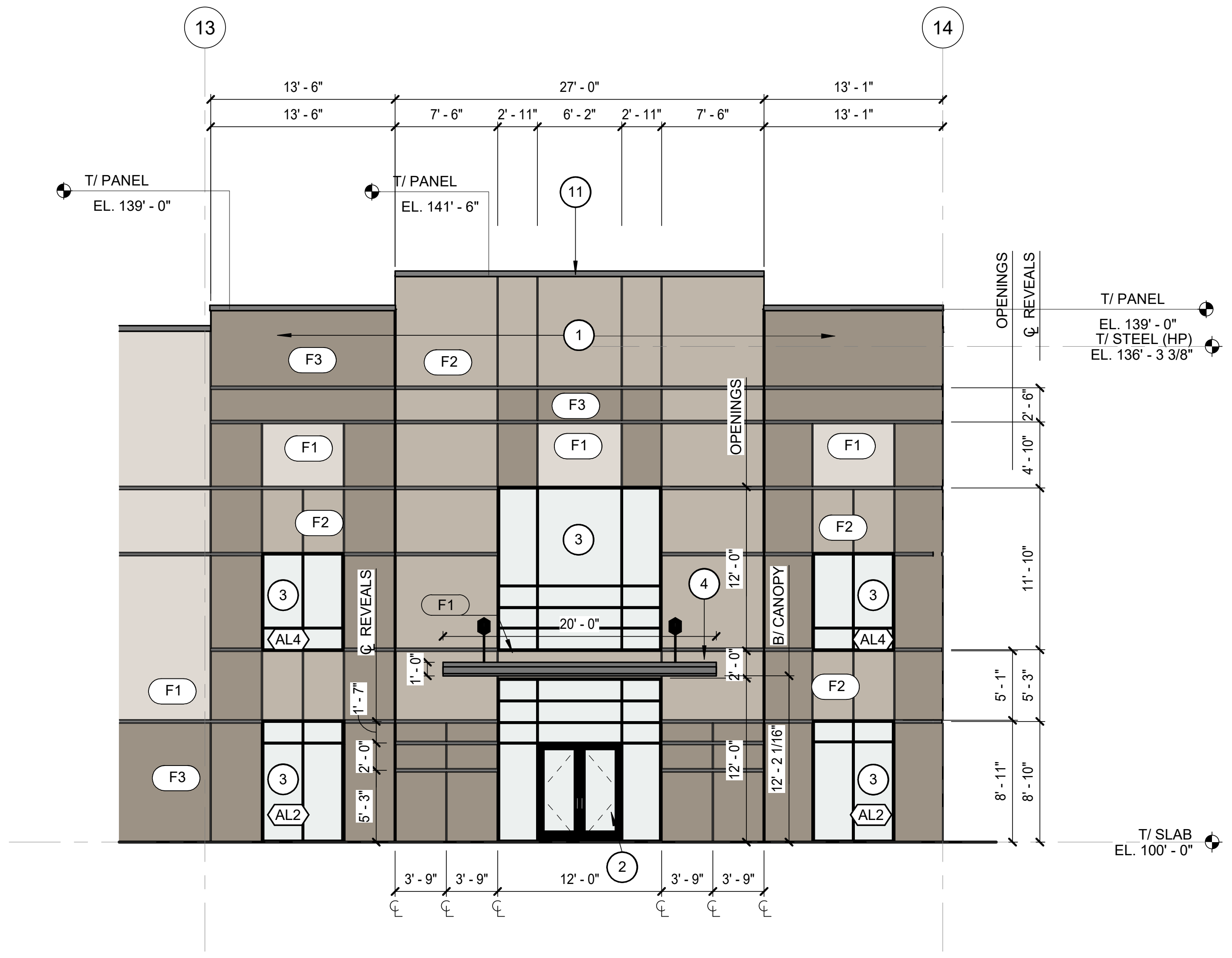

B2 ENLARGED ELEVATION @ CORNER ENTRY
1/8" = 1'-0"

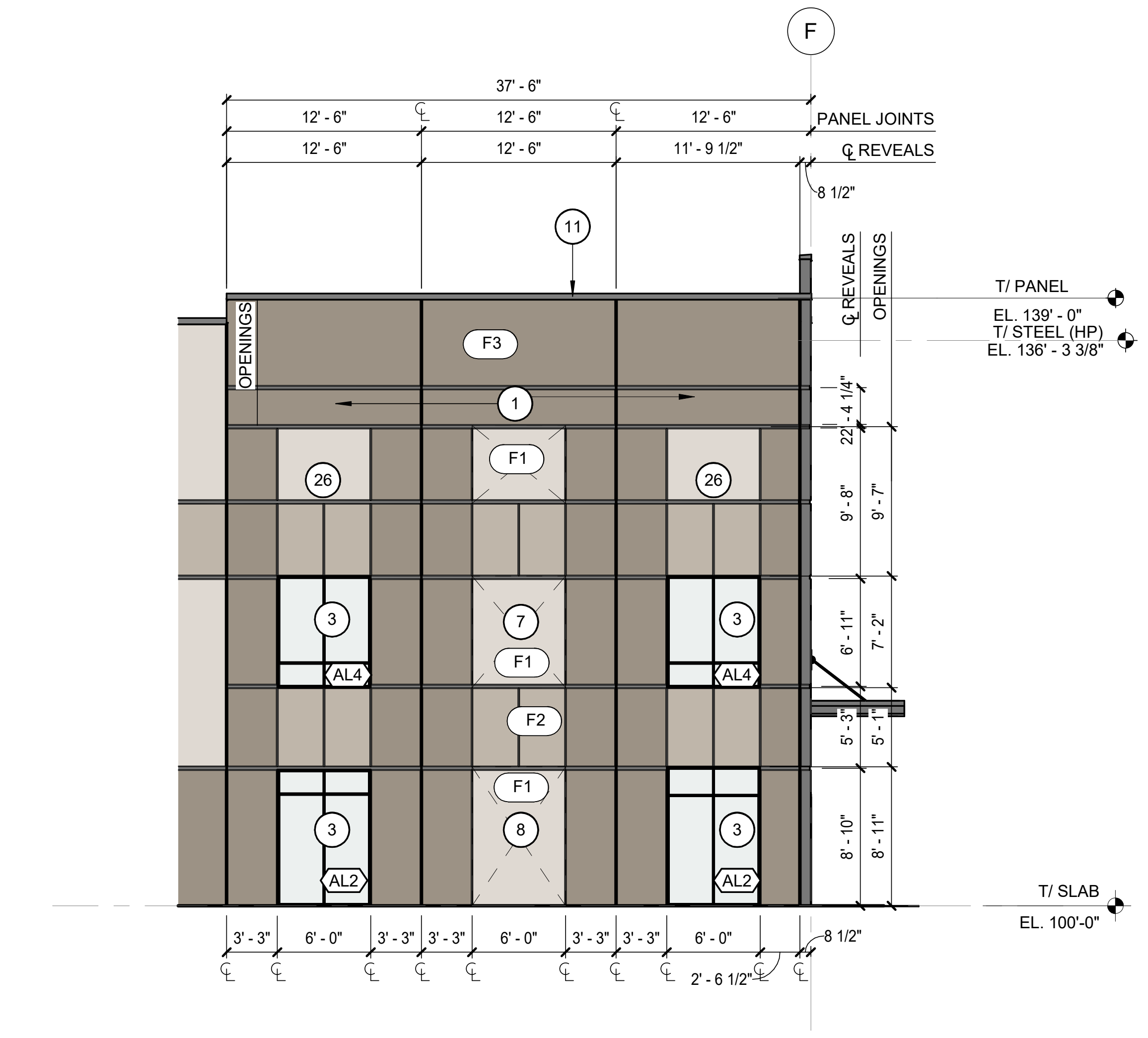

B4 ENLARGED ELEVATION @ SIDE WALL
1/8" = 1'-0"

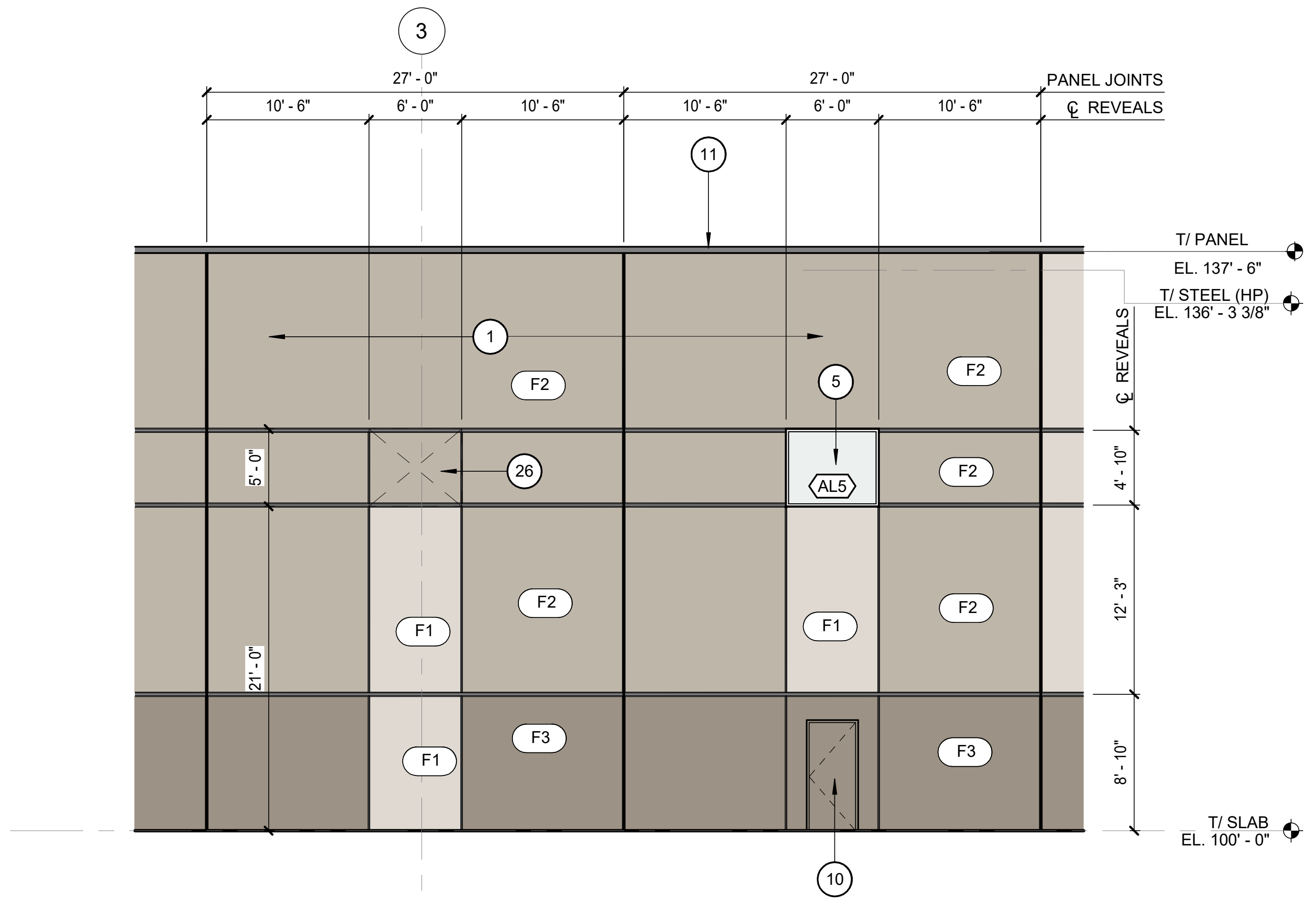

A1 ENLARGED ELEVATION @ PERSONNEL DOOR
1/8" = 1'-0"

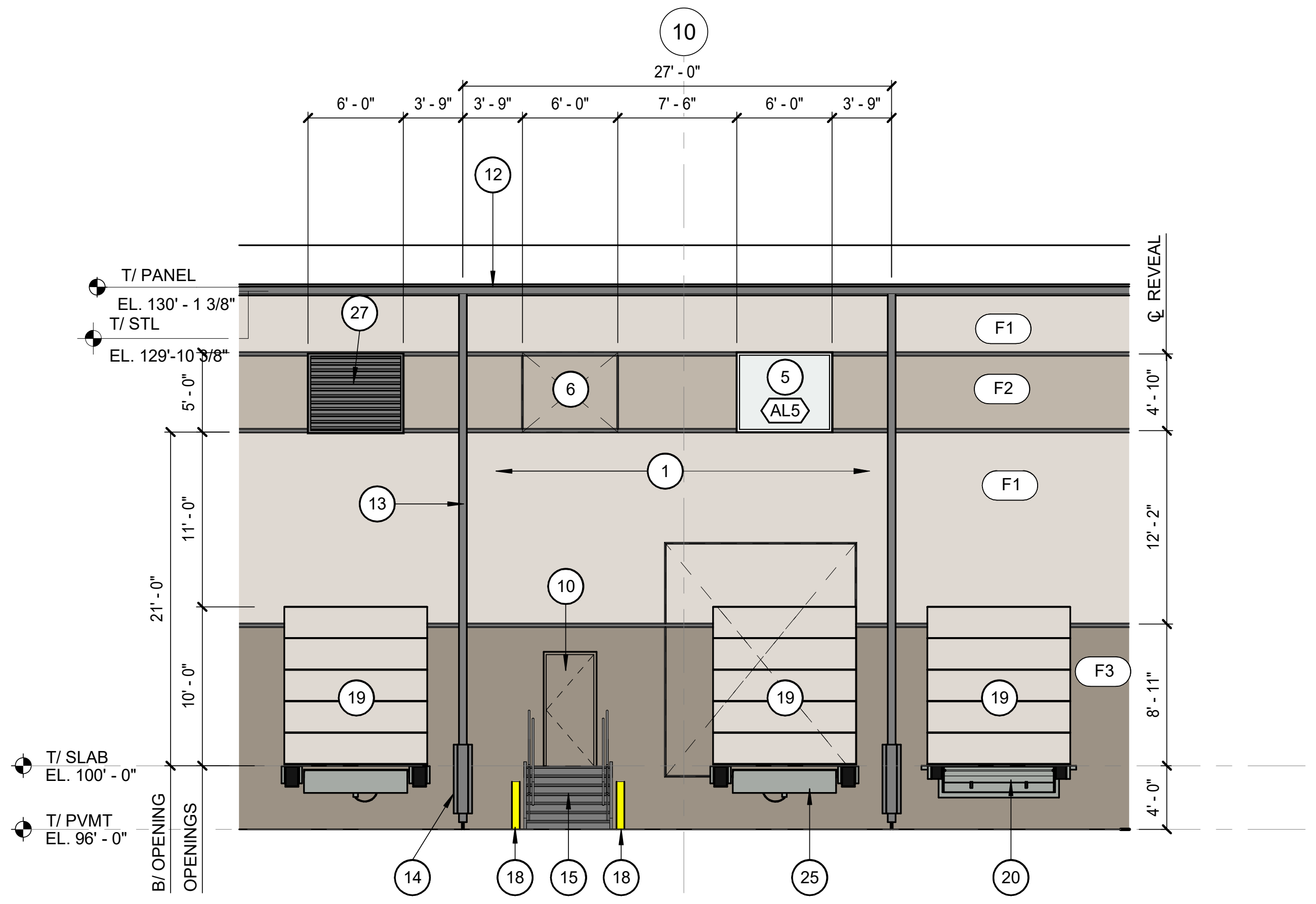

A3 ENLARGED ELEVATION @ DOCK WALL
1/8" = 1'-0"

PAINT SCHEDULE

EXTERIOR

EXTERIOR GALVANIZED - METAL SUBSTRATES:
LATEX SYSTEM,
CLEAN: DEGREASE SUBSTRATE PRIOR TO PRIMER APPLICATION
PRIME COAT: DTM ACRYLIC PRIMER / FINISH
INTERMEDIATE COAT: DTM ACRYLIC COATING (GLOSS)
FINAL COAT: DTM ACRYLIC COATING (GLOSS)

EXTERIOR STRUCTURAL / MISCELLANEOUS STEEL/ HOLLOW METAL ITEMS (HOLLOW METAL DOOR AND WINDOW FRAMES, BOLLARDS, RAILINGS, LINTELS, LADDERS, STAIRS, DOCK LEVELERS, EXPOSEDE GAS PIPING, WELD CONNECTIONS, STEEL EMBEDS, ETC.)
ALKYD SYSTEM
CLEAN/ SPOT PRIME, WHERE REQUIRED: UNIVERSAL METAL PRIMER
FIRST COAT: INDUSTRIAL ALKYD ENAMEL
FINAL COAT: INSUSTRIAL ALKYD ENAMEL (GLOSS)

EXTERIOR CONCRETE WALL PANELS:
"ULTRA-CRETE" OR "ELASTOMERIC" SYSTEM
PRESSURE WASH: COMPLETE EXTERIOR OF BUILDING TO BE PRESSURE WASHED PRIO TO APPLICATION OF PRIMER.
PRIME COAT: COMPATIBLE WITH FINAL FINISH COAT (LOXON PRIMER)
FINAL COAT: MEDIUM TEXTURE

INTERIOR

STRUCTURAL / MISCELLANEOUS/ HOLLOW METAL STEEL ITEMS: (HOLLOW METAL DOOR AND WINDOW FRAMES, COLUMNS, BOLLARDS, RAILINGS, LINTELS, LADDERS, STAIRS, DOCK LEVELERS, WELD CONNECTIONS AND EMBEDS, ETC.)

GALVANIZED - METAL SUBSTRATES: (INCLUDES GALVANIZED STEEL ITEMS AND EXPOSED GALVANIZED METAL DUCT)
LATEX SYSTEM
CLEAN: DEGREASE SUBSTRATE PRIOR TO PRIMER APPLICATION
PRIME COAT: DTM ACRYLIC PRIMER / FINISH
INTERMEDIATE COAT: DTM ACRYLIC COATING (GLOSS)
FINAL COAT: DTM ACRYLIC COATING (GLOSS)

CONCRETE BLOCK:
LATEX SYSTEM
PRIME COAT: HEAVY DITY BLOCK FILLER
INTERMEDIATE COAT: INTERIOR ALKYD MATCING FINALCOAT
FINAL COAT: INTERIOR ALKYD (SEMI-GLOSS)

WOOD SUBSTRATES: (PLYWOOD, TRIM, WOOD / COMPOSITE PANELED DOORS, WHERE SCHEDULED, SHELVING, ETC.)
ALKYD SYSTEM
PRIME COAT: INTERIOR ALKYD PRIMER / SEALER
INTERMEDIATE COAT: INTERIOR ALKYD MATCHING FINAL COAT
FINAL COAT: INTERIOR ALKYD (SEMI-GLOSS)

GYPSUM BOARD SUBSTRATES:
LATEX SYSTEM
PRIME COAT: INTERIOR LATEX PRIMER/ SEALER
INTERMEDIATE COAT: INTERIOR LATEX MATCHING FINAL COAT
FINAL COAT: INTERIOR LATEX (FLAT) FOR CEILINGS, SOFFITS OR BULKHEADS, EGGSHELL FOR VERITCAL SURFACES.

PAINT SPECIFICATIONS

INTERIOR

PROVIDE SHERWIN WILLIAMS OR APPROVED EQUAL

WALLS - GWB:
1 COAT: SHERWIN WILLIAMS: PRO MAR 200 ZERO VOC INTERIOR LATEX PRIMER (WHITE)
2 COATS: SHERWIN WILLIAMS: PRO MAR 200 ZERO VOC INTERIOR LATEX (EGGSHELL)

WALLS - CMU:
1 COAT: SHERWIN WILLIAMS: PREPRITE INTERIOR / EXTERIOR BLOCK FILLER
2 COATS: SHERWIN WILLIAMS: PRO MAR 200 ZERO VOC INTERIOR LATEX (EGGSHELL)

CEILIINGS - GWB:
1 COAT: SHERWIN WILLIAMS: PRO MAR 200 ZERO VOC INTERIOR LATEX PRIMER (WHITE)
2 COATS: SHERWIN WILLIAMS: PRO MAR 200 ZERO VOC INTERIOR LATEX (FLAT)

HM DOORS / HM FRAMES:
PRIMER: SHERWIN WILLIAMS: PRO INDUSTRIAL PRO-CRYL UNIVERSAL PRIMER (PRIME AS NEEDED)
2 COATS: SHERWIN WILLIAMS: PRO INDUSTRIAL WATERBASED ALKYD URETHANE (SEMI-GLOSS)

EXTERIOR

PRE-CAST PANELS:
1 COAT: SHERWIN WILLIAMS: LOXON CONCRETE & MASONRY PRIMER
2 COATS: SHERWIN WILLIAMS: MEDIUM TEXTURE

ACCENTS:
2 COATS: SHERWIN WILLIAMS: A-100 EXTERIOR ACRYLIC LATEX (SATIN)

BOLLARDS / DOWNSPOUT PROTECTOR PLATES:
PRIMER: SHERWIN WILLIAMS: PRO INDUSTRIAL PRO-CRYL UNIVERSAL PRIMER (PRIME AS NEEDED)
2 COATS: SHERWIN WILLIAMS: PRO INDUSTRIAL WATERBASED ALKYD URETHANE (SEMI-GLOSS)

DOCK SILLS & DRIVE-IN DOOR ANGLE PLATES:
PRIMER: SHERWIN WILLIAMS: PRO INDUSTRIAL DTM ACRYLIC PRIMER / FINISH (PRIME AS NEEDED)
2 COATS: SHERWIN WILLIAMS: PRO INDUSTRIAL DTM ACRYLIC (SEMI-GLOSS)

MECHANICAL EDGE OF DOCK LEVELER:
PRIMER: SHERWIN WILLIAMS: PRO INDUSTRIAL PRO-CRYL UNIVERSAL PRIMER (PRIME AS NEEDED)
2 COATS: SHERWIN WILLIAMS: PRO INDUSTRIAL WATERBASED ALKYD URETHANE (SEMI-GLOSS)

ELEVATION KEYNOTES

①	TILT-UP CONCRETE WALL PANEL (PAINT)
②	ALUMINUM ENTRY WITH INSULATED GLASS - SEE SHEET A600
③	ALUMINUM STOREFRONT WITH INSULATED GLASS - SEE SHEET A600
④	PRE-ENGINEERED AND PREFINISHED METAL CANOPY
⑤	6'-0" x 5'-0" HIGH ALUM. FRAME CLEARSTORY WINDOW @ 21'-0" A.F.F.
⑥	6'-0" x 5'-0" KNOCK-OUT PANEL @ 21'-0" A.F.F.
⑦	6'-0" x 7'-0" HIGH KNOCK-OUT PANEL
⑧	6'-0" x 8'-11" HIGH KNOCK-OUT PANEL
⑩	HOLLOW METAL DOOR AND FRAME (PAINT)
⑪	24 GA. PREFINISHED METAL COPING
⑫	PREFINISHED 8" W. x 6" H. METAL GUTTER"
⑬	PREFINISHED 5" x 5" METAL DOWNSPOUT"
⑭	DOWNSPOUT GUARD - SEE A1/A501 & B1/A501 NO PAINT IF GALVANIZED, IF NOT, MATCH ADJACENT WALL FINISH.
⑮	GALVANIZED STEEL STAIR
⑯	GALVANIZED STEEL STAIR WITH AREA OF ASSISTED RESCUE
⑱	STEEL PIPE BOLLARD (PAINT)
⑰	NOT USED 9'-0" x 10'-0" INSULATED OVERHEAD SECTIONAL DOOR (FACTORY FINISH). SEE DOOR SCHEDULE
⑳	PIT LEVELER (REFER TO SAMET STANDARDS)
㉑	9'-0" x 12'-2" HIGH KNOCK-OUT PANEL
㉒	14' x 16' INSULATED OVERHEAD SECTIONAL DOOR (FACTORY FINISH). SEE DOOR SCHEDULE
㉓	14'-0" x 16'-0" HIGH KNOCK-OUT PANEL
㉔	GALVANIZED METAL ROOF ACCESS LADDER TO COMPLY WITH 2018 NCBC, OSHA # 1910.28 & IMC SEC. 306.5 (SEE DET. C1/A500)
㉕	EDGE OF DOCK LEVELER (REFER TO SAMET STANDARDS)
㉖	6'-0" x 5'-0" HIGH ALUM. FRAME CLERESTORY WINDOW @ 25'-10" A.F.F.
㉗	6'-0" x 5'-0" LOUVER. SEE MECH DWG'S FOR MORE INFORMATION

EXTERIOR FINISH SCHEDULE

MARK	FINISH	MANUFACTURER / COLOR
F1	CONCRETE WALL PANELS ELASTOMETRIC PAINT (TEXTURE)	SHERWIN WILLIAMS / SIMPLE WHITE SW 7021
F2	CONCRETE WALL PANELS ELASTOMETRIC PAINT (TEXTURE)	SHERWIN WILLIAMS / ANEW GRAY SW 7030
F3	CONCRETE WALL PANELS ELASTOMETRIC PAINT (TEXTURE)	SHERWIN WILLIAMS / KEYSTONE GRAY SW 7504
F4	STOREFRONT	TBD
F5	HOLLOW METAL DOORS & FRAMES PRO INDUSTRIAL WATERBASED ALKYD URETHANE (SEMI-GLOSS)	SHERWIN WILLIAMS / KEYSTONE GRAY SW 7504
F6	CANOPY	TBD
F7	COPING/GUTTERS/DOWNSPOUTS	FACTORY FINISH
F8	STEEL PIPE BOLLARD PRO INDUSTRIAL WATERBASED ALKYD (SEMI-GLOSS)	SHERWIN WILLIAMS / OSHA YELLOW
F9	LADDERS / STAIRS / PIPE AND TUBE RAILING	NO PAINT
F10	DOCK DOORS	PREFINISHED - TBD
F11	DOCK LEVELERS	NO PAINT - LABEL AS REQUIRED
F12	EXTERIOR EXPOSED GAS PIPING	PAINT

NOTES:
1. ALL REVEALS TO BE PAINTED SAME AS ADJACENT FIELD COLOR (ABOVE OR BELOW) - MAINTAIN CONSISTENCY AROUND BUILDING.

REVEAL PROFILE

TYPE	DESCRIPTION	GRAPHIC
VERTICAL	1-1/2" X 3/4	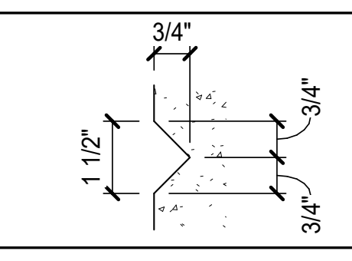
HORIZONTAL	3-1/2" X 3/4"	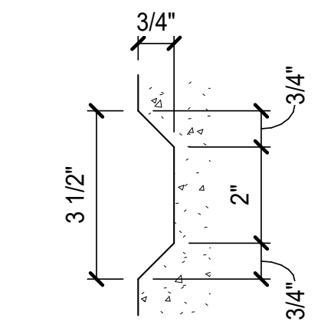

triaddesigngroup
Architecture | Engineering | Interior Design

4807 Koger Boulevard Suite C
Greensboro, NC 27407
Telephone 336-218-8282

8430 University Executive
Park Drive Suite 650
Charlotte, NC 28262
Telephone 704-312-0140
www.triad-designgroup.com

NC Architecture Reg. 50709
NC Engineering Lic. C-1108

TRIAD DESIGN GROUP, P.C.
1994

PRELIMINARY

NOT ISSUED FOR CONSTRUCTION

This drawing, and the details herein, as an instrument of service, is the property of Triad Design Group, PC; it may be used only for this specific project, and shall not be loaned, copied, or reproduced in any form without expressed written consent from Triad Design Group, PC. Copyright 2025. Triad Design Group, PC, All rights reserved.

Triad Design Group, PC, shall not be responsible for construction means, methods, techniques, or procedures utilized by the contractor, nor for the safety of public or contractors' employees; nor for the failure of the contractor to carry out the work in accordance with the contract documents.

SAMET

Harnett 95 Industrial Center
SPEC BUILDING 1
US 301 S.
Dunn, North Carolina

SUBMITTALS:

DATE	DESCRIPTION
2025-05-23	90% REVIEW

REVISIONS:

NO	DATE	DESCRIPTION

SHEET TITLE:
ENLARGED
ELEVATIONS

DATE: DATE
DRAWN: LWM
CHECKED: MTM
JOB NUMBER: 25-009
SHEET:
A202

5/23/2025 2:57:12 PM