CONSTRUCTION DRAWINGS
SMALL ENGINE REPAIR
189 PROGRESSIVE PARKWAY
ANGIER, NC 27501

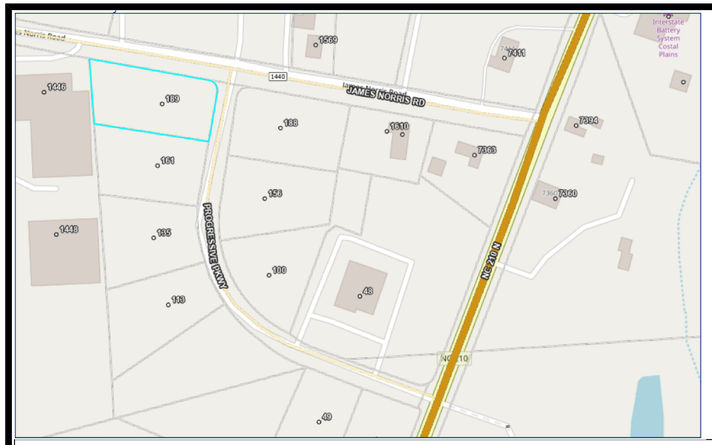

VICINITY MAP

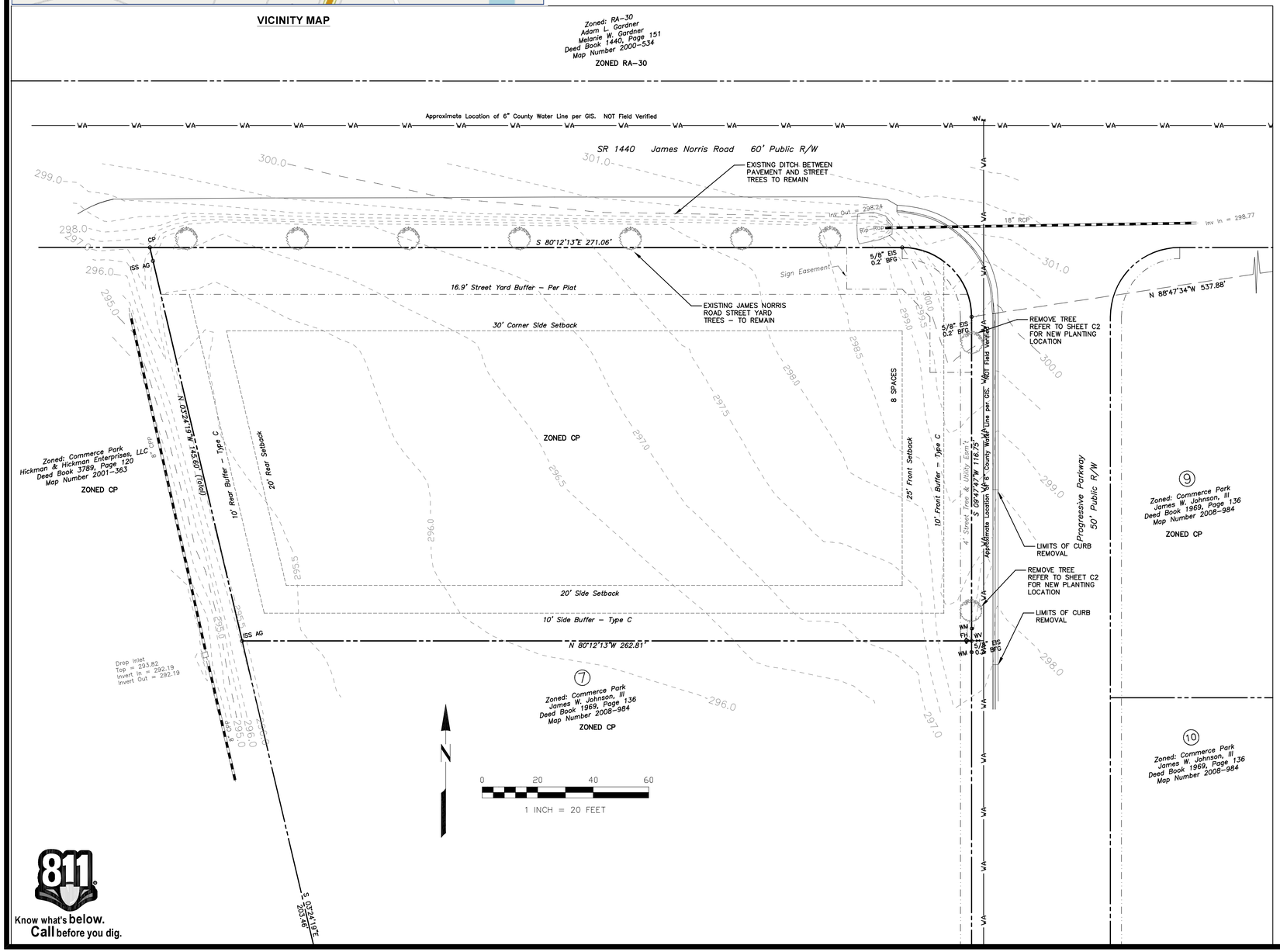

SITE DATA

SITE ADDRESS:	189 PROGRESSIVE WAY ANGIER NC 27501 HARNETT COUNTY
OWNER:	LILLINGTON SMALL ENGINE REPAIR AND RENTAL, LLC 748 S RIVER ROAD LILLINGTON NC 27546 JASON HUGGINS
PIN:	0673.04-2122.000
PID:	040673 0070 09
DEED BOOK AND PAGE:	BK 4246; PG 1912
TOTAL SITE AREA:	0.906 ACRES
FEMA MAP:	3720066200J DATED 10/3/2006
FEMA ZONE:	NOT WITHIN FLOOD ZONE
WATERSHED:	NOT WITHIN A WATERSHED

SHEET INDEX

C1	COVER EXISTING CONDITIONS
C2	SITE AND LANDSCAPE PLAN
C3	GRADING AND UTILITY PLAN
C4	EROSION CONTROL PLAN
C5	SITE DETAILS
C6	SITE DETAILS

ENGINEER

CAPITAL CIVIL ENGINEERING, PLLC
1011 PEMBERTON HILL RD, STE 203
APEX, NC 27502
PH: 919 249-8587
MICHAEL McQuillen, PE
mmcquillen@capitalcivil.com
919-249-8587

PROJECT MANAGER

GREGORY DEVELOPMENT, LLC
9541 INDUSTRY DRIVE
RALEIGH, NC 27603
CLINT GREGORY
clint@gregory-development.com
919-779-3522

Know what's below. Call before you dig.

CONSTRUCTION DRAWINGS ISSUED FOR:

- ☐ PRELIMINARY
- ☐ MUNICIPAL REVIEW
- ☐ BID SET
- ■ CONSTRUCTION DOCUMENTS

CCE - CAPITAL CIVIL ENGINEERING -
209 N SALEM ST, STE 220, APEX, NC 27502
PH 919 249-8587 FX 919 590-1687

COPYRIGHT 2023 CAPITAL CIVIL ENGINEERING, PLLC P-0809

Revisions: 5/21/2025 - TOWN AND CLIENT COMMENTS

Scale:
Date: 5/21/2025
Drawn By: MPM

SMALL ENGINE REPAIR
ANGIER INDUSTRIAL PARK - LOT 8
189 PROGRESSIVE PARKWAY
ANGIER NC 27501

COVER SHEET AND EXISTING CONDITIONS

Certified By:
5/21/2025

Drawing Number:
C1

A/E Job Number:
142-001

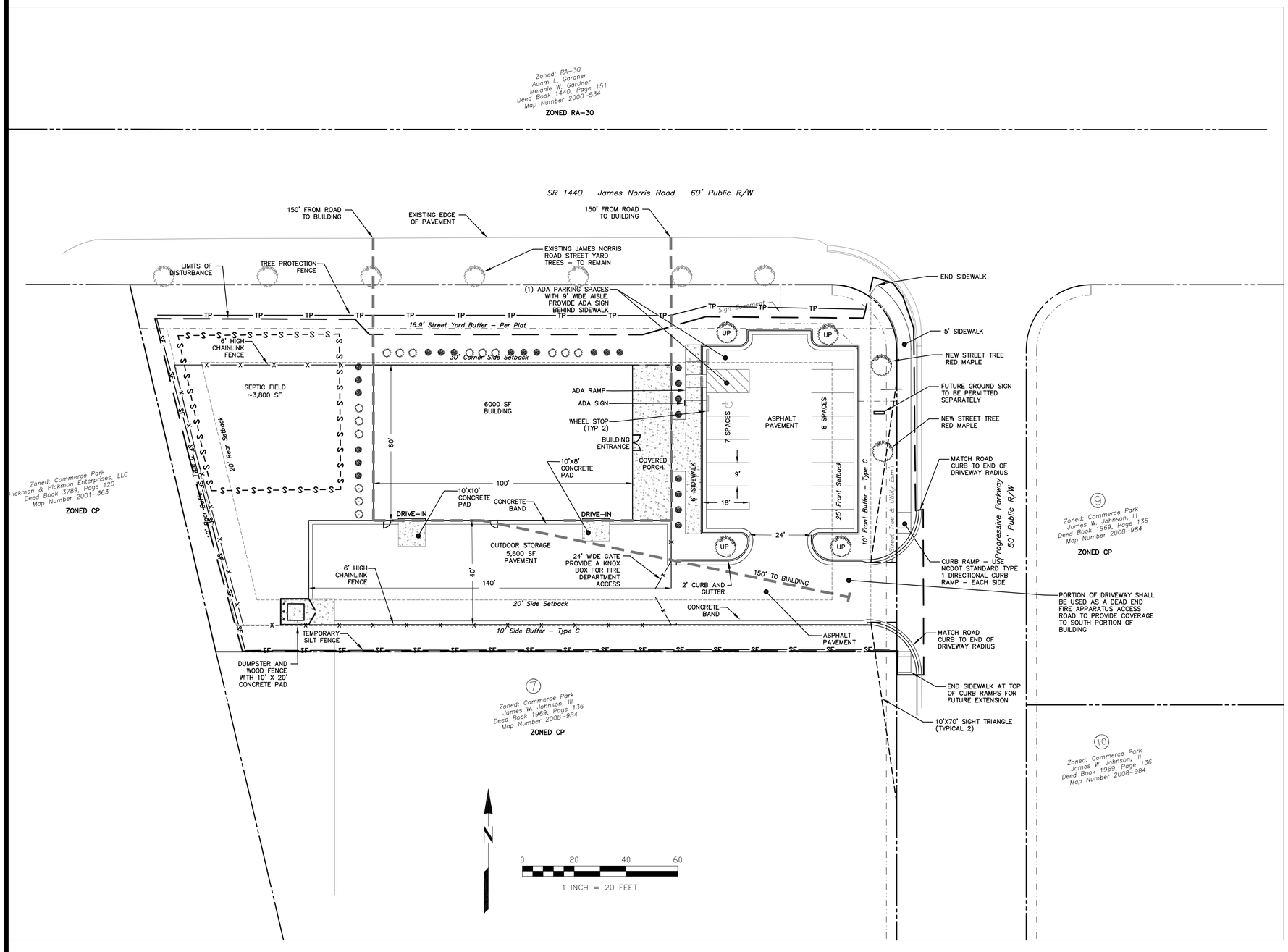

SITE DATA

SITE ADDRESS:	189 PROGRESSIVE WAY ANGIER NC 27501
PIN:	0673.04-2122.000
PID:	040673 0070 09
DEED BOOK AND PAGE:	BK 4246; PG 1912
TOTAL SITE AREA:	0.906 ACRES
TOTAL DISTURBED AREA:	0.8 ACRES
IMPERVIOUS AREA	
EXISTING:	0 ACRES
PROPOSED:	0.48 ACRES
IMPERVIOUS %:	53%
IMPERVIOUS ALLOWED %:	60%
PROPERTY ZONING:	CP
PROPOSED USE:	SMALL ENGINE REPAIR
HOURS OF OPERATION:	MONDAY - FRIDAY 8AM - 5PM SATURDAY 8AM - NOON
NEW BUILDING AREA:	6,000 SF
RETAIL:	3,000 SF
REPAIR:	3,000 SF
PARKING REQUIRED:	
RETAIL - 1 PER 200 SF	15 SPACES
REPAIR - 1 PER 2 EMPLOYEES	1 SPACE
TOTAL REQUIRED:	16 SPACES
PARKING PROVIDED:	15 SPACES (REDUCED 6%)
ADA PARKING REQUIRED:	1 VAN ACCESSIBLE
ADA PARKING PROVIDED:	1 VAN ACCESSIBLE

BUFFERS

PROPOSED USE: EQUIPMENT AND /OR MACHINERY REPAIR AND SERVICE: USE GROUP 4

ADJACENT USES:
SOUTH: ZONED CP: USE GROUP 4
WEST: ZONED CP: USE GROUP 4

WEST BUFFER: 10', TYPE C
SOUTH BUFFER: 10', TYPE C

SITE NOTES

1. ALL ONSITE DIMENSIONS ARE TO EDGE OF PAVEMENT OR FACE OF CURB.
2. ALL CONSTRUCTION TO BE PERFORMED TO TOWN OF ANGIER STANDARDS, SPECIFICATIONS AND DETAILS AS APPLICABLE
3. CONTRACTOR SHALL SECURE ALL NECESSARY PERMITS FOR CONSTRUCTION SHOWN ON THESE PLANS.
4. CONTRACTOR SHALL COORDINATE WITH UTILITY LOCATOR TO VERIFY LOCATION OF ALL UNDERGROUND UTILITIES PRIOR TO ANY WORK.
5. CONTRACTOR SHALL, AT ALL TIMES, MAINTAIN ADEQUATE SAFETY MEASURES, ACTIVITIES AND BARRACADES FOR THE PROTECTION OF ALL PERSONS ON OR ABOUT THE LOCATION OF THE SITE.
6. DUMPSTER REMOVAL SHALL BE DONE BY A PRIVATE COLLECTION COMPANY.
7. ALL PAVEMENT STRIPING SHALL BE WHITE
8. NC DEQ EROSION PERMIT NOT REQUIRED AS THE DISTURBED AREA IS LESS THAN 1.0 ACRES

LANDSCAPE REQUIRMENTS

PROVIDE MULCH AROUND ALL NEW LANDSCAPING

BUFFERYARD REQUIREMENTS:

STREET YARD LANDSCAPING

JAMES NORRIS ROAD - EXISITING YOSHINO CHERRY
PROGRESSIVE PARKWAY - ONE EXISTING RED MAPLE AND ONE NEW RED MAPLE

SOUTH AND WEST ADJACENT PARCELS BOTH ZONED CP
NO PLANTINGS REQUIRED

PARKING LOT LANDSCAPING

ONE CANOPY TREE WITHIN 60 OF EVERY PARKING SPACE
PROVIDE FOUR TREES PER LANDSCAPE PLANT LIST

DUMPSTER REQUIREMENTS:

SCREENED ON THREE SIDES BY A 6' TALL SOLID WOOD FENCE WITH A SOLD WOOD GATE

LANDSCAPE PLANT LIST

ULMUS PARVIFOLIA (UP)- LACEBARK ELM - 2" CALIPER

SHRUB - 18" HIGH
ILEX CORNUTA 'CARISSA' - CARISSA HOLLY

SHRUB - 18" HIGH
PRUNUS LAUROCERASUS -DWARF ENGLISH LAUREL

Know what's below. Call before you dig.

CONSTRUCTION DRAWINGS ISSUED FOR:
- ☐ PRELIMINARY
- ☐ MUNICIPAL REVIEW
- ☐ BID SET
- ■ CONSTRUCTION DOCUMENTS

CCE
- CAPITAL CIVIL ENGINEERING -
209 N SALEM ST, STE 220, APEX, NC 27502
PH 919 249-8587 FX 919 590-1687

COPYRIGHT 2023 CAPITAL CIVIL ENGINEERING, PLLC P-0809

Revisions: 5/21/2025 - TOWN AND CLIENT COMMENTS

Scale:
Date: 5/21/2025
Drawn By: MPM

SMALL ENGINE REPAIR
ANGIER INDUSTRIAL PARK - LOT 8
189 PROGRESSIVE PARKWAY
ANGIER NC 27501

SITE AND LANDSCAPE PLAN

Certified By:
5/21/2025

Drawing Number:
C2

A/E Job Number:
142-001

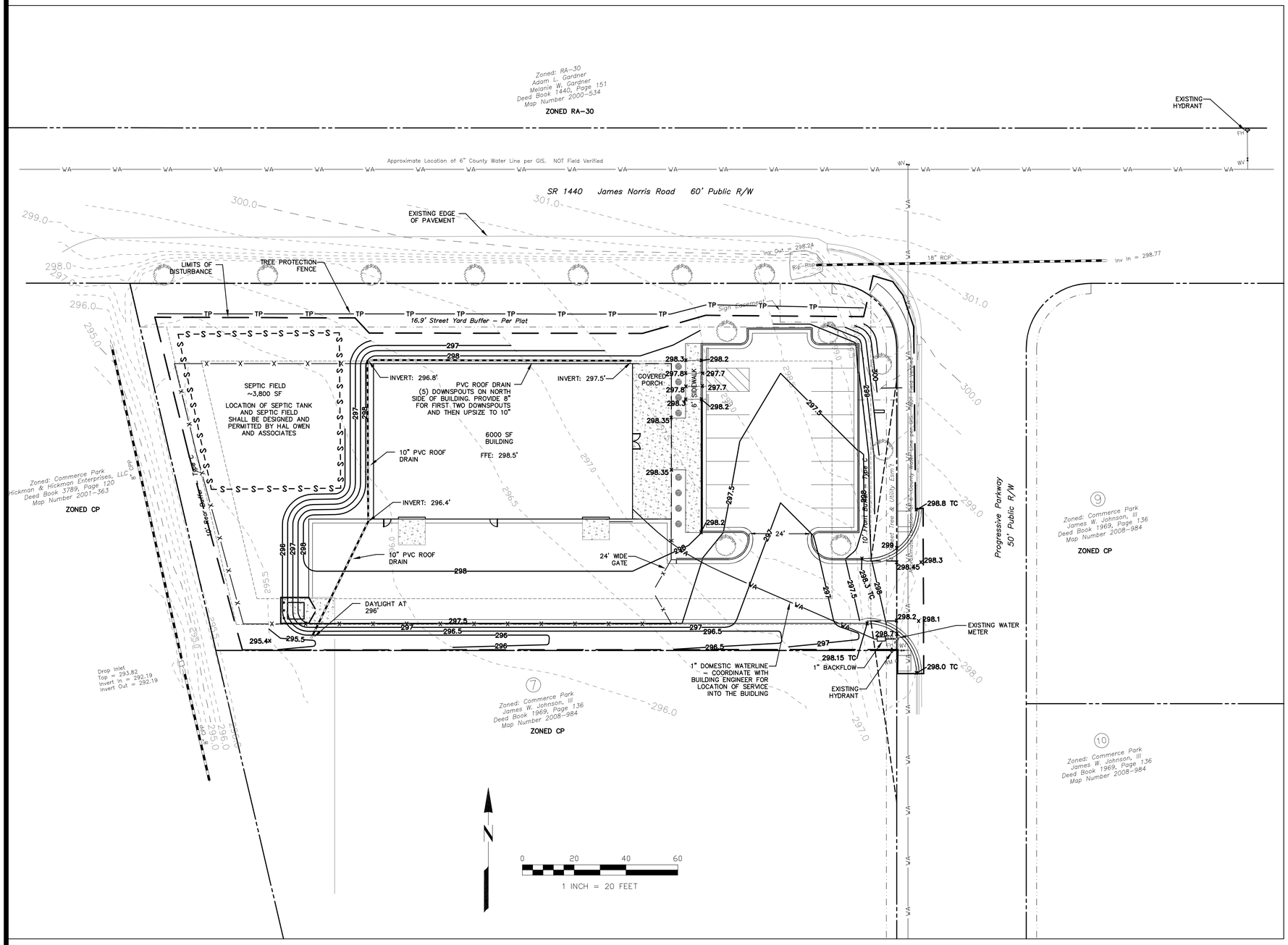

ADA ACCESS NOTES:

ALL ADA ACCESSIBLE LOCATIONS ARE SHOWN ON THE PLAN. THEY INCLUDE, BUT ARE NOT LIMITED TO; ADA PARKING SPACES, SIDEWALK BETWEEN ADA PARKING SPACES AND MAIN BUILDING ENTRANCE.

ADA PARKING SPACE MAXIMUM SLOPE IN ANY DIRECTION IS 2%. THIS INCLUDES ALL ADA PARKING SPACES AND ACCESS AISLES.

ADA ROUTES MAXIMUM RUNNING SLOPE IS 5% AND MAXIMUM CROSS SLOPE IS 2%.

CONTRACTOR SHALL PREPARE FORMS FOR ADA SIDEWALKS. PRIOR TO POURING CONCRETE, CONTRACTOR SHALL VERIFY RUNNING SLOPE AND CROSS SLOPE OF ADA SIDEWALKS. A SMART LEVEL DEVICE SHALL BE USED TO VERIFY THESE SLOPES.

UPON COMPLETION OF OF ALL ADA AREAS (INCLUDING PARKING SPACE AND ACCESSAISLES), CONTRACTOR SHALL ONCE AGAIN VERIFY THE RUNNING AND CROSS SLOPE OF THESE AREAS WITH A SMART LEVEL. ANY REPAIRS MADE SHALL BE THE SOLE RESPONSIBILITY OF THE CONTRACTOR.

UTILITY NOTES:

REFER TO JOHNSTON COUNTY SPECIFICATIONS FOR WATER AND SEWER SERVICE CONNECTIONS.

Know what's below. Call before you dig.

CONSTRUCTION DRAWINGS ISSUED FOR:
- ☐ PRELIMINARY
- ☐ MUNICIPAL REVIEW
- ☐ BID SET
- ■ CONSTRUCTION DOCUMENTS

CCE
- CAPITAL CIVIL ENGINEERING -
209 N SALEM ST, STE 220, APEX, NC 27502
PH 919 249-8587 FX 919 590-1687

COPYRIGHT 2023 CAPITAL CIVIL ENGINEERING, PLLC P-0809

Revisions: 5/21/2025 - TOWN AND CLIENT COMMENTS

Scale:

Date: 5/21/2025

Drawn By: MPM

SMALL ENGINE REPAIR
ANGIER INDUSTRIAL PARK - LOT 8
189 PROGRESSIVE PARKWAY
ANGIER NC 27501
GRADING AND UTILITY PLAN

Certified By:

NORTH CAROLINA PROFESSIONAL ENGINEER SEAL 036161 MATTHEW P. MOORE
5/21/2025

Drawing Number: **C3**

A/E Job Number: **142-001**

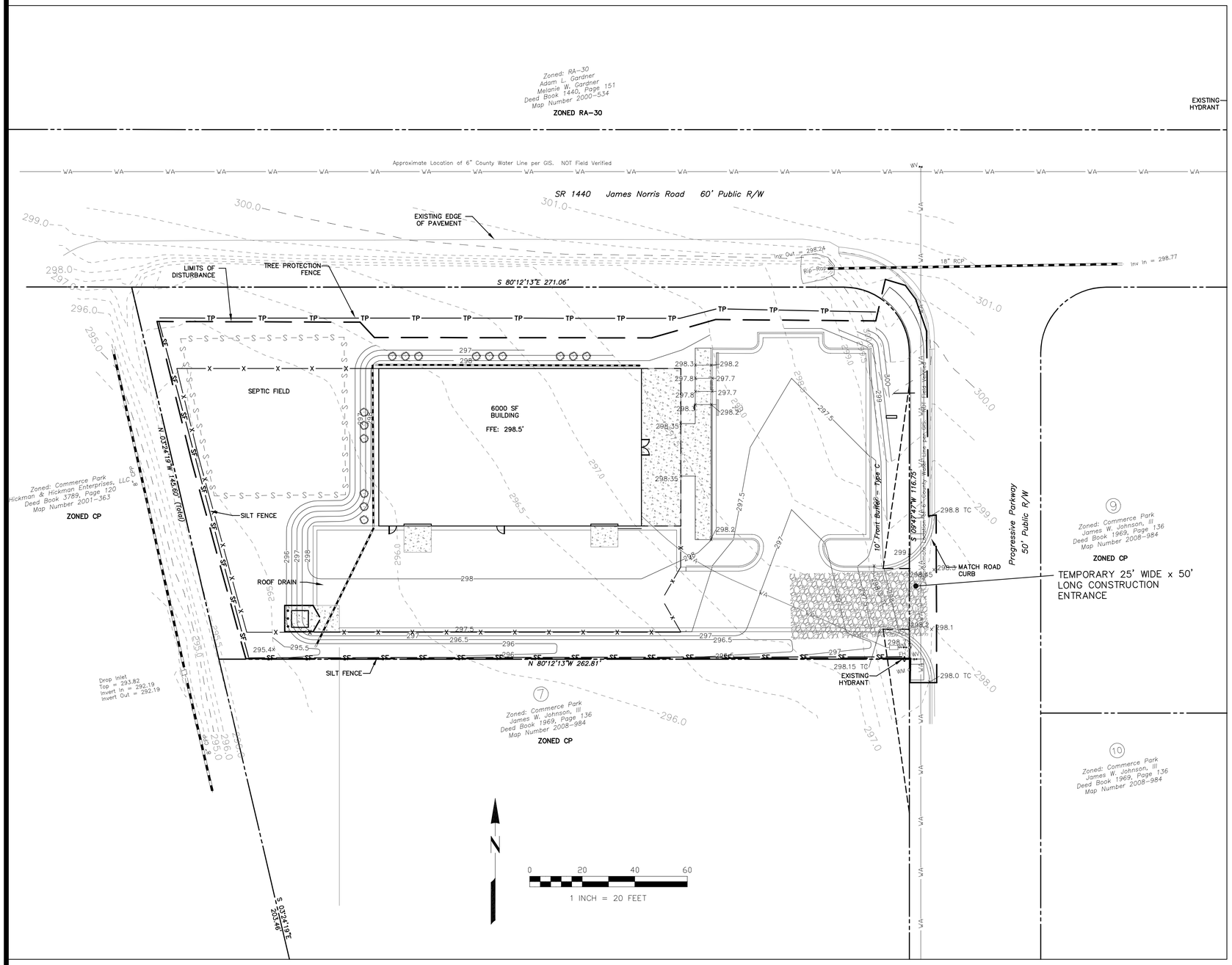

NOTES:

1. THIS PROJECT IS SUBJECT TO THE NORTH CAROLINA DIVISION OF LAND RESOURCES SELF F INSPECTION PROGRAM. AN EROSION CONTROL INSPECTION IS REQUIRED AFTER EACH PHASE OF GRADING AND THE INSPECTION DOCUMENTED IN WRITING.
2. ANY FINISHED GRADES WITH A SLOPE BETWEEN 2:1 AND 3:1 SHALL BE REINFORCED WITH 2 YEAR BIODEGRADABLE EROSION CONTROL MATTING. USE LANDLOK CS1 EROSION CONTROL BLANKET OR EQUAL. EROSION CONTROL MATTING SHALL BE INSTALLED PER MANUFACTURES RECOMMENDATIONS.

TOTAL DISTURBED AREA = 0.80 ACRES
NC DEQ EROSION PERMIT NOT REQUIRED

CONSTRUCTION SEQUENCE

1. LIMITS OF DISTURBANCE IS LESS THAN 1.0 ACRES, NO EROSION CONTROL PERMIT IS REQUIRED
2. INSTALL GRAVEL CONSTRUCTION PAD, SILT FENCE, SILT FENCE OUTLET OR OTHER MEASURES AS SHOWN ON THE APPROVED PLAN. CLEAR ONLY AS NECESSARY TO INSTALL THESE DEVICES.
3. BEGIN CLEARING AND GRUBBING. MAINTAIN DEVICES AS NEEDED.
4. ROUGH GRADE SITE.
5. BEGIN CONSTRUCTION, BUILDING, ETC.
6. STABILIZE SITE AS AREAS ARE BROUGHT UP TO FINISH GRADE WITH VEGETATION, PAVING, DITCH LININGS, ETC. SEED AND MULCH DENUDED AREAS ANYTIME GRADE IS UNDISTURBED FOR 7 DAYS OR MORE.
7. WHEN CONSTRUCTION IS COMPLETE AND ALL AREAS ARE STABILIZED COMPLETELY, REMOVE CONSTRUCTION ENTRANCE, SILT FENCE, SILT FENCE OUTLET, ETC., AND SEED OUT OR STABILIZE ANY RESULTING BARE AREAS.

EROSION CONTROL NOTES AND MAINTENANCE

PRIOR TO SEEDING, TILL THE AREA TO A MINIMUM OF 4". REMOVE STONES LARGER THAN 3", STICKS, ROOTS OR ANY OTHER MATERIAL THAT ARE PRESENT. ADD LIME, FERTILIZER, SEED, STRAW MULCH, ETC. PER THE SEEDING SPECIFICATIONS

CONSTRUCTION ENTRANCE MAINTENANCE:
- INSPECT AND CLEAN PAD AS NECESSARY ONCE A WEEK AND AFTER EACH RAINFALL
- WASH STONE OR TOPDRESS AS NECESSARY TO PREVENT MATERIAL FROM ENTERING PUBLIC ROADWAYS.

SILT FENCE MAINTENANCE:
- INSPECT ONCE A WEEK AND AFTER EACH RAINFALL. REPAIR AS NECESSARY.
- REPAIR FENCE IF IT SHOW SIGNS OF TEARS, COLLAPSE OR DECOMPOSITION.
- REMOVE SEDIMENT DEPOSITS AS NECESSARY TO PROVIDE ADEQUATE STORAGE VOLUME OR REDUCE STRESS.

CONTRACTOR SHALL KEEP WRITTEN RECORDS OF ALL EROSION CONTROL INSPECTIONS AND MAINTENANCE PERFORMED.

Seeding
Seedbed Preparation:

1. Chisel compacted areas and spread topsoil three inches deep over adverse soil conditions, if available.
2. Rip the entire area to six inches deep.
3. Remove all loose rock, roots and other obstructions, leaving surface reasonably smooth and uniform.
4. Apply agricultural lime, fertilizer and superphosphate uniformly and mix with soil (see mixture).
5. Continue tillage until a well-pulverized, firm, reasonably uniform seedbed is prepared four to six inches deep.
6. Seed on a freshly prepared seedbed and cover seed lightly with seeding equipment or cultipack after seeding.
7. Mulch immediately after seeding and anchor mulch.
8. Inspect all seeded areas and make necessary repairs or reseedings within the planting season, if possible. If stand should be more than 60% damaged, re-establish following the original lime, fertilizer and seeding rates.
9. Consult S&EC Environmental Engineers on maintenance treatment and fertilization after permanent cover is established.

Mixture
Agricultural Limestone 2 tons/acre (3 tons/acre in clay soils)
Fertilizer 1,000 lbs/acre – 10–10–10, Superphosphate 500 lbs/acre – 20% analysis
Mulch 2 tons/acre – small grain straw, Anchor Asphalt Emulsion at 300 gals/acre

Seeding Schedule
For Shoulders, Side Ditches, Slopes (Max 3:1)

Date	Type	Planting Rate
Aug 15 – Nov 1	Tall Fescue	300 lbs/acre
Nov 1 – Mar 1	Tall Fescue & Abruzzi Rye	300 lbs/acre
Mar 1 – Apr 15	Tall Fescue	300 lbs/acre
Apr 15 – Jun 30	Hulled Common Bermudagrass	25 lbs/acre
Jul 1 – Aug 15	Tall Fescue AND Browntop Millet or Sorghum–Sudan Hybrids***	125 lbs/acre (Tall Fescue); 35 lbs/acre(Browntop Millet); 30 lbs/acre(Sorghum–Sudan Hybrids)

*Consult S&EC Environmental Engineers for additional information concerning other alternatives for vegetation of denuded areas. The above vegetation rates are those that do well under local conditions; other seeding rate combinations are possible.

*** Temporary: Reseed according to optimum season for desired permanent vegetation. Do not allow temporary cover to grow over 12' in height before mowing, otherwise fescue may be shaded out.

Know what's below. Call before you dig.

CONSTRUCTION DRAWINGS ISSUED FOR:
- ☐ PRELIMINARY
- ☐ MUNICIPAL REVIEW
- ☐ BID SET
- ■ CONSTRUCTION DOCUMENTS

CCE
- CAPITAL CIVIL ENGINEERING -
209 N SALEM ST, STE 220, APEX, NC 27502
PH 919 249-8587 FX 919 590-1687

COPYRIGHT 2023 CAPITAL CIVIL ENGINEERING, PLLC P-0809

Revisions: 5/21/2025 – TOWN AND CLIENT COMMENTS

Scale:
Date: 5/21/2025
Drawn By: MPM

SMALL ENGINE REPAIR
ANGIER INDUSTRIAL PARK - LOT 8
189 PROGRESSIVE PARKWAY
ANGIER NC 27501
EROSION CONTROL PLAN

Certified By:
NORTH CAROLINA PROFESSIONAL ENGINEER SEAL
5/21/2025

Drawing Number: C4

A/E Job Number: 142-001

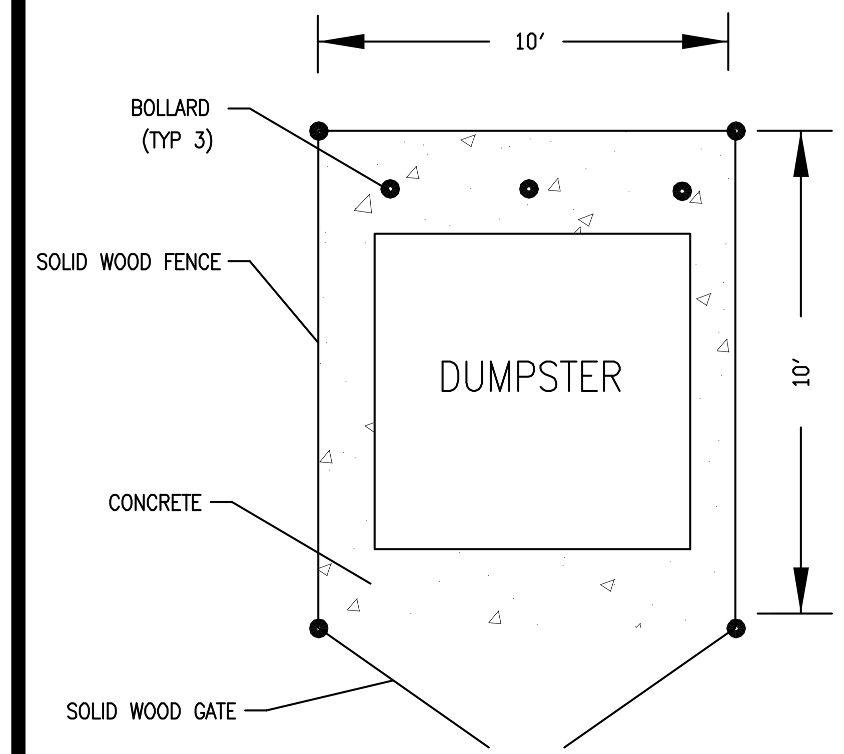

DUMPSTER ENCLOSURE
NTS

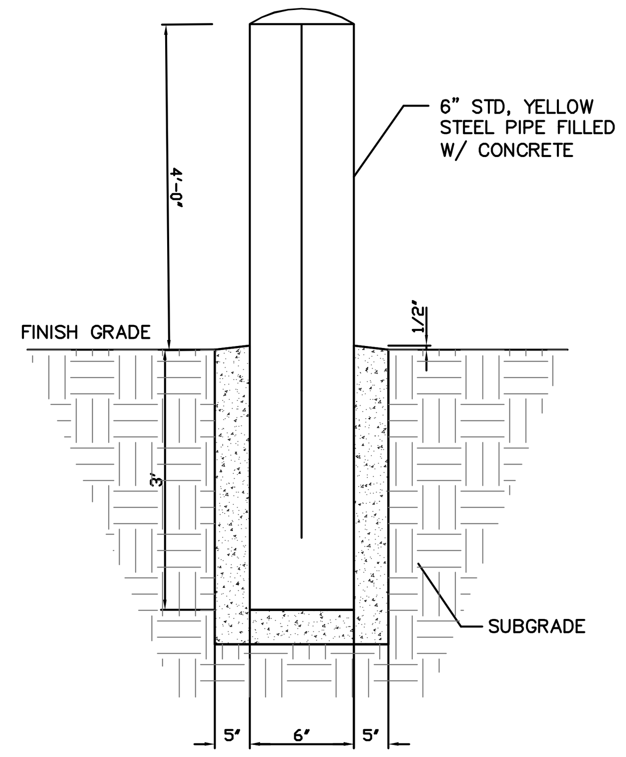

TYPICAL BOLLARD DETAIL
NTS

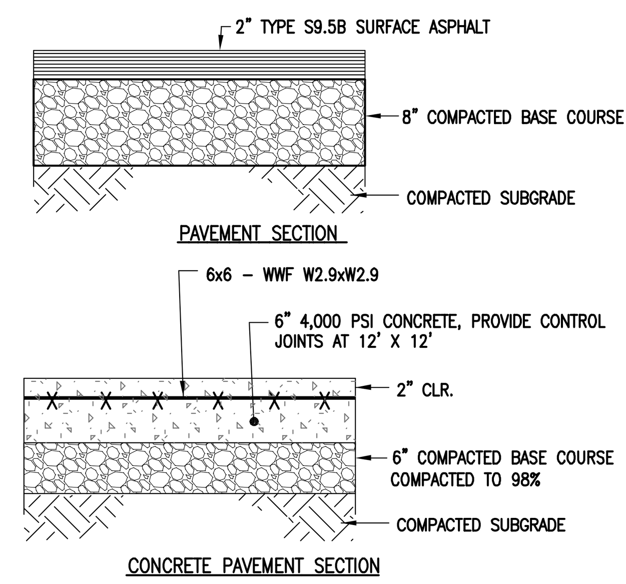

PAVING SECTIONS

NOTES:
1. COMPACTED SUBGRADE TO A DENSITY OF NO LESS THAN 95% OF MAXIMUM STANDARD PROCTOR DRY DENSITY AS DETERMINED BY AASHTO METHOD T99.
2. COMPACTED ASPHALT TO A DENSITY OF 92 PERCENT OF REFERENCE MAXIMUM THEORETICAL DENSITY ACCORDING TO ASTM D 2041, BUT NOT LESS THAN 90 PERCENT NOR GREATER THAN 96 PERCENT.
3. PAVEMENT THICKNESS SHALL BE CONFIRMED DURING CONSTRUCTION WITH CBR PENETRATION TESTS.

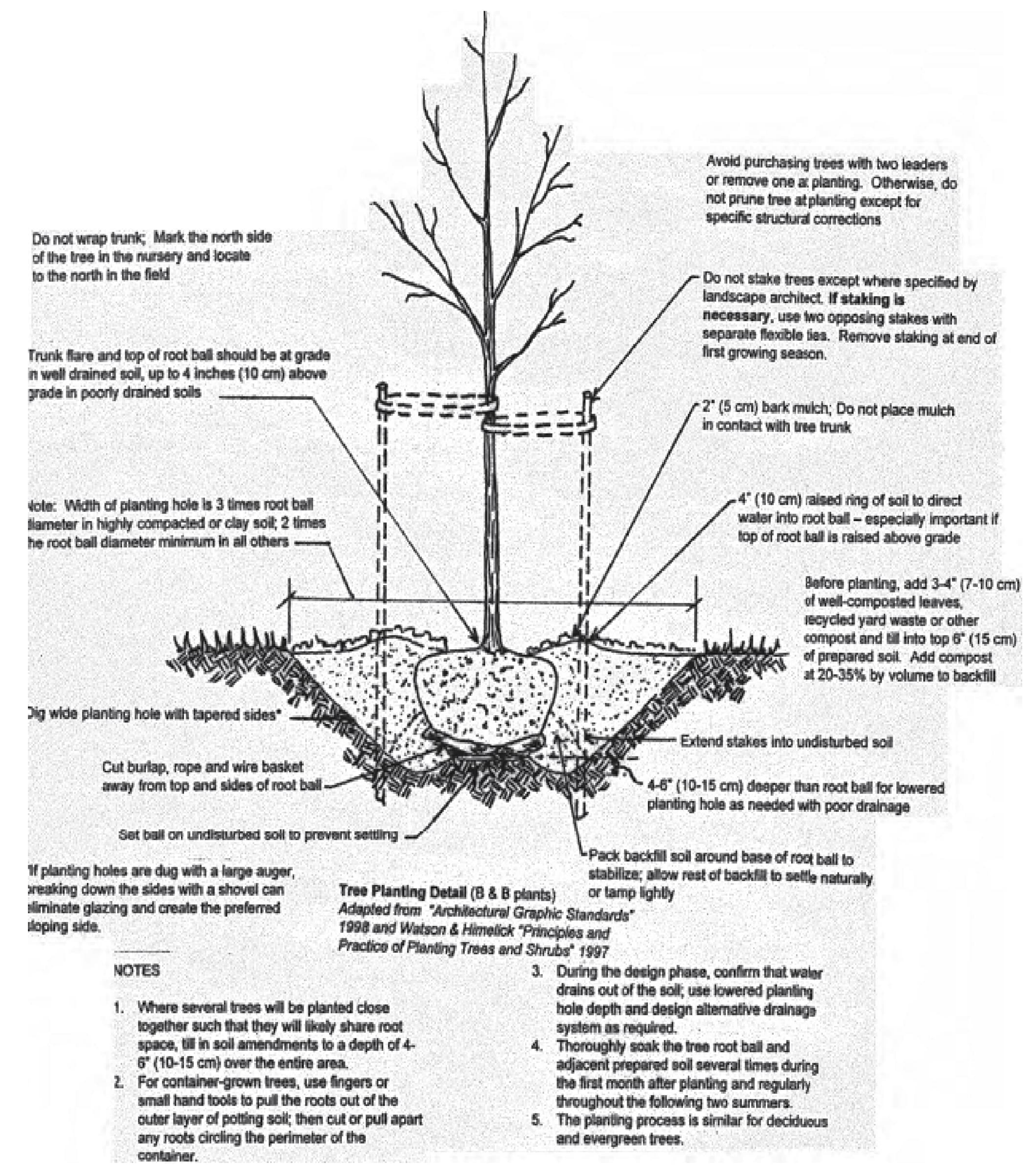

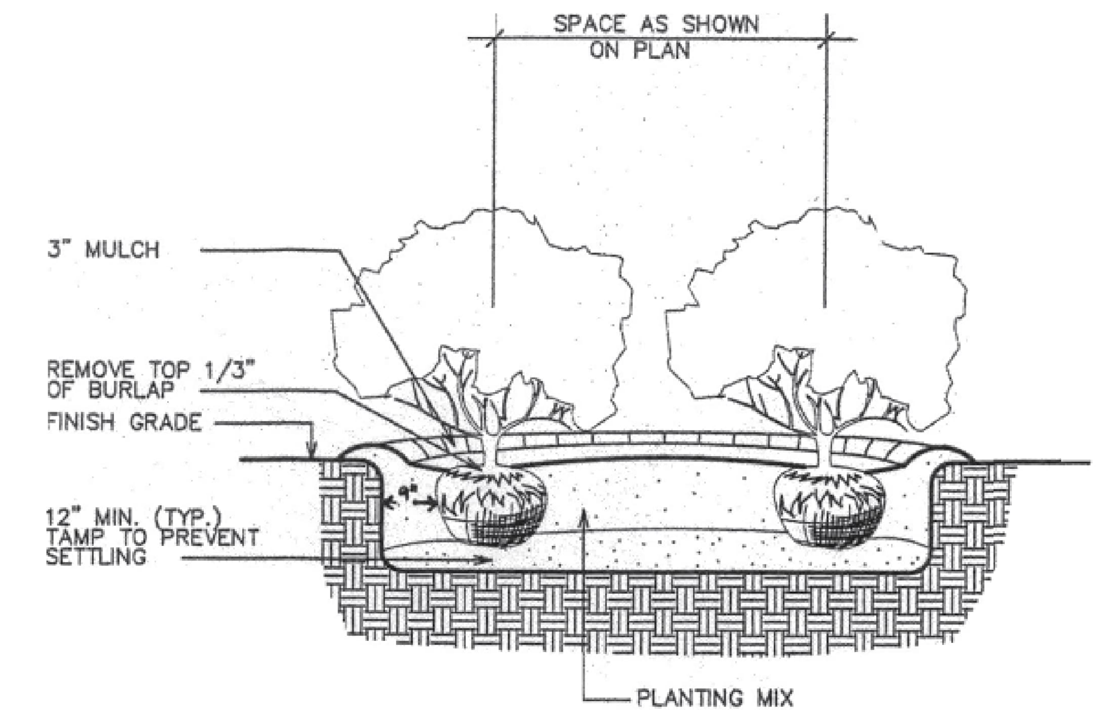

SHRUB/GROUND COVER PLANTING DETAIL
NOT TO SCALE

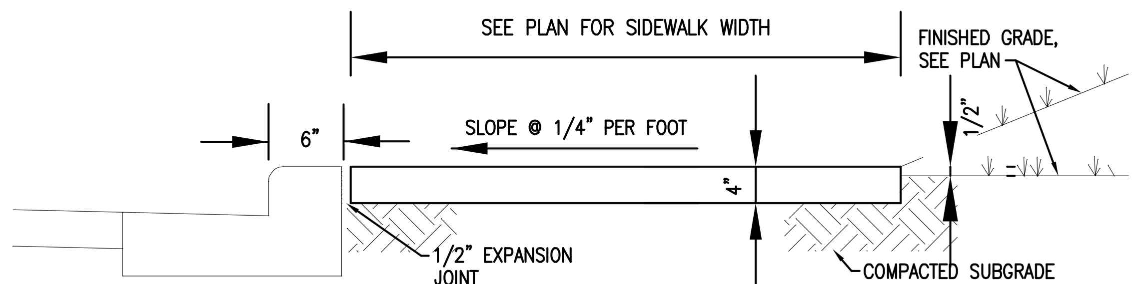

NOTES:

1. FOR SPACING OF CONTROL AND CONSTRUCTION JOINTS, SEE SPECIFICATIONS AND CONCRETE SIDEWALK JOINT LAYOUT DETAIL, THIS SHEET.

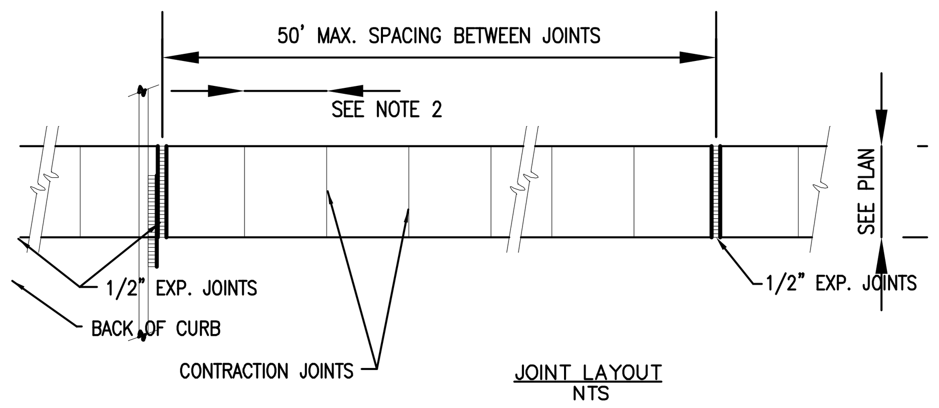

JOINT LAYOUT
NTS

NOTES:

1. ALL SIDEWALKS SHALL BE 4" THICK, EXCEPT AS NOTED.
2. CONTRACTION JOINTS SHALL BE SPACED AT 4'–0" INTERVALS FOR 4' SIDEWALKS, 5'–0" INTERVALS FOR 5' SIDEWALK, AND 6'–0" INTERVALS FOR 6'–8' SIDEWALKS.
3. CONTRACTION JOINTS SHALL BE 1" DEEP AND EDGED WITH 1/8" RADIUS.
4. 1/2" EXPANSION MATERIAL WHERE CONCRETE SIDEWALK ABUTS CONCRETE STRUCTURE.
5. A LAYER OF 15# FELT IS REQUIRED BETWEEN WALK AND ADJACENT PARALLELING CONCRETE CURB.

CONCRETE SIDEWALK
NTS

DETECTABLE WARNING DOMES

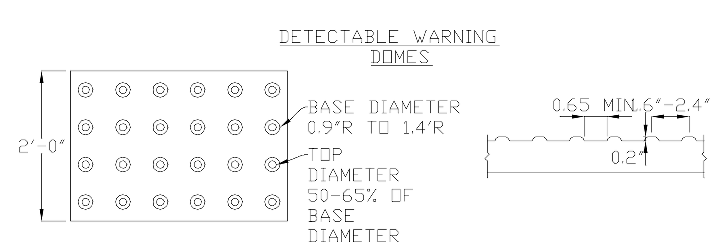

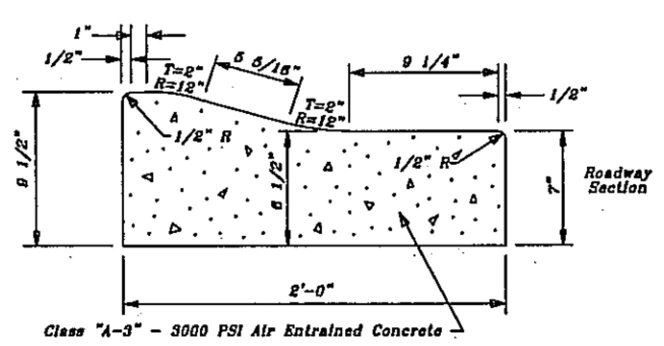

TYPICAL SECTION OF ROLL
24" COMBINATION CONCRETE CURB & GUTTER

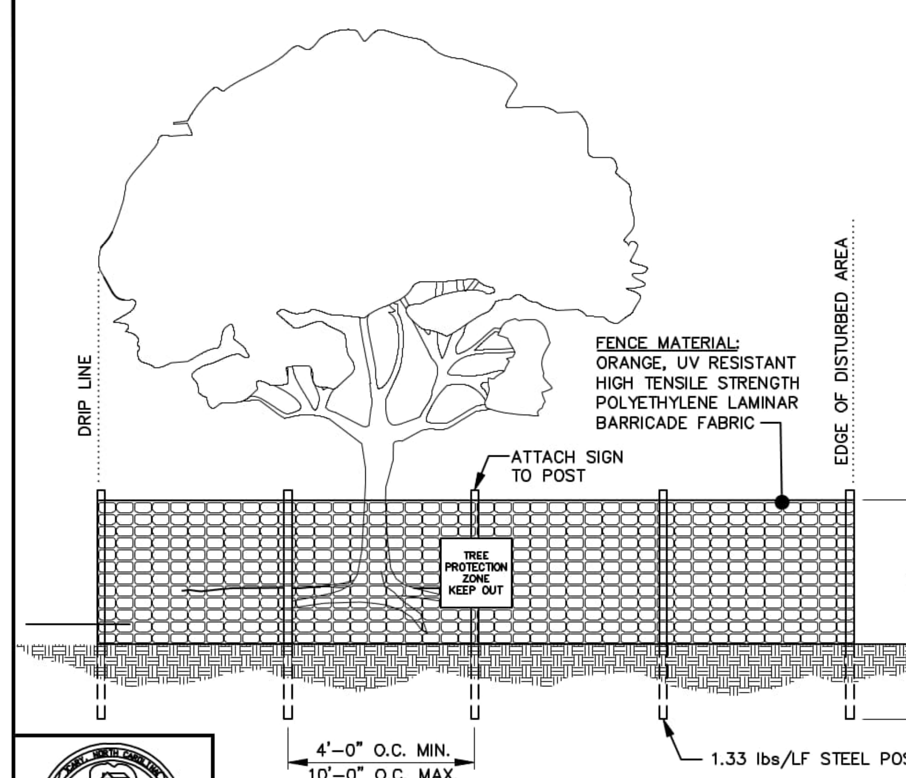

NOTES:

1. ALL PLANTS DESIGNATED TO BE SAVED SHALL BE PROTECTED BY FENCING, AS ILLUSTRATED.
2. INSTALL TREE PROTECTION FENCE AT TREE DRIP LINE OR AT EDGE OF DISTURBED AREA, AS SHOWN ON PLANS, PRIOR TO CLEARING, DELIVERIES, AND OTHER CONSTRUCTION ACTIVITIES BEGINNING ON THE SITE.
3. SPACE TREE PROTECTION ZONE SIGNS A MINIMUM OF ONE EVERY 300 FEET. THE SIZE OF EACH SIGN MUST BE A MINIMUM OF 2' x 2' AND BE VISIBLE FROM BOTH SIDES OF THE FENCE. THE SIGN MUST CONTAIN THE FOLLOWING LANGUAGE IN BOTH ENGLISH & SPANISH: "TREE PROTECTION ZONE, KEEP OUT".
4. THERE SHALL BE NO STORAGE OF MATERIAL WITHIN THE BOUNDARIES OF THE TREE PROTECTION FENCING.

MAINTENANCE:

1. TREE PROTECTION FENCE SHOULD BE INSPECTED WEEKLY.
2. TREE PROTECTION FENCING SHALL BE MAINTAINED THROUGHOUT THE DURATION OF THE PROJECT. REPAIR AND REPLACE TREE PROTECTION FENCE AS NEEDED.

NTS

EFFECTIVE: 07/01/24

TREE PROTECTION FENCE

DETAIL No.
5000.03

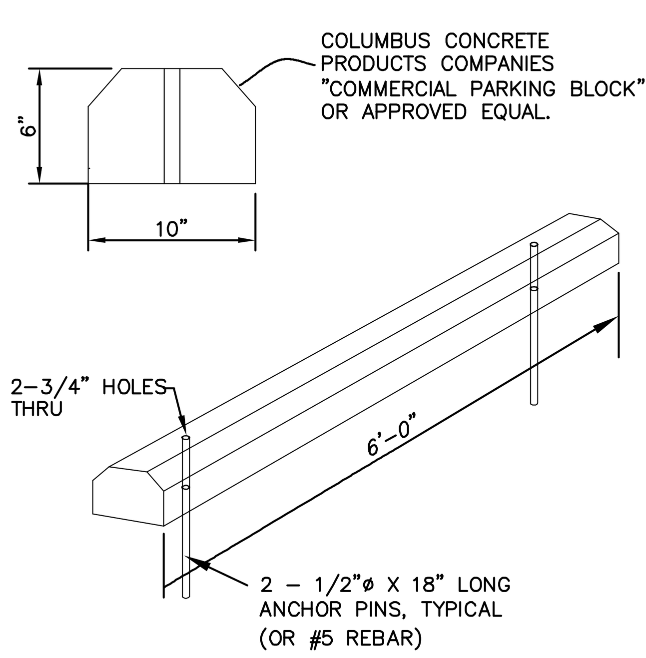

PARKING BLOCK DETAIL
NTS

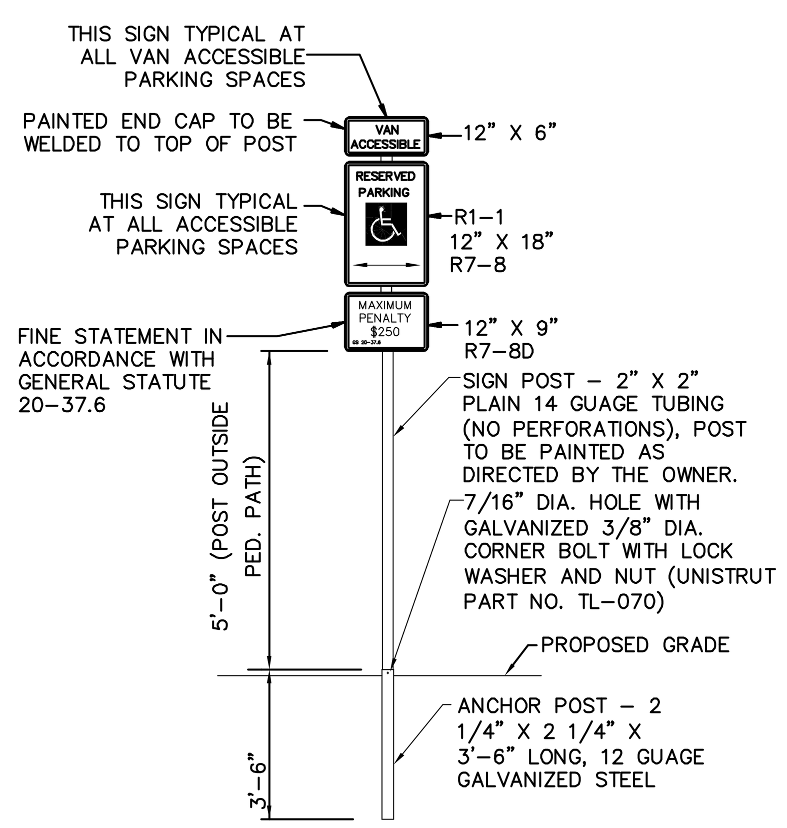

TYPICAL HANDICAP SIGN DETAIL
NTS

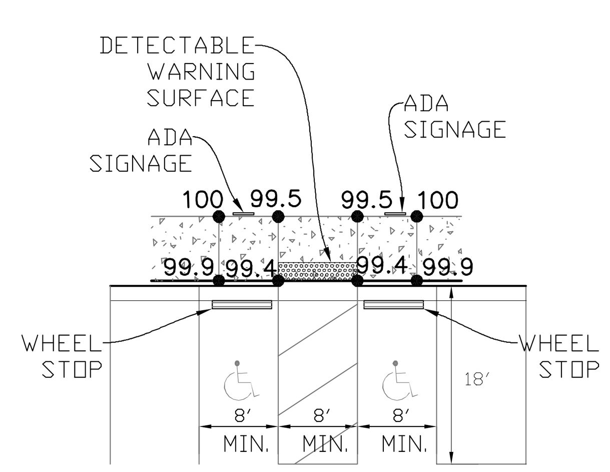

ADA RAMP TO PARKING SPACES

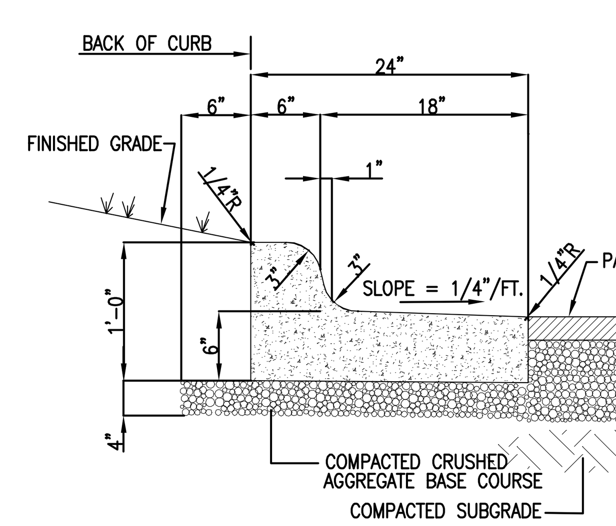

24" PARKING LOT CURB AND GUTTER
NTS

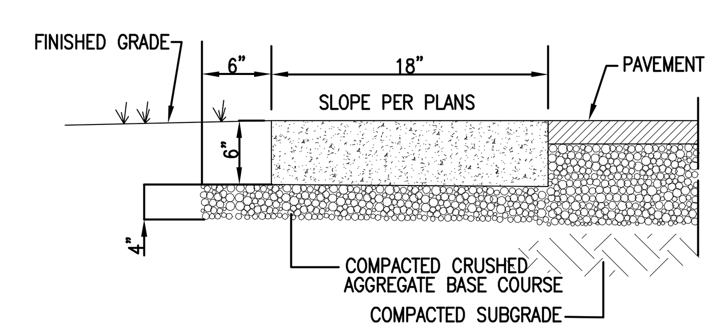

PARKING LOT CONCRETE BAND
NTS

Know what's **below.**
Call before you dig.

CONSTRUCTION DRAWINGS ISSUED FOR:
- ☐ PRELIMINARY
- ☐ MUNICIPAL REVIEW
- ☐ BID SET
- ■ CONSTRUCTION DOCUMENTS

- CAPITAL CIVIL ENGINEERING -

209 N SALEM ST, STE 220, APEX, NC 27502
PH 919 249–8587 FX 919 590–1687

COPYRIGHT 2023 CAPITAL CIVIL ENGINEERING, PLLC P–0809

Revisions:
5/21/2025 – TOWN AND CLIENT COMMENTS

Scale:

Date: **5/21/2025**

Drawn By: **MPM**

SMALL ENGINE REPAIR
ANGIER INDUSTRIAL PARK - LOT 8
189 PROGRESSIVE PARKWAY
ANGIER NC 27501

SITE DETAILS

Certified By:

NORTH CAROLINA PROFESSIONAL SEAL 029395 ENGINEER MICHAEL P. McQUILLEN
5/21/2025

Drawing Number: **C5**

A/E Job Number: **142-001**

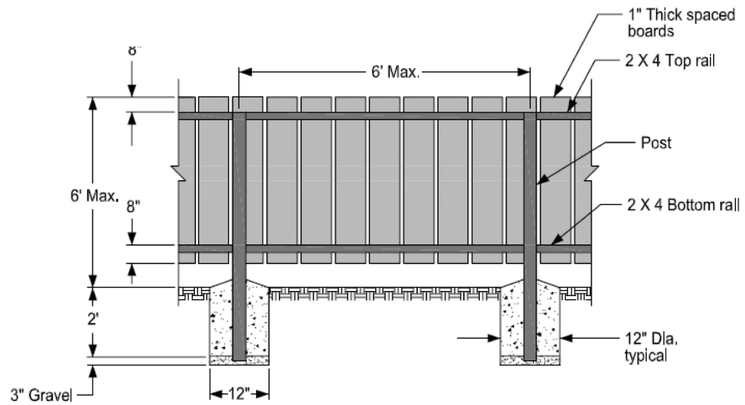

WOOD FENCE DETAIL

NTS

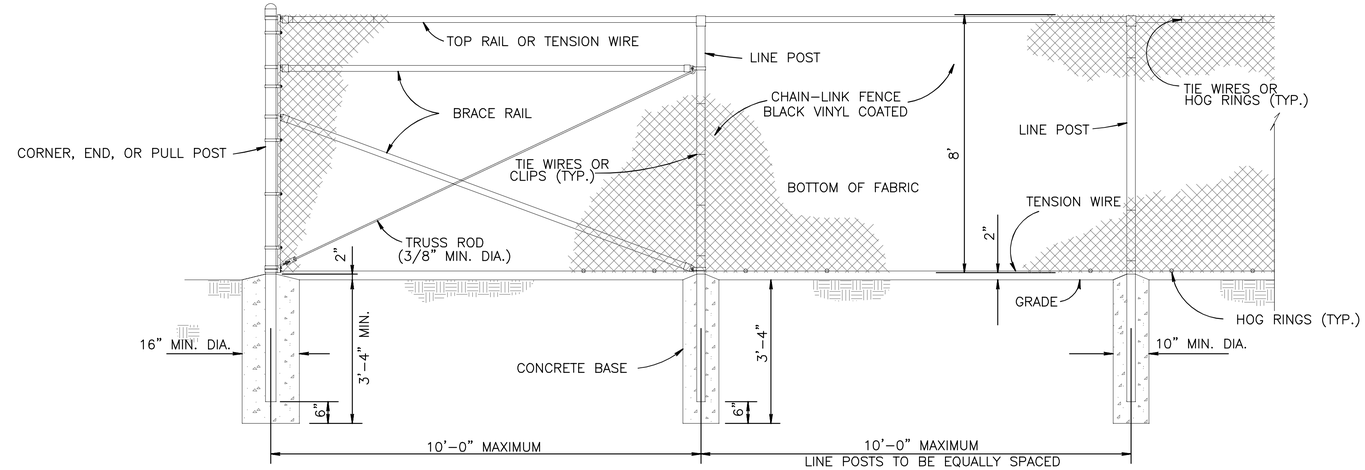

6' HIGH CHAIN-LINK FENCE DETAIL

FENCE DETAILS NOT TO BE USED FOR CONSTRUCTION – FOR REFERENCE ONLY

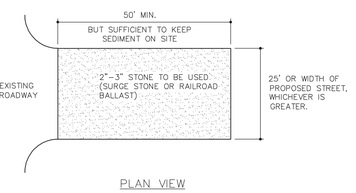

PLAN VIEW

NOTES:
1. INSTALL SILT FENCE OR TREE PROTECTION FENCE TO ENSURE CONSTRUCTION ENTRANCE IS USED BY VEHICLES.
2. IF MUD IS NOT REMOVED FROM TIRES AFTER VEHICLE TRAVELS OVER STONE, THE TIRES OF THE VEHICLE MUST BE WASHED BEFORE ENTERING PUBLIC ROADS.i

MAINTENANCE NOTES:
1. THE GRAVEL CONSTRUCTION ENTRANCE MUST BE MAINTAINED IN A CONDITION TO PREVENT TRACKING OR DIRECT FLOW OF MUD ONTO ADJACENT ROADWAYS.
2. REPLACEMENT OF STONE MAY BE NECESSARY TO ENSURE THE GRAVEL ENTRANCE FUNCTIONS PROPERLY.
3. REPLENISHMENT OF STONE MAY BE NECESSARY.
4. FREQUENT CHECKS OF THE DEVICE AND TIMELY MAINTENANCE SHOULD BE COMPLETED.
5. ANY MATERIAL TRACKED ONTO THE ROADWAY SHALL BE CLEANED UP IMMEDIATELY.

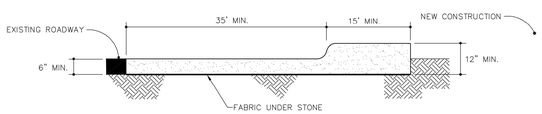

CROSS SECTION

WAKE COUNTY NORTH CAROLINA

EFFECTIVE: 01/31/08

STANDARD CONSTRUCTION ENTRANCE

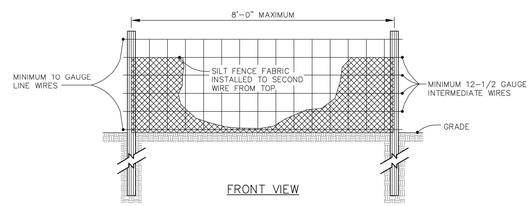

FRONT VIEW

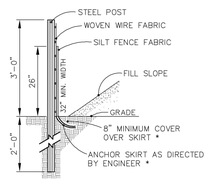

SIDE VIEW

MAINTENANCE NOTES:
1. INSPECT BAG AFTER EACH SIGNIFICANT RAINFALL OF 1 INCHES OR GREATER, OVER A 24–HOUR PERIOD.L MAKE ANY REPAIRS IMMEDIATELY.
2. INSPECT THE SILT FENCE TO BE SURE THE BOTTOM OF THE
3. GEOTEXTILE IS KEYED IN PROPERLY.
4. AT A MINIMUM, REMOVE AND DISPOSE OF ALL SILT ACCUMULATIONS WHEN DEPTH REACHES 1/2 THE HEIGHT OF THE GEOTEXTILE. DO NOT UNDERMINE THE FENCE DURING CLEANOUT.
5. DISPOSE OF SEDIMENT BY HAULING IT TO AN APPROVED WASTE SITE WITH APPROPRIATE PERIMETER PROTECTION.
6. REMOVE AND REPLACE DETERIORATED OR CLOGGED SILT FENCE.
7. REPLACE SILT FENCE REMOVED FOR ACCESS AT THE END OF EACH DAY'S OPERATION.
8. INSTALL ADDITIONAL POSTS OR WIRE BACKING IF FENCE IS SAGGING.

WAKE COUNTY NORTH CAROLINA

EFFECTIVE: 01/31/08

STANDARD TEMPORARY SILT FENCE

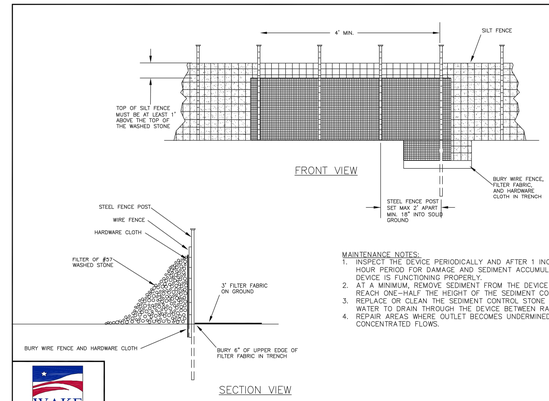

MAINTENANCE NOTES:
1. INSPECT THE DEVICE PERIODICALLY AND AFTER 1 INCH RAINFALL OVER 24 HOUR PERIOD FOR DAMAGE AND SEDIMENT ACCUMULATION TO CONFIRM THE DEVICE IS FUNCTIONING PROPERLY.
2. AT A MINIMUM, REMOVE SEDIMENT FROM THE DEVICE WHEN ACCUMULATIONS REACH ONE–HALF THE HEIGHT OF THE SEDIMENT CONTROL STONE.
3. REPLACE OR CLEAN THE SEDIMENT CONTROL STONE AS NEEDED TO ALLOW WATER TO DRAIN THROUGH THE DEVICE BETWEEN RAINFALL EVENTS.
4. REPAIR AREAS WHERE OUTLET BECOMES UNDERMINED DUE TO CONCENTRATED FLOWS.

WAKE COUNTY NORTH CAROLINA

EFFECTIVE: 01/31/08

STANDARD SILT FENCE OUTLET

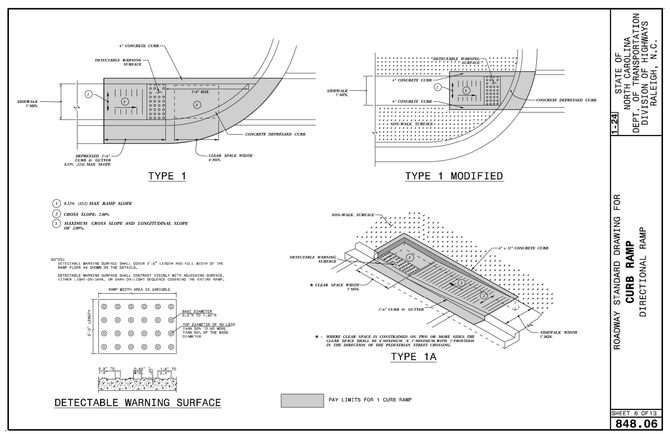

Know what's below. Call before you dig.

CONSTRUCTION DRAWINGS ISSUED FOR:
- ☐ PRELIMINARY
- ☐ MUNICIPAL REVIEW
- ☐ BID SET
- ■ CONSTRUCTION DOCUMENTS

CCE - CAPITAL CIVIL ENGINEERING -
209 N SALEM ST, STE 220, APEX, NC 27502
(919) 439-5857 FIRM LICENSE: P-0809
COPYRIGHT 2023 CAPITAL CIVIL ENGINEERING, PLLC P-0809

Revisions:
5/21/2025 – TOWN AND CLIENT COMMENTS

Scale:
Date: 5/21/2025
Drawn By: MPM

SMALL ENGINE REPAIR
ANGIER INDUSTRIAL PARK - LOT 8
189 PROGRESSIVE PARKWAY
ANGIER NC 27501
SITE DETAILS

Certified By:
NORTH CAROLINA PROFESSIONAL ENGINEER SEAL 036996 MICHAEL P. MOUNT
5/21/2025

Drawing Number:
C6

A/E Job Number:
142-001

BUILDING PLAN

FOR

SMALL ENGINE REPAIR ANGIER

189 PROGRESSIVE PARKWAY

ANGIER, NORTH CAROLINA

PREPARED FOR

SMALL ENGINE REPAIR ANGIER
189 PROGRESSIVE PARKWAY
ANGIER, NC 27501

ENGINEER

C. GREGORY BAGLEY
805 COKESBURY ROAD
FUQUAY VARINA, NC 27526
PHONE: (919) 609-300

SHEET INDEX

COVER
CODE
LIFE SAFETY
FLOOR PLAN
ELEVATIONS
FOUNDATION PLAN
PLUMBING PLAN
MECHANICAL PLAN
ELECTRICAL PLAN

PLANNING DESIGN
C. GREGORY BAGLEY
ENGINEER
MAPPING SURVEYING

2018 APPENDIX B
BUILDING CODE SUMMARY FOR ALL COMMERCIAL PROJECTS
(EXCEPT 1 AND 2-FAMILY DWELLINGS AND TOWNHOUSES)
(Reproduce the following data on the building plans sheet 1 or 2)

Name of Project: SMALL ENGINE REPAIR ANGIER
Address: 189 PROGRESSIVE PARKWAY Zip Code
Owner/Authorized Agent: GREG BAGLEY Phone # (919) 609 -0300 E-Mail GCB.GREG@GMAIL.COM
Owned By: Select one SMALL ENGINE REPAIR ANGIER
Code Enforcement Jurisdiction: Select one ANGIER, NC

CONTACT:

DESIGNER	FIRM	NAME	LICENSE #	TELEPHONE #	E-MAIL
Architectural				( )	
Civil	C. Gregory Bagley, Engineer	Greg Bagley	12276	(919) 609-0300	GCB.GREG@GMAIL.COM
Electrical	C. Gregory Bagley, Engineer	Greg Bagley	12276	(919) 609-0300	GCB.GREG@GMAIL.COM
Fire Alarm				( )	
Plumbing	C. Gregory Bagley, Engineer	Greg Bagley	12276	(919) 609-0300	GCB.GREG@GMAIL.COM
Mechanical	C. Gregory Bagley, Engineer	Greg Bagley	12276	(919) 609-0300	GCB.GREG@GMAIL.COM
Sprinkler-Standpipe				( )	
Structural				( )	
Retaining Walls >5' High				( )	
Other				( )	

("Other" should include firms and individuals such as truss, precast, pre-engineered, interior designers, etc.)

2018 NC BUILDING CODE: Select one NEW CONSTRUCTION

2018 NC EXISTING BUILDING CODE: Select one Select one Select one
CONSTRUCTED: (date) _____ CURRENT OCCUPANCY(S) (Ch. 3): VACANT
RENOVATED: (date) _____ PROPOSED OCCUPANCY(S) (Ch. 3): BUSINESS

RISK CATEGORY (Table 1604.5): Current: Select one Proposed: Select one

BASIC BUILDING DATA
Construction Type: Select one II B
Sprinklers: Select one NO Select one
Standpipes: Select one NONE
Primary Fire District: Select one NO **Flood Hazard Area: Select one** NO
Special Inspections Required: Select one N/A

Gross Building Area Table

FLOOR	EXISTING (SQ FT)	NEW (SQ FT)	SUB-TOTAL
3rd Floor			
2nd Floor			
Mezzanine			
1st Floor		6000	6000
Basement			
TOTAL			6000.

ALLOWABLE AREA

Primary Occupancy Classification(s): Select one Select one Select one Select one Select one Select one A-2
Accessory Occupancy Classification(s): _____
Incidental Uses (Table 509): _____
Special Uses (Chapter 4 – List Code Sections): _____
Special Provisions: (Chapter 5 – List Code Sections): _____
Mixed Occupancy: Select one Separation: Select one Exception: _____
Select one
Actual Area of Occupancy A / Allowable Area of Occupancy A + Actual Area of Occupancy B / Allowable Area of Occupancy B ≤ 1
_____ + _____ + …… = _____ ≤ 1.00

STORY NO.	DESCRIPTION AND USE	(A) BLDG AREA PER STORY (ACTUAL)	(B) TABLE 506.2.4 AREA	(C) AREA FOR FRONTAGE INCREASE1,5	(D) ALLOWABLE AREA PER STORY OR UNLIMITED2,3
1	BUSINESS	6000	23,000	N/A	23,000

1 Frontage area increases from Section 506.3 are computed thus:
a. Perimeter which fronts a public way or open space having 20 feet minimum width = N/A (F)
b. Total Building Perimeter = N/A (P)
c. Ratio (F/P) = N/A (F/P)
d. W = Minimum width of public way = N/A (W)
e. Percent of frontage increase If = 100[F/P – 0.25] x W/30 = N/A (%)
2 Unlimited area applicable under conditions of Section 507.
3 Maximum Building Area = total number of stories in the building x D (maximum 3 stories) (506.2).
4 The maximum area of open parking garages must comply with Table 406.5.4.
5 Frontage increase is based on the unsprinklered area value in Table 506.2.

ALLOWABLE HEIGHT

	ALLOWABLE	SHOWN ON PLANS	CODE REFERENCE 1
Building Height in Feet (Table 504.3) 2	55	15	
Building Height in Stories (Table 504.4) 3	3	1	

1 Provide code reference if the "Shown on Plans" quantity is not based on Table 504.3 or 504.4.
2 The maximum height of air traffic control towers must comply with Table 412.3.1.
3 The maximum height of open parking garages must comply with Table 406.5.4.

FIRE PROTECTION REQUIREMENTS

BUILDING ELEMENT	FIRE SEPARATION DISTANCE (FEET)	REQ'D	RATING PROVIDED (W/ _____ * REDUCTION)	DETAIL # AND SHEET #	DESIGN # FOR RATED ASSEMBLY	SHEET # FOR RATED PENETRATION	SHEET # FOR RATED JOINTS
Structural Frame, including columns, girders, trusses							
Bearing Walls							
Exterior							
North							
East							
West							
South							
Interior							
Nonbearing Walls and Partitions							
Exterior walls							
North							
East							
West							
South							
Interior walls and partitions							
Floor Construction Including supporting beams and joists							
Floor Ceiling Assembly							
Columns Supporting Floors							
Roof Construction, including supporting beams and joists							
Roof Ceiling Assembly							
Columns Supporting Roof							
Shaft Enclosures - Exit							
Shaft Enclosures - Other							
Corridor Separation							
Occupancy/Fire Barrier Separation							
Party/Fire Wall Separation							
Smoke Barrier Separation							
Smoke Partition							
Tenant/Dwelling Unit/ Sleeping Unit Separation							
Incidental Use Separation							

* Indicate section number permitting reduction

PERCENTAGE OF WALL OPENING CALCULATIONS

FIRE SEPARATION DISTANCE (FEET) FROM PROPERTY LINES	DEGREE OF OPENINGS PROTECTION (TABLE 705.8)	ALLOWABLE AREA (%)	ACTUAL SHOWN ON PLANS (%)
20'	UP, S	70%	70%

LIFE SAFETY SYSTEM REQUIREMENTS

Emergency Lighting: Select one NO
Exit Signs: Select one YES
Fire Alarm: Select one NO
Smoke Detection Systems: Select one YES
Carbon Monoxide Detection: Select one NO

LIFE SAFETY PLAN REQUIREMENTS

Life Safety Plan Sheet #: _____

- ☐ Fire and/or smoke rated wall locations (Chapter 7)
- ☒ Assumed and real property line locations (if not on the site plan)
- ☒ Exterior wall opening area with respect to distance to assumed property lines (705.8)
- ☒ Occupancy Use for each area as it relates to occupant load calculation (Table 1004.1.2)
- ☒ Occupant loads for each area
- ☒ Exit access travel distances (1017)
- ☒ Common path of travel distances (Tables 1006.2.1 & 1006.3.2(1))
- ☐ Dead end lengths (1020.4)
- ☒ Clear exit widths for each exit door
- ☒ Maximum calculated occupant load capacity each exit door can accommodate based on egress width (1005.3)
- ☒ Actual occupant load for each exit door
- ☐ A separate schematic plan indicating where fire rated floor/ceiling and/or roof structure is provided for purposes of occupancy separation
- ☐ Location of doors with panic hardware (1010.1.10)
- ☐ Location of doors with delayed egress locks and the amount of delay (1010.1.9.7)
- ☐ Location of doors with electromagnetic egress locks (1010.1.9.9)
- ☐ Location of doors equipped with hold-open devices
- ☐ Location of emergency escape windows (1030)
- ☒ The square footage of each fire area (202)
- ☒ The square footage of each smoke compartment for Occupancy Classification I-2 (407.5)
- ☒ Note any code exceptions or table notes that may have been utilized regarding the items above

ACCESSIBLE DWELLING UNITS
(SECTION 1107)

TOTAL UNITS	ACCESSIBLE UNITS REQUIRED	ACCESSIBLE UNITS PROVIDED	TYPE A UNITS REQUIRED	TYPE A UNITS PROVIDED	TYPE B UNITS REQUIRED	TYPE B UNITS PROVIDED	TOTAL ACCESSIBLE UNITS PROVIDED
1	1	1	1				1

ACCESSIBLE PARKING
(SECTION 1106)

LOT OR PARKING AREA	TOTAL # OF PARKING SPACES		# OF ACCESSIBLE SPACES PROVIDED			TOTAL # ACCESSIBLE PROVIDED
	REQUIRED	PROVIDED	REGULAR WITH 5' ACCESS AISLE	VAN SPACES WITH 132" ACCESS AISLE	VAN SPACES WITH 8' ACCESS AISLE	
	16	18				2
TOTAL	16	18				2

PLUMBING FIXTURE REQUIREMENTS
(TABLE 2902.1)

USE		WATERCLOSETS		URINALS	LAVATORIES		SHOWERS / TUBS	DRINKING FOUNTAINS	
		MALE	FEMALE	UNISEX	MALE	FEMALE	UNISEX		REGULAR ACCESSIBLE
SPACE	EXIST'G								
	NEW		1				1	1	
	REQ'D								

SPECIAL APPROVALS

Special approval: (Local Jurisdiction, Department of Insurance, OSC, DPI, DHHS, etc., describe below)

_____

ENERGY SUMMARY

ENERGY REQUIREMENTS:
The following data shall be considered minimum and any special attribute required to meet the energy code shall also be provided. Each Designer shall furnish the required portions of the project information for the plan data sheet. If performance method, state the annual energy cost for the standard reference design vs annual energy cost for the proposed design.

Existing building envelope complies with code: Select one

Exempt Building: Select one Provide code or statutory reference: _____

Climate Zone: 4

Method of Compliance: Select one
(If "Other" specify source here) PERSCRIPTIVE

THERMAL ENVELOPE (Prescriptive method only)

Roof/ceiling Assembly (each assembly)
Description of assembly: METAL ROOFING
U-Value of total assembly: .032
R-Value of insulation: CUMULATIVE R-30+
Skylights in each assembly: _____
U-Value of skylight: _____
total square footage of skylights in each assembly: _____

Exterior Walls (each assembly)
Description of assembly: METAL SIDING
U-Value of total assembly: .0625
R-Value of insulation: R-13+ R7.5
Openings (windows or doors with glazing)
U-Value of assembly: _____
Solar heat gain coefficient: _____
projection factor: _____
Door R-Values: _____

Walls below grade (each assembly)
Description of assembly: _____
U-Value of total assembly: _____
R-Value of insulation: _____

Floors over unconditioned space (each assembly)
Description of assembly: _____
U-Value of total assembly: _____
R-Value of insulation: _____

Floors slab on grade
Description of assembly: R-4 AS PER SECTION 502.2.4 TABLES 1,2,3
U-Value of total assembly: .25
R-Value of insulation: R- 4
Horizontal/vertical requirement: _____
slab heated: _____

2018 APPENDIX B
BUILDING CODE SUMMARY FOR ALL COMMERCIAL PROJECTS
STRUCTURAL DESIGN
(PROVIDE ON THE STRUCTURAL SHEETS IF APPLICABLE)

DESIGN LOADS:

Importance Factors: Snow (IS) Select one .87
Seismic (IE) Select one .8

Live Loads: Roof 20 psf
Mezzanine _____ psf
Floor 50 psf 100 PSF FOR COMMON PORCHES

Ground Snow Load: 15 psf

Wind Load: Ultimate Wind Speed 110 mph (ASCE-7)
Exposure Category Select one C

SEISMIC DESIGN CATEGORY: Select one
Provide the following Seismic Design Parameters: A
Risk Category (Table 1604.5) Select one I
Spectral Response Acceleration SS 2.7 **%g** S1 3.7 %g
Site Classification (ASCE 7) Select one E
Data Source: Select one PRESUMPTIVE
Basic structural system Select one BUILDING FRAME
Analysis Procedure: Select one SIMPLIFIED
Architectural, Mechanical, Components anchored? Select one

LATERAL DESIGN CONTROL: Select one

SOIL BEARING CAPACITIES:
Select one 2000 psf
Pile size, type, and capacity _____

2018 APPENDIX B
BUILDING CODE SUMMARY FOR ALL COMMERCIAL PROJECTS
MECHANICAL DESIGN
(PROVIDE ON THE MECHANICAL SHEETS IF APPLICABLE)

MECHANICAL SUMMARY

MECHANICAL SYSTEMS, SERVICE SYSTEMS AND EQUIPMENT

Thermal Zone
winter dry bulb: 20
summer dry bulb: 92

Interior design conditions
winter dry bulb: 20
summer dry bulb: 92
relative humidity: 70

Building heating load: 42050

Building cooling load: 51325

Mechanical Spacing Conditioning System
Unitary
description of unit: (2) SPLIT SYSTEMS
heating efficiency: 14 SEERS
cooling efficiency: 42
size category of unit: 58000
Boiler
Size category. If oversized, state reason.: N/A
Chiller
Size category. If oversized, state reason.: N/A

List equipment efficiencies: 44 %

2018 APPENDIX B
BUILDING CODE SUMMARY FOR ALL COMMERCIAL PROJECTS
ELECTRICAL DESIGN
(PROVIDE ON THE ELECTRICAL SHEETS IF APPLICABLE)

ELECTRICAL SUMMARY

ELECTRICAL SYSTEM AND EQUIPMENT

Method of Compliance: Select one PERSCRIPTIVE

Lighting schedule (each fixture type) PER DRAWINGS
lamp type required in fixture
number of lamps in fixture
ballast type used in the fixture
number of ballasts in fixture
total wattage per fixture
total interior wattage specified vs. allowed (whole building or space by space)
total exterior wattage specified vs. allowed

Additional Efficiency Package Options
(When using the 2018 NCECC; not required for ASHRAE 90.1)
- ☐ C406.2 More Efficient HVAC Equipment Performance
- ☐ C406.3 Reduced Lighting Power Density
- ☐ C406.4 Enhanced Digital Lighting Controls
- ☐ C406.5 On-Site Renewable Energy
- ☐ C406.6 Dedicated Outdoor Air System
- ☐ C406.7 Reduced Energy Use in Service Water Heating

Project #:
Date:
Drawn/Design By:
Scale:

REVISIONS

No.	Date:	Remarks
1		
2		
3		
4		

NORTH CAROLINA PROFESSIONAL ENGINEER SEAL 12276 C. GREGORY BAGLEY 4-15-2025

C. Gregory Bagley, Engineer
805 Cokesbury Road
Fuquay Varina, N.C. 27526
Office: (919)552-1600
Fax: (919) 552-6325

DESIGN SURVEYING MAPPING C. GREGORY BAGLEY ENGINEER

CODE SHEET

FACILITIES
FOR
SMALL ENGINE REPAIR ANGIER
189 PROGRESSIVE PARKWAY
ANGIER, NC 27501

Sheet Number
CODE
of 1

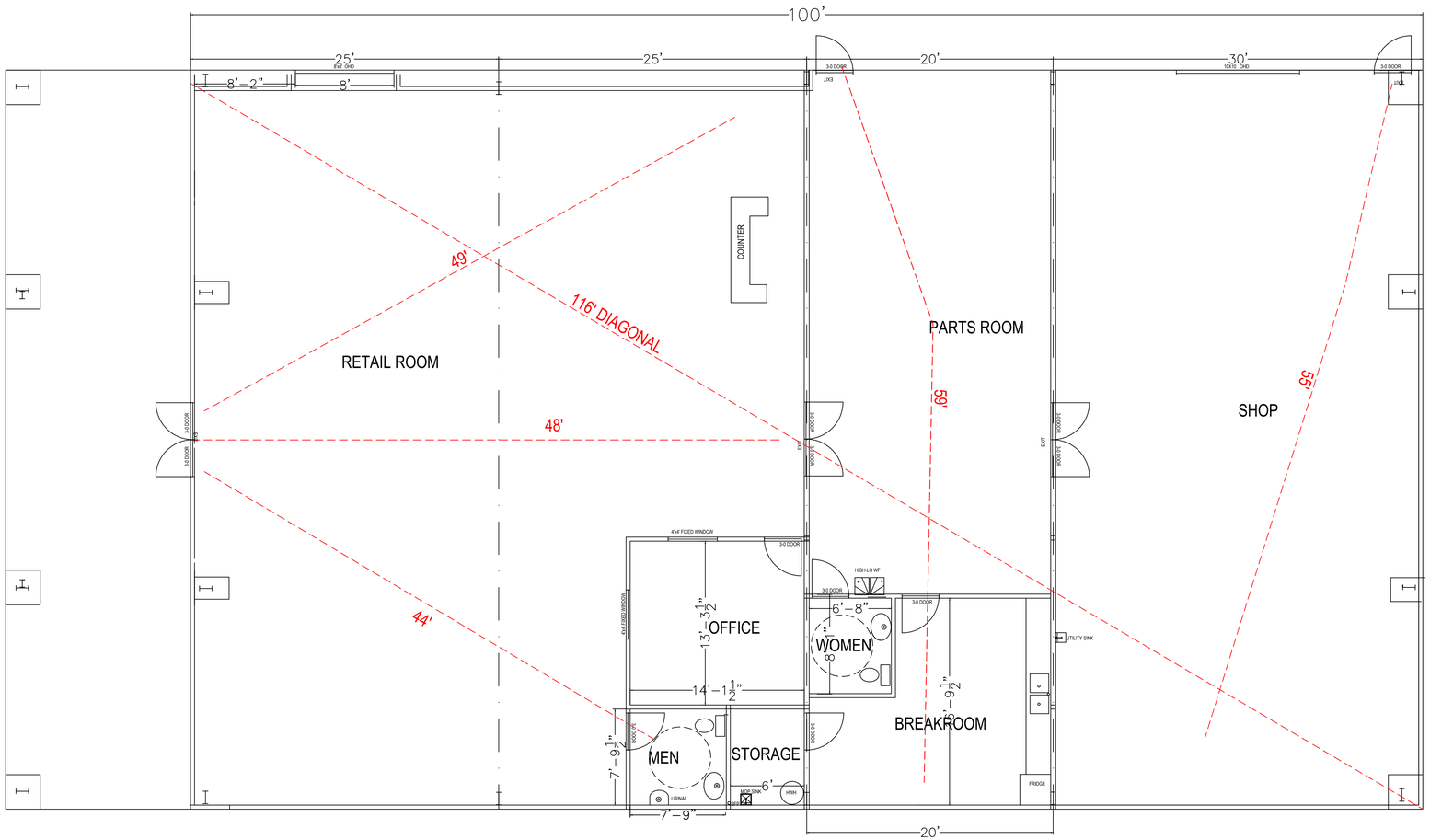

DIAGONAL IS 119'
DISTANCE BETWEEN EXIT MAX
=59.5' OR $\frac{1}{2}$ DIAGONAL
4 EXIT DOOR AT 35"/.32
= 437 OCCUPANTS CAN
BE EVACUATED.

LIFE SAFETY

$\frac{3}{16}$"= 1'-0"

OCCUPANT LOAD

LOCATION	TYPE	AREA	REQ. SQ FT	OCCUPANCY
RETAIL AREA	BUSINESS	2660 SQ FT	100 SQ FT	27
PARTS AREA	BUSINESS	828 SQ FT	100 SQ FT	8
SHOP AREA	BUSINESS	1758 SQ FT	100 SQ FT	18
STORAGE (EMPLOYEE)	BUSINESS	48 SQ FT	100 SQ FT	1
	TOTAL	5294 SQ FT		54

DOOR SCHEDULE

TYPE	LOCATION	KEYED/Y/N	RH/LH	DESCRIPTION	SIZE
LEVER	INTERIOR	3 Y/12 N	3/12	SOLID CORE HMF	36"
LOCK	INTERIOR BATH	3 Y/12 N		SOLID CORE HMF	36"
PANIC	EXTERIOR	2 Y		STORE FRNT	72"

LIFE SAFETY PLAN REQUIREMENTS

Life Safety Plan Sheet #: _____

- ☐ Fire and/or smoke rated wall locations (Chapter 7)
- ☒ Assumed and real property line locations (if not on the site plan)
- ☒ Exterior wall opening area with respect to distance to assumed property lines (70
- ☒ Occupancy Use for each area as it relates to occupant load calculation (Table 10
- ☒ Occupant loads for each area
- ☒ Exit access travel distances (1017)
- ☒ Common path of travel distances (Tables 1006.2.1 & 1006.3.2(1))
- ☐ Dead end lengths (1020.4)
- ☒ Clear exit widths for each exit door
- ☒ Maximum calculated occupant load capacity each exit door can accommodate b
- ☒ Actual occupant load for each exit door
- ☐ A separate schematic plan indicating where fire rated floor/ceiling and/or roof str purposes of occupancy separation
- ☐ Location of doors with panic hardware (1010.1.10)
- ☐ Location of doors with delayed egress locks and the amount of delay (1010.1.9.7
- ☐ Location of doors with electromagnetic egress locks (1010.1.9.9)
- ☐ Location of doors equipped with hold-open devices
- ☐ Location of emergency escape windows (1030)
- ☒ The square footage of each fire area (202)
- ☒ The square footage of each smoke compartment for Occupancy Classification I-
- ☒ Note any code exceptions or table notes that may have been utilized regarding t

Project #:

Date:

Drawn/Design By:

Scale:

REVISIONS

No.	Date:	Remarks
1		
2		
3		
4		

C. Gregory Bagley, Engineer
805 Cokesbury Road
Fuquay Varina, N.C. 27526
Office: (919)552-1600
Fax: (919) 552-6325

LIFE SAFETY

FACILITIES FOR SMALL ENGINE REPAIR ANGIER
189 PROGRESSIVE PARKWAY
ANGIER, NC 27501

Sheet Number

LIFE SAFETY

of 1

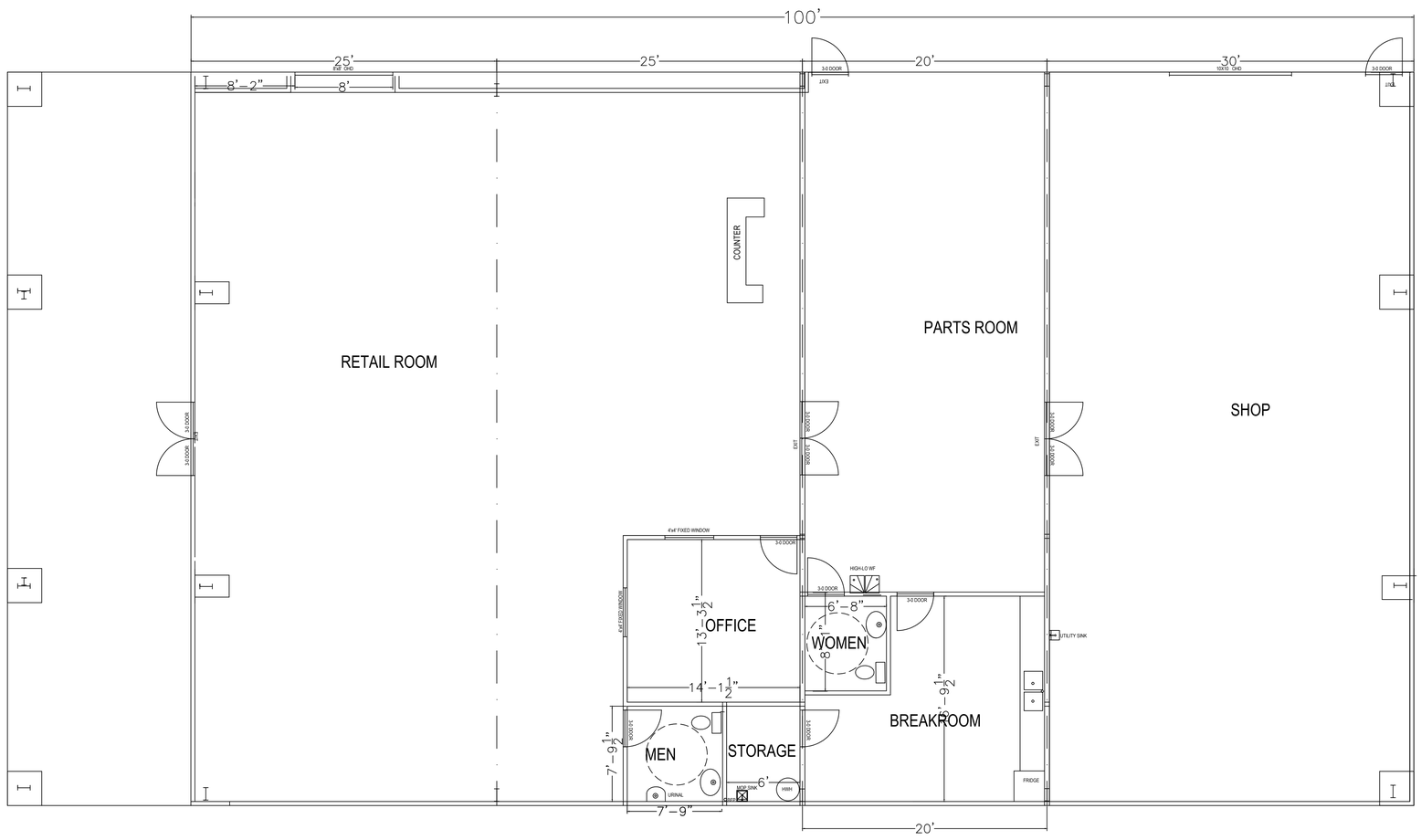

OCCUPANT LOAD

LOCATION	TYPE	AREA	REQ. SQ FT	OCCUPANCY
RETAIL AREA	BUSINESS	2660 SQ FT	100 SQ FT	27
PARTS AREA	BUSINESS	828 SQ FT	100 SQ FT	8
SHOP AREA	BUSINESS	1758 SQ FT	100 SQ FT	18
STORAGE (EMPLOYEE)	BUSINESS	48 SQ FT	100 SQ FT	1
	TOTAL	5294 SQ FT		54

DOOR SCHEDULE

TYPE	LOCATION	KEYED/Y/N	RH/LH	DESCRIPTION	SIZE
LEVER	INTERIOR	3 Y/12 N	3/12	SOLID CORE HMF	36"
LOCK	INTERIOR BATH	3 Y/12 N		SOLID CORE HMF	36"
LOCK	EXTERIOR	2 Y		STORE FRNT	72"

FLOOR PLAN
1/4" = 1'-0"

Project #:
Date:
Drawn/Design By:
Scale:

REVISIONS

No.	Date:	Remarks
1		
2		
3		
4		

NORTH CAROLINA PROFESSIONAL ENGINEER SEAL 12276 C. GREGORY BAGLEY 4-15-2025

C. Gregory Bagley, Engineer
805 Cokesbury Road
Fuquay Varina, N.C. 27526
Office: (919)552-1600
Fax: (919) 552-6325

C. GREGORY BAGLEY ENGINEER
DESIGN SURVEYING PLANNING MAPPING

FLOOR PLAN

FACILITIES FOR SMALL ENGINE REPAIR ANGIER
189 PROGRESSIVE PARKWAY
ANGIER, NC 27501

Sheet Number
FP 1
of 1

BRICK = BROWNSTONE TRIANGLE MID
ROOFING = GALVALUME STANDING SEAM
PARAPET WALL= STANDING SEAM BEIGE

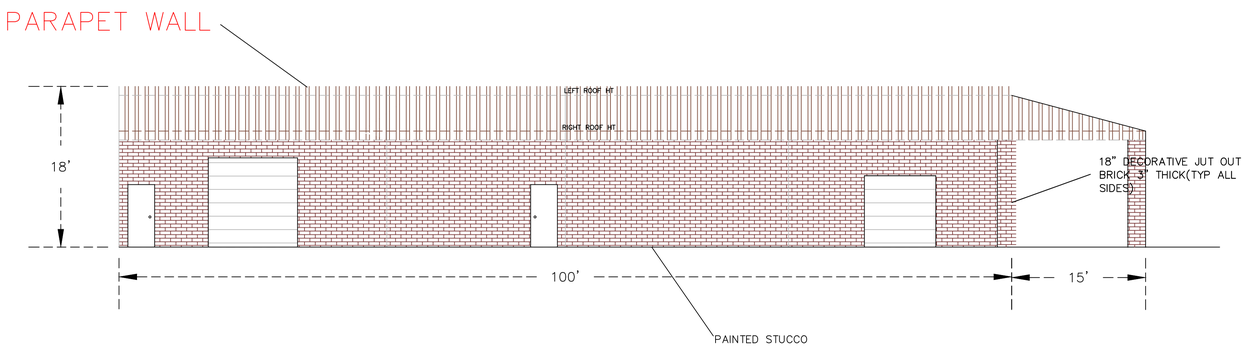

LEFT SIDE

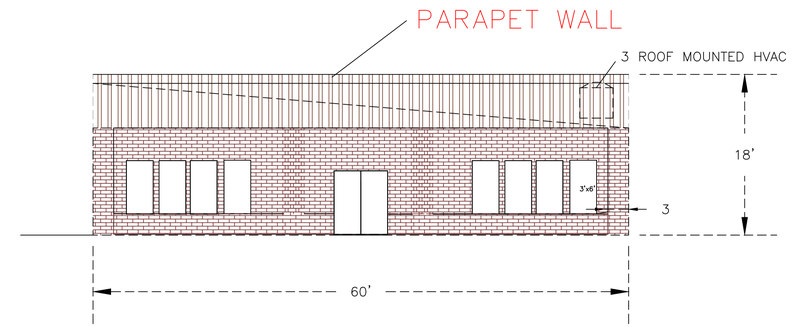

FRONT

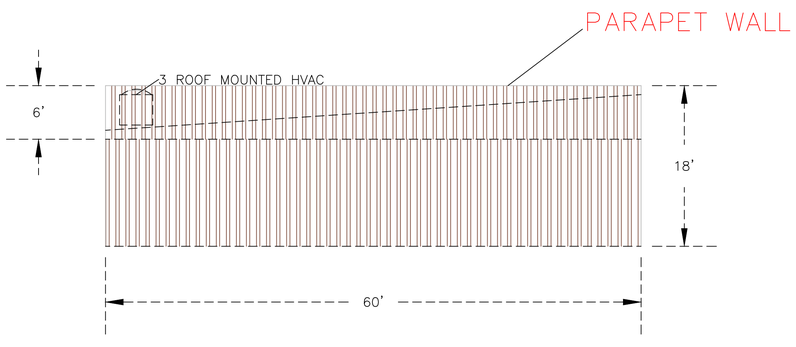

REAR

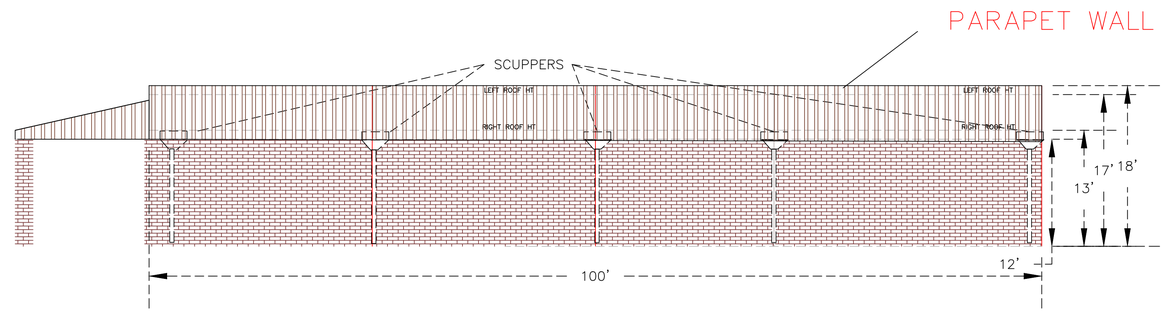

RIGHT SIDE

ELEVATIONS
1/8" = 1'-0"

Project #:
Date:
Drawn/Design By:
Scale:

REVISIONS

No.	Date:	Remarks
1		
2		
3		
4		

C. Gregory Bagley, Engineer
805 Cokesbury Road
Fuquay Varina, N.C. 27526
Office: (919)552-1600
Fax: (919) 552-6325

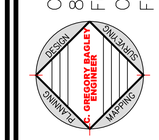

ELEVATIONS

FACILITIES
FOR
SMALL ENGINE REPAIR ANGIER
189 PROGRESSIVE PARKWAY
ANGIER, NC 27501

Sheet Number
ELEV 1
of 1

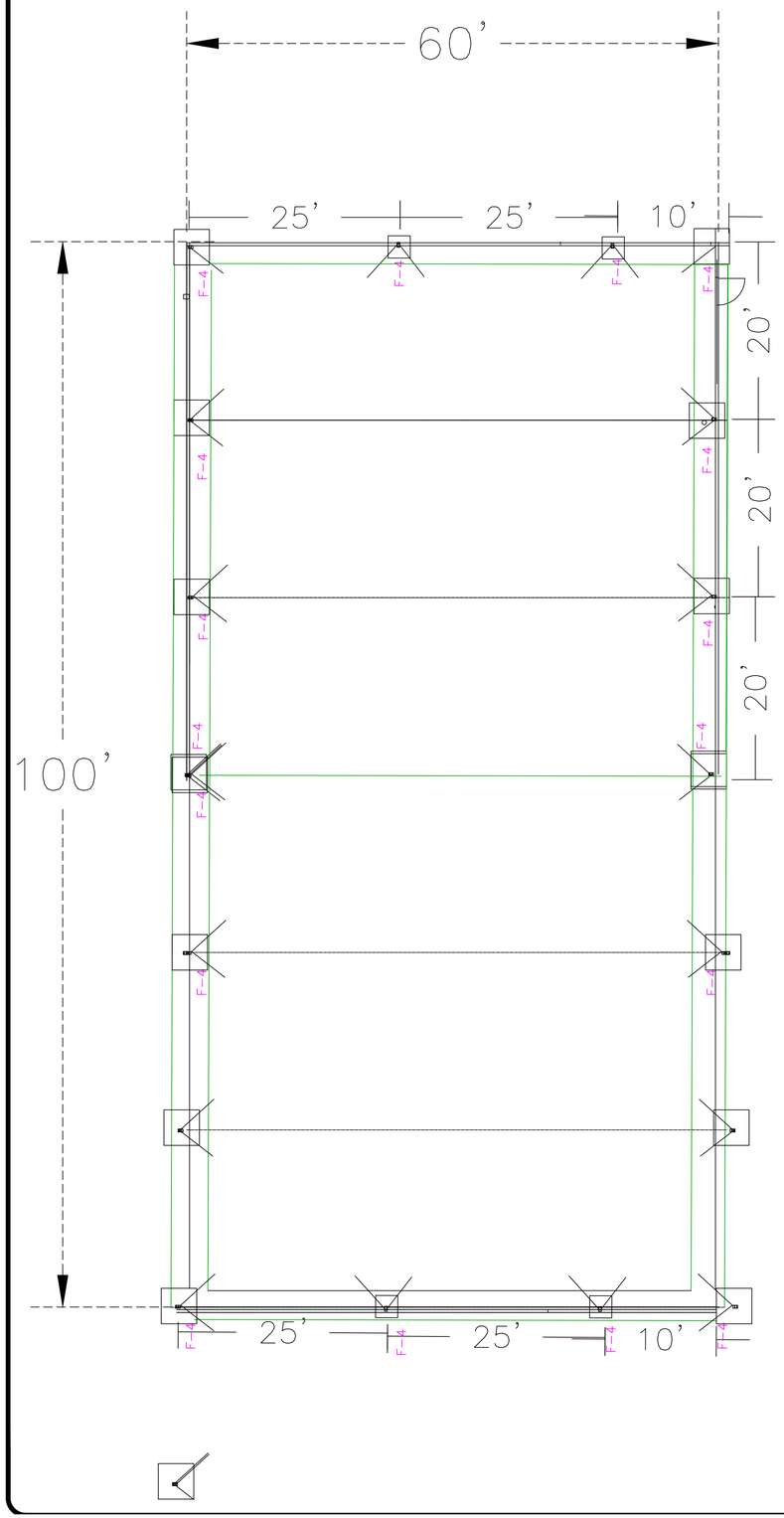

GENERAL NOTES

1. REQUIRED CODE JURISDICTION
   NORTH CAROLINA BUILING CODE, 2018 EDITION
   ACI BUILDING CODE REQUIREMENT CONCRETE STRUCTURES (ACI 318-99)
   ASCE 7-98 MINIMUM DESIGN LOADS FOR BUILDINGS AND OTHER STRUCTURES.
2. ENGINEER'S SEAL APPLIES TO STRUCTURAL COMPONENTS ONLY.
3. REACTIONS PROVIDED BY DESIGN BUILD COMPANY .
4. SEE BUILDINGS DRAWINGS FOR COLUMN AND BASE PLATE SIZES.
5. ANCHOR BOLT DESIGN PROVIDED BY BUILDING DESIGNER.
6. UNLESS OTHERWISE NOTED, ALL CONCRETE SHALL HAVE THE FOLLOWING STRENGTH STRENGTH AND SLUMP REQUIREMENTS: 3000 PSI 28 DAY 6" SLUMP
7. REINFORCING STEEL SHALL BE PER ASTM A-615 GRADE 60

FOUNDATION REACTION SCHEDULE

PER METAL BUILDING MANUFACTURER

FOOTING SCHEDULE

SYMBOL	SIZE	DEPTH	STEEL REINF.
F-4	4'x4'	20"	5 No. 5 E.W. BTM.

ANCHOR BOLT SCHEDULE

SYMBOL	SIZE
A-2	3/4" x 18"

FOUNDATION
1/8" = 1'-0"

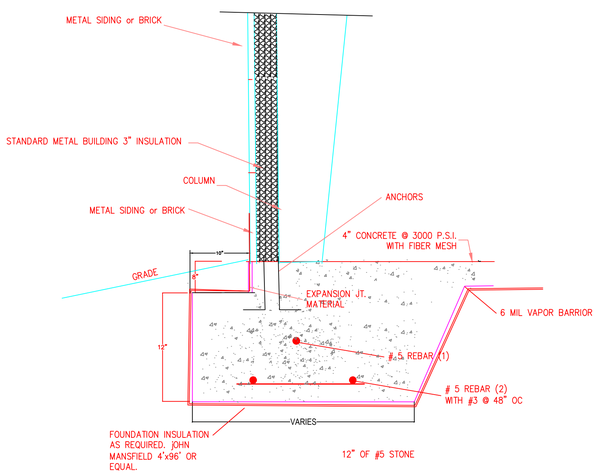

PIER FOOTING DETAIL

NTS

Project #:

Date:

Drawn/Design By:

Scale:

REVISIONS

No.	Date:	Remarks
1		
2		
3		
4		

NORTH CAROLINA PROFESSIONAL SEAL C. GREGORY BAGLEY 4-15-2025

C. Gregory Bagley, Engineer
805 Cokesbury Road
Fuquay Varina, N.C. 27526
Office: (919)552-1600
Fax: (919) 552-6325

DESIGN SURVEYING PLANNING MAPPING C. GREGORY BAGLEY ENGINEER

FOUNDATION

FACILITIES
FOR
SMALL ENGINE REPAIR ANGIER
189 PROGRESSIVE PARKWAY
ANGIER, NC 27501

Sheet Number

FND 1

of 1

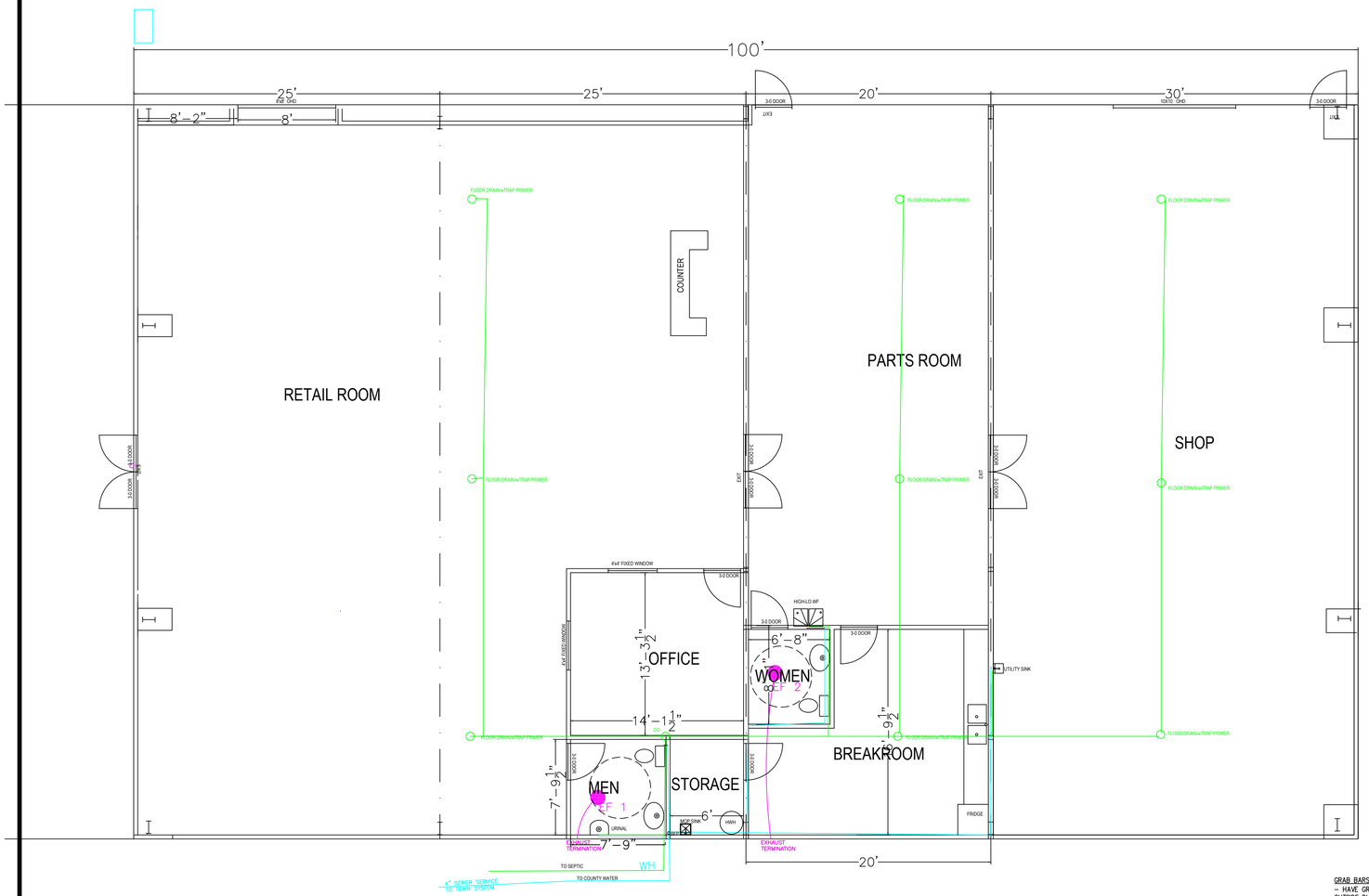

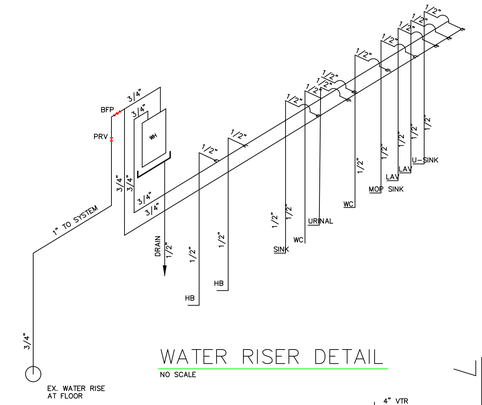

WATER RISER DETAIL

NO SCALE

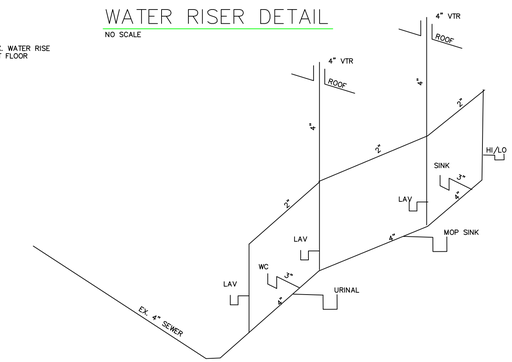

SEWER RISER DETAIL

NO SCALE

GRAB BARS SHALL:
- HAVE GRIPPING SURFACE OF 1 1/4" - 1 1/2" IN WIDTH OR OUTSIDE DIAMETER
- 1 1/2" HAND CLEARANCE BETWEEN THE FACE OF THE BAR & THE FINISHED SURFACE OF THE WALL/ PARTITION
- BE CAPABLE OF SUPPORTING A 250 LB. LOAD APPLIED IN ANY DIRECTION ANYWHERE ALONG ITS LENGTH
- NOT ROTATE W/ IN THEIR FITTINGS
- BE FREE OF ANY SHARP/ ABRASIVE ELEMENTS
- EDGES SHALL HAVE A 1/8" MIN. RADIUS

ADA DETAILS

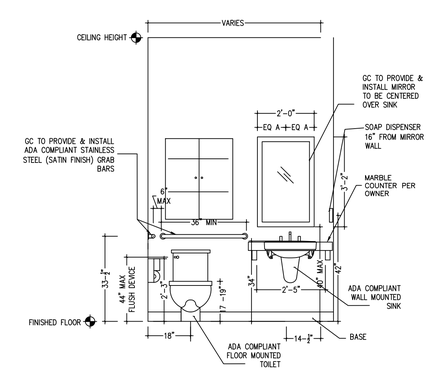

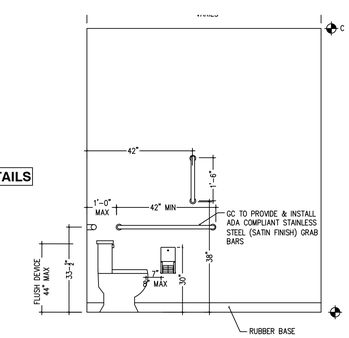

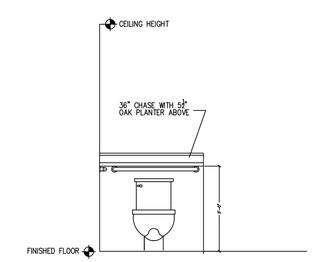

PLUMBING NOTES

1. ALL VENTS SHALL SIZED AS SHOWN.
2. BACKFLOW PREVENTER SHALL BE LOCATED IN STORAGE ROOM NEXT TO HOT WATER HEATERS.
3. AIRFLOW CHAMBERS ARE NOT REQUIRED.

PLUMBING
1/8" = 1'-0"

Project #:
Date:
Drawn/Design By:
Scale:

REVISIONS

No.	Date:	Remarks
1		
2		
3		
4		

C. Gregory Bagley, Engineer
805 Cokesbury Road
Fuquay Varina, N.C. 27526
Office: (919)552-1600
Fax: (919) 552-6325

PLUMBING

FACILITIES
FOR
SMALL ENGINE REPAIR ANGIER
189 PROGRESSIVE PARKWAY
ANGIER, NC 27501

Sheet Number
PLUMB 1
of 1

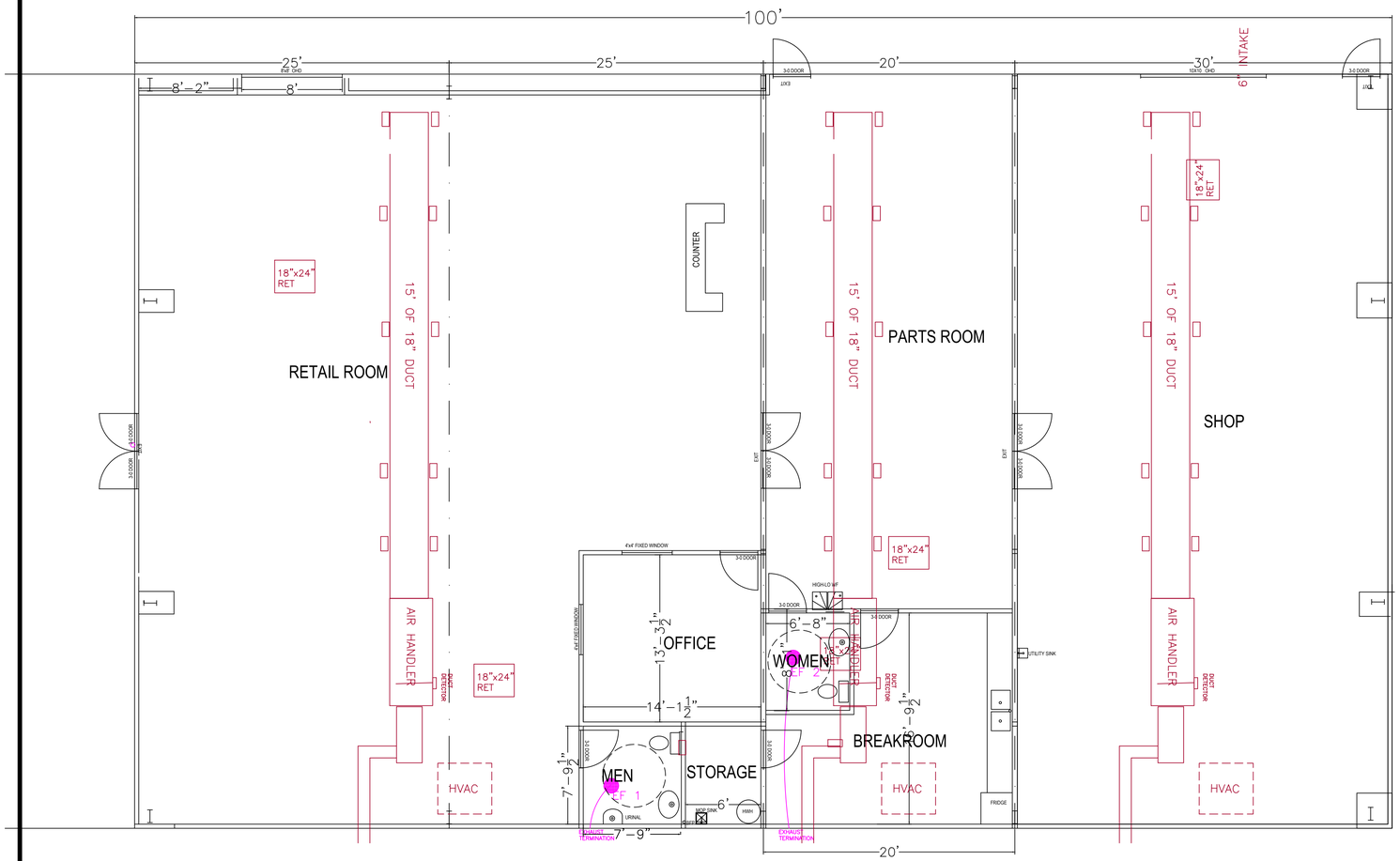

MECHANICAL
3/16" = 1'-0"

HVAC

MECHANICAL SYSTEMS, SERVICE SYSTEMS, AND EQUIPMENT

METHOD OF COMPLIANCE	PRESCRIPTIVE
THERMAL ZONE	IV
EXTERIOR DESIGN CONDITIONS	
winter dry bulb	16 F
summer dry bulb	92 F
INTERIOR DESIGN CONDITIONS	
winter dry bulb	70 F
summer dry bulb	74 F
relative humidity	50 %
BUILDING HEATING LOAD	75000/150000 BTU
BUILDING COOLING LOAD	123000 BTU
MECHANICAL SPACE CONDITIONING SYSTEMS	
Unitary	
description of unit	DX COOLING/HEAT
heating efficiency	12.2 IEER
cooling efficiency	12.2 IEER
heating output of units	60750 BTU
cooling output of units	119,000 BTU
LIST EQUIPMENT EFFICIENCIES	SEE SCHEDULE
EQUIPMENT SCHEDULES WITH MOTORS	SEE SCHEDULE

OUTSIDE AIR CALCULATION

		CFM/PERSON	TOTAL CFM
50	CLIENTS	5	250

USE 8" FLEX FOR OUTSIDE DUCT TO EACH UNIT

TOTAL CFM PRODUCED = 7200
(30) 8" VENTS
30 VENTS @ 220 CFM / VENT
= 6600 CFM OUTPUT
STATIC PRESSURE = 0.1in-wg

HVAC EQUIPMENT NOTES

USE 3-5 TON 14 SEER UNITS HEAT PUMPS.
UNIT TO BE ON CONC SLAB OUTSIDE BUILDING.
3/4" CONDENSATE LINE WITH P-TRAP ROUTED TO OUTSIDE AND FASTENED TO WALL.
OUTSIDE AIR INTAKE TO BE ROUTED UP WALL FRAMING AND TERMINATED ABOVE ROOF.
INTAKE MUST BE A MINIMUM OF 10' FROM OUTLET OR EXHAUST.
MOUNT PROGRAMMABLE THERMOSTAT ON WALL 48" AFF. AS PER ADA REQUIREMENTS
BATHROOM FANS TO BE 125 CFM WITH 4" DUCT.
DISCHARGE EXHAUST OUTSIDE OF BUILDING.
USE 8" FLEX FOR OUTSIDE AIR INTAKE DUCT

GENERAL HVAC NOTES

PROVIDE ELECTRIC HEAT PUMP - SEE BELOW
MIN REQUIREMENTS TO BE MET AS NOTED ABOVE MET FROM NOTES ABOVE
LOCATE PROGRAMMABLE THERMOSTATS AS NEEDED FOR PROPER EFFECT
FANS SHALL RUN CONTINUOUSLY DURING OCCUPANCY TO PROVIDE OUTIDE AIR.
DUCT DETECTORS REQUIRED ON ALL UNITS
REMOTE ALARM INDICATOR DEVICES (RAIDS) REQUIRED FOR EACH UNIT AND TO BE INSTALLED NEAR UNIT NO MORE THAN 72" AFF
DUCT SMOKE DETECTORS TO OPERATE GLOBALLY, ie WHEN ONE DETECTOR ACTIVATES, ALL AIR HANDLING UNITS SHUT DOWN.

HVAC EQUIPMENT SCHEDULE

HVAC
2-5 TON UNITS ON GROUND
RUUD UNITS # RKKL-B120CL15E
GAS HEAT PACKAGE UNITS

SMOKE DETECTORS
USE D 41-20 INDOIRE SYSTEM
SMOKE DETECTORS EACH UNIT

ECONOMIZER
USE AXR-RDCN13 ECONOMISERS
ON EACH UNIT PER CODE

CALCULATE HEAT PUMP

Total Power Input = 88,610 + 1,650
= 10,511 Watts

GAS PIPING TABLE

CHAPTER 4 OF NC FUEL GAS CODE TABLE 4.02.4(3)

MECHANICAL SCHEDULE

HEAT PUMP AND AIR HANDLER					
TYPE	RATING	TON	MODEL NO	MCA	MOCP
CARRIER HP	14 SEER	3-5	25HBRxxxxxxxx	27.6	40 AMPS
CARRIER AHU		10 KW	FC4DNFxxxxx	57.5	60 AMPS

LIGHTING SCHEDULE

TYPE	LOCATION	MANUF	MODEL NO	QUANTITY
LED	GYM	LITHONIA	LE 2174X	10
LED	OFFICE	LITHONIA	DLE 135X	1/150 SQ FT

THERE SHALL BE NO HAZARDOUS MATERIAL PER NEC 500
STORED, USED ,HANDLED OR MFG. IN THIS FACILITY.

Project #:
Date:
Drawn/Design By:
Scale:

REVISIONS

No.	Date:	Remarks
1		
2		
3		
4		

NORTH CAROLINA PROFESSIONAL ENGINEER SEAL C. GREGORY BAGLEY 4-15-2025

C. Gregory Bagley, Engineer
805 Cokesbury Road
Fuquay Varina, N.C. 27526
Office: (919)552-1600
Fax: (919) 552-6325

DESIGN · SURVEYING · PLANNING · MAPPING · C. GREGORY BAGLEY ENGINEER

MECHANICAL

FACILITIES FOR SMALL ENGINE REPAIR ANGIER
189 PROGRESSIVE PARKWAY
ANGIER, NC 27501

Sheet Number
MECH 1
of 1

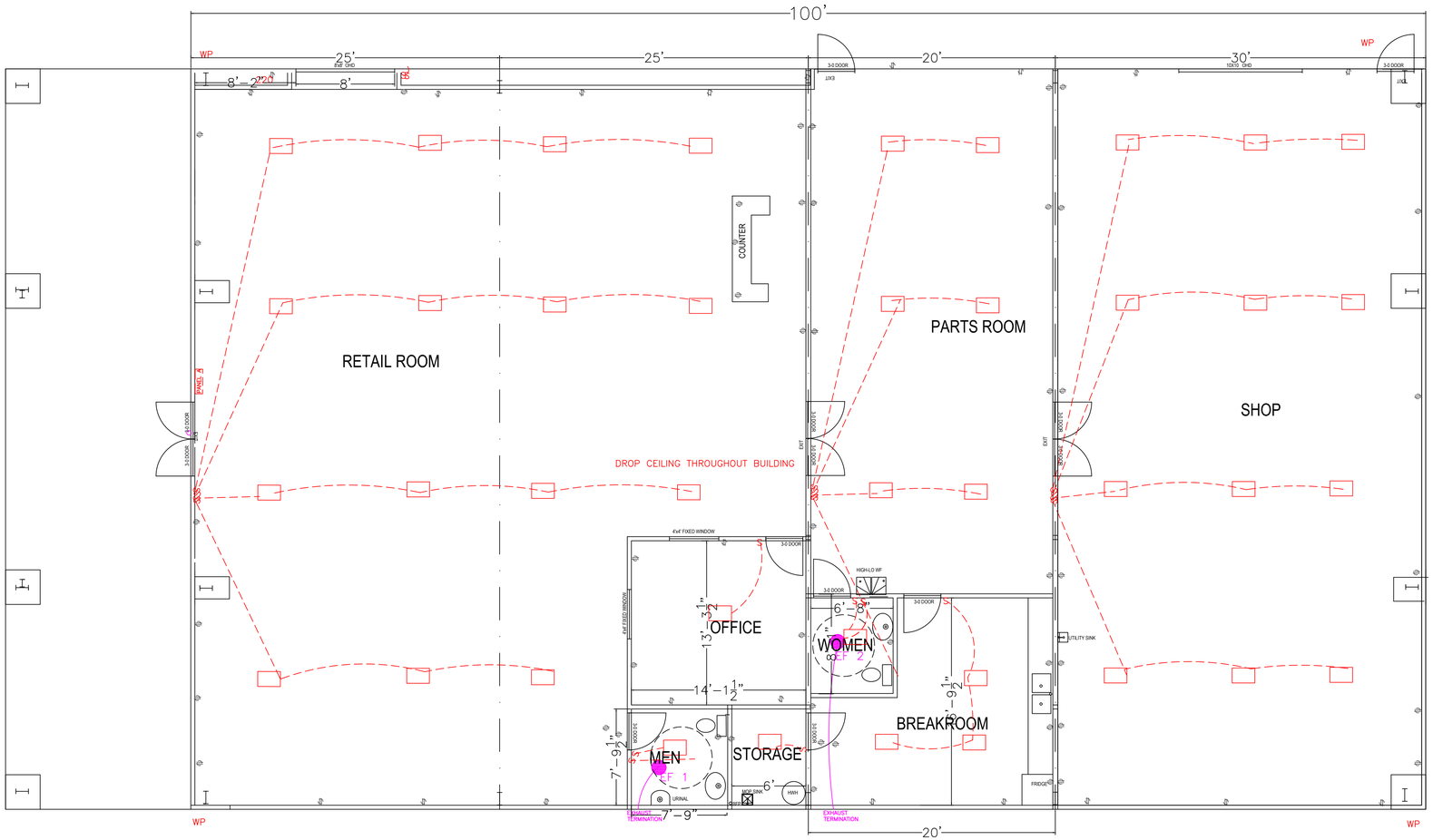

ELECTRICAL

200 AMP SERVICE
VOLTAGE 208/120V 1 PHASE : 4 WIRE

DEVICE SIZE	DEVICE AMPS TRIP	DEVICE POLES	BRANCH CIRCUIT DESCRIPTION	CKT	PH A	PH B	PH C	PH A	PH B	PH C	CKT	BRANCH CIRCUIT DESCRIPTION	DEVICE POLES	DEVICE AMPS TRIP	DEVICE SIZE
12	20	1	RECEPT	1				10			2	RECPT.	1	20	12
10	20	1	RECEPT	3	37				10		4	RECPT.	1	20	12
10	20	1	LIGHTING	5		32				10	6	RECPT. BATH GFI	1	20	12
12	40	1	RECPT. 220	7	7				11		8	RECPT. 220	1	40	12
12	20	1	LIGHTING BATH	9		7				11	10	BATH FAN	1	40	10
12	20	1	EXIT	11	7			11			12	WATER HTR.	1	40	10
12	20	1	DRYER	13		7		7			14	WASHER	1	20	12
12	20	1	SIGN	15							16	LIGHTING WALL PK	1	20	12
10	60	1		17							18		2	30	10
10	60	1		19							20		2	30	10
			TOTAL		51	48	0	28	21	21					

TOTAL CONNECTED AMPS A –79 B–69 C– 21

NO NM CABLE ABOVE CEILING– CONDUIT ONLY
PANEL AND METER MOUNTED BACK TO BACK

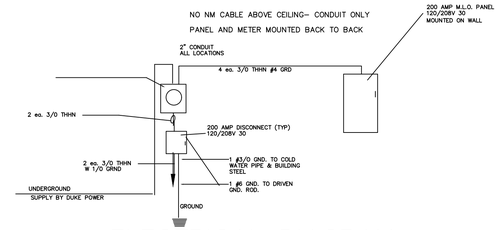

ELECTRICAL DIAGRAM

NOT TO SCALE

LOAD CALCS.

LOAD	CONN (KVA)	DEMAND FACTOR	DEMAND LOAD
LIGHTING	5	125% ****	6.25
RECEPT.	8.4	1ST 10 KV – 100% REM –50%	8.4
HVAC	42.5	100%	42.5
SIGN	1.2	125% ****	1.5
WH	30	125%	37.5
TOTAL	87.1	TOTAL	96.5

METER

LIGHTING LOAD CALCS.

AREA TYPE	MIN WATTS	SQ FT	REQUIRED	PROVIDED
BATH	3.5	64	224	240
STORAGE	1.5	1936	2904	3000

OCCUPANCY SENSORS AT ALL LOCATIONS
RECEPTACLES SHOWN ON PLAN ABOVE.

LIGHTING SCHEDULE

TYPE	LOCATION	MANUF	MODEL NO	COVERAGE	QUANTITY
LED	GYM	LITHONIA	LE 2174X	1/200 sq ft	20
LED	OFFICE	LITHONIA	DLE 135X	1/150 sq ft	7
LED	OFFICE	LITHONIA	DLE 135X	1/150 sq ft	2

ARE , AHU, AI TO BE SINGLE PHASE

ELECTRICAL DETAILS AND NOTES FOR HEALTHCARE FACILITY

ELECTRICAL
3/16" = 1'-0"

Project #:
Date:
Drawn/Design By:
Scale:

REVISIONS

No.	Date:	Remarks
1		
2		
3		
4		

C. Gregory Bagley, Engineer
805 Cokesbury Road
Fuquay Varina, N.C. 27526
Office: (919)552–1600
Fax: (919) 552–6325

ELECTRICAL

FACILITIES FOR
SMALL ENGINE REPAIR ANGIER
189 PROGRESSIVE PARKWAY
ANGIER, NC 27501

Sheet Number
ELEC 1
of 1