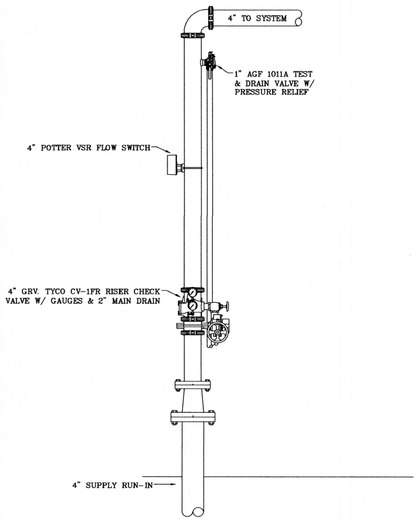


EXISTING RISER DETAIL
N.T.S.

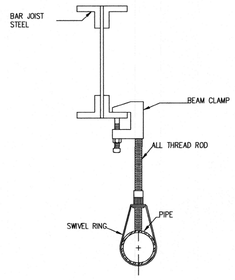


BEAM CLAMP HANGER DETAIL
N.T.S.

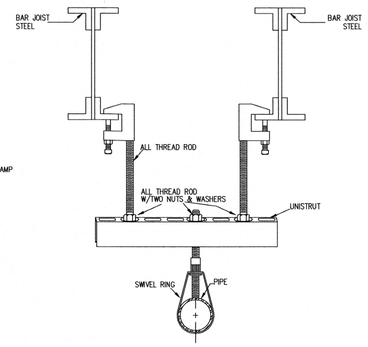


UNISTRUT HANGER DETAIL
N.T.S.

## HANGER INSTALLATION REQUIREMENTS

| | MAXIMUM DISTANCE BETWEEN HANGERS | | | | | | | | | | | |
|---|---|---|---|---|---|---|---|---|---|---|---|---|
| NOMINAL PIPE SIZE | ¾" | 1" | 1¼" | 1½" | 2" | 2½" | 3" | 3½" | 4" | 5" | 6" | 8" |
| BLAZEMASTER CPVC | 5' 6" | 6' 0" | 6' 6" | 7' 0" | 8' 0" | 9' 0" | 10' 0" | N/A | N/A | N/A | N/A | N/A |
| THREADABLE LIGHTWALL | N/A | 12' 0" | 12' 0" | 12' 0" | 12' 0" | 12' 0" | 12' 0" | N/A | N/A | N/A | N/A | N/A |
| STEEL PIPE (10/ 40) | N/A | 12' 0" | 12' 0" | 15' 0" | 15' 0" | 15' 0" | 15' 0" | 15' 0" | 15' 0" | 15' 0" | 15' 0" | 15' 0" |

100 PSI STATIC PRESSURE ON SYSTEM REQUIRES UP-LIFT RESTRAINT WITHIN 12 INCHES HORIZONTALLY OF HEAD FOR ARM-OVERS AND END OF BRANCH LINE

THE UNSUPPORTED LENGTH BETWEEN THE END SPRINKLER AND THE LAST HANGER ON THE LINE SHALL NOT EXCEED 36" FOR 1" PIPE, 48" FOR 1¼" PIPE AND 60" FOR 1½" PIPE OR LARGER

THE CUMULATIVE HORIZONTAL LENGTH OF AN UNSUPPORTED ARMOVER TO A SPRINKLER, SPRINKLER DROP, OR SPRIG-UP SHALL NOT EXCEED 24"

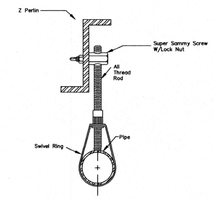


Z PERLIN HANGER DETAIL
N.T.S.

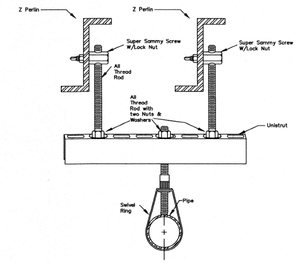


UNISTRUT Z PERLIN DETAIL
N.T.S.

## LEGEND

- EXISTING FIRE PROTECTION PIPING
- NEW FIRE PROTECTION PIPING
- DENOTES NEW PENDENT SPRINKLER
- DENOTES RISE IN PIPE
- DENOTES EXISTING UPRIGHT SPRINKLER TO REMAIN
- DENOTES UPRIGHT SPRINKLER
- DENOTES EXISTING RISER
- DENOTES NEW PENDENT SPRINKLER W/ DEEP ESCU
- DENOTES NEW 1 1/2"X 1" THRD MECH TEE

## GENERAL NOTES

1. ALL WORK SHALL BE IN FULL COMPLIANCE WITH NFPA 13, 2013 Ed., AND THE NORTH CAROLINA STATE BUILDING CODE.
2. ALL LABOR AND MATERIALS REQUIRED SHALL BE FOR ONE COMPLETE WORKING SYSTEM WHICH MEETS ALL REQUIREMENTS OF NFPA 13 2013 Ed., AND THE NORTH CAROLINA STATE BUILDING CODE.
3. ALL MATERIALS AND EQUIPMENT SHALL BE NEW, UL LISTED APPROVED FOR THE INTENDED USE AND SHALL BE INSTALLED IN FULL COMPLIANCE WITH MANUFACTURER'S RECOMMENDATIONS.
4. SPRINKLER HEADS ARE SPACED PER LIGHT HAZARD SPRINKLER SPACING NOT TO EXCEED 225 SQ. FT.
5. ALL NEW 1" PIPE TO BE BLACK STL., SCH. 40 WITH THREADED ENDS AND JOINED BY BLK. DUCTULE IRON THREADED FITTINGS.
6. PIPE HANGERS TO BE INSTALLED PER NFPA 13.
7. NO HYDRAULIC CALCULATIONS WERE PERFORMED. AREA OF WORK IS ABOVE AND BELOW PROTECTION. THE OFFICE AREA IS LESS DEMANDING THEN THE EXISTING OVERHEAD SYSTEM.

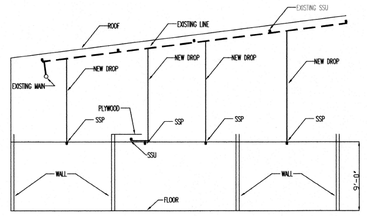


ELEVATION DETAIL
N.T.S.

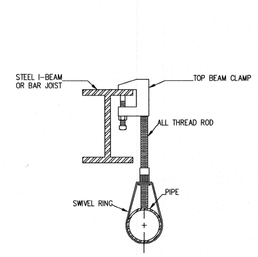


BEAM CLAMP HANGER DETAIL
N.T.S.

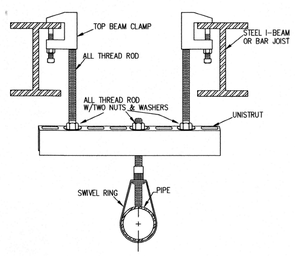


UNISTRUT HANGER DETAIL
N.T.S.

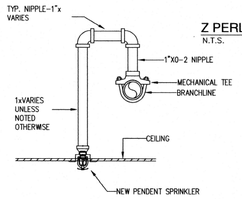


RETURN BEND DETAIL
N.T.S.

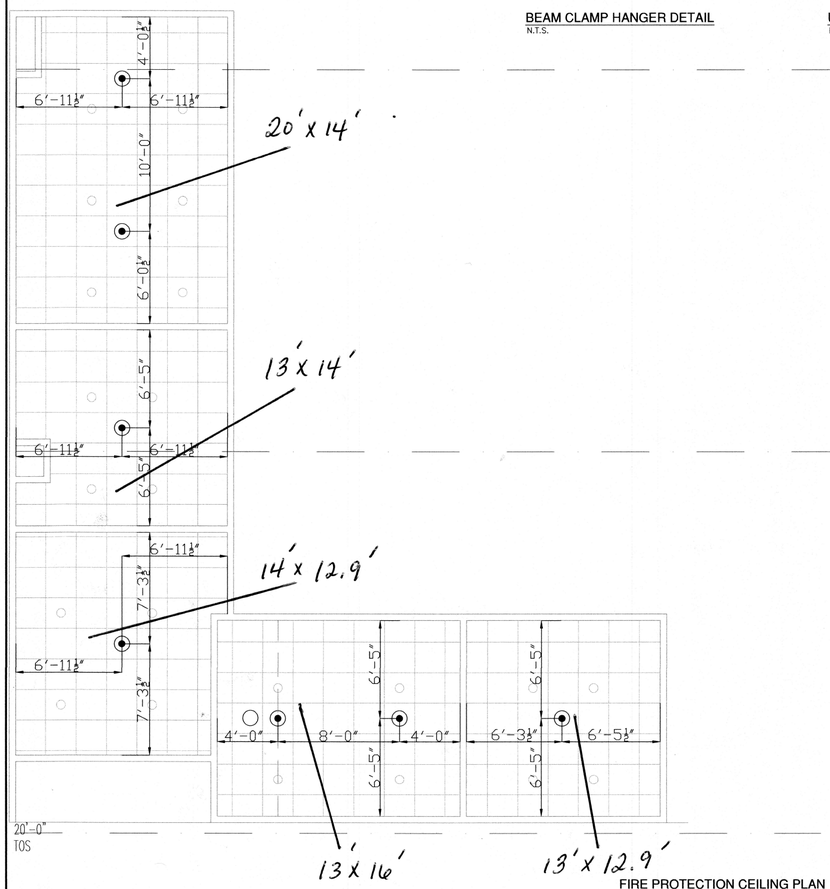


FIRE PROTECTION CEILING PLAN
SCALE:1/4"=1'-0"

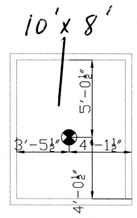


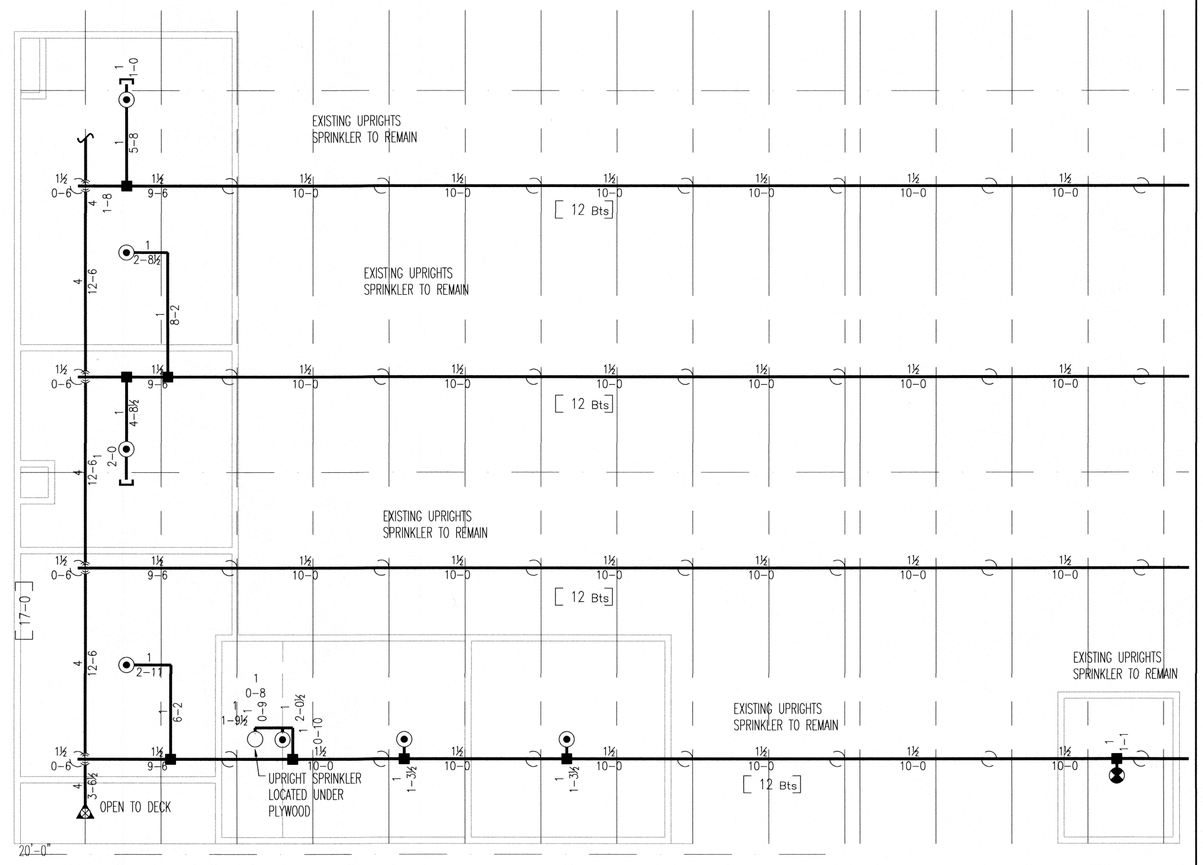


FIRE PROTECTION PIPING PLAN
SCALE:1/4"=1'-0"

N W E S
2' 4' 6' 8' 10' 12' 14' 16' 18'

**IMPORTANT**

Building areas subject to freezing conditions, it is the owner's responsibility to provide heat throughout the wet pipe sprinkler system areas and in enclosures for dry pipe, deluge, and other types of valves controlling water supplies to sprinkler systems.

**REVISIONS**

| DATE | DESCRIPTION | BY |
|---|---|---|
| | | |

**SPRINKLER SYMBOLS DESCRIPTION**

| SYMBOL | SIZE | TEMP | STYLE | MAKE | MODEL/SIN | FINISH | ESCUTCHEON | K-FACTOR | RESPONSE | QUANTITY |
|---|---|---|---|---|---|---|---|---|---|---|
| | 1/2" | 155 | PENDENT | TYCO | TYFRB/TY3231 | CHR | RECESSED | 5.6 | QR | 7 |
| | 1/2" | 155 | UPRIGHT | TYCO | TYFRB/TY3131 | BRASS | NONE | 5.6 | QR | 1 |
| | 1/2" | 155 | PENDENT | TYCO | TYFRB/TY3231 | CHR | DEEP | 5.6 | QR | 1 |
| | EXESTING UPRIGHT SPRINKLER TO REMAIN | | | | | | | | | |
| TOTAL SPRINKLERS THIS SHEET | | | | | | | | | | 9 |
| TOTAL SPRINKLERS ON JOB | | | | | | | | | | 9 |

CHECKED BY:

NORTH CAROLINA LICENSED SPRINKLER CONTRACTOR JOHN PITCHER: NC# 16330 INC. FIRE PROTECTION

NORTH CAROLINA LICENSED SPRINKLER CONTRACTOR DOUGLAS JOHNSTON II: NC# 16330 INC. FIRE PROTECTION

NICET LEVEL III #117811

NC LICENSE NUMBER: 16330

CROSSROADS FIRE PROTECTION


Crossroads Fire Protection Inc
809 South Market Street
P.O. Box 926
Benson, NC 27504
(919) 207-3855


WAREHOUSE OFFICE
125 ALEXANDER DR.
LILLINGTON, NC

CONTRACTOR: HARNETT COUNTY SCHOOL

**FIRE PROTECTION PLAN**

| | |
|---|---|
| PERMIT NO. | |
| CONTRACT NO. | |
| APPROVAL | CC-9365 |
| DRAWN BY | DOUGLAS JOHNSTON II |
| SCALE | 1/4"=1'-0" |
| DATE | 3/25/22 |
| REVISED | |
| PLOTTED | FP1 OF 1 |