Sprinkler Design Data

Project Name:	Angier Black River Fire Department		System: 1
Project Street Address:	309 North Broad Street East		Sys. Sq. Ft.:
Suite: n/a		Floor#: 2nd	Ceiling Height: varies
Designed By: M.Ford		Phone: 910-892-1700	Total Bldg. Hgt.: varies
Occupancy: Fire Department		Hazard: OH1 & LIGHT	

Design Summary

	System #1	System #1			
Design Method	Hydraulic Calculated	Hydraulic Calculated			
Design Area #	1	2			
Location	New Addition	Existing			
Type of System	Wet	Wet			
Hazard Class	OH1 & Light	Light			
Criteria From	NFPA 13	NFPA 13			
Design Area	1513 Sq.Ft.	1543 Sq.Ft.			
Sprinkler Spacing	140 Sq.Ft. Max.	140 Sq.Ft. Max.			
Density	.15 & .10	.10			
K-factor	5.6	5.6			
Hose Allowance	250	100			
# Design Sprinklers	17	25			
Special Application Spk.	n/a	n/a			
Requirement @	Test	Test			
G.P.M. Req'd	558.654	514.02			
P.S.I. Req'd	37.034	40.533			
Safety Factor @	Test=10.713 psi	Test=8.678 psi			
Dry Sys. Volume (gal)	n/a				

Water Supply Information

Tested by	Angier FD	Date/Time	8-19-21	Pressure Hydrant	
Hydrant Elevation		Flow Hydrant # 1		Flow Hydrant #2	
Static (PSI)	58	Residual (PSI)	29	Flow (gpm)	980 gpm
Copy of Water Test Data Included with Calculation is required					

Victaulic Vicflex Stainless Steel Sprinkler Fitting System:

In lieu of rigid pipe offsets or return bends for sprinkler drops, the Victaulic Vicflex Stainless Steel Sprinkler Fitting System may be used to locate sprinklers as required by final finished ceiling tiles and walls. The drop system shall consist of a braided or unbraided (corrugated) type 304 stainless steel flexible tube, a zinc plated steel 1" NPT Male threaded nipple for connection to branchline piping, and a zinc plated steel reducer with a 1/2" or 3/4" NPT female thread for connection to the sprinkler head. Union joints shall be provided for ease of installation. The flexible drop shall attach to the ceiling grid using a one-piece open gate bracket. (The bracket shall allow for sprinkler installation before or after the bracket is secured to the sprinkler grid.) The braided drop system is FM Approved for sprinkler services to 200 psi (1380 kPa) and can be installed without the use of tools, and the corrugated system is UL Listed for sprinkler services to 175 psi (1207 kPa).

a. All hoses shall be factory-pressure tested to 400 psi. (2760 kPa).
b. Approvals:
a. FM-1637 (Braided)
b. UL 2443 (Unbraided / Corrugated)
c. NYC MEA 60-05-E
d. City of Los Angeles 5/1/09 - 5/1/10.

PRODUCT LEGEND

1 1" NIPPLE (INLET)
2 NUT
3 ADAPTER RING
4 COLLAR
5 304 STAINLESS STEEL FLEXIBLE BRAIDED HOSE (1" NOMINAL DIAMETER) (LENGTHS AVAILABLE 31", 48", 60", & 72")
6 COLLAR
7 NUT
8 REDUCING OUTLET (AVAILABLE 1/2" OR 3/4" FMPT)
9 CENTER BRACKET ASSEMBLY
10 SQUARE BAR (AVAILABLE IN 24" AND 48" LENGTHS)
11 END BRACKET ASSEMBLY
12 SHEET METAL SCREW

SEE VICTAULIC SUBMITTAL NUMBER 10.85

NOTE
MODEL AH2 VICFLEX HOSE 6'-0" LONG EQUIVALANT LENGTH OF 1" SC.40 PIPE 55' ALL DROPS IN HYDRAULIC CALCULATIONS WERE BASED ON USING 6' FLEXDROPS

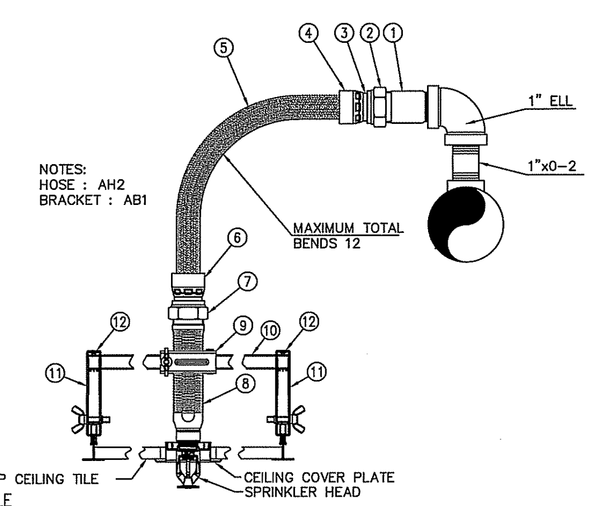

FM

NOTES:
1. REFER TO VICTAULIC SUBMITTAL 10.85 FOR ADDITIONAL DETAILS.
2. THIS PRODUCT IS APPROVED TO APPLICABLE FM STANDARDS AND REQUIREMENTS BY FACTORY MUTUAL 1637

Victaulic

BRAIDED VICFLEX FLEXIBLE HOSE SPRINKLER ASSEMBLIES FOR STANDARD PENDENT SPRINKLERS

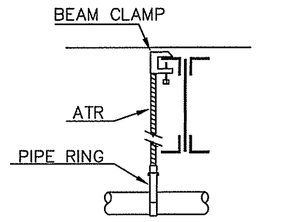

#9 HANGER DETAIL
NTS

HANGER INSTALLATION REQUIREMENTS

MAXIMUM DISTANCE BETWEEN HANGERS

NOMINAL PIPE SIZE	3/4"	1"	1-1/4"	1-1/2"	2"	2-1/2"	3"	4"	
BLAZEMASTER CPVC	5' 6"	6' 0"	6' 6"	7' 0"	8' 0"	9' 0"	10' 0"	N/A	N/A
THREADABLE LIGHTWALL	N/A	12' 0"	12' 0"	12' 0"	12' 0"	12' 0"	12' 0"	N/A	N/A
STEEL PIPE (10/40)	N/A	12' 0"	12' 0"	15' 0"	15' 0"	15' 0"	15' 0"	15' 0"	15' 0"

THE UNSUPPORTED LENGTH BETWEEN THE END SPRINKLER AND THE LAST HANGER ON THE LINE SHALL NOT EXCEED 36" FOR 1" PIPE, 48" FOR 1 1/4" PIPE AND 60" FOR 1 1/2" PIPE OR LARGER

THE CUMULATIVE HORIZONTAL LENGTH OF AN UNSUPPORTED ARMOVER TO A SPRINKLER, SPRINKLER DROP, OR SPRIG-UP SHALL NOT EXCEED 24"

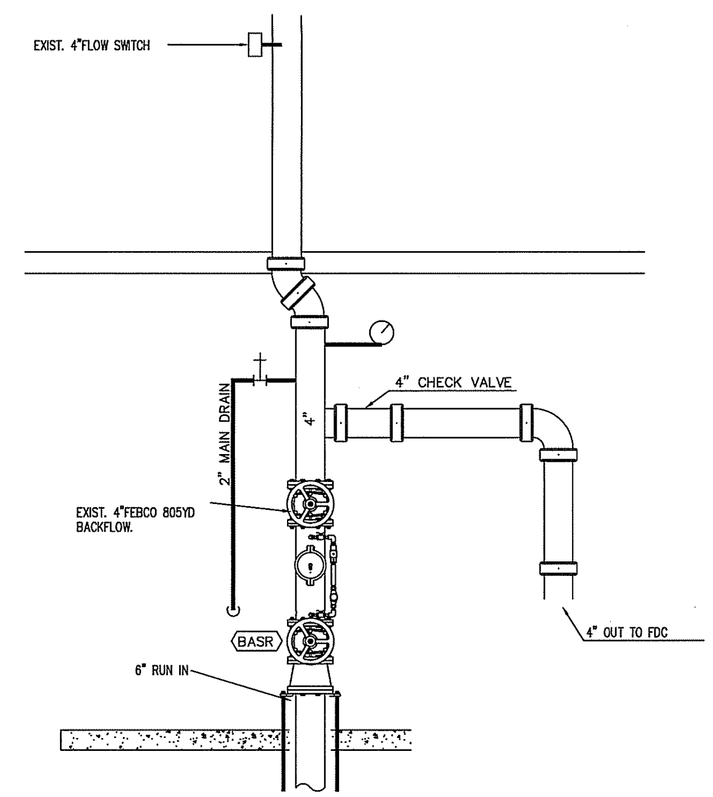

EXISTING RISER DETAIL
NOT TO SCALE

System No. W-L 1001
(Formerly System No. 147)
F Ratings-1,2,3 and 4 hr (See items 2 and 3)
T Ratings-0,1,2,3, and 4 Hr (See item 3)
L Rating At Ambient-less than 1 CFM/sq ft
L Rating At 400 F- less than 1 CFM/sq ft

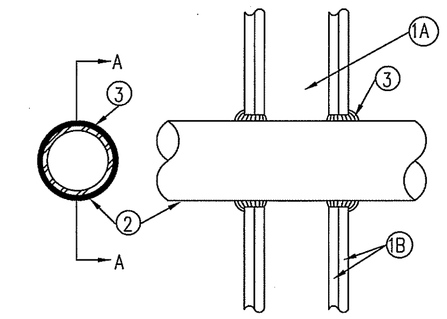

SECTION A-A

the following construction features:
A. Studs- Wall framing may consist of either wood studs (max 2 h fire rated assemblies) or steel channel studs. Wood studs to consist of nom 2 by 4 in. lumber spaced 16 in. OC with nom. 2 by 4 in. lumber end plates and cross braces. Steel studs to be min. 3-5/8 in. wide by 1-3/8 in. deep channels spaced max 24 in. OC
B. Wallboard, Gypsum*-Nom 1/2 or 5/8 in. thick, 4 ft. wide with square or tapered edges. The gypsum wallboard type, thickness, number of layers, fastener type and sheet orientation shall be as specified in the individual U300 or U400 Series Design in the UL Fire Resistnace Directory. Max. diam of opening is 13-1/2 in.
2.Pipe or Conduit-Nom. 12 in. diam (or smaller) Schedule 10 (or heavier) steel pipe, nom 12 in. diam (or smaller) Class 50 (or heavier) ductile iron pressure pipe, nom. 6 in.diam (or smaller) steel conduit, nom 4 in. diam (or smaller) steel electrical metallic tubing, nom 6 in. diam (or smaller) Type L or (or heavier) copper tubing or nom 1 in. diam (or smaller) flexible steel conduit.
3.Fill, Void or Cavity Material*-Caulk-Caulk fill material installed to completely fill annular space between pipe or conduit and gypsum wallboard and with a min. 1/4 in. diam bead of caulk applied to perimeter of pipe or conduit at its egress from wall. Caulk installed symmetrically on both sides of wall assembly. The hourly f Rating of the firestop system is dependent upon the hourly rating of the wall assembly in which it is installed, as shown in the following table. The hourly T rating of the firestop system is dependent upon the type pr size of the pipe or conduit and the hourly fire rating of the wall assembly in which it is installed, as tabulated below:

Max Pipe or Conduit Diam, In	Annular Space, In	F Rating Hr	T Rating Hr
1	0 to 3/16	1 or 2	0+,1 or 2
1	1/4 to 1/2	3 or 4	3 or 4
4	0 to 1/4	1 or 2	0
4	0 to 1-1/2#	1 or 2	0
6	1/4 to 1/2	3 or 4	0
12	3/16 to 3/8	1 or 2	0

+When copper pipe is used, TRating is 0 h.
#0 to 1-1/2 in. annular space applies only when Type CP-25 WB+ caulk is used and only when the min. thickness of the gypsum wallboard is 5/8 in. for 1 hr rated walls and 1-1/4 in. for 2 hr rated walls

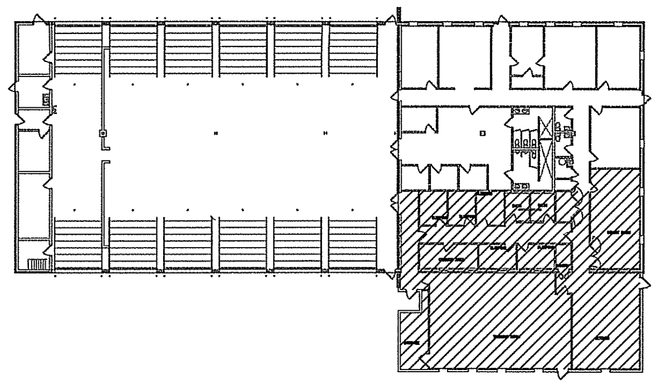

KEY PLAN
NTS

NO.	DATE	REVISIONS - SEE FLAGGED AREA ON PLAN

IMPORTANT

In locations that are subject to freezing conditions, it is the owner's responsibility to provide heat throughout areas protected by wet pipe sprinkler systems and in enclosures for dry pipe, deluge or other types of valves controlling water supplies to sprinkler systems.

This drawing including all information and design concept herein contained is the property of Carolina Fire Protection Company, Inc. and is loaned upon express conditions that the same be returned to CFP,Inc. upon request: all information contained herein shall be treated as secret, and confidential: no reproduction of this drawing or any part thereof shall be made without written consent of CFP,Inc.

CONTRACT RESPONSIBILITIES

ITEM	C.F.P. /OTHERS
STREET WATER CONNECTION	N/A
UNDERGROUND WATER MAINS	N/A
EXCAVATIONS	N/A
BACKFILL	N/A
WIRING	N/A
PAINTING	N/A

SYMBOLS

- (8-D) CEILING HT. ABOVE REF.
- *13 C/L OF PIPE BELOW BOD
- 12-4 C/L OF PIPE ABOVE REF.
- (101) HYDRAULIC REF. POINT
- #10 LINE DESIGNATION
- A1 MAIN DESIGNATION
- HANGER
- UNION
- GROOVED COUPLING (GC)
- SCREWED CAP
- GROOVED CAP
- SCREWED PLUG
- FLANGED CONNECTION
- GATE VALVE(SEE NOTES)
- FIRE HOSE ASSEMBLY
- FS FLOW SWITCH (FS)
- M MONITOR SWITCH
- BUTTERFLY VALVE
- ALV ALARM VALVE (ALV)
- DRY PIPE VALVE
- WAFER CHECK VALVE
- SWING CHECK VALVE
- SYSTEM RISER
- INSPECTOR'S TEST
- GLOBE VALVE
- ANGLE VALVE
- ELECTRIC BELL
- WMG WATER MOTOR GONG (WMG)
- FIRE DEPT.CONN.(STANDARD)
- FIRE DEPT.CONN.(FLUSH)
- FIRE DEPT.CONN.(SIDEWALK)
- POST INDICATOR VALVE (PIV)
- KEY GATE SECTIONAL VALVE WITH ROADWAY BOX
- FIRE HYDRANT (3 WAY)
- THRUST BLOCK
- 2&4 WAY SEISMIC BRACING
- (LOW) (HIGH) ELEVATION CHANGE IN PIPE (NOT THROUGH FLOOR)

ABBREVIATIONS

BOB	Bottom of Beam
BOD	Bottom of Deck
BOP	Bottom of Pipe
DO	Ditto
HV	Hose Valve
N & C	Nipple and Cap
NIC	Not In Contract
NTS	Not to Scale
OBJ	Open Bar Joist
PRV	Pressure Red. Valve
RM	Roof Manifold
SP	Standpipe
TOB	Top of Beam
TOP	Top of Pipe
TOS	Top of Steel
UNO	Unless Noted Otherwise

SYSTEM TYPE

WET- [X] DELUGE- [ ]
DRY- [X] PREACTION- [ ]

APPROVALS

	OUT	IN
[ ] ISO		
[ ] IRI		
[ ] FM		
[ ]		

NORTH CAROLINA LICENSED AUTOMATIC SPRINKLER CONTRACTOR NC # 23789 MINIMUM FIRE PROTECTION, INC.

SPRINKLER SYMBOL DESCRIPTION

SYMBOL	SIZE	MODEL	MAKE	SIN	FINISH	STYLE	TEMP	K-FACTOR	TOTAL
	1/2	SR	RELIABLE	RA1314	WHITE	RECESSED PENDENT	155°	5.6	44
	1/2	SR	RELIABLE	RA1314	WHITE	RECESSED PENDENT	200°	5.6	2
	1/2	QR	RELIABLE	RA1325	BRASS	UPRIGHT ON 1" SPRIG-UP	155°	5.6	4
	1/2	QR	RELIABLE	RA1325	BRASS	UPRIGHT	155°	5.6	8
TOTAL SPRINKLERS SHOWN ON THIS SHEET									0
TOTAL SPRINKLERS REQUIRED ON THIS CONTRACT									58

CAROLINA FIRE PROTECTION
4055 HODGES CHAPEL ROAD
Dunn,N.C. 28334
Phone (910) 892-1700
Fax (910) 892-7322

CONTRACT NAME: ANGIER & BLACK RIVER FIRE DEPARTMENT
309 N. Broad Street East
Angier, NC

CONTRACT WITH: T.A. LOVING COMPANY

DESCRIPTION: INFORMATION

SYSTEM DESIGN DATA

HAZARD CLASSIFICATION:		SYSTEM AREA:	SQ.FT.
HYDRAULIC DESIGN DATA: DENSITY:	GPM/SQ. FT.	COVERAGE:	SQ.FT./HEAD
AREA OF APPLICATION:	SQ. FT.	HOSE ALLOWANCES:	GPM
TOTAL SYSTEM REQUIREMENTS:	GPM, AT	PSI. AT	
WATER SUPPLY INFORMATION: STATIC PRESSURE:	PSI. RESIDUAL PRESSURE:	PSI. w/	GPM FLOWING

SEE SHEET FP-1 FOR DESIGN CRITERIA

CHECKED BY: K.WILDER
DATE: 8/24/21
SCALE: 1/8"=1'-0"
CONTRACT NO: 21G592
DRAWN BY: M.FORD
DRAWING NO. FP 1 of 3

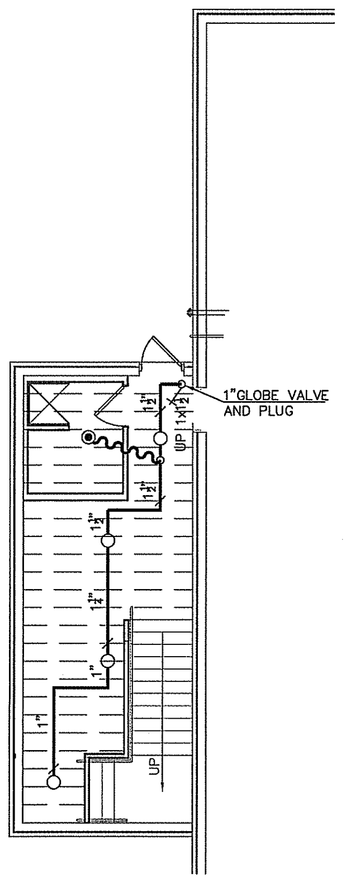

MEZZ. PLAN

SCALE: 1/8"=1'-0"

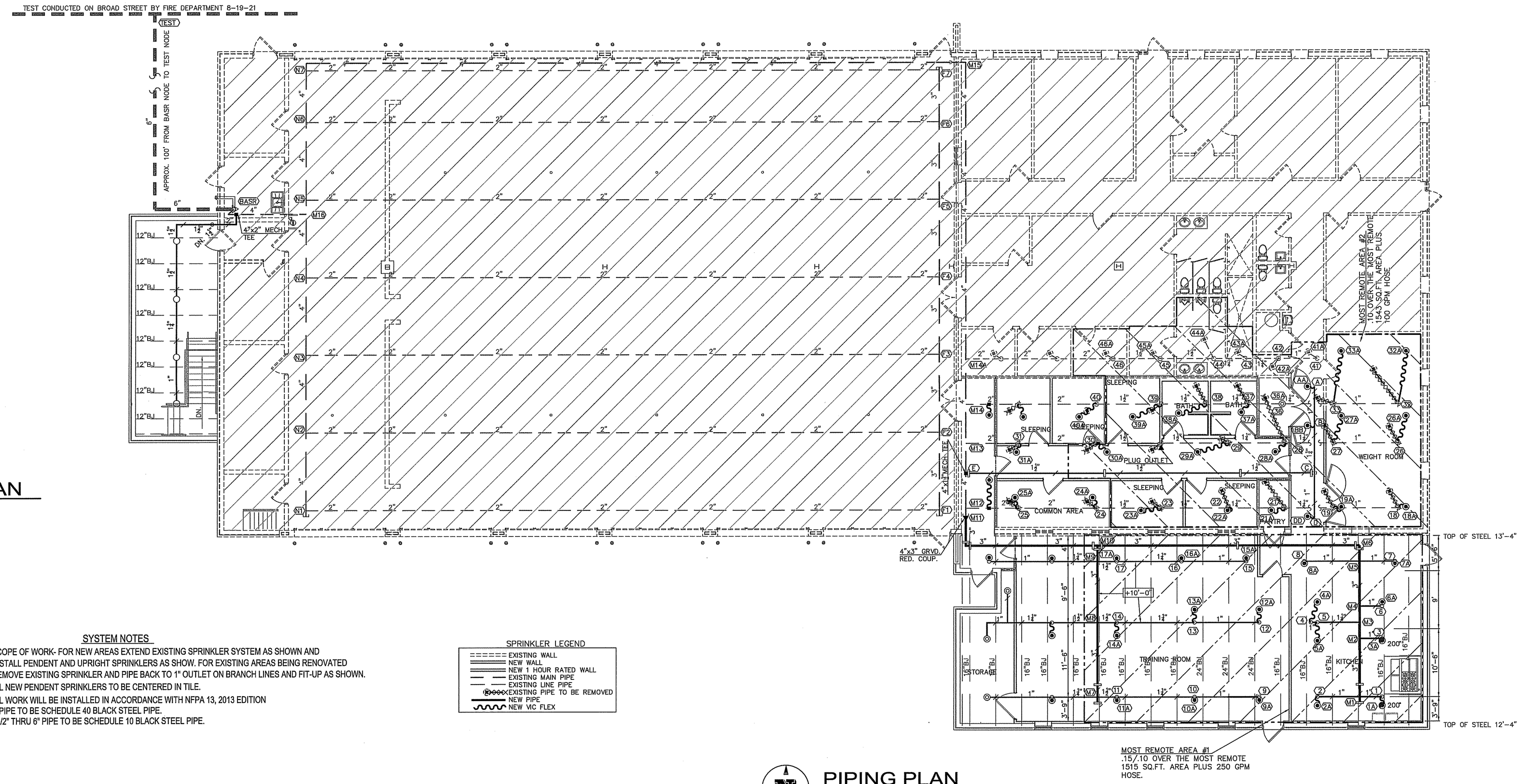

PIPING PLAN

SCALE: 1/8"=1'-0"

SYSTEM NOTES

-SCOPE OF WORK- FOR NEW AREAS EXTEND EXISTING SPRINKLER SYSTEM AS SHOWN AND INSTALL PENDENT AND UPRIGHT SPRINKLERS AS SHOW. FOR EXISTING AREAS BEING RENOVATED REMOVE EXISTING SPRINKLER AND PIPE BACK TO 1" OUTLET ON BRANCH LINES AND FIT-UP AS SHOWN.

-ALL NEW PENDENT SPRINKLERS TO BE CENTERED IN TILE.

-ALL WORK WILL BE INSTALLED IN ACCORDANCE WITH NFPA 13, 2013 EDITION

-1" PIPE TO BE SCHEDULE 40 BLACK STEEL PIPE.

-1 1/2" THRU 6" PIPE TO BE SCHEDULE 10 BLACK STEEL PIPE.

SPRINKLER LEGEND

- EXISTING WALL
- NEW WALL
- NEW 1 HOUR RATED WALL
- EXISTING MAIN PIPE
- EXISTING LINE PIPE
- EXISTING PIPE TO BE REMOVED
- NEW PIPE
- NEW VIC FLEX

NO.	DATE	REVISIONS - SEE FLAGGED AREA ON PLAN

IMPORTANT

In locations that are subject to freezing conditions, it is the owner's responsibility to provide heat throughout areas protected by wet pipe sprinkler systems and in enclosures for dry pipe, deluge or other types of valves controlling water supplies to sprinkler systems.

This drawing including all information and design concept herein contained is the property of Carolina Fire Protection Company, Inc. and is loaned upon express conditions that the same be returned to CFP,Inc. upon request: all information contained herein shall be treated as secret, and confidential: no reproduction of this drawing or any part thereof shall be made without written consent of CFP,Inc.

CONTRACT RESPONSIBILITIES

ITEM	C.F.P. /OTHERS
STREET WATER CONNECTION	N/A
UNDERGROUND WATER MAINS	N/A
EXCAVATIONS	N/A
BACKFILL	N/A
WIRING	N/A
PAINTING	N/A

SYMBOLS

- CEILING HT. ABOVE REF.
- C/L OF PIPE BELOW BOD
- C/L OF PIPE ABOVE REF.
- HYDRAULIC REF. POINT
- LINE DESIGNATION
- MAIN DESIGNATION
- HANGER
- UNION
- GROOVED COUPLING (GC)
- SCREWED CAP
- GROOVED CAP
- SCREWED PLUG
- FLANGED CONNECTION
- GATE VALVE(SEE NOTES)
- FIRE HOSE ASSEMBLY
- FLOW SWITCH (FS)
- MONITOR SWITCH
- BUTTERFLY VALVE
- ALARM VALVE (ALV)
- DRY PIPE VALVE
- WAFER CHECK VALVE
- SWING CHECK VALVE
- SYSTEM RISER
- INSPECTOR'S TEST
- GLOBE VALVE
- ANGLE VALVE
- ELECTRIC BELL
- WATER MOTOR GONG (WMG)
- FIRE DEPT.CONN.(STANDARD)
- FIRE DEPT.CONN.(FLUSH)
- FIRE DEPT.CONN.(SIDEWALK)
- POST INDICATOR VALVE (PIV)
- KEY GATE SECTIONAL VALVE WITH ROADWAY BOX
- FIRE HYDRANT (3 WAY)
- THRUST BLOCK
- 2&4 WAY SEISMIC BRACING
- (LOW) (HIGH) ELEVATION CHANGE IN PIPE (NOT THROUGH FLOOR)

ABBREVIATIONS

BOB	Bottom of Beam
BOD	Bottom of Deck
BOP	Bottom of Pipe
DO	Ditto
HV	Hose Valve
N & C	Nipple and Cap
NIC	Not in Contract
NTS	Not to Scale
OBJ	Open Bar Joist
PRV	Pressure Red. Valve
RM	Roof Manifold
SP	Standpipe
TOB	Top of Beam
TOP	Top of Pipe
TOS	Top of Steel
UNO	Unless Noted Otherwise

SYSTEM TYPE

WET- [X] DELUGE- [ ]

DRY- [X] PREACTION- [ ]

APPROVALS

	OUT	IN
[ ] ISO		
[ ] IRI		
[ ] FM		
[ ]		

NORTH CAROLINA LICENSED SPRINKLER CONTRACTOR NC # 23768 CAROLINA FIRE PROTECTION INC.

SPRINKLER SYMBOL DESCRIPTION

SYMBOL	SIZE	MODEL	MAKE	SIN	FINISH	STYLE	TEMP	K-FACTOR	TOTAL
	1/2	SR	RELIABLE	RA1314	WHITE	RECESSED PENDENT	155°	5.6	44
	1/2	SR	RELIABLE	RA1314	WHITE	RECESSED PENDENT	200°	5.6	2
	1/2	QR	RELIABLE	RA1325	BRASS	UPRIGHT ON 1" SPRIG-UP	155°	5.6	4
	1/2	QR	RELIABLE	RA1325	BRASS	UPRIGHT	155°	5.6	8
TOTAL SPRINKLERS SHOWN ON THIS SHEET									58
TOTAL SPRINKLERS REQUIRED ON THIS CONTRACT									58

CAROLINA FIRE PROTECTION
4055 HODGES CHAPEL ROAD
Dunn,N.C. 28334
Phone (910) 892-1700
Fax (910) 892-7322

CONTRACT NAME: ANGIER & BLACK RIVER FIRE DEPARTMENT
309 N. Broad Street East
Angier, NC

CONTRACT WITH: T.A. LOVING COMPANY

DESCRIPTION: PIPING PLAN

SYSTEM DESIGN DATA

HAZARD CLASSIFICATION:			SYSTEM AREA:		SQ. FT.
HYDRAULIC DESIGN DATA	DENSITY:	GPM/SQ. FT.	COVERAGE:		SQ. FT./HEAD
AREA OF APPLICATION:		SQ. FT.	HOSE ALLOWANCES:		GPM
TOTAL SYSTEM REQUIREMENTS:		GPM, AT	PSI, AT		
WATER SUPPLY INFORMATION:	STATIC PRESSURE: PSI.	RESIDUAL PRESSURE:	PSI. w/		GPM FLOWING

SEE SHEET FP-1 FOR DESIGN CRITERIA

CHECKED BY:	K.WILDER
DATE:	8/24/21
SCALE:	1/8"=1'-0"
CONTRACT NO:	21G592
DRAWN BY:	M.FORD
DRAWING NO.	FP 2 of 3

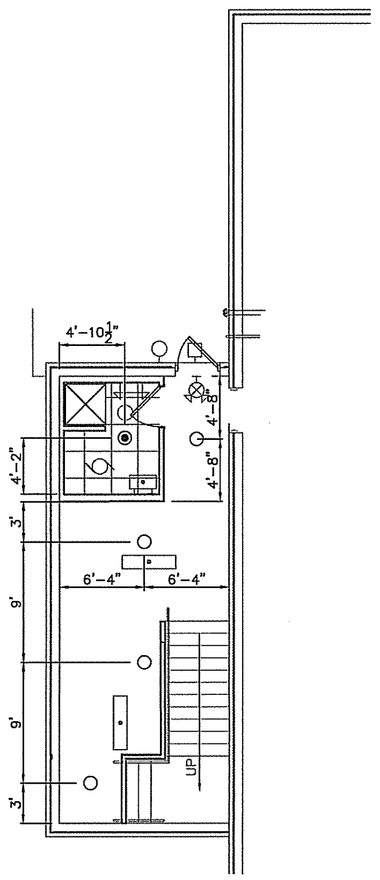

MEZZ. PLAN

SCALE: 1/8"=1'-0"

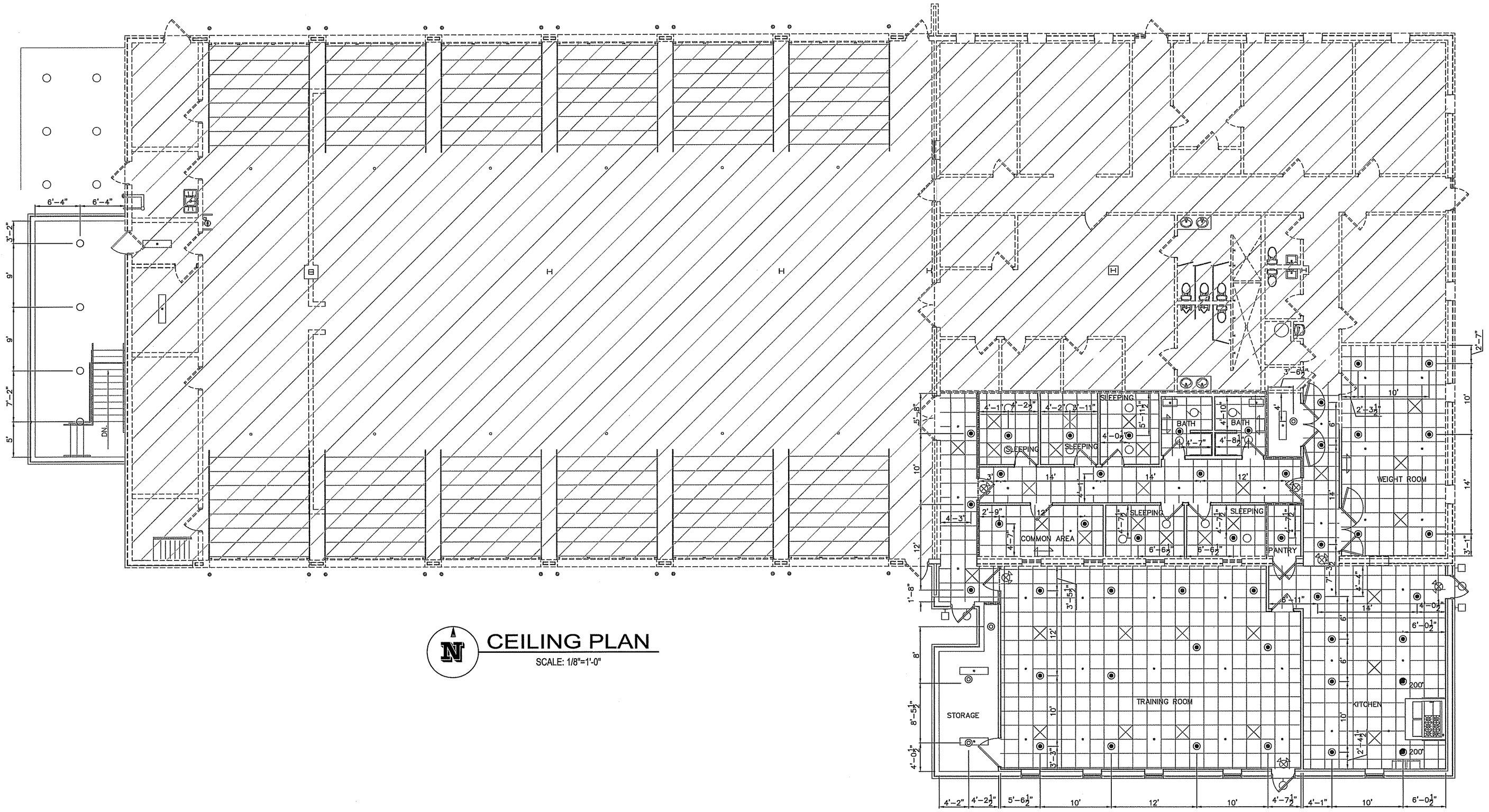

CEILING PLAN

SCALE: 1/8"=1'-0"

IMPORTANT

In locations that are subject to freezing conditions, it is the owner's responsibility to provide heat throughout areas protected by wet pipe sprinkler systems and in enclosures for dry pipe, deluge or other types of valves controlling water supplies to sprinkler systems.

This drawing including all information and design concept herein contained is the property of Carolina Fire Protection Company, Inc. and is loaned upon express conditions that the same be returned to CFP,Inc. upon request: all information contained herein shall be treated as secret, and confidential: no reproduction of this drawing or any part thereof shall be made without written consent of CFP,Inc.

CONTRACT RESPONSIBILITIES

ITEM	C.F.P. /OTHERS
STREET WATER CONNECTION	N/A
UNDERGROUND WATER MAINS	N/A
EXCAVATIONS	N/A
BACKFILL	N/A
WIRING	N/A
PAINTING	N/A

SYMBOLS

- (8-D) CEILING HT. ABOVE REF.
- *13 C/L OF PIPE BELOW BOD
- 12-4 C/L OF PIPE ABOVE REF.
- (101) HYDRAULIC REF. POINT
- WMS LINE DESIGNATION
- A1 MAIN DESIGNATION
- HANGER
- UNION
- GROOVED COUPLING (GC)
- SCREWED CAP
- GROOVED CAP
- SCREWED PLUG
- FLANGED CONNECTION
- GATE VALVE(SEE NOTES)
- FIRE HOSE ASSEMBLY
- FLOW SWITCH (FS)
- MONITOR SWITCH
- BUTTERFLY VALVE
- ALARM VALVE (ALV)
- DRY PIPE VALVE
- WAFER CHECK VALVE
- SWING CHECK VALVE
- SYSTEM RISER
- INSPECTOR'S TEST
- GLOBE VALVE
- ANGLE VALVE
- ELECTRIC BELL
- WATER MOTOR GONG (WMG)
- FIRE DEPT.CONN.(STANDARD)
- FIRE DEPT.CONN.(FLUSH)
- FIRE DEPT.CONN.(SIDEWALK)
- POST INDICATOR VALVE (PIV)
- KEY GATE SECTIONAL VALVE WITH ROADWAY BOX
- FIRE HYDRANT (3 WAY)
- THRUST BLOCK
- 284 WAY SEISMIC BRACING
- (LOW) (HIGH) ELEVATION CHANGE IN PIPE (NOT THROUGH FLOOR)

ABBREVIATIONS

BOB	Bottom of Beam
BOD	Bottom of Deck
BOP	Bottom of Pipe
DO	Ditto
HV	Hose Valve
N & C	Nipple and Cap
NIC	Not In Contract
NTS	Not to Scale
OBJ	Open Bar Joist
PRV	Pressure Red. Valve
RM	Roof Manifold
SP	Standpipe
TOB	Top of Beam
TOP	Top of Pipe
TOS	Top of Steel
UNO	Unless Noted Otherwise

SYSTEM TYPE

WET- [X] DELUGE- [ ]
DRY- [X] PREACTION- [ ]

APPROVALS

	OUT	IN
[ ] ISO		
[ ] IRI		
[ ] FM		
[ ]		

NORTH CAROLINA LICENSED AND INSURED SPRINKLER CONTRACTOR NC # 23769 CAROLINA FIRE PROTECTION, INC.

SPRINKLER SYMBOL DESCRIPTION

SYMBOL	SIZE	MODEL	MAKE	SIN	FINISH	STYLE	TEMP	K-FACTOR	TOTAL
◉	1/2	SR	RELIABLE	RA1314	WHITE	RECESSED PENDENT	155°	5.6	44
◉	1/2	SR	RELIABLE	RA1314	WHITE	RECESSED PENDENT	200°	5.6	2
◎	1/2	QR	RELIABLE	RA1325	BRASS	UPRIGHT ON 1" SPRIG-UP	155°	5.6	4
○	1/2	QR	RELIABLE	RA1325	BRASS	UPRIGHT	155°	5.6	8
TOTAL SPRINKLERS SHOWN ON THIS SHEET									58
TOTAL SPRINKLERS REQUIRED ON THIS CONTRACT									58

CAROLINA FIRE PROTECTION
4055 HODGES CHAPEL ROAD
Dunn,N.C. 28334
Phone (910) 892-1700
Fax (910) 892-7322

NO.	DATE	REVISIONS - SEE FLAGGED AREA ON PLAN

CONTRACT NAME: ANGIER & BLACK RIVER FIRE DEPARTMENT
309 N. Broad Street East
Angier, NC

CONTRACT WITH: T.A. LOVING COMPANY

DESCRIPTION: CEILING PLAN

SYSTEM DESIGN DATA

HAZARD CLASSIFICATION:			SYSTEM AREA:		SQ. FT.
HYDRAULIC DESIGN DATA	DENSITY:	GPM/SQ. FT.	COVERAGE:		SQ. FT./HEAD
AREA OF APPLICATION:		SQ. FT.	HOSE ALLOWANCES:		GPM
TOTAL SYSTEM REQUIREMENTS:		GPM. AT	PSI. AT		
WATER SUPPLY INFORMATION:	STATIC PRESSURE:	PSI. RESIDUAL PRESSURE:	PSI. w/		GPM FLOWING

SEE SHEET FP-1 FOR DESIGN CRITERIA

CHECKED BY: K.WILDER
DATE: 8/24/21
SCALE: 1/8"=1'-0"
CONTRACT NO: 21G592
DRAWN BY: M.FORD
DRAWING NO. FP 3 of 3