AutoZone

65W2-R

INDEX OF SHEETS:

OWNER: AutoZone Development Corporation
Contact: CAROLYN THAEMERT
Voice: (901) 495-8994
Fax: (901) 495-8991

LIFE SAFETY NOTES:

DOORS:
EXIT DOORS TO BE OPERABLE FROM THE INSIDE WITHOUT THE USE OF A KEY OR SPECIAL KNOWLEDGE OR EFFORT. EXCEPTION: MAIN EXIT DOOR HAS KEY-LOCKING HARDWARE. GENERAL CONTRACTOR TO PROVIDE A READABLE VISIBLE, DURABLE SIGN ON OR ADJACENT TO THE DOOR STATING "THIS DOOR TO REMAIN UNLOCKED WHEN BUILDING IS OCCUPIED". SIGN TO BE ONE INCH HIGH LETTERS ON CONTRASTING BACKGROUND.

EXIT ILLUMINATION:
EXITS TO BE ILLUMINATED AT ANY TIME THE BUILDING IS OCCUPIED WITH LIGHT HAVING INTENSITY OF NOT LESS THAN ONE FOOTCANDLE AT FLOOR LEVEL. THE POWER SUPPLY FOR EXIT ILLUMINATION HAS BATTERY BACKUP IN THE EVENT OF A POWER FAILURE.

EXIT SIGNS:
EXIT SIGNS TO BE INSTALLED AT THE REQUIRED EXITS FROM THE ROOM OR AREA AND WHEN OTHERWISE NECESSARY TO CLEARLY INDICATE THE DIRECTION OF EGRESS. GRAPHICS, ILLUMINATION AND POWER SUPPLY SHALL COMPLY WITH CHAPTER 10 OF THE IBC.

FLAMMABLE AND COMBUSTIBLE MATERIALS:
FLAMMABLE AND COMBUSTIBLE MATERIALS WILL NOT EXCEED MAXIMUM QUANTITIES ALLOWED UNDER TABLE 3404.3.4.1 OF THE IFC OR TABLE 7902.5-B OF THE UFC. THERE WILL BE NO HIGH-PILED COMBUSTIBLE STORAGE.

PORTABLE FIRE EXTINGUISHERS:
TYPE, SIZE, NUMBER AND LOCATION OF FIRE EXTINGUISHERS SHALL BE INSTALLED ACCORDING TO LOCAL REQUIREMENTS.

INTERIOR FINISHES:
INTERIOR FINISHES TO HAVE A FLAME-SPREAD RATING OF 25 OR LESS.

INSULATION:
WALL INSULATION TO HAVE A FLAME-SPREAD RATING OF NOT MORE THAN 25 AND A SMOKE DEVELOPMENT RATING OF NOT MORE THAN 450. ROOF INSULATION (FOAM PLASTIC) TO HAVE A FLAME-SPREAD RATING OF NOT MORE THAN 75 AND A SMOKE-DEVELOPED RATING OF NOT MORE THAN 450.

ROOFING:
ROOF COVERING SPECIFIED IS CLASS A.

SHELVING:
MAXIMUM HEIGHT OF SHELVING FIXTURES IS 12'-0" THERE IS NO "HIGH PILED STORAGE" IN THE STORE.

BUILDING CODE ANALYSIS

DESIGN CODES: 2018 NC BUILDING CODE
OCCUPANCY CLASSIFICATION: GROUP M (MERCANTILE)
TYPE OF CONSTRUCTION: VB UNPROTECTED
NUMBER OF STORIES: 1 ALLOWED / 1 SHOWN
BUILDING AREA: 9000 ALLOWED / 6446 SHOWN
AREA INCREASE: NOT APPLICABLE

Reviewed For Code Compliance By:
D. Banks Wallace
Chief Deputy Fire Marshal
06/12/2020 10:44:36 AM

EXTERIOR WALL RATINGS:
EXTERIOR WALLS SHALL BE CONSTRUCTED WITH LIGHT WEIGHT CONCRETE BLOCKS CONFORMING TO NCMA TEK 7-1A 1999 STANDARDS WHICH SAY THAT 8" UNITS ARE RATED FOR 2 HOURS AND THAT IF THE CORES ARE EITHER GROUTED SOLID OR FILLED WITH VERMICULITE THEY ARE RATED FOR 4 HOURS.

OCCUPANT LOAD FOR EGRESS:
MERCANTILE: 6446 / 60 = 215

EXITS:
2 EXITS REQUIRED FOR OCCUPANT LOAD > 50
EXIT WIDTH :107 OCCUPANTS X .2 = 43 IN. REQUIRED
MINIMUM = 72 IN. PROVIDED
EXIT SEPARATION: 110 = 55 FT. REQUIRED
100 FT. PROVIDED
** MAXIMUM OVERALL DIAGONAL DISTANCE
MAXIMUM TRAVEL DISTANCE: 200 / 88 SHOWN

AISLES:
MINIMUM WIDTH: 36 IN. REQUIRED / 39 IN. PROVIDED (AREAS SERVING EMPLOYEES ONLY)
MINIMUM WIDTH: 44 IN. REQUIRED / 48 IN.(min) PROVIDED (PUBLIC AREAS)
MAX. DEAD END LENGTH = 20 FT. / 15 FT. SHOWN

DEFERRED SUBMITTALS: (if required)

THE FOLLOWING ITEMS WILL BE DEFERRED SUBMITTALS IF REQUIRED: ROOF FRAMING LAYOUT PLAN & CALCS
FIXTURE ANCHORING PLAN & DETAILS
STORE FRONT PLAN & CALCS

SUBMITTAL DOCUMENTS FOR DEFERRED SUBMITTAL ITEMS SHALL BE SUBMITTED TO THE ARCHITECT OR ENGINEER OF RECORD, WHO SHALL REVIEW AND FORWARD THEM TO THE BUILDING OFFICIAL WITH A NOTATION INDICATING THAT THE DEFERRED SUBMITTAL DOCUMENTS HAVE BEEN REVIEWED AND FOUND TO BE IN GENERAL CONFORMANCE WITH THE DESIGN OF THE BUILDING.
THE DEFERRED SUBMITTAL ITEMS SHALL NOT BE INSTALLED UNTIL THEIR DESIGN AND SUBMITTED DOCUMENTS HAVE BEEN APPROVED BY THE BUILDING OFFICIAL.

SPECIAL INSPECTIONS: (if required)

IN ADDITION TO THE REGULAR INSPECTIONS, THE FOLLOWING CHECKED ITEMS WILL ALSO REQUIRE SPECIAL INSPECTIONS IN ACCORDANCE WITH SECTION 1704 OF THE INTERNATIONAL BUILDING CODE.

ITEM	REQUIRED
SOIL COMPLIANCE PRIOR TO FOUNDATION INSPECTION	YES
STRUCTURAL CONCRETE OVER 2500 PSI	YES
EXPANSION AND/OR EPOXY ANCHORS	YES
STRUCTURAL MASONRY	YES
WELDING	YES

DESIGNERS OF RECORD:

ARCHITECTURAL
Name: GEORGE CALLOW
License No: 5064
Phone No: (901)495-8705

STRUCTURAL
Name: BRIAN WAYNE
License No: 044971
Phone No: (614) 448-4106

MECHANICAL
Name: DANNY DOSS
License No: 12456
Phone No: (479) 631-1712

ELECTRICAL
Name: DANNY DOSS
License No: 12456
Phone No: (479) 631-1712

George W Callow
Digitally signed by George W Callow
Date: 2020.05.21 08:11:17 -05'00'

REVISIONS
1 REV1
2 REV2
3 REV3
4 REV4
5 REV5
6 REV6

AutoZone Store No. 6890
1593 N. MAIN ST.
LILLINGTON, NC 27546
COVER SHEET / CODE ANALYSIS

Architect: George Callow
123 South Front Street
Memphis, Tennessee 38103
TEL. 901-495-8706 FAX: (901) 495-8969
For Bidding & Contractor Information Contact:
Dodge Data & Analytics, Tel. 413-930-4215
Cindy.searcy@construction.com

GEORGE W. CALLOW REGISTERED ARCHITECT 5064 NORTH CAROLINA MEMPHIS, TN

05/06/20
65W2-R
A-0

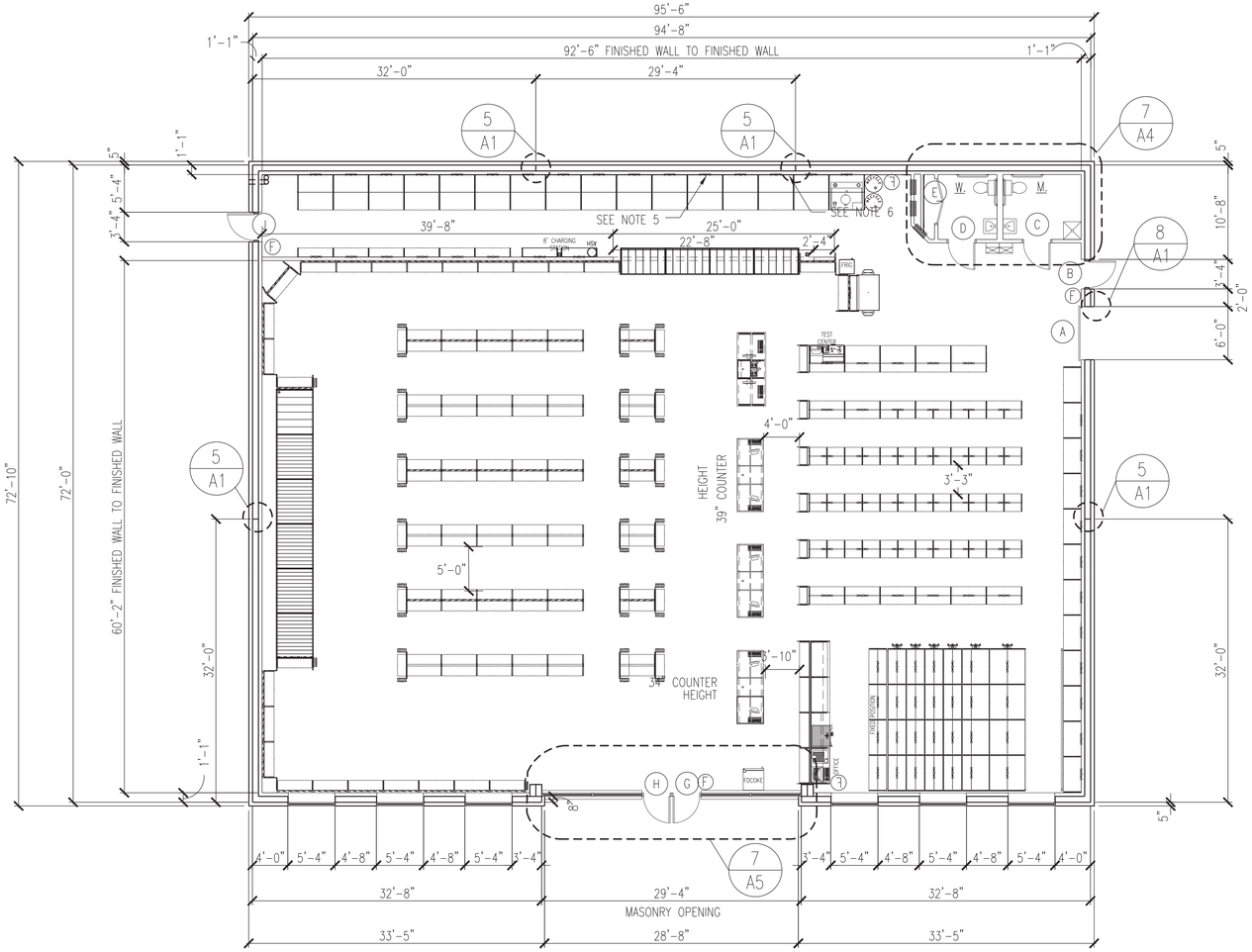

NOTE:
(F) = 2A 10BC FIRE EXTINGUISHER. GENERAL CONTRACTOR. INSTALL EITHER ON WALL SURFACE OR ALUMINUM MULLION. MOUNTING HEIGHT = 3'-6" ABOVE FINISHED FLOOR TO TOP OF EXTINGUISHER.

1/8" = 1'-0"

1 FLOOR PLAN

1. REFER TO STRUCTURAL DRAWINGS FOR ALL DETAILS AND REQUIREMENTS REGARDING FOUNDATIONS, WALL REINFORCING, BOND BEAMS, LINTELS, AND ROOF FRAMING.
2. REFER TO CIVIL DRAWINGS FOR LOCATIONS AND DETAILS OF SIDEWALKS, PIPE GUARDS, ETC., AS WELL AS FINISH FLOOR ELEVATION AND EXTERIOR FINISHED GRADES AROUND THE BUILDING.
3. INSTALL 6" WIDE, 20 GAUGE GALVANIZED SHEET METAL STRIP BETWEEN THE BACK OF THE GYPSUM BOARD AND THE FACE OF THE METAL STUD AROUND THE ENTIRE PERIMETER OF THE BUILDING, AS WELL AS BOTH SIDES OF THE CURTAIN WALL. TOP OF STRIP TO BE 93" ABOVE FINISHED FLOOR. REFER TO SHEET A-4 FOR DETAILS OF CURTAIN WALL.
4. SEE SHEET M-2 FOR LOCATION OF NON FREEZE YARD HYDRANT AND INSTALLATION REQUIREMENTS.
5. INSTALL 1/2" X 4'-0" X 8'-0" AC PLYWOOD HORIZONTALLY WITH THE LONG EDGE ON THE FLOOR AND THE END JOINT CENTERING ON A STUD. APPLY PLYWOOD TO THE FACE OF GYPSUM BOARD WITH SCREWS TO FACILITATE FUTURE REPLACEMENT. SEE INTERIOR ELEVATIONS SEE 3/A4 DETAIL.
6. SEE SPECIFICATIONS FOR INFORMATION ON ITEMS NOT COMPLETELY DELINEATED ON THE DRAWINGS.

1/8" = 1'-0" AFN01

2 FLOOR PLAN NOTES

LOCATION	FLOOR		BASE		WALLS		CLG.		REM.
	SEALED CONCRETE	VINYL TILE	VINYL	QUARRY TILE	GYPSUM BOARD	FIBER REINFORCED PANELS	METAL DECK	GYPSUM BOARD	
SALES AREA		●	●		●		●		
REST ROOMS	●		●			●		●	

3/16" = 1'-0" AFC01

3 ROOM FINISH SCHEDULE

MK	SIZE	TYPE	FRAME	JAMB DETAIL	HEAD DETAIL	ADA / EXIT HARDWARE (SEE SECTION 08700 OF THE SPECIFICATIONS)
A	6'-0" x 8'-0"	STEEL OVERHEAD ROLL-UP	STEEL ANGLE	6;7&8/A1	6&7/A1	
B	3'-0" x 7'-0" x 1-3/4"	HOLLOW METAL	HOLLOW METAL	8/A1	8/A1	PUSH BAR EXIT DEVICE WILL HAVE AN INTEGRAL SOUNDER
C	3'-0" x 6'-8" x 1-3/4"	SOLID CORE WOOD UNDERCUT DOOR 1"	HOLLOW METAL	8/A1	8/A1	LEVER HANDLE PRIVACY SETS
D	3'-0" x 6'-8" x 1-3/4"	SOLID CORE WOOD UNDERCUT DOOR 1"	HOLLOW METAL	8/A1	8/A1	LEVER HANDLE PRIVACY SETS
E	2'-6" x 6'-8" x 1-3/4"	SOLID CORE WOOD PAIR REQUIRED	HOLLOW METAL	8/A1	8/A1	UNDERCUT DOOR 1" (PAIR REQUIRED)
G	3'-0" x 7'-0" x 1-3/4"	GLASS & ALUMINUM SEE SHEET A-5	ALUMINUM	SEE MANUFACTURER'S SHOP DRAWINGS		
H	3'-0" x 7'-0" x 1-3/4"	GLASS & ALUMINUM SEE SHEET A-5	ALUMINUM	SEE MANUFACTURER'S SHOP DRAWINGS		
J	3'-0" x 7'-0" x 1-3/4"	HOLLOW METAL	HOLLOW METAL	8/A1	8/A1	PUSH BAR EXIT DEVICE

3/32" = 1'-0" ADC01

4 DOOR SCHEDULE – HOLLOW METAL DOORS & FRAMES

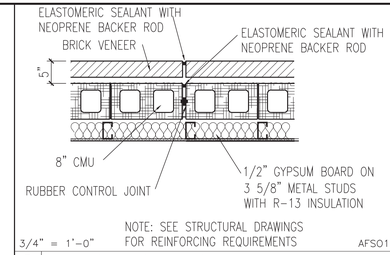

3/4" = 1'-0" AFS01

5 EXPANSION JOINT DETAIL

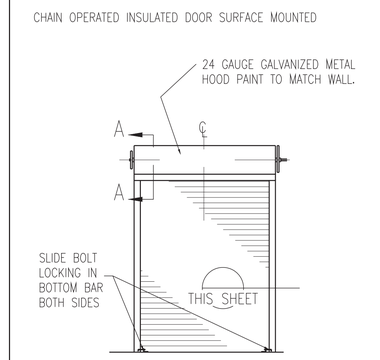

6 OVERHEAD DOOR ELEVATION

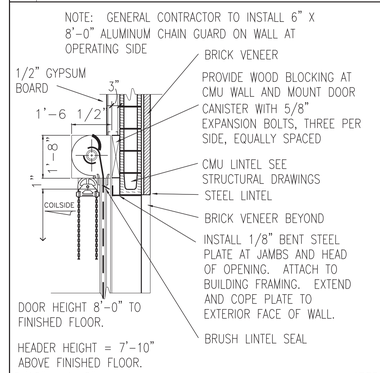

5/16" = 1'-0" ADS01

7 OVERHEAD DELIVERY DOOR (A)

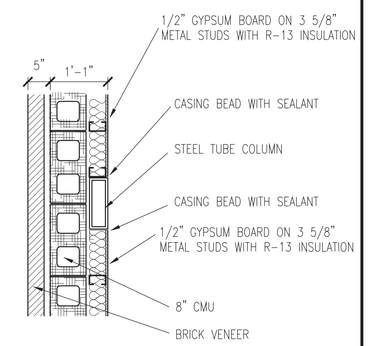

3/4" = 1'-0" AFS0265w2

9 REAR GIRDER LINE COLUMN

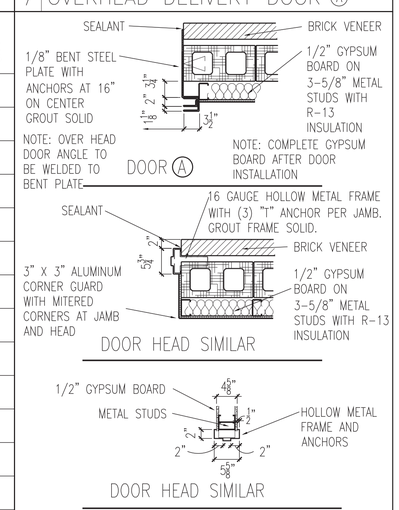

3/4" = 1'-0" ADS02

8 JAMB DETAILS

George W Callow
Digitally signed by George W Callow
Date: 2020.05.21 08:14:30 -05'00'

REVISIONS
1 2 3 4 5 6

AutoZone Store No. 6890
1593 N. MAIN ST.
LILLINGTON, NC 27546

FLOOR PLAN / DOOR SCHEDULE / WALL DETAILS

Architect: George Callow
123 South Front Street
Memphis, Tennessee 38103
TEL: 901-495-8706 FAX: (901) 495-8969

For Bidding & Contractor Information Contact:
Dodge Data & Analytics, Tel. 413-930-4215
Cindy.searcy@construction.com

GEORGE W. CALLOW REGISTERED ARCHITECT 5064 NORTH CAROLINA MEMPHIS, TN

05/06/20

65W2-R

A-1

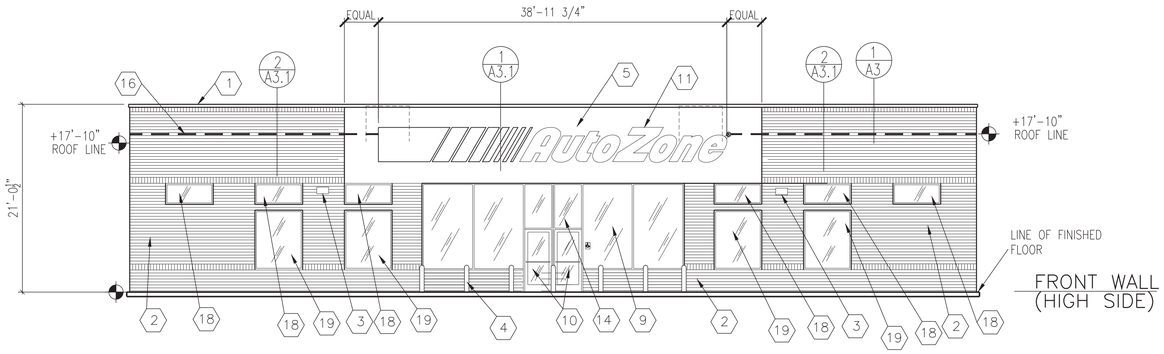

FRONT WALL (HIGH SIDE)

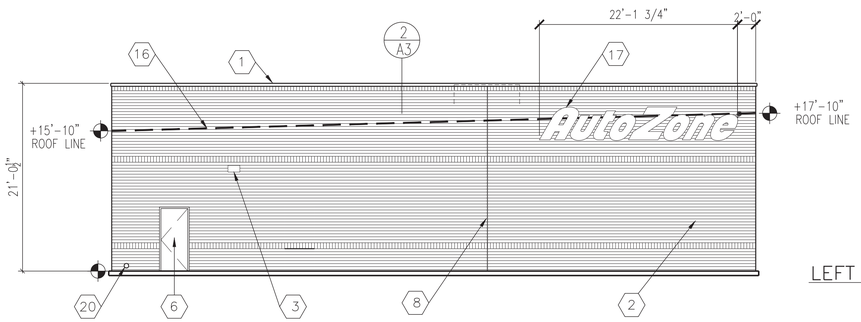

LEFT SIDE WALL

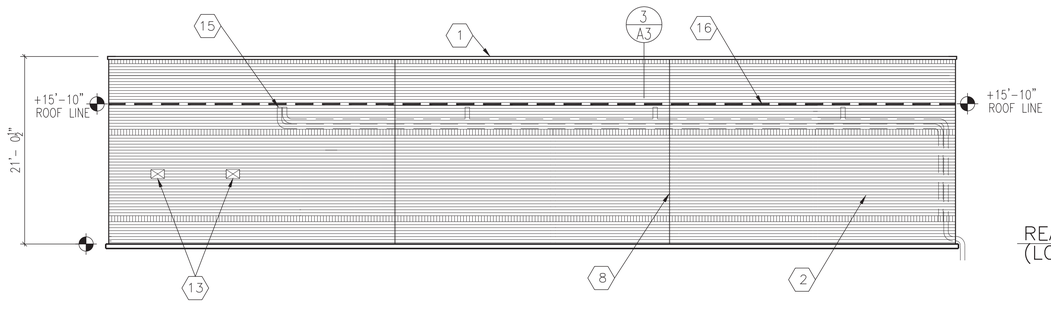

REAR WALL (LOW SIDE)

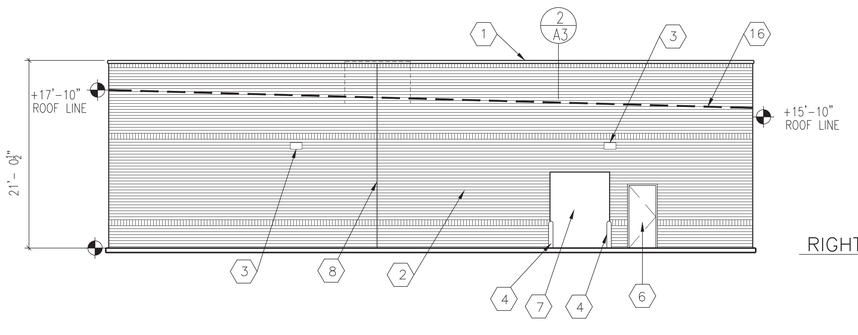

RIGHT SIDE WALL

1/8" = 1'-0"

1 EXTERIOR ELEVATIONS

George W Callow

Digitally signed by George W Callow
Date: 2020.05.21 08:15:28 -05'00'

J.B.H. = JOIST BEARING HEIGHT

1. TWO PIECE COMPRESSION TRIM SEE DETAIL 4/A6
2. BRICK VENEER UNITS SEE PAINT DETAIL SCHEME THIS SHEET
3. WALL MOUNTED LIGHT FIXTURE
4. PIPE GUARD WITH RED SLEEVE
5. MFG. WHITE EXTERIOR INSULATED FINISH – PAINT WHITE
6. PAINT MAN DOOR RED & METAL FRAMES BLACK
7. DO NOT PAINT OVERHEAD DOOR PAINT ANGLES BLACK
8. EXPANSION JOINT
9. ALUMINUM STOREFRONT – RED KYNAR FINISH
10. GLASS AND ALUMINUM DOORS – CLEAR ANODIZED FINISH
11. FRONT WALL SIGN – 46" L.S. CHANNEL LETTERS
12. NOT USED
13. TOILET WALL VENTS PAINT TO MATCH WALL
14. STORE ADDRESS – 6" WHITE REFLECTIVE NUMBERS
15. INTERNAL ROOF DRAIN
16. ROOF LINE SEE STRUCTURAL DRAWINGS FOR DETAILS
17. LEFT SIDE WALL SIGN – 44" AZO CHANNEL LETTERS
18. CLERESTORY WINDOW – EVERGREEN GLASS
19. FAUX WINDOW – OPAQUE BLACK GLASS
20. ROOF DRAIN EXIT

AWN01W

2 ELEVATION KEY NOTES

NOTE: CENTER ALL WALL SIGNAGE VERTICALLY ON THE PAINTED ORANGE STRIPE OR BETWEEN THE TOP TWO BRICK SOLDIER COURSES. PAINT ORANGE STRIPE TO WITHIN 2' OF WALL SIGN. DO NOT PAINT ORANGE STRIPE BEHIND SIGN.

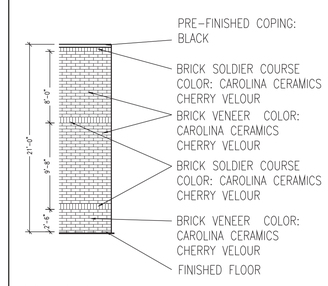

1/8" = 1'-0" AWE01

3 EXTERIOR WALL COLOR SCHEME

GENERAL NOTES:

1. REFER TO SECTION 09900 OF THE SPECIFICATIONS FOR PAINT AND EXTERIOR COATINGS. ALL COLORS ARE BY SHERWIN-WILLIAMS PAINT COMPANY.
2. PAINT RESTROOM WALL VENTS TO MATCH THE ADJACENT WALL COLOR.
3. SEALANT AT EXPANSION JOINTS TO MATCH ADJACENT WALL COLOR.
4. ALL MASONRY JOINTS TO BE CONCAVE TOOLED.

4 GENERAL NOTES

SIGNAGE NOTES:

1. AUTOZONE'S SIGN VENDOR WILL FURNISH AND INSTALL ALL SIGNS UNLESS OTHERWISE SPECIFICALLY NOTED ON THE DRAWINGS. WALL SIGNS TO BE INSTALLED ON SURFACES THAT ARE FURNISHED AND PREPARED BY GENERAL CONTRACTOR.
2. SIGN INSTALLER SHALL OBTAIN SIGN PERMITS AND INSTALL ALL FREESTANDING SIGNS AND THEIR FOUNDATIONS UNLESS NOTED OTHERWISE. GENERAL CONTRACTOR SHALL INSURE SIGN LOCATION IS TO GRADE AND SHALL MARK WHERE SIGN IS TO BE LOCATED.
3. GENERAL CONTRACTOR IS RESPONSIBLE FOR INSTALLATION OF PRIMARY ELECTRICAL, AND FINAL ELECTRICAL HOOK-UP. SEE "SN" SHEETS FOR ADDITIONAL INFORMATION.
4. SEE SHEET E3 FOR LOCATIONS OF J-BOXES TERMINATING EACH WALL SIGN CIRCUIT.

3/32" = 1'-0" AWN02

5 SIGNAGE NOTES – BUILDING

REVISIONS

1	REV1	2	REV2
3	REV3	4	REV4
5	REV5	6	REV6

AutoZone Store No. 6890
1593 N. MAIN ST.
LILLINGTON, NC 27546

EXTERIOR ELEVATIONS AND NOTES

Architect: George Callow
123 South Front Street
Memphis, Tennessee 38103
TEL: 901-495-8706 FAX: (901) 495-8969

For Bidding & Contractor Information Contact:
Dodge Data & Analytics, Tel. 413-930-4215
Cindy.searcy@construction.com

GEORGE W. CALLOW REGISTERED ARCHITECT 5064 NORTH CAROLINA MEMPHIS, TN

05/06/20

65W2-R

A-2

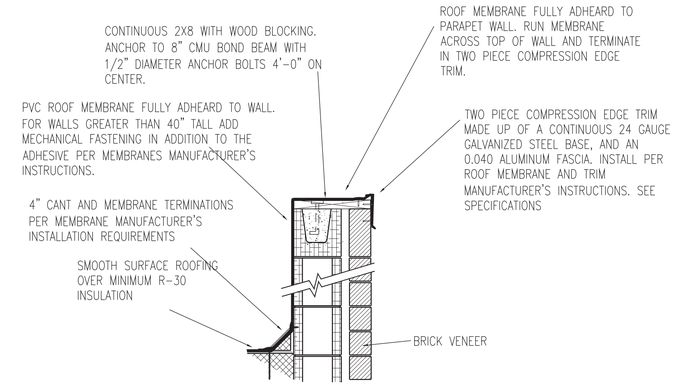

1" = 1'-0" AWS05

4 PARAPET DETAIL

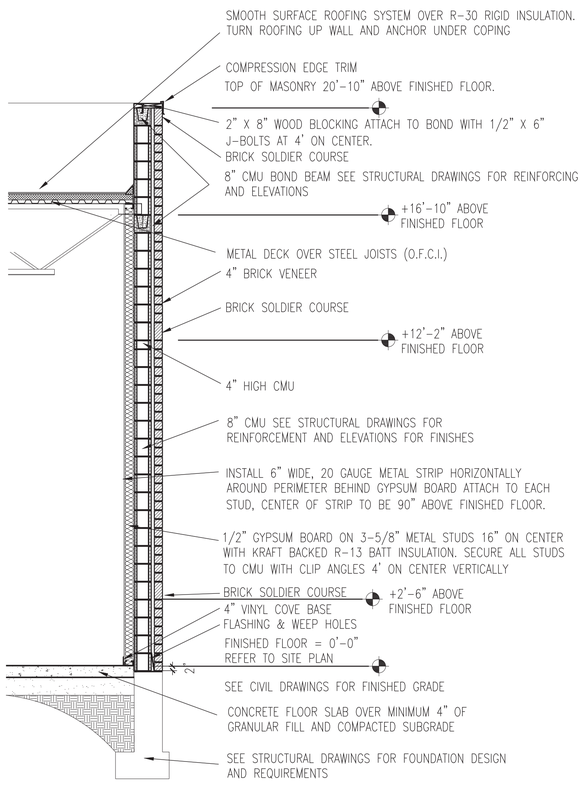

3/8" = 1'-0" AWS01

1 WALL SECTION – HIGH SIDE

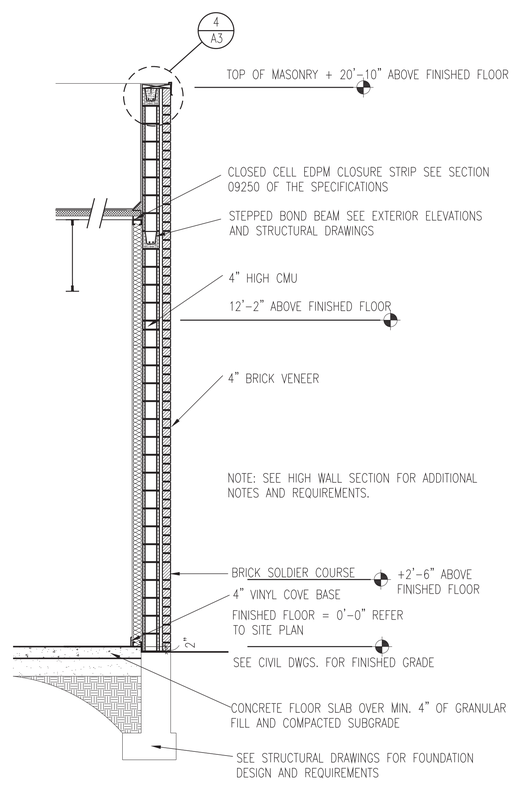

3/8" = 1'-0" AWS02

2 WALL SECTION END WALL

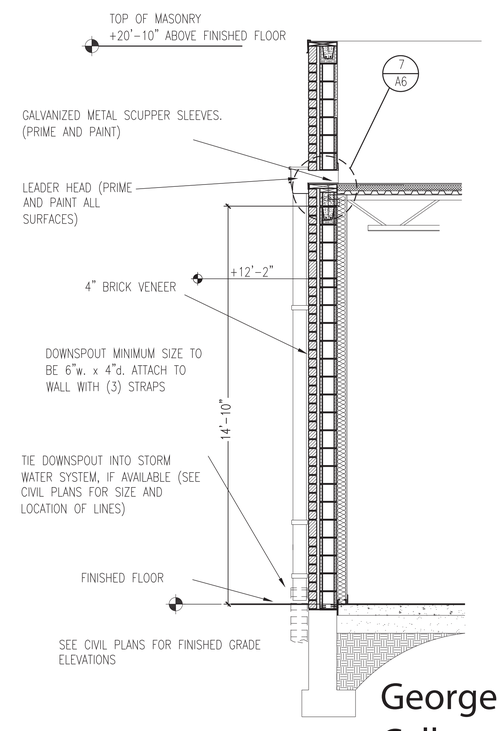

3/8" = 1'-0" AWS03

3 WALL SECTION LOW SIDE

George W Callow

Digitally signed by George W Callow
Date: 2020.05.21 08:16:39 -05'00'

REVISIONS	
1	
2	
3	
4	
5	
6	

AutoZone Store No. 6890
1593 N. MAIN ST.
LILLINGTON, NC 27546

EXTERIOR WALL SECTIONS

Architect: George Callow
123 South Front Street
Memphis, Tennessee 38103
TEL: 901-495-8706 FAX: (901) 495-8969

For Bidding & Contractor Information Contact:
Dodge Data & Analytics, Tel. 413-930-4215
Cindy.searcy@construction.com

GEORGE W. CALLOW REGISTERED ARCHITECT 5064 NORTH CAROLINA MEMPHIS, TN

05/06/20

65W2-R

A-3

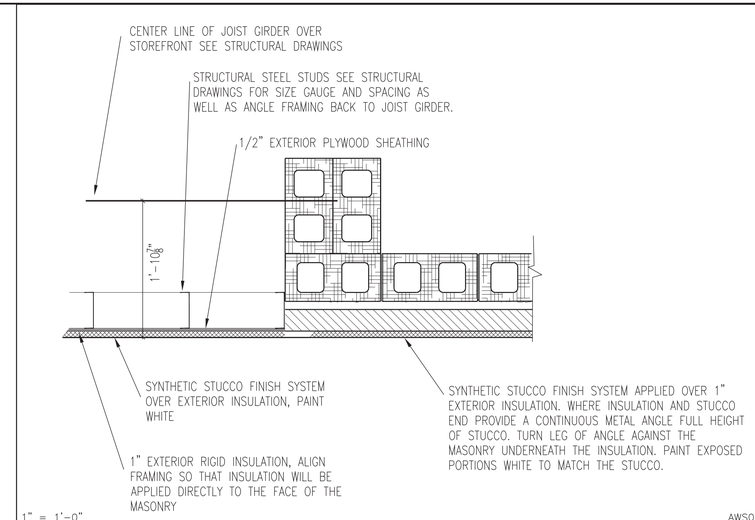

1" = 1'-0" AWS09W

4 EIFS DETAIL

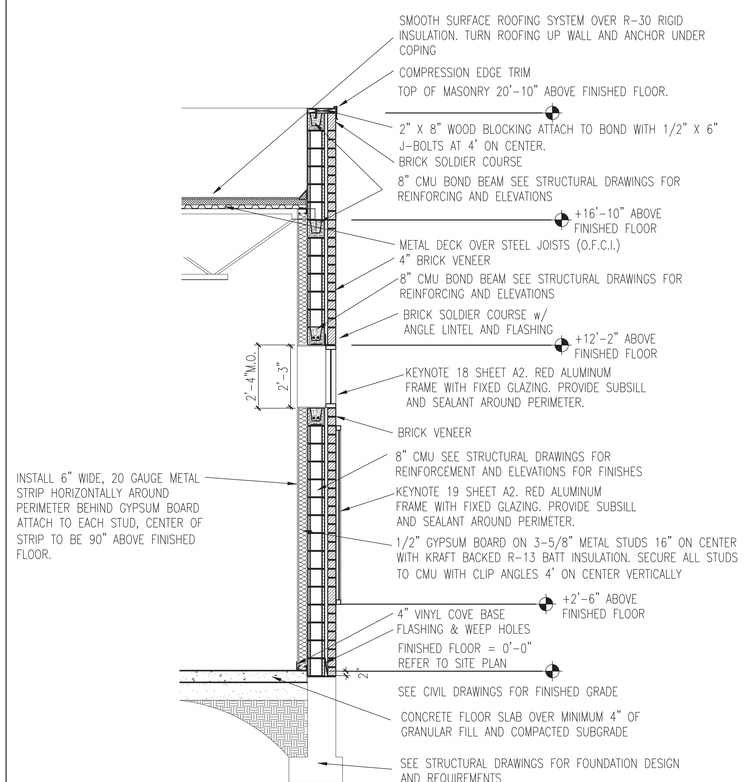

3/8" = 1'-0" AWS07W

1 WALL SECTION – HIGH SIDE

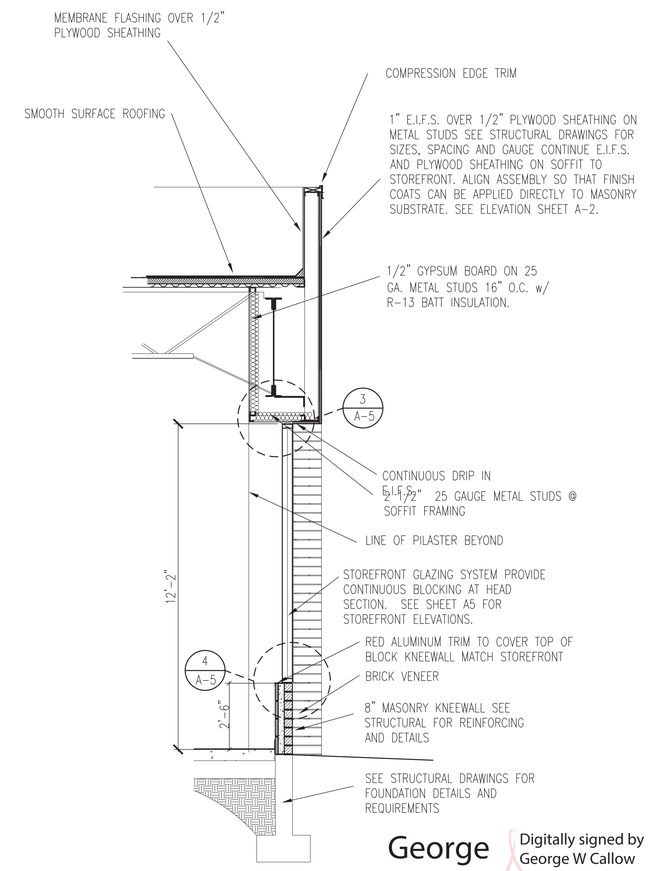

3/8" = 1'-0" AWS04W

1 WALL SECTION HIGH SIDE (storefront)

George W Callow Digitally signed by George W Callow Date: 2020.05.21 08:16:04 -05'00'

REVISIONS			
1	REV1	4	REV4
2	REV2	5	REV5
3	REV3	6	REV6

AutoZone Store No. 6890
1593 N. MAIN ST.
LILLINGTON, NC 27546
EXTERIOR WALL SECTIONS

Architect: George Callow
123 South Front Street
Memphis, Tennessee 38103
TEL: 901-495-8706 FAX: (901) 495-8969
For Bidding & Contractor Information Contact:
Dodge Data & Analytics, Tel. 413-930-4215
Cindy.searcy@construction.com

GEORGE W. CALLOW REGISTERED ARCHITECT 5064 NORTH CAROLINA MEMPHIS, TN

05/06/20

65W2-R

A-3.1

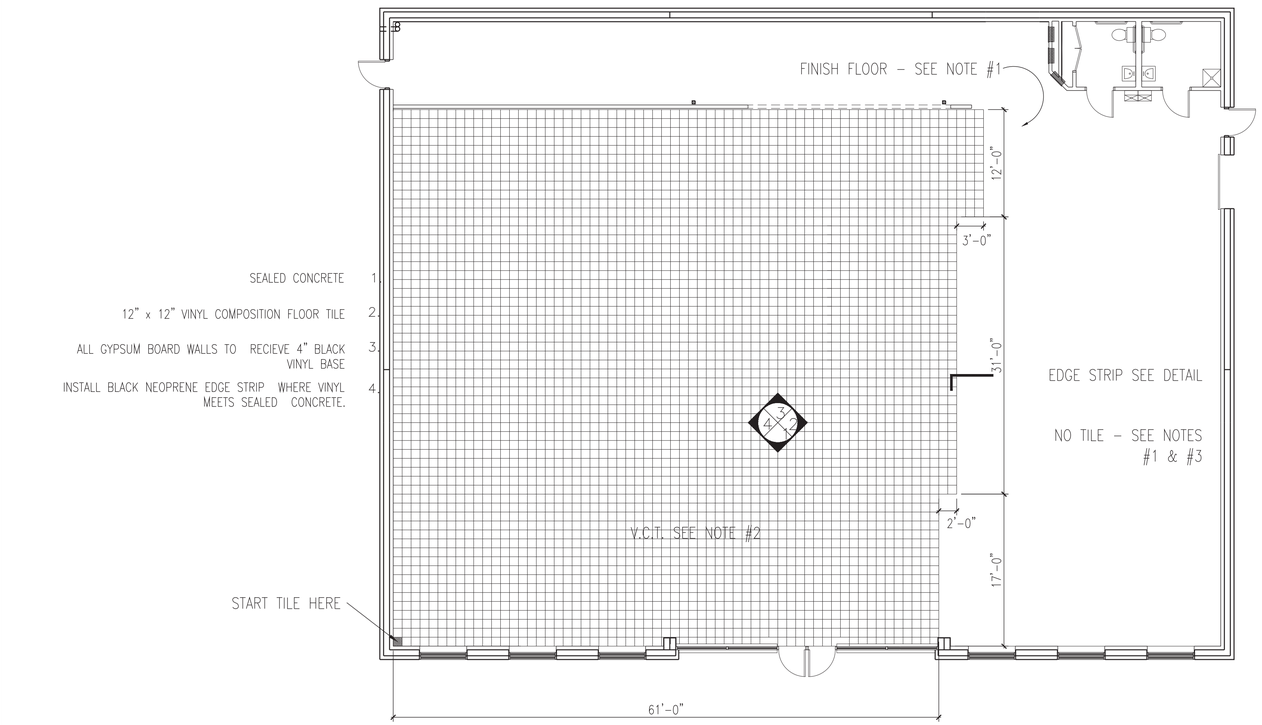

1/8" = 1'-0"

1 INTERIOR TILE PLAN

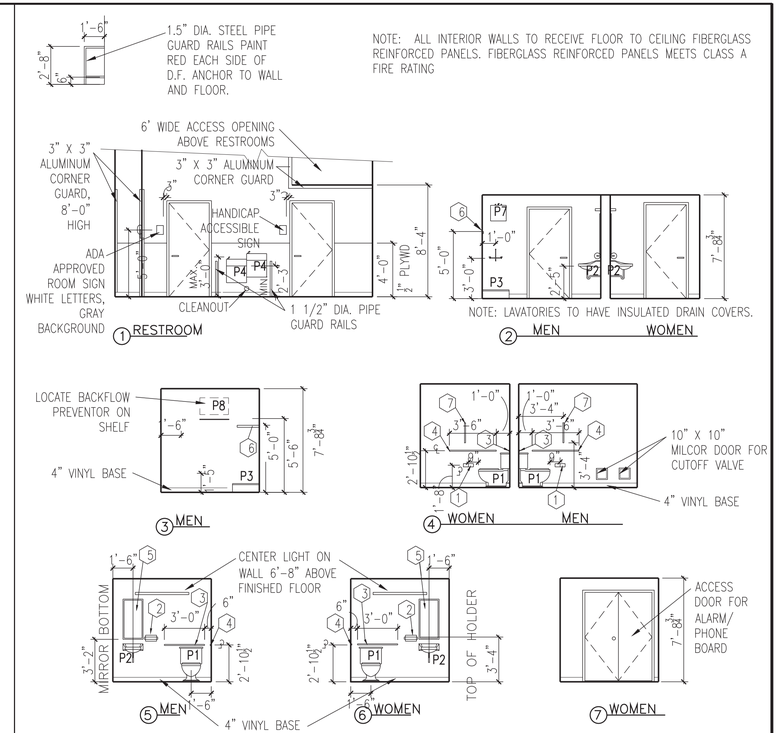

3/16" = 1'-0" ABE0165W2R

6 INTERIOR BATHROOM ELEVATIONS

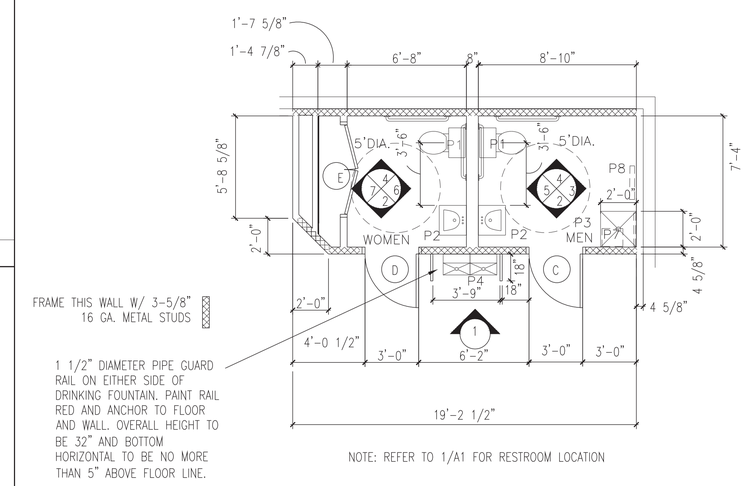

1/4" = 1'-0" APB0165W2R

7 RESTROOM PLAN

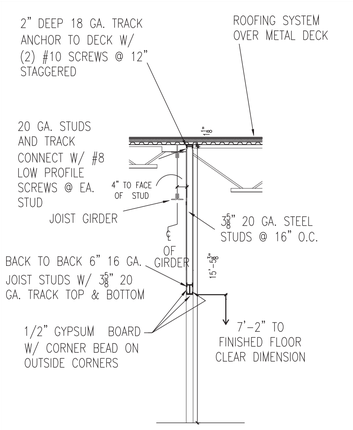

1/4" = 1'-0" AIS0265W2

2 CURTAIN WALL AT GIRDER

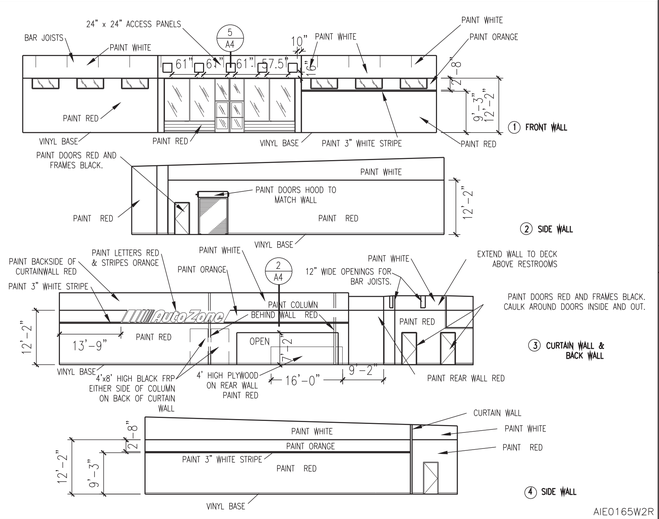

1/16" = 1'-0" AIE0165W2R

3 INTERIOR ELEVATIONS

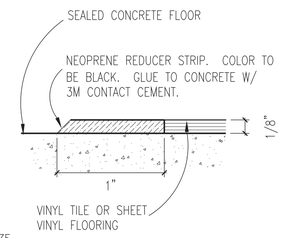

FULL SIZE AIS01

4 TRANSITION STRIP

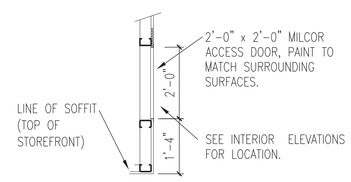

1/2" = 1'-0" AIS03

5 ACCESS PANEL SECTION

FIXTURES				ACCESSORIES			
P1	TOILET	P5	NOT USED	1	TOILET PAPER HOLDER	4	GRAB BAR 42" LONG 1-1/2" DIA.
P2	LAVATORY	P6	NOT USED	2	PAPER TOWEL HOLDER	5	MIRROR – 18"x36" H. FRAMED GLASS
P3	MOP SINK	P7	WATER HEATER	3	GRAB BAR 36" LONG 1-1/2" DIA.	6	MOP HOLDER
P4	ELECTRIC DRINKING FOUNTAIN	P8	BACKFLOW PREVENTOR			7	GRAB BAR 18" LONG 1-1/2" DIA.

1/8" = 1'-0" ABL01

8 RESTROOM LEGEND

George W Callow

Digitally signed by George W Callow
Date: 2020.05.21 08:17:31 -05'00'

REVISIONS

1	REV1	2	REV2	3	REV3
4	REV4	5	REV5	6	REV6

AutoZone Store No. 6890
1593 N. MAIN ST.
LILLINGTON, NC 27546

TILE PLAN / INTERIOR ELEVATIONS / RESTROOM PLAN & ELEVATIONS

Architect: George Callow
123 South Front Street
Memphis, Tennessee 38103
TEL. 901-495-8706 FAX: (901) 495-8969

For Bidding & Contractor Information Contact:
Dodge Data & Analytics. Tel. 413-930-4215
Cindy.searcy@construction.com

GEORGE W. CALLOW REGISTERED ARCHITECT 5064 NORTH CAROLINA MEMPHIS, TN

05/06/20

65W2-R

A-4

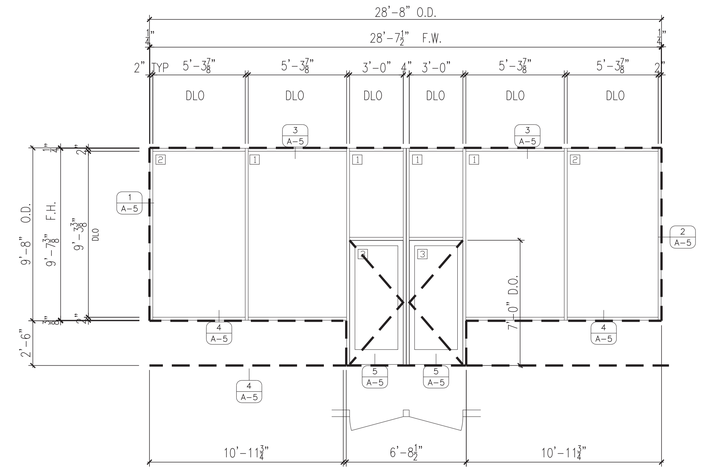

ELEVATION

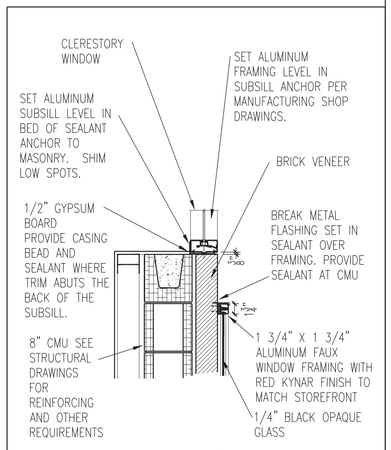

ANCHOR ENTIRE PERIMETER OF FRAMING TO MASONRY PER FRAMING MANUFACTURER'S SHOP DRAWINGS. PROVIDE SEALANT AROUND ENTIRE PERIMETER OF WINDOW. JAMB AND SILL SECTIONS SIMILAR TO HEAD SECTION.

1" = 1'-0" ASS0665w2

8 FAUX WINDOW HEAD DETAIL

GLAZING SCHEDULE

1. 1/4" TEMPERED
2. 1/4" FLOAT
3. 1/4" TEMPERED

FRAMING / DOOR FINISH

DOORS – CLEAR ANODIZED

FRAMING – 2"x 4 1/2" ALUMINUM PAINTED RED PPG UC45282XL w/ CLEAR TOP COAT

1/4" = 1'-0" ASE0165w2R

7 STOREFRONT ELEVATION

George W Callow

Digitally signed by George W Callow
Date: 2020.05.21 08:18:13 -05'00'

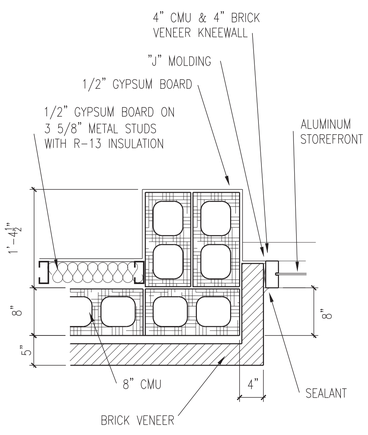

1" = 1'-0" ASS01W

1 JAMB DETAIL

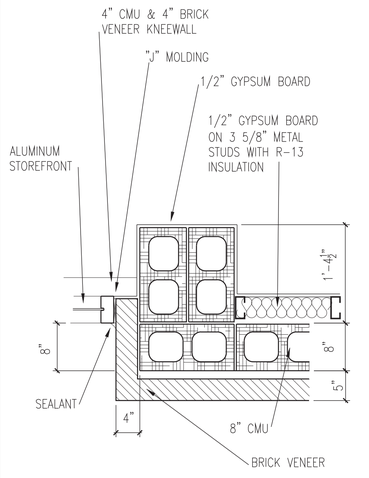

1" = 1'-0" ASS02W

2 JAMB DETAIL

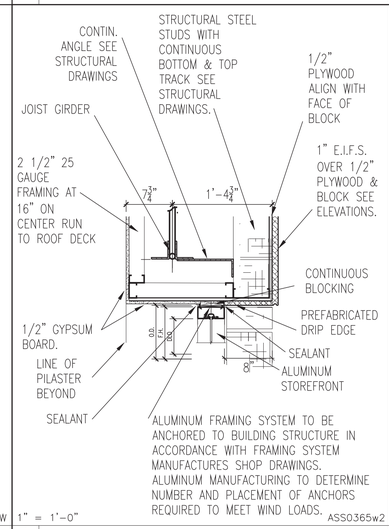

1" = 1'-0" ASS0365w2

3 HEAD SECTION

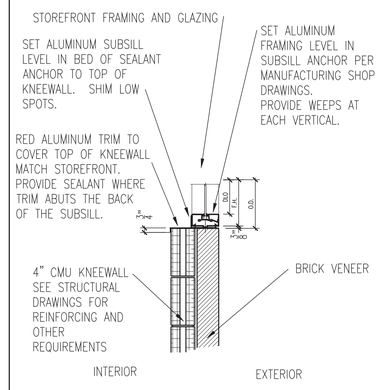

1" = 1'-0" ASS04

4 SILL DETAIL / KNEEWALL

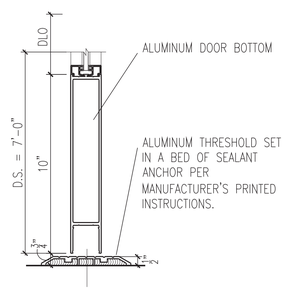

3" = 1'-0" ASS05

5 THRESHOLD DETAIL

GENERAL NOTES

1. STOREFRONT SHALL BE AS MANUFACTURED BY EITHER VISTAWALL ARCHITECTURAL PRODUCTS, YKK, OR U.S. ALUMINUM PRODUCTS AND SHALL BE 2" WIDE BY 4 1/2" DEEP. IMPACT FRAMING SHALL BE 2 1/2" WIDE BY 5" DEEP.

2. CONTRACTOR SHALL FIELD VERIFY ALL DIMENSIONS PRIOR TO BEGINNING FABRICATION OF THE FRAMING MEMBERS OR ORDERING GLASS. INSTALLATION SHALL CONFORM TO ALUMINUM MANUFACTURER'S PRINTED SHOP DRAWINGS AND INSTRUCTIONS.

3. STEEL CLIPS AND ANCHORS SHALL BE HOT ROLLED STEEL A-36 ALLOY WITH A MINIMUM OF ONE COAT OF ZINC CHROMATE PRIMER.

4. ALL FASTENERS SHALL BE ZINC OR CADMIUM PLATED OR NON-MAGNETIC STAINLESS STEEL. ALL FASTENERS IN EXPOSED AREAS ARE TO BE PAINTED TO MATCH FINISH OF ALUMINUM.

5. FINISH OF ALUMINUM CLADDING AND FORMED ALUMINUM SHAPES SHALL MATCH THE FINISH OF ADJACENT EXTRUDED ALUMINUM.

6. MITERING AND NOTCHING OF INTERIOR TRIM IS TO BE DONE IN THE FIELD.

1" = 1'-0" ASN01

6 STOREFRONT NOTES

REVISIONS

1	4
2	5
3	6

AutoZone Store No. 6890
1593 N. MAIN ST.
LILLINGTON, NC 27546

STOREFRONT / VESTIBULE PLAN / DETAILS

Architect: George Callow
123 South Front Street
Memphis, Tennessee 38103
TEL: 901-495-8706 FAX: (901) 495-8969

For Bidding & Contractor Information Contact:
Dodge Data & Analytics, Tel. 413-930-4215
Cindy.searcy@construction.com

GEORGE W. CALLOW REGISTERED ARCHITECT 5064 NORTH CAROLINA MEMPHIS, TN

05/06/20

65W2-R

A-5

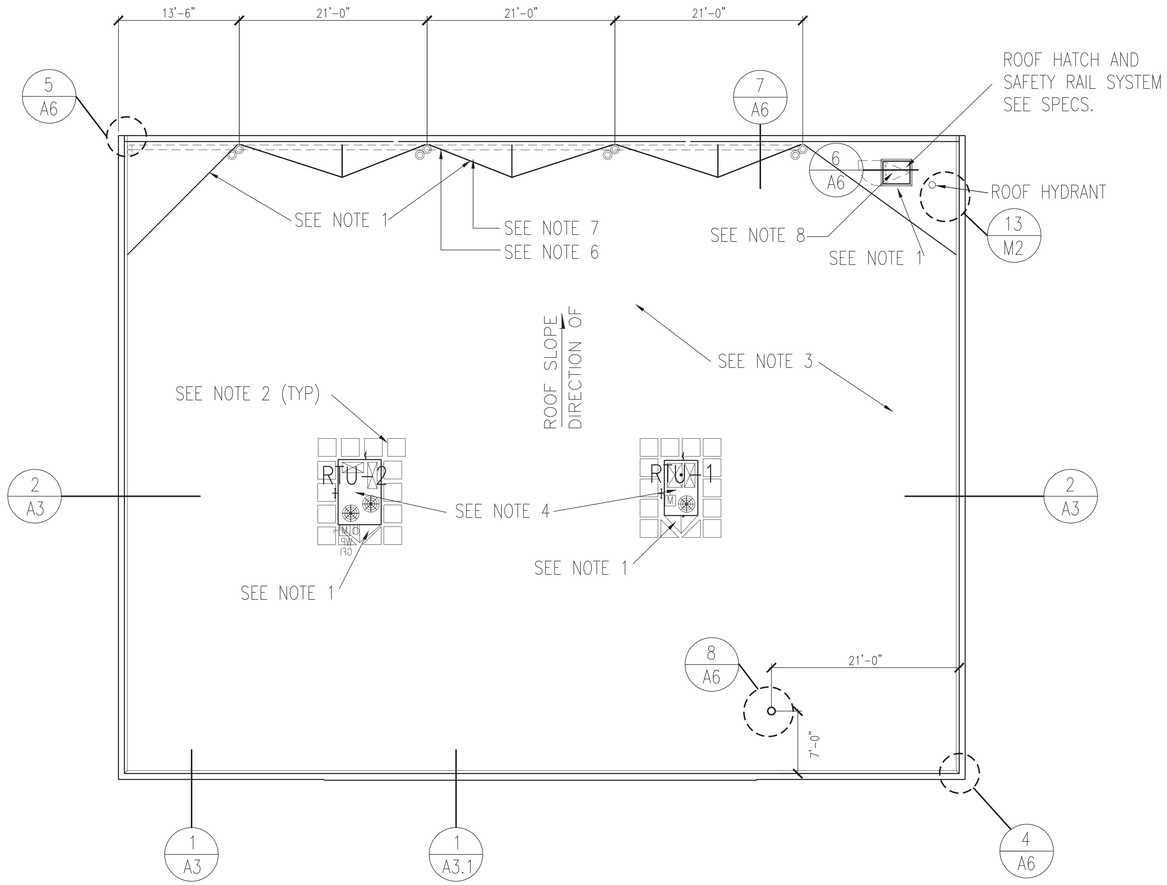

1/8" = 1'-0"

1 ROOF PLAN

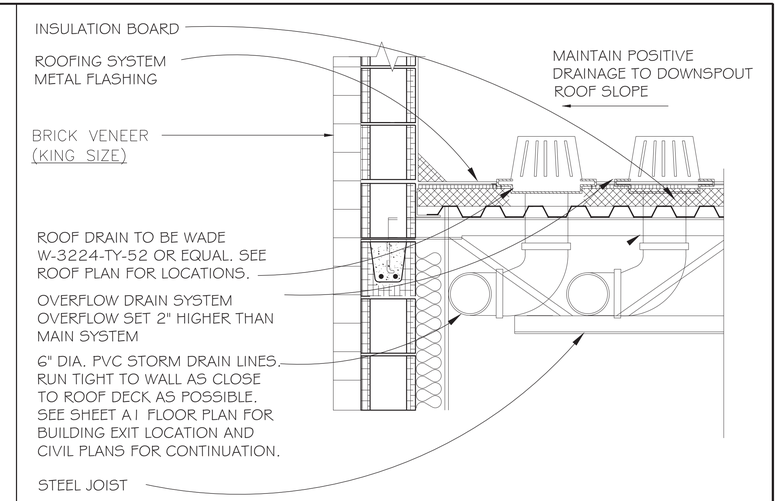

1" = 1'-0" ARS01

7 ROOF EDGE DETAIL AT LOW SIDE

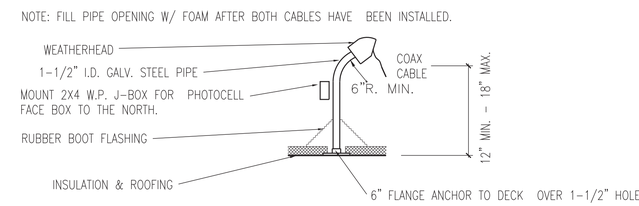

3/4" = 1'-0" ARS03

8 SATELLITE COAX

1. ALL CRICKETS TO BE 3" HIGH AT THE CENTER AND LOCATED AT THE HIGH SIDE OF ANY ROOF OPENING. SLOPE DOWNWARD TO EDGE OF ROOF OPENINGS OR DRAINS.

2. ALL ROOF WALKPADS (24" X 24") ARE TO BE WITHIN 2" OF THE VERTICAL FACES OF THE ROOFTOP UNIT. SPACING BETWEEN THE PADS IS TO BE 6".

3. REFER TO SPECIFICATIONS FOR SMOOTH SURFACE ROOFING SYSTEM, PROVIDE CONTINUOUS 4" FIBER CANT STRIP AT VERTICAL INTERSECTIONS IF REQUIRED BY ROOFING SYSTEM.

4. REFER TO STRUCTURAL DRAWINGS FOR ROOF FRAMING PLAN TO DETERMINE LOCATION OF ROOF TOP UNITS (RTU).

5. HVAC ROOF CURBS SHALL BE FURNISHED BY OWNER AND INSTALLED BY CONTRACTOR. CONTRACTOR SHALL PROVIDE ALL FLASHING.

6. NOT USED

7. CONNECT ROOF DRAIN TO UNDERGROUND DRAINAGE SYSTEM OR IF NONE AVAILABLE, PROVIDE SPLASH BLOCKS WITH POSITIVE DRAINAGE AWAY FROM BUILDING.

8. ROOF HATCH WITH LADDER BELOW.

1/4" = 1'-0" ARN01

2 ROOF PLAN NOTES

TOTAL ROOF AREA = 7093 SQ. FT.
ROOF SLOPE = 3 PERCENT
DESIGN RAINFALL = 5 INCHES PER HOUR
SEAMLESS 5" GUTTER IS RECTANGULAR WITH AN AREA OF 20 SQ. IN. AND IS EQUIVALENT TO A 6" DIAMETER PIPE WITH AN AREA OF 18.85 SQ. IN. MAXIMUM HORIZONTAL PROJECTED ROOF AREA FOR THIS GUTTER IS 7310 SQ. FT.
DIMENSIONS OF DOWNSPOUTS, LEADER BOX OPENING AND OVERFLOW SCUPPERS ARE 4" x 6" WITH AN AREA OF 24 SQ. IN. AND IS EQUIVALENT TO A 5" DIAMETER PIPE WITH AN AREA OF 19.64 SQ. IN. MAXIMUM ALLOWABLE ROOF AREA FOR THIS DOWNSPOUT IS 6920 SQ. FT.
MINIMUM NUMBER OF DOWNSPOUTS REQUIRED IS 7093 / 6920 OR 1.025, FOUR ARE PROVIDED WITH LEADER BOXES AND OVERFLOW SCUPPERS.

1/2" = 1'-0" ARN265W2

3 RAINWATER CALCULATIONS

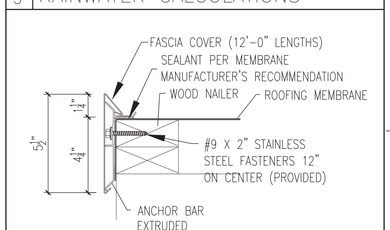

3" = 1'-0" ARI01

4 ROOF EDGE DETAIL

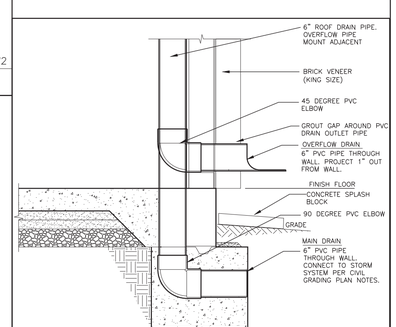

5 ROOF DRAIN DETAIL

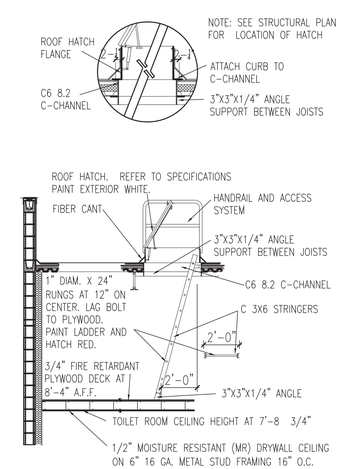

1/4" = 1'-0" ARS02

6 ROOF HATCH DETAIL

George W Callow
Digitally signed by George W Callow
Date: 2020.05.21 08:18:47 -05'00'

REVISIONS	
1	
2	
3	
4	
5	
6	

AutoZone Store No. 6890
1593 N. MAIN ST.
LILLINGTON, NC 27546
ROOF PLAN / DETAILS

Architect: George Callow
123 South Front Street
Memphis, Tennessee 38103
TEL: 901-495-8706 FAX: (901) 495-8969
For Bidding & Contractor Information Contact:
Dodge Data & Analytics, Tel. 413-930-4215
Cindy.searcy@construction.com

GEORGE W. CALLOW REGISTERED ARCHITECT 5064 NORTH CAROLINA MEMPHIS, TN

05/06/20

65W2-R

A-6

GENERAL

1. THESE NOTES ARE GENERAL REQUIREMENTS. SEE SPECIFICATIONS FOR ADDITIONAL REQUIREMENTS.
2. UNLESS SHOWN OR NOTED OTHERWISE ON THE CONTRACT DRAWINGS OR IN THE SPECIFICATIONS, THE FOLLOWING NOTES SHALL APPLY TO THE MATERIALS LISTED HEREINAFTER FOR USE ON THIS PROJECT.
3. IF MATERIALS, QUANTITIES, STRENGTHS OR SIZES INDICATED BY THE DRAWINGS OR SPECIFICATIONS ARE NOT IN AGREEMENT WITH THESE NOTES, THE CONTRACTOR SHALL CONTACT THE ARCHITECT/ENGINEER FOR CLARIFICATION.
4. TYPICAL DETAILS MAY NOT NECESSARILY BE CUT ON THE PLANS, BUT APPLY UNLESS NOTED OTHERWISE.
5. SHOP DRAWINGS PREPARED BY SUPPLIERS AND SUBCONTRACTORS SHALL BE REVIEWED AND APPROVED BY THE GENERAL CONTRACTOR PRIOR TO SUBMISSION TO THE ENGINEER/ARCHITECT.
6. SHOP DRAWINGS PREPARED BY THE CONTRACTORS, SUPPLIERS, ETC., WILL BE REVIEWED BY THE ENGINEER/ARCHITECT ONLY FOR CONFORMANCE WITH DESIGN CONCEPT. NO WORK AFFECTED BY THE SHOP DRAWINGS SHALL BE STARTED WITHOUT SUCH REVIEW.
7. THE GENERAL CONTRACTOR SHALL COORDINATE ALL REVISIONS, CORRECTIONS, AND COMMENTS INDICATED ON THE SHOP DRAWINGS BY THE ARCHITECT/ENGINEER.
8. ALL DIMENSIONS AND ELEVATIONS SHOWN ON THE STRUCTURAL DRAWINGS SHALL BE VERIFIED BY THE CONTRACTOR AND SHALL CONFORM TO THOSE SHOWN ON THE ARCHITECTURAL DRAWINGS.
9. THE STRUCTURAL CONTRACT DOCUMENTS DO NOT INDICATE THE METHOD OF CONSTRUCTION. THE CONTRACTOR SHALL SUPERVISE AND DIRECT THE WORK AND HE SHALL BE SOLELY RESPONSIBLE FOR ALL CONSTRUCTION MEANS, METHODS, TECHNIQUES, SEQUENCES AND PROCEDURES. OBSERVATION VISITS TO THE SITE BY THE ENGINEER SHALL NOT INCLUDE INSPECTIONS OF THE PROTECTIVE MEASURES OR THE CONSTRUCTION PROCEDURES.
10. ANY SUPPORT SERVICES PERFORMED BY THE ENGINEER DURING CONSTRUCTION SHALL BE DISTINGUISHED FROM CONTINUOUS AND DETAILED INSPECTION SERVICES WHICH ARE FURNISHED BY OTHERS. THESE SUPPORT SERVICES PERFORMED BY THE ENGINEER ARE SOLELY FOR THE PURPOSE OF ASSISTING IN QUALITY CONTROL AND IN ACHIEVING CONFORMANCE WITH THE CONSTRUCTION DOCUMENTS. THEY DO NOT GUARANTEE CONTRACTOR'S PERFORMANCE AND SHALL NOT BE CONSTRUED AS SUPERVISION OF CONSTRUCTION.
11. ALL STRUCTURES ARE DESIGNED TO BE STABLE AND SELF-SUPPORTING AT THE COMPLETION OF CONSTRUCTION. IT IS THE CONTRACTOR'S SOLE RESPONSIBILITY TO DETERMINE THE ERECTION PROCEDURE AND SEQUENCE TO ENSURE THE STABILITY AND SAFETY OF THE STRUCTURE AND ITS COMPONENT PARTS, AND THE ADEQUACY OF TEMPORARY OR INCOMPLETE CONNECTIONS DURING CONSTRUCTION. THIS INCLUDES, BUT IS NOT LIMITED TO, THE ADDITION OF WHATEVER TEMPORARY BRACING, GUYS OR TIE-DOWNS THAT MAY BE NECESSARY. SUCH MATERIAL IS NOT INDICATED ON THE DRAWINGS AND, IF PROVIDED, SHALL BE REMOVED, AS CONDITIONS PERMIT AND REMAIN THE PROPERTY OF THE CONTRACTOR.
12. ALL MATERIALS AND EQUIPMENT FURNISHED WILL BE NEW AND OF GOOD QUALITY, FREE FROM FAULTS AND DEFECTS AND IN CONFORMANCE WITH THE CONTRACT DOCUMENTS. ALL SUBSTITUTIONS MUST BE PROPERLY APPROVED AND AUTHORIZED PRIOR TO INSTALLATION. THE CONTRACTOR SHALL FURNISH SATISFACTORY EVIDENCE AS TO THE KIND AND QUALITY OF MATERIALS AND EQUIPMENT BEING SUBSTITUTED.
13. THE CONTRACTOR SHALL BE RESPONSIBLE FOR INITIATING, MAINTAINING AND SUPERVISING ALL SAFETY PRECAUTIONS AND PROGRAMS IN CONNECTION WITH THE WORK.
14. COORDINATE WITH THE ARCHITECTURAL DRAWINGS AND SPECIFICATIONS FOR MISCELLANEOUS STEEL ITEMS, LINTELS, METAL PAN STAIRS, SIZE AND LOCATION OF FLOOR SLOPES, DEPRESSED AREAS, FINISH FILLS, CHAMFERS, GROOVES, RAILING SLEEVES, ROOF EDGES, INSERTS, ETC.
15. COORDINATE WITH CIVIL, MECHANICAL AND ELECTRICAL DRAWINGS FOR PIPE SLEEVES, FLOOR DRAINS, ROOF DRAINS, INSERTS, HANGERS, TRENCHES, PITS, WALL AND SLAB OPENINGS, CONDUIT RUNS IN WALLS AND SLABS, SIZE AND LOCATION OF MACHINE OR EQUIPMENT SUPPORTS, BASE AND ANCHOR BOLTS, RAILING, ETC.
16. COORDINATE WITH SITE, ARCHITECTURAL, ELECTRICAL, MECHANICAL, AND CIVIL DRAWINGS FOR RETAINING WALLS, PADS, PAVEMENT AND OTHER SITE STRUCTURES.
17. EARTHWORK, FOUNDATION DRAINS, WATERPROOFING, PERIMETER INSULATION, MASONRY AND OTHER REQUIRED NON-STRUCTURAL ITEMS ARE NOT SHOWN ON THE STRUCTURAL DRAWINGS. COORDINATE WITH CIVIL/SITE AND ARCHITECTURAL DRAWINGS.

GOVERNING CODES AND SPECIFICATIONS

NCBC	-NORTH CAROLINA BUILDING CODE, 2018 EDITION (IBC 2015)
ASCE 7	-MINIMUM DESIGN LOADS FOR BUILDINGS AND OTHER STRUCTURES, 2010 EDITION
ACI 318	-BUILDING CODE REQUIREMENTS FOR STRUCTURAL CONCRETE, 2014 EDITION
ACI 301	-SPECIFICATIONS FOR STRUCTURAL CONCRETE, 2010 EDITION
ACI 305R	-HOT WEATHER CONCRETING, 2010 EDITION
ACI 306R	-COLD WEATHER CONCRETING, 2010 EDITION
ACI SP-66	-ACI DETAILING MANUAL, 2004
ACI 530	-BUILDING CODE REQUIREMENTS FOR MASONRY STRUCTURES, 2013 EDITION
ACI 530.1	-SPECIFICATIONS FOR MASONRY STRUCTURES, 2013 EDITION
AISC 360	-STEEL CONSTRUCTION MANUAL, 14TH EDITION
AWS D1.1	-STRUCTURAL WELDING CODE - STEEL, 2010 EDITION
AWS D1.4	-STRUCTURAL WELDING CODE - REINFORCING STEEL, 2011 EDITION
SJI	-STANDARD SPECIFICATION, LOAD TABLES, AND WEIGHT TABLES FOR STEEL JOIST AND JOIST GIRDERS, FORTY-THIRD EDITION
SDI-RDDM	-STEEL DECK INSTITUTE ROOF DECK DESIGN MANUAL, FIRST EDITION
AISI S100	-NORTH AMERICAN SPECIFICATION FOR THE DESIGN OF COLD-FORMED STEEL STRUCTURAL MEMBERS, 2012 EDITION
AISI S200	-NORTH AMERICAN STANDARD FOR COLD-FORMED STEEL FRAMING - GENERAL PROVISIONS, 2012 EDITION
AISI S210	-NORTH AMERICAN STANDARD FOR COLD-FORMED STEEL FRAMING - FLOOR AND ROOF SYSTEM DESIGN, 2007 EDITION (REAFFIRMED 2012)
AISI S211	-NORTH AMERICAN STANDARD FOR COLD-FORMED STEEL FRAMING - WALL STUD DESIGN, 2012 EDITION, INCLUDING SUPPLEMENT 1, DATED 2012 (REAFFIRMED 2012)

DESIGN LOADS

	UNIFORM (PSF)	CONCENTRATED (LBS)
1. LIVE LOADS: (REDUCIBLE PER GOVERNING CODE)		
a. ROOF	20	300
b. FIRST FLOOR (SLAB ON GRADE)	100	2,000

2. SNOW LOADS:	
a. GROUND SNOW LOAD, P_g	15 PSF
b. FLAT ROOF SNOW LOAD, P_f	10.5 PSF
c. SNOW EXPOSURE FACTOR, C_e	1.0
d. SNOW LOAD IMPORTANCE FACTOR, I_s	1.0
e. THERMAL FACTOR, C_t	1.0
3. WIND LOADS:	
a. ULTIMATE DESIGN WIND SPEED (3-SECOND GUST), MPH	120
b. RISK CATEGORY	II
c. WIND EXPOSURE	C
d. DESIGN WIND PRESSURE FOR COMPONENTS AND CLADDING SHALL BE COMPUTED PER GOVERNING BUILDING CODE USING EXPOSURE	C (SEE DIAGRAM ON SHEET S0.1)
e. INTERNAL PRESSURE COEFFICIENT (ENCLOSED)	+/- 0.18
4. EARTHQUAKE DESIGN DATA:	
a. OCCUPANCY RISK CATEGORY	II
b. SEISMIC IMPORTANCE FACTOR, I_e	1.0
c. MAPPED SPECTRAL RESPONSE ACCELERATIONS	S_S = 0.181g S_1 = 0.085g
d. SITE CLASS	D
e. DESIGN SPECTRAL RESPONSE ACCELERATIONS	S_{DS} = 0.193g S_{D1} = 0.137g
f. SEISMIC DESIGN CATEGORY	C
g. BASIC SEISMIC REINFORCING SYSTEM	INTERMEDIATE REINFORCED MASONRY
h. DESIGN BASE SHEAR	V = 15.4 KIPS
i. SEISMIC RESPONSE COEFFICIENT	CS = 0.055
j. RESPONSE MODIFICATION COEFFICIENT	R = 3.5
k. ANALYSIS PROCEDURE USED	EQUIVALENT LATERAL FORCE

FOUNDATIONS

1. FOUNDATION DESIGN IS BASED ON RECOMMENDATIONS IN THE GEOTECHNICAL REPORT NO. B1803403, PREPARED BY BRAUN INTERTEC CORP, DATED MAY 4, 2018. CONTRACTOR SHALL REVIEW GEOTECHNICAL REPORT PRIOR TO CONSTRUCTION.
2. FOUNDATIONS ARE DESIGNED TO BEAR ON UNDISTURBED NATURAL SOILS OR PROPERLY COMPACTED ENGINEERED FILL WITH A NET ALLOWABLE BEARING CAPACITY OF 2,000 PSF . (SEE GEOTECHNICAL REPORT.)
3. TOPSOIL, FILL, AND/OR OTHER DELETERIOUS MATERIALS ENCOUNTERED DURING THE SITE PREPARATION MUST BE REMOVED AND REPLACED WITH SELECT ENGINEERED FILL COMPACTED TO 90% PER ASTM D1557 AND MEETING THE SPECIFIED DESIGN BEARING CAPACITY. (SEE GEOTECH REPORT FOR MORE INFORMATION).
4. OWNER OR CONTRACTOR SHALL EMPLOY A SOILS TESTING LABORATORY APPROVED BY THE ENGINEER TO PERFORM TESTING SERVICES AS REQUIRED BY THE SPECIFICATIONS AND TO INSPECT ALL BEARING SURFACES OF SLABS AND FOUNDATIONS.
5. NOTIFY ENGINEER IF FOUNDATION CONDITIONS ENCOUNTERED DIFFER FROM SOILS EXPLORATION INFORMATION MADE AVAILABLE TO THE CONTRACTOR.
6. REMOVE ALL EXISTING PAVEMENT, STRUCTURES, FOUNDATIONS, TOPSOIL, UNSUITABLE FILLS, AND ORGANIC SOILS ENCOUNTERED WITHIN AND BELOW THE AREA TO BE OCCUPIED BY SLABS ON GRADE AND FOUNDATIONS. THESE MATERIALS SHALL NOT BE USED FOR FILL WITHIN OR ADJACENT TO THE BUILDING.
7. THE CONTRACTOR IS RESPONSIBLE FOR AND SHALL PROVIDE TEMPORARY SHORING, BRACING, UNDERPINNING, AND OTHER MEASURES NECESSARY TO ENSURE STABILITY AND SAFETY DURING ERECTION AND CONSTRUCTION AND TO PREVENT MOVEMENT OF SOIL THAT COULD DAMAGE EXISTING STRUCTURES, PAVEMENT, UTILITIES, ETC.
8. AFTER EXCAVATING FOR SLABS ON GRADE, THE EXPOSED NATURAL SOIL SHALL BE THOROUGHLY COMPACTED PRIOR TO PLACING THE GRANULAR MATERIAL.
9. CENTER FOOTINGS UNDER COLUMNS OR WALLS UNLESS NOTED.
10. UNLESS NOTED OTHERWISE ON THE CIVIL/SITE DRAWINGS, PROVIDE A MINIMUM 2% GRADE WITHIN 10-FEET OF THE PERIMETER OF THE FOUNDATION SYSTEM TO ALLOW SURFACE WATER TO DRAIN AWAY.
11. DO NOT PLACE FILL OR CONCRETE ON FROZEN GROUND.

CAST-IN-PLACE CONCRETE AND REINFORCEMENT

1. ALL CONCRETE WORK SHALL BE IN ACCORDANCE WITH ACI 318.
2. CONCRETE SHALL HAVE THE FOLLOWING 28-DAY COMPRESSIVE STRENGTHS:
   CAST-IN-PLACE CONCRETE . . . . 4,000 PSI
   FILL CONCRETE . . . . 1,500 PSI
3. USE 6 ± 1.5%, ENTRAINED AIR PER ASTM C260 FOR ALL CONCRETE EXPOSED TO WEATHER.
4. WATER CEMENT RATIO SHALL BE AS FOLLOWS:
   ALL INTERIOR SLABS-ON-GRADE . . . . .0.45 (MAX)
   CONCRETE WITH ENTRAINED AIR . . . . . . .0.45 (MAX)
   CONCRETE WITHOUT ENTRAINED AIR . . .0.48 (MAX)
5. FIBER REINFORCING SHALL CONFORM TO ASTM C1116. FIBER REINFORCEMENT SHALL BE MACRO FIBER UNIFORMLY DISPERSED IN THE CONCRETE MIXTURE PER THE MANUFACTURER'S RECOMMENDATION, BUT NOT LESS THAN A RATE OF 4.0 lb/Cu Yd AND 1.5 INCHES LONG.
6. ALL REINFORCING STEEL SHALL CONFORM TO ASTM A615 GRADE 60. ALL REINFORCING TO BE WELDED SHALL CONFORM TO ASTM A706.
7. ALL WELDED WIRE REINFORCING SHALL CONFORM TO ASTM A1064 PROVIDED IN FLAT SHEETS OR ROLLS.
8. ADMIXTURES SHALL CONTAIN NO MORE THAN 0.05% CHLORIDE IONS BY WEIGHT OF CEMENT WHEN TESTED IN ACCORDANCE WITH AASHTO T260.
9. CONTRACTOR SHALL KEEP A COPY OF "FIELD REFERENCE MANUAL: STANDARD SPECIFICATIONS FOR STRUCTURAL CONCRETE ACI 301 WITH SELECTED ACI REFERENCES", (ACI PUBLICATION SP-15) AT THE PROJECT FIELD OFFICE.
10. ALL REINFORCING DETAILS SHALL CONFORM TO "DETAILS AND DETAILING OF CONCRETE REINFORCEMENT" ACI 315, UNLESS DETAILED OTHERWISE ON THE STRUCTURAL DRAWINGS.
11. SUBMIT FOR APPROVAL CONCRETE MIX DESIGN AND CERTIFICATION OF CONFORMITY OF CONCRETE MATERIALS.
12. THE OWNER OR CONTRACTOR SHALL EMPLOY A TESTING LABORATORY APPROVED BY THE ENGINEER/ARCHITECT TO PERFORM THE TESTING SPECIFIED PER PARAGRAPH 1.6.4 OF ACI 301. THE TESTING LABORATORY SHALL MEET THE REQUIREMENTS OF ASTM E329. TESTING SHALL BE MADE BY AN ACI CONCRETE FIELD TESTING TECHNICIAN GRADE 1 OR APPROVED EQUIVALENT. A TECHNICIAN GRADE 1 SHALL BE PRESENT DURING ALL CONCRETE PLACEMENT.
13. SUBMIT SHOP DRAWINGS FOR REVIEW. THESE DRAWINGS SHALL SHOW ALL CONCRETE MEMBER DIMENSIONS AND DOWELS FOR MASONRY WALLS.
14. PROVIDE DOWELS FROM FOUNDATIONS TO MATCH COLUMN, PIER AND WALL VERTICAL REINFORCING.
15. PROVIDE ADEQUATE BOLSTERS, HI-CHAIRS, SUPPORT BARS, ETC., TO MAINTAIN SPECIFIED CLEARANCES FOR THE ENTIRE LENGTH OF ALL REINFORCING BARS. SUPPORTS THAT BEAR DIRECTLY ON EXPOSED SURFACES SHALL BE STAINLESS STEEL.
16. ALL SLABS SHALL BE POURED MONOLITHICALLY, EXCEPT FOR THE REQUIRED CONSTRUCTION JOINTS.
17. PROVIDE PERIMETER INSULATION AGAINST EXTERIOR FOUNDATION WALLS AND UNDER THE SLAB ADJACENT TO THE EXTERIOR OF THE BUILDING AS SHOWN ON THE ARCHITECTURAL DRAWINGS.
18. PROVIDE 3/4-INCH CHAMFER ON ALL EXPOSED CORNERS OF SLABS, COLUMNS AND WALLS UNLESS OTHERWISE INDICATED ON THE ARCHITECTURAL DRAWINGS. MINIMUM CLEARANCES FOR REINFORCING STEEL SHALL BE MAINTAINED.
19. CURE ALL CONCRETE FOR A MINIMUM 7-DAYS. APPLY CURING COMPOUND AT THE MAXIMUM COVERAGE RATE OF 300 SQUARE FEET PER GALLON. USE PRODUCT IN STRICT ACCORDANCE WITH THE MANUFACTURER'S RECOMMENDATIONS. SEE SPECIFICATIONS.
20. ALL CONSTRUCTION JOINTS SHALL BE KEYED. PROVIDE KEYWAYS AT MEMBER CENTERLINE WITH A DEPTH OF 1-1/2 INCH AND HEIGHT EQUAL TO ONE-THIRD OF THE MEMBER'S DEPTH/THICKNESS.
21. CONTRACTOR SHALL SUBMIT PROPOSED LOCATIONS OF CONSTRUCTION JOINTS NOT INDICATED ON THE DRAWINGS FOR REVIEW BY THE ENGINEER/ARCHITECT.
22. ALL ALUMINUM IN CONTACT WITH CONCRETE OR DISSIMILAR METALS SHALL BE COATED WITH GRAY EPOXY PRIMER, APPROVED BY THE ENGINEER.
23. FORMWORK, FOR ALL CONCRETE THAT WILL BE EXPOSED IN THE COMPLETED STRUCTURE, SHALL BE CONSTRUCTED FROM A METAL OR SUITABLE SURFACE PLYWOOD THAT WILL PRODUCE AN ACCEPTABLY SMOOTH SURFACE. SEE SPECIFICATIONS.
24. PITCH CONCRETE SLABS TO FLOOR DRAINS SHOWN ON MECHANICAL OR ARCHITECTURAL DRAWINGS.
25. CONCRETE PROTECTION (CLEAR COVER) FOR REINFORCEMENT BARS SHALL BE AS FOLLOWS UNLESS NOTED OTHERWISE:
    a. FOOTINGS:
       - 3 INCHES, BOTTOM AND UNFORMED EDGES
       - 2 INCHES, FORMED EDGES
       - 2 INCHES, EXPOSED TO EARTH, WATER OR WEATHER
    b. SLABS:
       - 3/4 INCHES TO REINFORCEMENT
    c. COLUMNS, PIERS:
       - 1-1/2 INCH TO TIES
       - 2 INCH FOR VERTICAL REINFORCEMENT
26. LAP SPLICE WELDED WIRE FABRIC ONE SPACE PLUS 2 INCHES AT EDGES AND ENDS AND PROVIDE ADDITIONAL REINFORCING WHERE SHOWN ON DRAWINGS. PLACE MESH 2 INCHES FROM TOP OF SLAB FOR SLABS ON GROUND AND 1 INCH FROM TOP OF SUPPORTED SLABS UNLESS NOTED OTHERWISE.
27. ALL HOOKS SHALL BE ACI STANDARD HOOKS UNLESS DIMENSIONED OTHERWISE.

CONCRETE MASONRY

1. MASONRY IS SUPPORTED IN THE COMPLETED CONSTRUCTION. THE CONTRACTOR IS SOLELY RESPONSIBLE FOR SUPPORTING THE MASONRY DURING CONSTRUCTION IN CONFORMANCE WITH LOCAL, STATE AND NATIONAL LAWS AND AS REQUIRED.
2. MASONRY CONSTRUCTION AND MATERIAL SHALL CONFORM TO ALL REQUIREMENTS OF "SPECIFICATIONS FOR MASONRY STRUCTURES" (ACI 530.1/ASCE 6) EXCEPT AS MODIFIED IN THE SPECIFICATIONS AND BELOW. A COPY OF ACI 530.1/ASCE 6 SHALL BE ON THE JOB SITE AT ALL TIMES THAT MASONRY WORK IS BEING PERFORMED.
3. SUBMIT FOR REVIEW, PRIOR TO CONSTRUCTION, SHOP DRAWINGS SHOWING A PLAN AND ELEVATION VIEW OF ALL CMU WALL, AND A PLAN THAT SHOWS ALL DOWELS REQUIRED FOR VERTICAL CMU REINFORCING THAT EXTEND OUT OF CONCRETE. SHOW WALL THICKNESS, AND DIMENSION WALL LENGTH AND LOCATION. SHOWING TOP ELEVATIONS OF WALLS, BOND BEAMS AND GROUT POURS. SHOW LOCATION OF CONTROL JOINT LOCATIONS, SOLID UNITS, CELLS TO BE GROUT FILLED, OPENING, LINTEL, JOINT REINFORCEMENT, REINFORCING BAR AND EMBEDMENT.
4. SUBMIT FOR REVIEW, PRIOR TO CONSTRUCTION, DOCUMENTATION FOR THE BLOCK, MORTAR, GROUT, ADMIXTURES, REINFORCING, BAR POSITIONER AND OTHER ACCESSORIES PROPOSED FOR USE. SUBMIT A WRITTEN DESCRIPTION OF THE METHOD OF REINFORCEMENT AND GROUT, AND OF GROUT CONSOLIDATION.
5. CONCRETE MASONRY UNITS SHALL CONFORM TO ASTM C90, NORMAL WEIGHT.
6. CONCRETE MASONRY UNITS WHICH CONTAIN VERTICAL REINFORCEMENT SHALL BE TWO CORE UNITS AND WITH CORES AND WEBS VERTICALLY ALIGNED.
7. MORTAR FOR CONCRETE MASONRY UNITS SHALL BE NON-AIR ENTRAINED PORTLAND CEMENT-LIME CONFORMING TO ASTM C270, TYPE S. CEMENT IN MORTAR SHALL BE LOW-ALKALI AND NON-STAINING. TYPE N MORTAR AND MASONRY CEMENT SHALL NOT BE USED FOR CMU CONSTRUCTION.
8. ADMIXTURES SHALL NOT BE USED IN THE MORTAR OR GROUT. ANTIFREEZE AND CALCIUM CHLORIDE SHALL NOT BE USED.
9. MINIMUM NET AREA COMPRESSIVE STRENGTH OF CONCRETE MASONRY UNITS SHALL BE:
   STANDARD BLOCK = 1,900 PSI (F'M = 1,500 PSI)
10. COARSE GROUT SHALL CONFORM TO ASTM C476 WITH A MAXIMUM AGGREGATE SIZE OF 3/8" AND A MINIMUM COMPRESSIVE STRENGTH OF 2000 PSI.
11. ALL CONCRETE BLOCK WALLS SHALL BE REINFORCED VERTICALLY WITH 1-#5 BAR AT 24 INCHES ON CENTER, UNLESS NOTED OTHERWISE.
12. PROVIDE 1-#5 VERTICAL BAR IN FIRST CORE AT EACH CORNER, END OF WALL, AND ADJACENT TO OPENINGS AND CONTROL JOINTS.
13. VERTICAL REINFORCEMENT SHALL EXTEND THROUGH BOND BEAMS AND TO WITHIN 2 INCHES OF THE TOP OF WALLS.
14. REINFORCING STEEL SPLICES SHALL BE LAPPED A MINIMUM OF 48 BAR DIAMETERS BUT NO LESS THAN 12 INCHES, UNLESS NOTED OTHERWISE.
15. ANCHORAGE OF REINFORCING STEEL INTO CONCRETE SHALL BE 36 BAR DIAMETERS BUT NO LESS THAN 12 INCHES, UNLESS NOTED OTHERWISE.
16. HORIZONTAL JOINT REINFORCING SHALL BE, UNLESS SHOWN OTHERWISE, STANDARD 9 GAGE, LADDER TYPE CONFORMING TO ASTM A951, SPACED VERTICALLY AT 8-INCH ON CENTERS ABOVE AND BELOW OPENINGS FOR THREE CONSECUTIVE COURSES AND AT 16 INCHES ON CENTERS ELSEWHERE. EXTEND REINFORCEMENT 2 FEET BEYOND EACH SIDE OF OPENINGS BUT DO NOT EXTEND THROUGH CONTROL JOINTS. PROVIDE FACTORY FABRICATED "T" AND "L" SHAPED PIECES AT INTERSECTIONS AND CORNERS.
17. JOINT REINFORCEMENT SHALL BE SPLICED BY LAPPING THE LONGITUDINAL WIRES AT LEAST 12 INCHES; THE CROSS-WIRES WITHIN THE LAP SHALL BE REMOVED SO THAT THE LONGITUDINAL WIRES ARE SIDE BY SIDE. ALTERNATELY WHERE JOINT REINFORCING IS NOT REQUIRED IN BETWEEN EACH COURSE, SPLICES MAY BE MADE BY ABUTTING THE ADJACENT SECTIONS OF JOINT REINFORCING AND CENTERING A 48 INCH LENGTH OF JOINT REINFORCING IN THE BED JOINT IMMEDIATELY ABOVE OR BELOW THE BUTT JOINT. SPLICE WITH "T" AND "L" SHAPED PIECES AT INTERSECTIONS AND CORNERS.
18. BOND BEAMS SHALL BE PROVIDED IN EACH WALL AT EACH FLOOR LEVEL, ROOF LEVEL, AND AT TOP OF WALL. FILL BOND BEAMS WITH GROUT. REINFORCE BOND BEAMS WITH 2-# 5 UNLESS NOTED OTHERWISE. PROVIDE CORNER BARS WITH 2'-0" LEGS AND BAR SUPPORTS TO OBTAIN THE REQUIRED CLEARANCE.
19. BOND BEAMS AT THE TOP OF SLOPED WALLS SHALL FOLLOW THE SLOPE OF THE WALL. CUT OUT WEB OF BLOCKS SO THAT THE REINFORCING BAR(S) ARE 4 INCHES CLEAR OF THE TOP OF THE WALL. A MINIMUM OF 16 INCHES VERTICALLY SHALL BE GROUT FILLED.
20. BOND BEAM REINFORCEMENT AND GROUT AT WALL CONTROL JOINTS SHALL BE CONTINUOUS. PROVIDE A DUMMY CONTROL JOINT IN BOTH FACES OF BOND BEAM ALIGNED WITH WALL CONTROL JOINTS. THE BLOCK FACE SHELLS AT DUMMY CONTROL JOINTS SHALL BE FREE OF MORTAR AND GROUT. THE DUMMY CONTROL JOINT IN EXPOSED FACES SHALL HAVE BACKING ROD AND CAULK SEAL AS REQUIRED FOR THE CONTROL JOINT.
21. VERTICAL CONTROL JOINTS IN CONCRETE MASONRY WALLS (OTHER THAN BASEMENT WALLS) SHALL BE PROVIDED WHERE SHOWN ON THE PLANS AND AS GIVEN BELOW:
    a. AT 25 FEET OR LESS ON CENTERS BUT NOT MORE THAN 1 1/2 TIMES THE WALL HEIGHT
    b. AT A DISTANCE NOT OVER ONE-HALF THE ABOVE SPACING FROM BONDED INTERSECTIONS OR CORNERS.
    c. AT ONE END OF A LINTEL FOR WALL OPENINGS SIX FEET OR LESS IN WIDTH
    d. AT BOTH ENDS OF LINTELS FOR OPENINGS MORE THAN SIX FEET WIDE
    e. ALL ABRUPT CHANGES IN WALL HEIGHT.
    f. AT ALL CHANGES IN WALL THICKNESS, SUCH AS THOSE AT PIPE AND DUCT CHASES AND THOSE ADJACENT TO COLUMNS OR PILASTERS.
    g. ABOVE JOINTS IN FOUNDATIONS AND FLOORS.
    h. BELOW JOINTS IN ROOFS AND FLOORS THAT BEAR IN THE WALL.
22. CONTROL JOINTS SHALL NOT OCCUR AT WALL CORNERS, INTERSECTIONS, ENDS, WITHIN 2'-0" OF CONCENTRATED POINTS OF BEARING, OR JAMBS OVER OPENINGS UNLESS SPECIFICALLY SHOWN ON THE STRUCTURAL DRAWINGS.
23. ALL MASONRY BELOW GRADE SHALL BE GROUTED SOLID.
24. MECHANICALLY VIBRATE GROUT IN VERTICAL SPACES IMMEDIATELY AFTER POURING AND AGAIN MINUTES LATER.
25. PROVIDE CLEANOUTS IF GROUT LIFT EXCEEDS 4'-0" IN BLOCK WALLS. MAXIMUM GROUT LIFT SHALL BE 8'-0".

PRECAST CONCRETE LINTELS

1. PRECAST CONCRETE LINTELS SHALL BE MANUFACTURED AND INSTALLED IN ACCORDANCE WITH THE PRECAST MANUFACTURER'S SPECIFICATIONS.
2. PROVIDE LINTELS OVER ALL MASONRY OPENINGS AND OVER RECESSES WIDER THAN 12 INCHES IN ACCORDANCE WITH THE ACCOMPANYING LINTEL SCHEDULE ON SHEET S0.2, UNLESS NOTED OTHERWISE ON DRAWINGS.
3. PRECAST CONCRETE LINTELS SHALL BE MANUFACTURED UTILIZING:
   a. MINIMUM CONCRETE COMPRESSIVE STRENGTH, F'_C = 3,500 PSI
   b. REINFORCING YIELD STRENGTH, F_Y = ASTM A615, GRADE 60
   c. MINIMUM GROUT COMPRESSIVE STRENGTH, ASTM C476, F'G = 3,000 PSI
4. PRECAST CONCRETE LINTELS SHALL HAVE A MINIMUM BEARING LENGTH OF 8-INCHES AT EACH END.
5. BELOW EACH BEARING POINT OF LINTEL, GROUT FILL CELLS FOR A MINIMUM OF 16" BEYOND EDGE OF OPENING AND A MINIMUM OF 16" BELOW LINTEL BEARING.
6. WHERE CONTROL JOINTS ARE AT ENDS OF LINTELS, PROVIDE 15 POUND FELT BOND BREAKER UNDER LINTEL BEARING AND DUMMY CONTROL JOINT ON EXPOSED FACES. NO MORTAR OR GROUT SHALL BE IN THE HEAD JOINT OF DUMMY CONTROL JOINTS OPPOSITE THE BLOCK SHELL. PROVIDE A POSITIVE MEANS OF PREVENTING GROUT FROM ENTERING DUMMY JOINT OPPOSITE THE BLOCK SHELL.

STRUCTURAL STEEL

1. STEEL SHALL BE FABRICATED BY A FABRICATOR HAVING AN AISC QUALITY CERTIFICATION CATEGORY: "STANDARD FOR STEEL BUILDING STRUCTURES (STD)."
2. STRUCTURAL STEEL WORK SHALL CONFORM TO THE "STEEL CONSTRUCTION MANUAL, AISC 360."
3. THE CONTRACTOR SHALL BE RESPONSIBLE FOR THE DESIGN OF MEMBERS AND CONNECTIONS FOR ANY PORTION OF THE STRUCTURE NOT INDICATED ON THE PLANS. ALL SPECIAL CONDITIONS AND CONNECTIONS SHALL BE CAREFULLY AND COMPLETELY DETAILED AND SUBMITTED FOR APPROVAL.
4. CONTRACTOR SHALL VERIFY THE EXACT LOCATION AND SIZE OF ALL OPENINGS FOR MECHANICAL EQUIPMENT WITH THE MECHANICAL CONTRACTOR PRIOR TO FABRICATION OF MATERIALS.
5. ANY STEEL SHOWN ON DRAWINGS FOR SUPPORTING OR CONNECTING MECHANICAL, ELECTRICAL, OR PLUMBING EQUIPMENT IS FOR BID PURPOSES ONLY. CONTRACTOR SHALL COORDINATE EXACT SIZE AND LOCATION PRIOR TO PROCEEDING WITH CONSTRUCTION.
6. UNLESS SHOWN ON STRUCTURAL DRAWINGS, CONTRACTOR SHALL NOT CUT ANY HOLES IN STRUCTURAL STEEL MEMBERS WITHOUT WRITTEN PERMISSION FROM THE STRUCTURAL ENGINEER.
7. ALL STEEL BEAMS SHALL BE FABRICATED AND ERECTED WITH THE NATURAL CAMBER (WITHIN THE MILL TOLERANCE) LOCATED ABOVE THE HORIZONTAL CENTERLINE BETWEEN THE END CONNECTIONS.
8. STEEL SHALL CONFORM TO THE FOLLOWING UNLESS OTHERWISE NOTED:
   a. ANGLES, PLATES, ETC: ASTM A36
   b. STRUCTURAL TUBING:
      SQUARE & RECTANGULAR, ASTM A500, GRADE B, 46 KSI
   c. ANCHOR RODS: ASTM F1554, GRADE 36
9. WELDED CONNECTIONS SHALL CONFORM TO THE REQUIREMENTS OF THE AMERICAN WELDING SOCIETY, AWS D1.1. WELDING ELECTRODE MATERIAL SHALL BE E70XX.
10. MINIMUM WELDS, WHERE NOT SHOWN ON DRAWINGS, SHALL BE 3/16 INCH FILLET WELD, ALL AROUND.
11. ALL CONNECTIONS SHALL BE MADE WITH 3/4-INCH ASTM A325 BOLTS TIGHTENED TO SNUG-TIGHT CONDITION UNLESS OTHERWISE NOTED.
12. ALL CONNECTIONS NOT DETAILED ON THE DRAWINGS SHALL BE DESIGNED AND DETAILED BY THE FABRICATOR UTILIZING THE REQUIREMENTS IN AISC 360, AND THE CONTRACT DOCUMENTS. THE FABRICATOR SHALL USE ALLOWABLE STRESS DESIGN METHODOLOGY TO COMPLETE ALL CONNECTION DESIGNS INCLUDING THE FOLLOWING GUIDELINES.
    a. DETAIL ALL BOLTED CONNECTIONS AS BEARING TYPE CONNECTIONS WITH THREADS IN THE SHEAR PLANE, EXCEPT THE FOLLOWING CONNECTIONS, WHICH SHALL BE DESIGNED AS SLIP-CRITICAL CONNECTIONS:
       - ALL CONNECTIONS IN DIRECT TENSION.
       - ALL BEAM OR GIRDER CONNECTIONS USING OVERSIZED HOLES OR LONG SLOTS.
       - ANY CONNECTION NOTED ON THE CONTRACT DRAWINGS AS SLIP-CRITICAL CONNECTION.
13. ALL SHELF ANGLES AND LINTELS IN EXTERIOR WALLS, INCLUDING BEARING PLATES AND ANCHOR RODS, SHALL BE GALVANIZED AFTER FABRICATION.
14. ALL STEEL AND CORRESPONDING CONNECTIONS EXPOSED TO WEATHER SHALL BE HOT-DIP GALVANIZED IN ACCORDANCE WITH ASTM A123 AND A153, RESPECTIVELY.
15. ALL STEEL, AND ANCHOR RODS THAT WILL BE GALVANIZED, ENCASED IN CONCRETE, OR RECEIVE SPRAYED ON FIREPROOFING SHALL NOT BE PAINTED.
16. PROVIDE 3/8-INCH DIAMETER WEEP HOLES AT BASE OF HSS AND PIPE COLUMNS AND IN BOTTOM OF CAPPED HSS BEAMS.
17. PROVIDE 1/4" MIN CLOSURE PLATES TO ALL HOLLOW STRUCTURAL SECTIONS WITH A 1/4" FILLET WELD ALL AROUND.
18. SET COLUMN BASE PLATES UPON NON-METALLIC, SHRINK RESISTANT GROUT CONFORMING TO ASTM C1107.
19. PROVIDE HARDENED STEEL WASHERS CONFORMING TO ASTM F436 AND HEAVY HEX NUTS ON ANCHOR RODS.

STEEL JOISTS AND JOIST GIRDERS

1. ALL STEEL JOISTS, INCLUDING ANCHORAGE AND BRIDGING, SHALL BE FABRICATED AND ERECTED IN ACCORDANCE WITH THE STEEL JOIST INSTITUTE "STANDARD SPECIFICATIONS, LOAD TABLES AND WEIGHT TABLES FOR STEEL JOISTS AND JOIST GIRDERS".
2. JOIST SIZES INDICATED ON THE PLANS ARE THE MINIMUMS. JOIST AND GIRDER LOADS SHOWN ON THE PLANS ARE SUPERIMPOSED AND DO NOT INCLUDE SELF-WEIGHT.
3. JOIST MANUFACTURER SHALL DESIGN AND SUBMIT CALCULATIONS BY A REGISTERED ENGINEER FOR ALL SPECIALTY JOISTS, EXCEPT PARALLEL CHORD JOISTS WITH UNIFORM LOADS AND CONTINUOUSLY SUPPORTED COMPRESSION CHORDS PER SJI STANDARD LOAD TABLES.
4. ALL JOIST CALCULATIONS SHALL INCLUDE DEFLECTION AND CAMBER REQUIREMENTS. LIVE LOAD DEFLECTIONS SHALL BE LIMITED TO SPAN/360 AND TOTAL LOAD SHALL BE LIMITED TO SPAN/240.
5. ALL JOISTS SHALL BE CAMBERED FOR THE DESIGN DEAD LOADS.
6. JOIST TOP CHORD AND BOTTOM CHORD EXTENSIONS SHALL BE PROVIDED WHERE INDICATED ON ARCHITECTURAL OR STRUCTURAL DRAWINGS.
7. CAMBER OF JOIST ADJACENT TO BEAMS AND WALLS TO WHICH THE METAL DECK IS TO BE ATTACHED SHALL BE SUCH THAT THE METAL DECK CAN BE ATTACHED TO THE WALL OR BEAM WITHOUT DAMAGING THE METAL DECK. COORDINATE JOIST CAMBER WITH BEAM CAMBER.
8. LH JOISTS SHALL BE WELDED TO SUPPORTING STEEL WITH TWO 1/4-INCH FILLET WELDS 2-INCH LONG, MINIMUM, UNLESS NOTED OTHERWISE ON PLAN.
9. K-SERIES JOISTS SHALL BE WELDED TO SUPPORTING STEEL WITH TWO 1/8 INCH FILLET WELDS 2 1/2 INCH LONG, MINIMUM, UNLESS NOTED OTHERWISE ON PLAN.
10. JOIST BRIDGING (SPACING, TYPE, SIZE AND INSTALLATION) SHALL BE AS SPECIFIED IN THE SJI SPECIFICATIONS AND SHALL BE THE RESPONSIBILITY OF THE JOIST MANUFACTURER. BRIDGING HAS NOT BEEN SHOWN ON THE PLANS.
11. ENDS OF ALL BRIDGING LINES TERMINATING AT WALLS OR BEAMS SHALL BE ANCHORED TO WALLS PER TYPICAL DETAILS.
12. FIELD DRILLING OR BURNING HOLES IN JOIST AND JOIST GIRDER MEMBERS IS NOT PERMITTED.
13. THE JOISTS AND JOIST GIRDERS HAVE BEEN SELECTED FOR THE DESIGN DEAD AND LIVE LOAD ONLY. THE JOIST MANUFACTURER SHALL PROVIDE JOISTS AND JOIST GIRDERS THAT ARE DESIGNED FOR THE LOADS SHOWN ON THESE PLANS.
14. MANUFACTURER SHALL ADD ADDITIONAL WEB MEMBERS AS REQUIRED AND ADJUST CHORD AND WEB SIZES ACCORDINGLY. DEPTHS OF JOIST GIRDERS SHALL NOT BE ALTERED.
15. DESIGN CALCULATIONS SHALL INCLUDE SUPERIMPOSED LOADS FOR FRAMING SUPPORTED EQUIPMENT. VERIFY SIZE, WEIGHT AND LOCATION WITH ARCHITECTURAL, MECHANICAL, PLUMBING AND ELECTRICAL DRAWINGS AND SUBMITTED SHOP DRAWINGS.
16. THE JOISTS AND THE ERECTION OF THE JOISTS SHALL CONFORM TO THE REQUIREMENTS OF OSHA.
17. IF POSSIBLE, HANGERS SUPPORTING MECHANICAL EQUIPMENT, ETC. SHALL BE LOCATED AT THE JOIST PANEL POINTS. IF HANGERS ARE LOCATED BETWEEN JOIST PANEL POINTS, PROVIDE JOIST STIFFENERS AS INDICATED IN TYPICAL DETAILS. ALL HANGERS TO BE HUNG OFF BOTTOM CHORD CENTERLINE.
18. PROVIDE HEADERS SIZED FOR THE REACTION OF JOIST BEARING ON THE HEADER PLUS WEIGHT OF WALL BEARING ON HEADER.
19. MANUFACTURER SHALL DESIGN JOIST AND JOIST GIRDERS IN ACCORDANCE WITH THE UL DESIGN REQUIREMENTS IN ORDER TO ACHIEVE THE FIRE RATING SPECIFIED IN THE ARCHITECTURAL DRAWINGS/SPECIFICATIONS.
20. JOIST MANUFACTURER SHALL ALIGN WEB MEMBERS OF ADJACENT JOISTS WITH THE SAME DEPTH TO PERMIT MECHANICAL, ELECTRICAL, AND PLUMBING APPURTENANCES TO PASS THROUGH THE JOIST.

1 GENERAL NOTES

REVISIONS
1
2
3
4
5
6

AutoZone Store No. 6890
1593 NORTH MAIN STREET
LILLINGTON, NC 27546
GENERAL NOTES

DRAWN BY: SMA
DESIGNED BY: CR

AutoZone®

PAUL J. FORD & COMPANY
250 E Broad St, Ste 600 · Columbus, OH 43215
Phone 614.221.6679
www.pauljford.com
A62720-0039
CORP NO. C-2090

SEAL 044971
BRIAN WAYNE STARRETT
05/19/2020

05/13/2020
65W2
S0

G:\Architecture\A_Projects\Columbus Projects\627 - AutoZone\A62720-no\A62720-0039 NC6890 - Lillington NC\Drawings\Current\NC6890 S0.0.dwg 5/19/2020 12:27:29 PM

METAL DECK

1. DESIGN, FABRICATION AND INSTALLATION OF STEEL DECK UNITS SHALL CONFORM TO THE STEEL DECK INSTITUTE "DESIGN MANUAL FOR COMPOSITE DECKS, FORM DECKS AND ROOF DECKS AND AISI NAS, AISI S210.

2. ROOF DECK:
   a. 1-1/2 INCH DEEP GALVANIZED WIDE RIB STEEL DECK:

   20 GAUGE: I_{MIN} = 0.210 IN^4
   $S_{n(min)}$ = 0.232 IN^3
   $S_{p(min)}$ = 0.245 IN^3

3. GALVANIZED STEEL ROOF DECK AND ACCESSORIES SHALL CONFORM TO ASTM A653 (STRUCTURAL QUALITY) WITH A MINIMUM YIELD STRENGTH OF 33 KSI WITH A MINIMUM G60 GALVANIZING FINISH IN ACCORDANCE WITH ASTM A924. PRIME PAINTED STEEL ROOF DECK AND ACCESSORIES SHALL CONFORM TO ASTM A1008 WITH A MINIMUM YIELD STRENGTH OF 33 KSI.

4. STEEL DECKING SHALL BE ATTACHED TO SUPPORTING STRUCTURAL FRAMING AS INDICATED IN TYPICAL DECK ATTACHMENT DETAIL. ATTACHMENT SHALL BE PERFORMED IN ACCORDANCE WITH THE MORE STRINGENT REQUIREMENTS FROM BOTH SDI OR THE DECK MANUFACTURER'S SPECIFICATIONS.

5. STEEL DECK SHALL BE CONTINUOUS OVER THREE SPANS. USE HEAVIER GAGE DECK WHEN DECK IS NOT CONTINUOUS OVER THREE SPANS TO PROVIDE SIMILAR ALLOWABLE LOAD CAPACITIES.

COLD-FORMED METAL FRAMING

1. COLD FORMED METAL FRAMING SHALL CONFORM TO THE REQUIREMENTS OF THE AISI S100, AISI S200, AISI 211.

2. PRIOR TO FABRICATION OF FRAMING, THE CONTRACTOR SHALL SUBMIT FABRICATION AND ERECTION DRAWINGS TO THE ENGINEER FOR APPROVAL. SAID DRAWINGS SHALL BE DESIGNED, DETAILED, SIGNED AND SEALED BY A STRUCTURAL ENGINEER REGISTERED IN THE STATE OF THE PROJECT.

3. COLD-FORMED MEMBERS SHALL BE FORMED FROM CORROSION-RESISTANT STEEL CONFORMING TO ASTM 653 WITH YIELD AS FOLLOWS:
   18 GAGE AND THINNER 33 KSI
   16 GAGE AND THICKER 50 KSI

4. MEMBERS THAT ARE PART OF THE EXTERIOR ENVELOPE OF THE BUILDING SHALL HAVE A MINIMUM G90 COATING.

5. ALL THE COLD FORMED MEMBERS SHALL COME FROM A SINGLE MANUFACTURER. THE INSTALLATION SHALL COMPLY WITH THE MANUFACTURER'S RECOMMENDATIONS.

6. FASTENING OF COMPONENTS SHALL BE WITH SELF-DRILLING CORROSION RESISTANT (OR ZINC COATED) SCREWS. SCREWS SHALL BE OF SUFFICIENT SIZE TO ENSURE THE STRENGTH OF THE CONNECTION.

7. SPLICES IN FRAMING COMPONENTS OTHER THAN TRACK ARE NOT PERMITTED.

8. STUDS SHALL BE INSTALLED SO THE ENDS ARE POSITIONED AGAINST THE INSIDE OF THE RUNNER TRACK WEB PRIOR TO FASTENING AND SHALL BE ATTACHED TO BOTH FLANGES OF THE UPPER AND LOWER RUNNER TRACKS.

9. ATTACH TRACKS TO STRUCTURAL STEEL AND CONCRETE WITH ONE POWDER DRIVEN FASTENER, AS LISTED BELOW, AT EACH STUD LOCATION, UNLESS NOTED OTHERWISE.
   a. IN STEEL:
      - KNURLED SHANKS.
      - 1/4" MINIMUM PENETRATION.
      - MINIMUM STRENGTH CAPACITIES OF 350 LB PULLOUT AND 700 LB SHEAR.
      - SPACING NO CLOSER THAN 1-1/2" OC AND NO CLOSER THAN 1/2" TO EDGE OF THE STEEL MEMBER.

10. MEMBERS SHALL HAVE THE FOLLOWING MINIMUM PROPERTIES:

MEMBER	SIZE DEPTH	GAGE	F_y (KSI)	GROSS AREA (IN^2)	I_{eff} (IN^4)	S_{eff} (IN^3)
STUD	6"	16	50	0.556	2.86	0.916
TRACK	6"	16	50	0.509	2.40	0.609

11. ALL STUDS SHALL BE SECURELY SEATED FOR FULL END BEARING ON TOP AND BOTTOM TRACK.

N.T.S.

GENERAL NOTES

POST-INSTALLED FASTENERS

1. POST-INSTALLED ANCHORS SHALL ONLY BE USED WHERE SPECIFIED ON THE DRAWINGS.

2. INSTALL BOLTS AND FASTENERS TO MISS REINFORCING.

3. PRIOR TO DRILLING FOR THE ANCHOR CONCRETE REINFORCING STEEL SHALL BE LOCATED WITH A MAGNETIC BAR LOCATOR.

4. FASTENERS SHALL BE INSTALLED IN ACCORDANCE WITH THE MANUFACTURER'S PRINTED INSTALLATION INSTRUCTIONS AND AS GIVEN BELOW. NOTIFY THE ENGINEER IF CONFLICTS EXIST BETWEEN THE MANUFACTURER'S PRINTED INSTALLATION INSTRUCTIONS AND THE BELOW REQUIREMENTS.

5. FASTENERS SHALL BE INSTALLED AT NOT LESS THAN THE MANUFACTURER'S MINIMUM EDGE DISTANCES AND/OR SPACINGS INDICATED IN THE MANUFACTURER'S LITERATURE, UNLESS INDICATED ON THE STRUCTURAL DRAWINGS OR APPROVED BY THE ENGINEER OF RECORD.

6. DRILL HOLES USING ROTARY PERCUSSION DRILL WITH A DEPTH GAGE. DO NOT DRILL THROUGH FULL THICKNESS OF MASONRY. CLEAN HOLES BY VIGOROUSLY BRUSHING AND THEN BLOW OUT LOOSE MATERIAL USING OIL-FREE COMPRESSED AIR. THE BRUSH SHALL HAVE THE STIFF NON-METALLIC BRISTLES OF TYPE AND DIAMETER RECOMMENDED BY THE ADHESIVE MANUFACTURER. IF CONCRETE IS DAMP BLOW DRY HOLE WITH OIL-FREE COMPRESSED AIR. CLEAN WITH WATER ONLY IF RECOMMENDED BY MANUFACTURER. ADHESIVE ANCHORS MAY NOT BE SET IF WATER IS SEEPING INTO HOLE; NOTIFY THE ENGINEER.

7. ADHESIVE DOWELS AND ANCHORS IN MASONRY SHALL BE OF THE TYPE SHOWN AND INSTALLED USING "HIT HY-270" BY HILTI OR APPROVED EQUAL.

8. EXPANSION BOLTS IN CONCRETE AND FULLY GROUTED MASONRY SHALL BE HILTI "KWIK BOLT 3", SIMPSON "WEDGE ALL" OR APPROVED EQUAL.

9. CONTRACTOR SHALL SUBMIT MANUFACTURERS LITERATURE FOR THE ANCHOR SYSTEM TO BE USED. THIS LITERATURE SHALL INCLUDE ANCHOR MATERIAL, STRENGTH DATA, EMBEDMENT LENGTH, DRILL BIT SIZE AND THE MANUFACTURER'S PRINTED INSTALLATION INSTRUCTIONS. FOR ADHESIVE ANCHORS INCLUDE ADHESIVE CHEMISTRY.

SPECIAL INSPECTIONS

PER THE IBC SECTION 1704, SPECIAL INSPECTIONS ARE REQUIRED FOR THE FOLLOWING ITEMS:

1. STRUCTURAL STEEL:
   a. MATERIAL VERIFICATION OF HIGH STRENGTH BOLTS, NUTS AND WASHERS. (PERIODIC)
   b. INSPECTION DURING THE TIGHTENING OF HIGH STRENGTH BOLTS IN:
      - BEARING-TYPE CONNECTIONS (PERIODIC)
   c. MATERIAL VERIFICATION OF STRUCTURAL STEEL
   d. MATERIAL VERIFICATION OF WELD FILLER MATERIALS
   e. VISUAL INSPECTION OF FIELD WELDS:
      - SINGLE-PASS FILLET WELDS ≤ 5/16" (PERIODIC)
   f. SPECIAL INSPECTIONS ARE NOT REQUIRED FOR WORK DONE ON THE PREMISES OF AN APPROVED FABRICATOR.

2. CONCRETE:
   a. INSPECTION OF REINFORCING STEEL AND PLACEMENT. (PERIODIC)
   b. INSPECTION DURING WELDING OF REINFORCING STEEL:
      - VERIFICATION OF WELDABILITY OF REINFORCING STEEL OTHER THAN ASTM A706. (PERIODIC)
      - SHEAR REINFORCEMENT. (CONTINUOUS)
      - OTHER REINFORCING STEEL. (PERIODIC)
   c. INSPECT BOLTS TO BE INSTALLED IN CONCRETE PRIOR TO AND DURING PLACEMENT OF CONCRETE. (CONTINUOUS)
   d. VERIFYING USE OF REQUIRED MIX DESIGN. (PERIODIC)
   e. AT THE TIME FRESH CONCRETE IS SAMPLED TO FABRICATE SPECIMENS FOR STRENGTH TESTS, PERFORM SLUMP AND AIR CONTENT TESTS, AND DETERMINE THE TEMPERATURE OF THE CONCRETE. (CONTINUOUS)
   f. INSPECTION OF CONCRETE PLACEMENT FOR PROPER APPLICATION TECHNIQUES. (CONTINUOUS)
   g. INSPECTION OF SPECIFIED CURING AND TEMPERATURE AND TECHNIQUES. (PERIODIC)
   h. INSPECT FORMWORK FOR SHAPE, LOCATION AND DIMENSIONS OF THE CONCRETE MEMBER BEING FORMED. (PERIODIC)
   i. NO INSPECTION IS REQUIRED FOR SLABS ON GRADE.

3. MASONRY:
   a. AS MASONRY CONSTRUCTION BEGINS, THE FOLLOWING SHALL BE VERIFIED TO ENSURE COMPLIANCE:
      - PROPORTIONS OF SITE-PREPARED MORTAR. (PERIODIC)
      - CONSTRUCTION OF MORTAR JOINTS. (PERIODIC)
      - LOCATION OF REINFORCEMENT. (PERIODIC)
   b. THE INSPECTION PROGRAM SHALL VERIFY:
      - SIZE AND LOCATION OF STRUCTURAL ELEMENTS. (PERIODIC)
      - TYPE, SIZE AND LOCATION OF ANCHORS, INCLUDING OTHER DETAILS OF ANCHORAGE OF MASONRY TO STRUCTURAL MEMBERS, FRAMES OR OTHER CONSTRUCTION. (PERIODIC)
      - SPECIFIED SIZE, GRADE AND TYPE OF REINFORCEMENT. (PERIODIC)
      - WELDING OF REINFORCING BARS. (CONTINUOUS)
      - PROTECTION OF MASONRY DURING COLD WEATHER (TEMPERATURE BELOW 40°F) OR HOT WEATHER (TEMPERATURE ABOVE 90°F). (PERIODIC)
   c. PRIOR TO GROUTING, THE FOLLOWING SHALL BE VERIFIED TO ENSURE COMPLIANCE:
      - GROUT SPACE IS CLEAN. (PERIODIC)
      - PLACEMENT OF REINFORCEMENT. (PERIODIC)
      - PROPORTIONS OF SITE-PREPARED GROUT. (PERIODIC)
      - CONSTRUCTION OF MORTAR JOINTS. (PERIODIC)
   d. GROUT PLACEMENT SHALL BE VERIFIED TO ENSURE COMPLIANCE WITH CODE AND CONSTRUCTION DOCUMENT PROVISIONS. (CONTINUOUS)
   e. PREPARATION OF ANY REQUIRED GROUT SPECIMENS, MORTAR SPECIMENS AND/OR PRISMS SHALL BE OBSERVED. (CONTINUOUS)
   f. COMPLIANCE WITH REQUIRED INSPECTION PROVISIONS OF THE CONSTRUCTION DOCUMENTS AND THE APPROVED SUBMITTALS SHALL BE VERIFIED. (PERIODIC)

4. GEOTECHNICAL:
   a. VERIFY MATERIALS BELOW FOOTINGS ARE ADEQUATE TO ACHIEVE THE DESIGN BEARING CAPACITY. (PERIODIC)
   b. VERIFY EXCAVATIONS ARE EXTENDED TO PROPER DEPTH AND HAVE REACHED PROPER MATERIAL. (PERIODIC)
   c. PERFORM CLASSIFICATION AND TESTING OF CONTROLLED FILL MATERIALS. (PERIODIC)
   d. VERIFY USE OF PROPER MATERIALS, DENSITIES AND LIFT THICKNESS DURING PLACEMENT AND COMPACTION OF CONTROLLED FILL. (CONTINUOUS)
   e. PRIOR TO PLACEMENT OF CONTROLLED FILL, OBSERVE SUBGRADE AND VERIFY THAT THE SITE HAS BEEN PROPERLY PREPARED. (PERIODIC)

5. EXPANSION AND EPOXY ADHESIVE ANCHORS:
   a. RECORD PRODUCT DESCRIPTION INCLUDING THE ADHESIVE PRODUCT NAME AND EXPIRATION DATE, ADHESIVE MIXING PROCEDURE AND USE OF PROPER NOZZLES FOR ALL CARTRIDGES. (PERIODIC)
   b. VERIFY ANCHOR OR REINFORCEMENT BAR MATERIAL, GRADE, DIAMETER, LENGTH, AND CLEANLINESS. (PERIODIC)
   c. VERIFY DRILL BIT DIAMETER, INCLUDING VERIFICATION OF DIAMOND-CORE AND CARBIDE-TIPPED DRILL BIT COMPLIANCE WITH ANSI B212.15. (PERIODIC)
   d. VERIFY DEPTH AND CLEANLINESS OF HOLES. (PERIODIC)
   e. VERIFY CONCRETE COMPRESSIVE STRENGTH BY ASTM C42 METHODS. (PERIODIC)
   f. VERIFY PHYSICAL PROPERTIES OF THE CONCRETE MASONRY WALL CONSTRUCTION COMPONENTS. (PERIODIC)
   g. VERIFY SUBSTRATE TEMPERATURE AT TIME OF ANCHOR INSTALLATION. (PERIODIC)
   h. VERIFY ACTUAL GEL TIME WHEN INSTALLED ANCHORS ARE NOT DISTURBED. (PERIODIC)
   i. VERIFY THAT THE ANCHOR INSTALLATION AND LOCATION, INCLUDING SPACING AND EDGE DISTANCE, ARE IN COMPLIANCE WITH THE MANUFACTURER'S SPECIFICATIONS. (PERIODIC)

6. DUTIES AND RESPONSIBILITIES OF THE SPECIAL INSPECTOR:
   a. THE SPECIAL INSPECTOR SHALL OBSERVE THE WORK ASSIGNED TO BE CERTAIN IT CONFORMS TO THE APPROVED CONSTRUCTION DOCUMENTS.
   b. THE SPECIAL INSPECTOR SHALL FURNISH INSPECTION REPORTS TO THE BUILDING OFFICIAL, AND TO THE REGISTERED DESIGN PROFESSIONAL IN CHARGE.
   c. ALL DISCREPANCIES SHALL BE BROUGHT TO THE IMMEDIATE ATTENTION OF THE CONTRACTOR FOR CORRECTION. IF THE DISCREPANCIES ARE NOT CORRECTED, THE DISCREPANCIES SHALL BE BROUGHT TO THE ATTENTION OF THE BUILDING OFFICIAL AND TO THE REGISTERED DESIGN PROFESSIONAL IN CHARGE PRIOR TO THE COMPLETION OF THAT PHASE OF THE WORK.
   d. A FINAL REPORT DOCUMENTING REQUIRED SPECIAL INSPECTIONS AND CORRECTION OF ANY DISCREPANCIES NOTED IN THE INSPECTIONS SHALL BE SUBMITTED TO THE BUILDING OFFICIAL PRIOR TO THE ISSUANCE OF A CERTIFICATE OF OCCUPANCY.
   e. PRIOR TO START OF CONSTRUCTION CONTRACTOR SHALL PROVIDE STATEMENT OF SPECIAL INSPECTIONS ACKNOWLEDGING THE REQUIREMENTS OF IBC SECTION 1710.

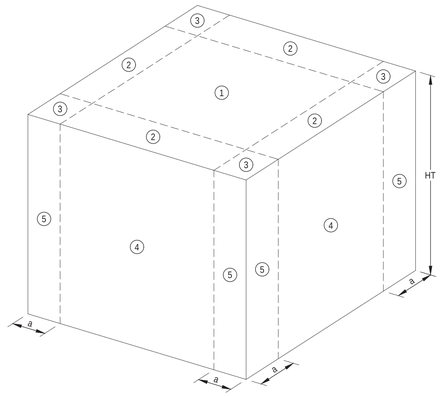

SCHEMATIC ELEVATION

WIND PRESSURE (ASCE 7-10) FOR COMPONENTS & CLADDING (ASD)

EFFECTIVE AREA OF OPENING, A (S.F.)	ZONE 1		ZONE 2		ZONE 3		ZONE 4		ZONE 5	
	PRESSURE (PSF)	SUCTION (PSF)	PRESSURE (PSF)	SUCTION (PSF)	PRESSURE (PSF)	SUCTION (PSF)	PRESSURE (PSF)	SUCTION (PSF)	PRESSURE (PSF)	SUCTION (PSF)
A ≤ 10	16.0	-31.9	16.0	-53.5	16.0	-80.4	31.9	-34.6	31.9	-42.7
10 < A ≤ 20	16.0	-31.0	16.0	-47.7	16.0	-66.7	30.4	-33.1	30.4	-39.9
20 < A ≤ 50	16.0	-30.0	16.0	-40.2	16.0	-48.3	28.5	-31.2	28.5	-36.0
50 < A ≤ 100	16.0	-29.2	16.0	-34.6	16.0	-34.6	27.1	-29.8	27.1	-33.1

NOTES:
1. VALUES LISTED IN THE ABOVE TABLE ARE BASED UPON AN ENCLOSED BUILDING USING THE SPECIFIED WIND LOADING AS INDICATED IN THE 'DESIGN LOADS' SECTION OF THE GENERAL NOTES.
2. PRESSURE (POSITIVE) AND SUCTION (NEGATIVE) VALUES SIGNIFY LOADING ACTING TOWARDS AND AWAY FROM THE BUILDING SURFACES, RESPECTIVELY (FULL HEIGHT, UNLESS NOTED.)
3. VALUES LISTED IN THE ABOVE TABLE ARE ULTIMATE DESIGN WIND PRESSURES. TO OBTAIN ALLOWABLE STRESS DESIGN WIND VALUES, MULTIPLY THE VALUES SHOWN IN THE ABOVE TABLE BY 0.6.
4. EDGE STRIP "a" = 3'-0", UNLESS NOTED OTHERWISE.
5. SUCTION VALUES LISTED IN ROOF ZONES 1, 2 & 3 INDICATE GROSS UPLIFT PRESSURES.

N.T.S.

WIND PRESSURE TABLE

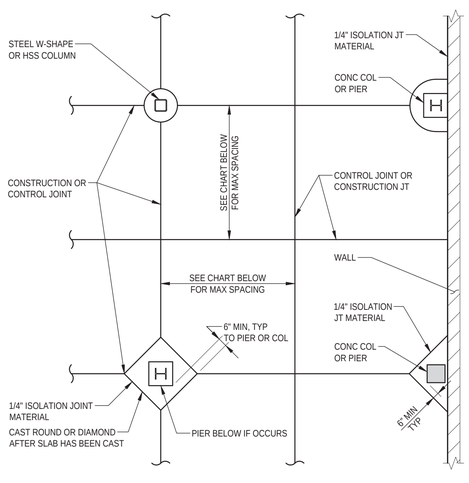

NOTE:

MAXIMUM LENGTH/WIDTH RATIO FOR JOINTS 1:1 1/2".

N.T.S.

1 TYPICAL SLAB ON GRADE JOINT PATTERN

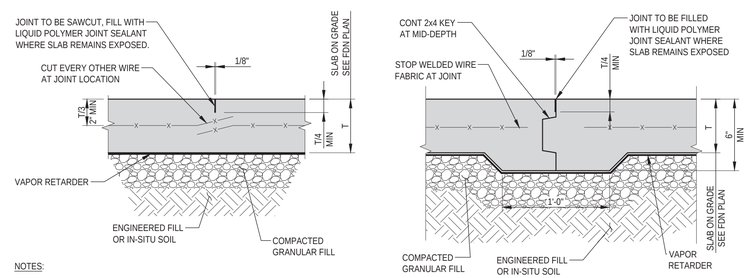

NOTES:

1. JOINTS TO BE LOCATED ON COLUMN CENTER LINES AND AT INTERMEDIATE LOCATIONS AS REQUIRED TO MAINTAIN A MAXIMUM SPACING OF (30 x SLAB THICKNESS) IN EACH DIRECTION, UNO.

2. PROVIDE TOOLED JOINTS IN FRESH CONCRETE EACH SIDE OF WALLS WHERE SLAB POURS THRU DOORWAYS.

CONTROL JOINT

CONSTRUCTION JOINT

N.T.S.

2 TYPICAL JOINT DETAILS

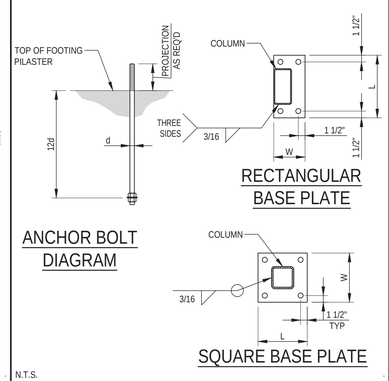

N.T.S.

3 TYPICAL CONSTRUCTION JOINT DETAIL

MASONRY REINFORCING BAR LAP SCHEDULE	
BAR SIZE	LAP
#4	21"
#5	26"
#6	43"
#7	60"

CONCRETE REINFORCING BAR LAP SCHEDULE		
BAR SIZE	LAP	
	TOP	OTHER
#3	28"	22"
#4	37"	29"
#5	47"	36"
#6	56"	43"
#7	81"	63"
#8	93"	72"

N.T.S.

4 BAR LAP SCHEDULES

5 NOT USED

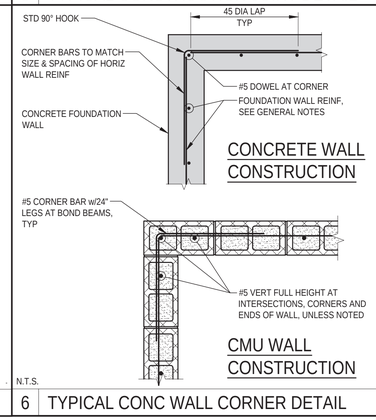

N.T.S.

6 TYPICAL CONC WALL CORNER DETAIL

REVISIONS

1	4
2	5
3	6

AutoZone Store No. 6890
1593 NORTH MAIN STREET
LILLINGTON, NC 27546

GENERAL NOTES, TYPICAL DETAILS & WIND TABLE

DRAWN BY: SMA
DESIGNED BY: CR

AutoZone®

PAUL J. FORD & COMPANY
2727 Paul J. Ford Blvd.
Columbus, OH 43215
Phone 614.221.6679
www.paulford.com
CORP NO. C-2090
A62720-0039

NORTH CAROLINA PROFESSIONAL SEAL 044971 ENGINEER BRIAN WAYNE STARRETT
05/19/2020

05/13/2020

65W2

S0.1

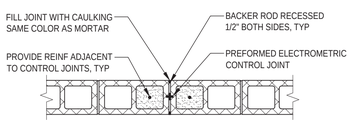

N.T.S.

1 TYP CMU WALL CONTROL JOINT DETAIL

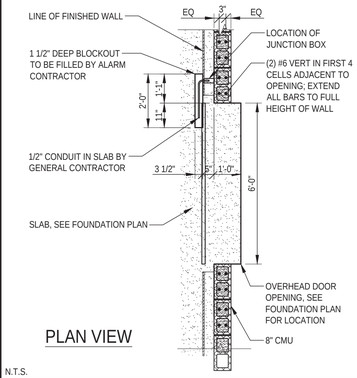

N.T.S.

2 SLAB/ALARM BLOCK-OUT AT OH DOOR

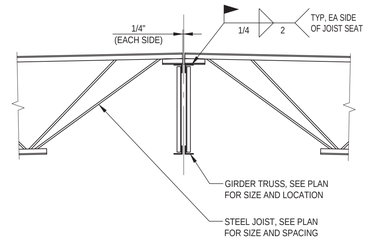

NTS

3 TYPICAL JOIST BRG AT STEEL FRAMING

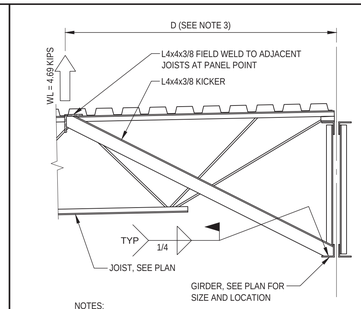

NOTES:
1. KICKERS SHALL BE LOCATED PER PLANS.
2. "WL" DENOTES WIND LOADS (ULTIMATE VALUES).
3. "D" DENOTES MAXIMUM DISTANCE BETWEEN CENTERLINE OF JOIST AND FIRST INTERIOR PANEL POINT OR 44".

NTS

4 TYPICAL FLANGE BRACING DETAIL

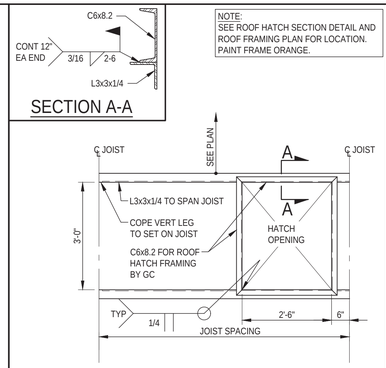

NTS

5 TYPICAL ROOF HATCH OPENING FRAME

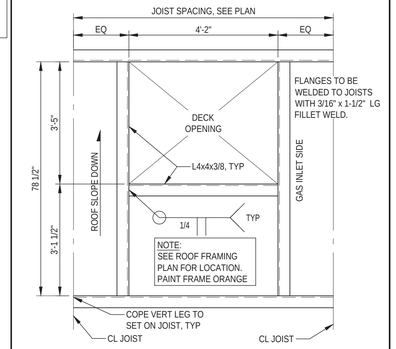

NTS

6 TYPICAL RTU FRAMING PLAN

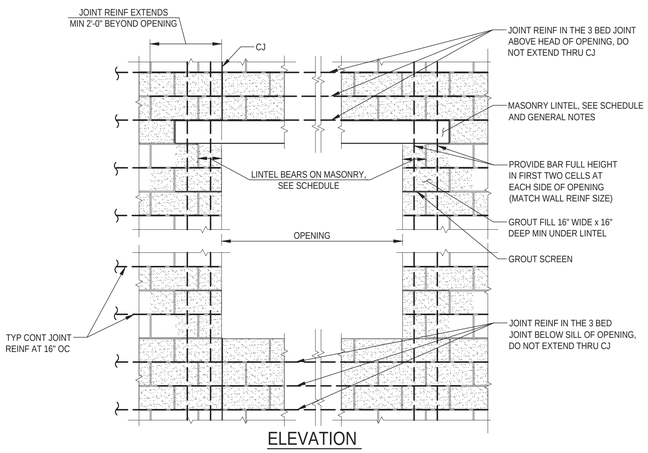

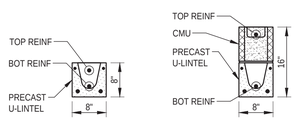

PRECAST CONCRETE LINTEL TYPE 8F8 - 1B/1T BY CAST-CRETE OR EQUIVALENT

PL1

PRECAST CONCRETE LINTEL TYPE 8F16 - 1B/1T BY CAST-CRETE OR EQUIVALENT

PL2

NOTES:
1. LINTEL SHALL BE CONSTRUCTED IN STRICT CONFORMANCE TO MANUFACTURER'S INSTALLATION INSTRUCTIONS.
2. SEE PRECAST CONCRETE LINTEL GENERAL NOTES ON SHEET S0 FOR ADDITIONAL REQUIREMENTS

PRECAST LINTEL SCHEDULE

TYPE	WIDTH	DEPTH	HORIZONTAL REINFORCING	SHEAR REINFORCING	REMARKS
PL1	8"	8"	(2) #4		
PL2	8"	16"	(2) #4		

N.T.S.

7 TYPICAL MASONRY OPENING

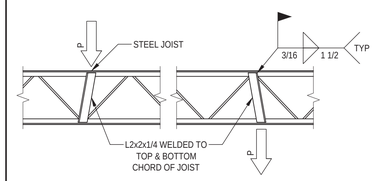

NOTES:
1. "P" IS THE LOCATION OF THE APPLIED CONCENTRATED LOAD.
2. PROVIDED REINFORCING FOR LOADS GREATER THAN 100 POUNDS WHEN LOAD OCCURS BETWEEN JOIST PANEL POINTS.
3. THE END OF THE REINFORCING AT THE LOAD SHALL BE CENTERED ON THE LOAD.
4. THE OPPOSITE END OF THE REINFORCING SHALL BE CENTERED ON THE JOIST PANEL POINT.
5. LOADS SHALL BE ON AXIS OF JOIST. PROVIDE ROOF OPENING FRAMING WHERE REQUIRED.

N.T.S.

8 TYPICAL STEEL JOIST REINFORCING

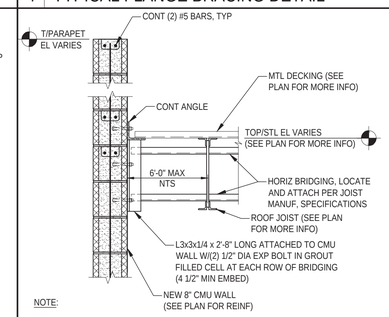

NOTE:
1. JOIST MANUFACTURER SHALL INSTALL HORIZONTAL BRIDGING TO WALL. IF JOIST MANUFACTURER DOES NOT SPECIFY HORIZONTAL BRIDGING SPANNING TO WALL, CONTRACTOR SHALL INSTALL L3x3x1/4 ANGLE TO BE LOCATED AT UNDERSIDE OF DECK. CONTRACTOR SHALL ATTACH DECK TO L3 ANGLE. L3 ANGLE SHALL BE INSTALLED WITH MAXIMUM SPACING OF 6'-0" AND AT FIRST 2 JOIST SPACES BETWEEN JOISTS AND WALL.

N.T.S.

9 TYPICAL BRIDGING TERMINATION DETAIL

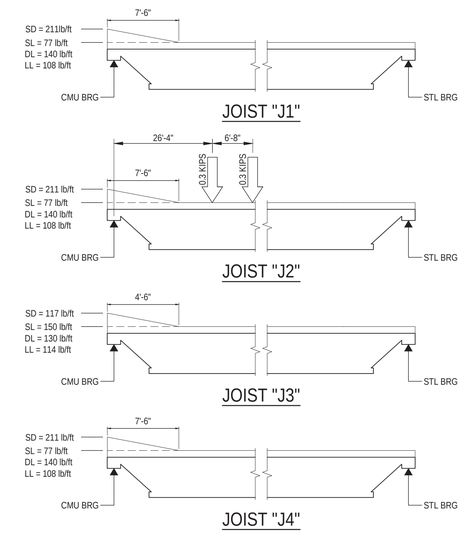

NOTES:
1. "SD" DENOTES SNOW DRIFT.
2. SEE 4/S0.2 FOR ADDITIONAL WIND LOADING FROM FLANGE BRACING AT JOISTS J1 & J2.
3. JOISTS SHALL BE DESIGNED FOR THE FOLLOWING NET UPLIFT LOADS (ULTIMATE VALUES):
   - INTERIOR = 29.2 PSF
   - EDGE = 34.6 PSF
   - CORNER = 34.6 PSF

N.T.S.

12 JOIST LOADING DIAGRAM

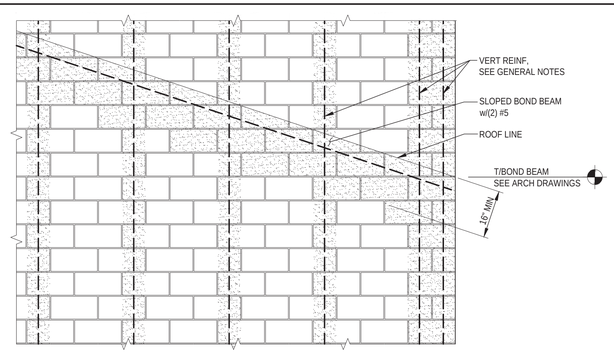

N.T.S.

13 TYPICAL SLOPED WALL BOND BEAMS

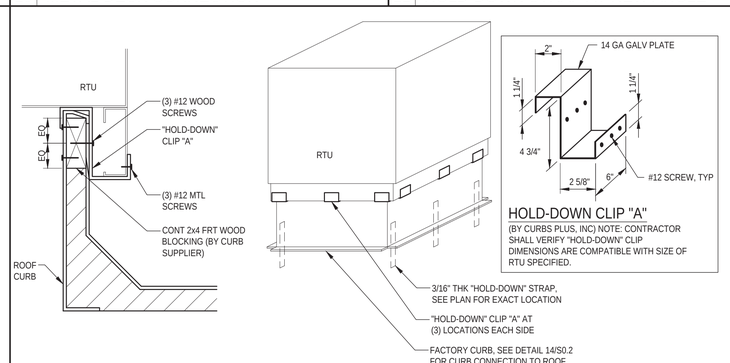

N.T.S.

14 RTU HOLD-DOWN DETAIL

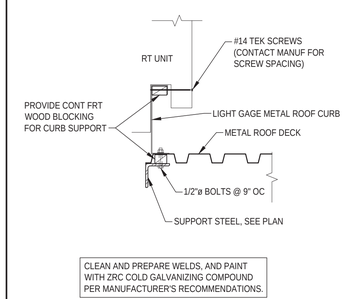

CLEAN AND PREPARE WELDS, AND PAINT WITH ZRC COLD GALVANIZING COMPOUND PER MANUFACTURER'S RECOMMENDATIONS.

N.T.S.

11 HOLD-DOWN STRAP AT NEW ANGLE

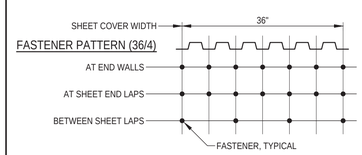

SIDE LAP CONNECTIONS:

DECK TO DECK - (3) #10 SELF TAPPING SHEET METAL SCREWS AT 4 EQUAL SPACES BETWEEN SUPPORTS.

DECK TO EDGE SUPPORT - A. SELF-DRILLING SCREWS (ICBO #3056): #12-24x1 1/4" TEK 5 AND ICH TRAXX 5 HEX HEAD WASHER FOR 1/4" TO 1/2" THICK STEEL SUPPORTS OR
B. POWER ACTUATED FASTENERS (ICBO #4373): HILTI ENP2K, X-EDNK22 OR X-EDN19 SIDELAP FASTENERS SHALL BE #10-16x3/4" TEKS 1

N.T.S.

10 METAL DECK CONNECTION

REVISIONS			
1	2	3	4
			5
			6

AutoZone Store No. 6890
1593 NORTH MAIN STREET
LILLINGTON, NC 27546

TYPICAL DETAILS

DRAWN BY: SMA
DESIGNED BY: CR

AutoZone®

PAUL J. FORD & COMPANY
2800 Fred's Blvd P.O. Box 43215
Phone 614.221.6679 www.paulford.com
A62720-0039 CORP NO. C-2090

NORTH CAROLINA PROFESSIONAL SEAL 044971 ENGINEER BRIAN WAYNE STARRETT
05/19/2020

05/13/2020

65W2

S0.2

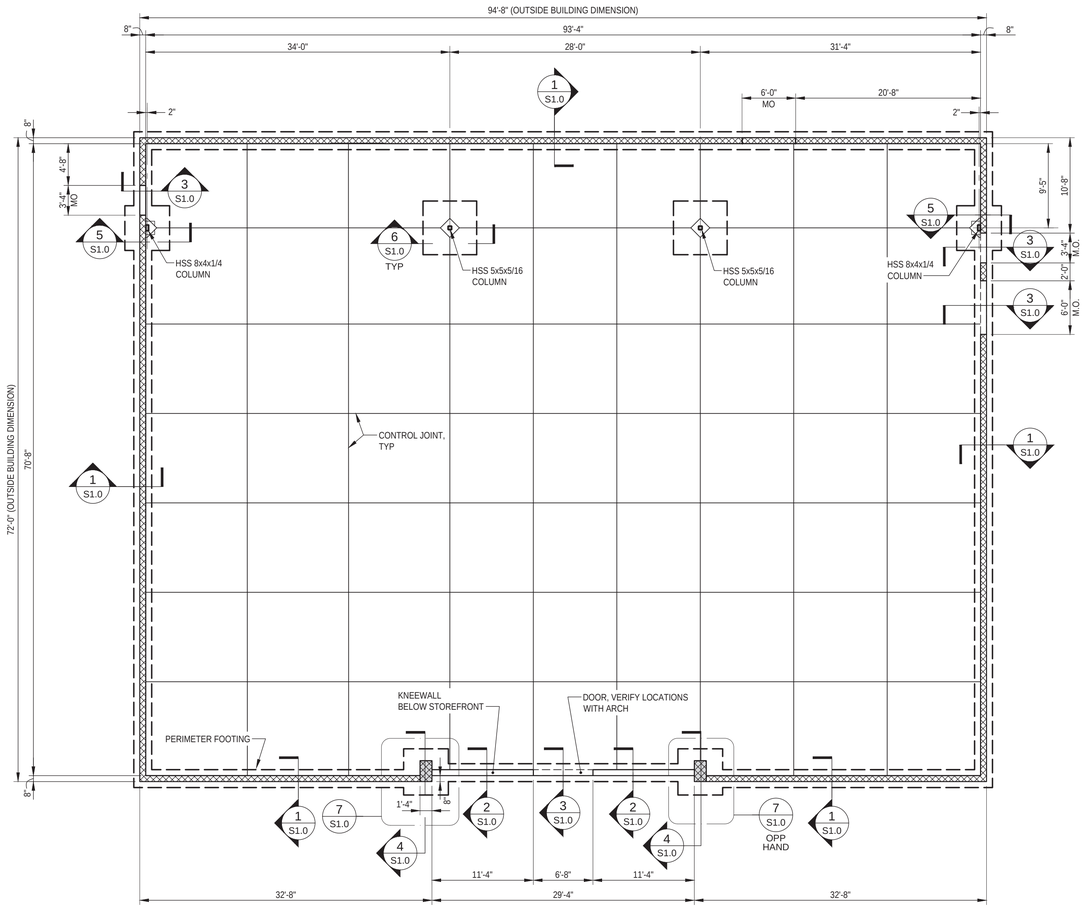

1/8" = 1'-0"

FOUNDATION PLAN

FOUNDATION PLAN NOTES:

1. SEE S0, S0.1 AND S0.2 FOR GENERAL NOTES AND TYPICAL DETAILS.
2. AT PERIMETER OF BUILDING, DIMENSIONS ARE MEASURED TO THE OUTSIDE FACE OF CMU WALL.
3. SEE ARCHITECTURAL DRAWINGS FOR ALL MEASUREMENTS NOT SHOWN. ALL DIMENSIONS SHALL CONFORM TO THE ARCHITECTURAL DRAWINGS.
4. CONTRACTOR SHALL EXERCISE EXTREME CAUTION SO AS NOT TO UNDERMINE, DISTURB, DAMAGE OR, IN ANY WAY, CAUSE UNDESIRABLE MOVEMENT, CRACKING, AND/OR SETTLEMENT OF THE ADJACENT CONSTRUCTION.
5. TOP OF SLAB ELEVATION = 0'-0".
   FLOOR CONSTRUCTION: 5" CONCRETE SLAB-ON-GRADE WITH 6X6-W1.4XW1.4 WWF OR FIBERMESH. (SEE SPECIFICATIONS FOR FIBERMESH REQUIREMENTS). MAINTAIN MESH ELEVATION AT ONE HALF THE THICKNESS OF THE SLAB. PLACE SLAB OVER A 10 MIL. POLYETHYLENE VAPOR BARRIER OVER 4" COMPACTED GRANULAR FILL.
6. CONTRACTOR SHALL COORDINATE SLAB FINISHES AND SLOPES WITH ARCH AND CIVIL/SITE DRAWINGS.
7. FOR CONTRACTION JOINTS, SAW CUT ONE QUARTER SLAB THICKNESS, TYPICAL. SEE TYPICAL CONTRACTION JOINT DETAILS ON SHEET S0.1.
8. TOP OF FOOTING ELEVATION SHALL BE -0'-10", TYP, UNO.
9. BOTTOM OF FOOTING DETAILS SHOWN ARE BASED UPON FOUNDATIONS BEARING ON MATERIALS AS LISTED IN FOUNDATION GENERAL NOTE NO. 2 ON SHEET S0. BEARING ELEVATIONS HAVE BEEN ESTABLISHED FROM THE GRADING PLAN AND SOILS REPORT. FOUNDATION BEARING SURFACES MUST BE INSPECTED AND APPROVED IN ACCORDANCE WITH FOUNDATION GENERAL NOTE NO. 4 ON SHEET S0 AND BOTTOM OF FOOTING ELEVATIONS ADJUSTED ACCORDINGLY.
10. WALLS SHALL BE CENTERED ON FOOTING, UNO.
11. COORDINATE LOCATION AND SIZE OF PENETRATIONS AND OPENINGS WITH MECHANICAL AND SITE DRAWINGS. NO PENETRATIONS SHALL DISTURB THE FOUNDATIONS.
12. EXTERIOR PAVEMENT IS NOT SHOWN FOR CLARITY. SEE CIVIL/ARCH DRAWINGS FOR LOCATIONS AND DIMENSIONS.

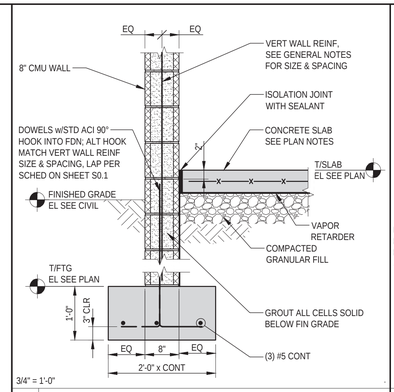

3/4" = 1'-0"

1 SECTION AT CMU WALL (MASONRY)

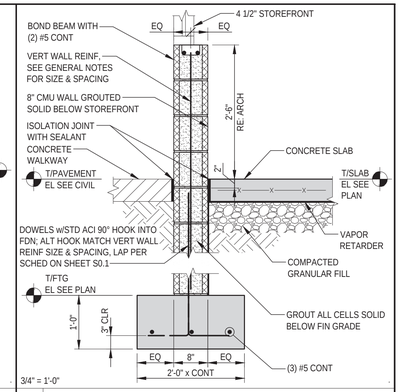

3/4" = 1'-0"

2 SECTION AT STOREFRONT (MASONRY)

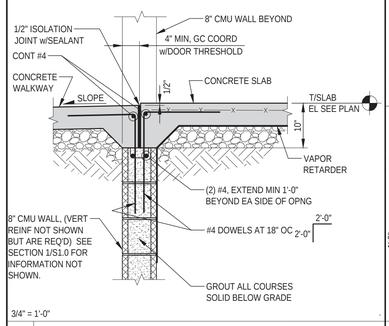

3/4" = 1'-0"

3 SECTION AT DOOR (MASONRY)

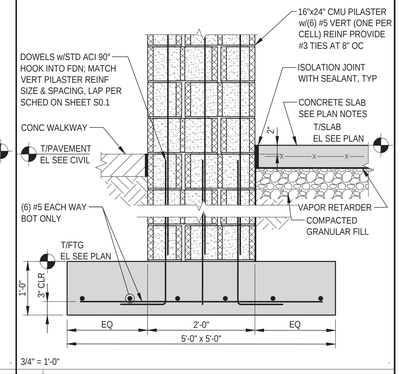

3/4" = 1'-0"

4 SECTION AT PILASTER (MASONRY)

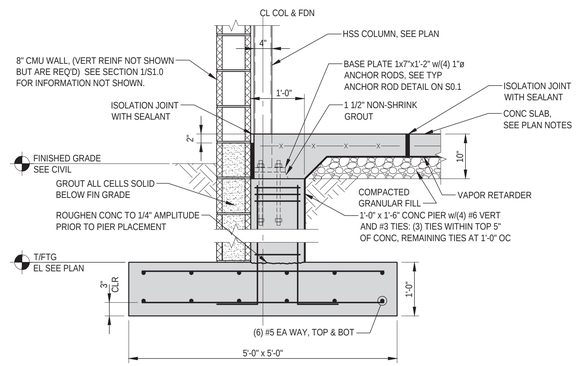

3/4" = 1'-0"

5 SECTION AT WALL COLUMN (MASONRY)

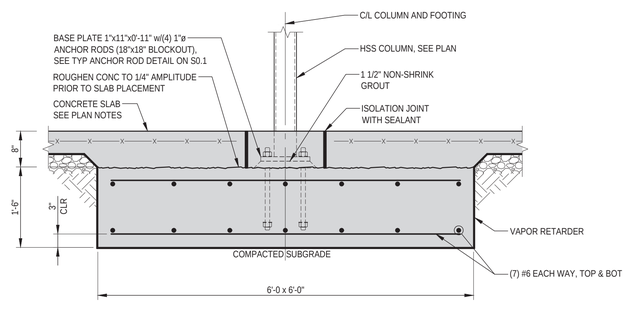

3/4" = 1'-0"

6 INTERIOR COLUMN SECTION

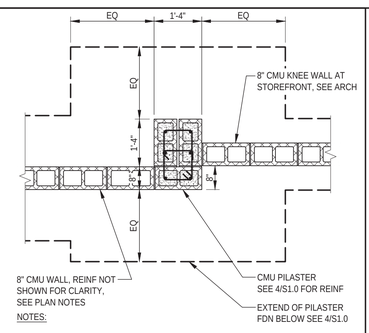

NOTES:

1. CMU KNEEWALL, REINF NOT SHOWN FOR CLARITY, SEE 2/S1.0
2. SLAB NOT SHOWN FOR CLARITY.

NTS

7 PLAN AT EXTERIOR PILASTER

REVISIONS	
1	4
2	5
3	6

AutoZone Store No. 6890
1593 NORTH MAIN STREET
LILLINGTON, NC 27546

FOUNDATION PLAN & SECTIONS

DRAWN BY: SMA
DESIGNED BY: CR

AutoZone®

PAUL J. FORD & COMPANY
2892 East Sixth Avenue, Columbus, OH 43215
Phone 614.221.6679 www.paulfordco.com
CORP NO. C-2090
A62720-0039

NORTH CAROLINA PROFESSIONAL SEAL 044971 ENGINEER BRIAN WAYNE STARRETT
05/19/2020

05/13/2020

65W2

S1.0

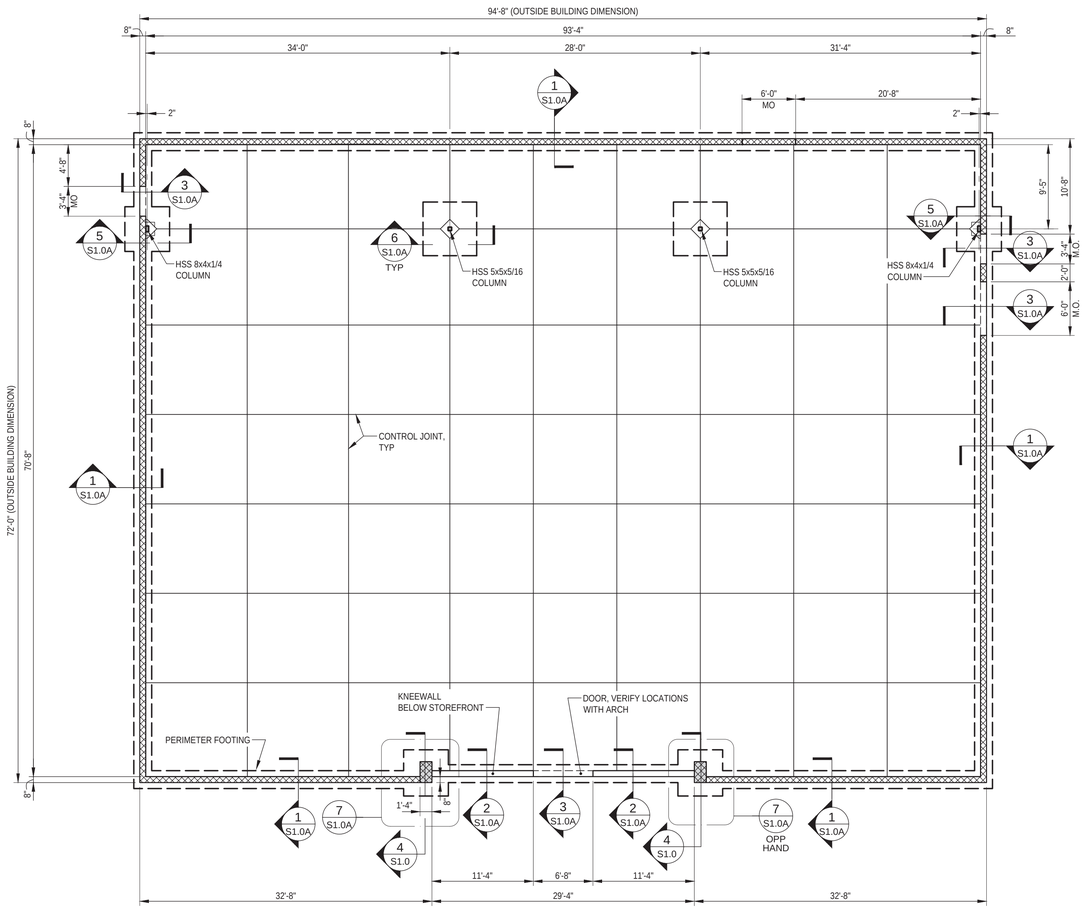

1/8" = 1'-0"

FOUNDATION PLAN

FOUNDATION PLAN NOTES:

1. SEE S0, S0.1 AND S0.2 FOR GENERAL NOTES AND TYPICAL DETAILS.
2. AT PERIMETER OF BUILDING, DIMENSIONS ARE MEASURED TO THE OUTSIDE FACE OF CMU WALL.
3. SEE ARCHITECTURAL DRAWINGS FOR ALL MEASUREMENTS NOT SHOWN. ALL DIMENSIONS SHALL CONFORM TO THE ARCHITECTURAL DRAWINGS.
4. CONTRACTOR SHALL EXERCISE EXTREME CAUTION SO AS NOT TO UNDERMINE, DISTURB, DAMAGE OR, IN ANY WAY, CAUSE UNDESIRABLE MOVEMENT, CRACKING, AND/OR SETTLEMENT OF THE ADJACENT CONSTRUCTION.
5. TOP OF SLAB ELEVATION = 0'-0".
   FLOOR CONSTRUCTION: 5" CONCRETE SLAB-ON-GRADE WITH 6X6-W1.4XW1.4 WWF OR FIBERMESH. (SEE SPECIFICATIONS FOR FIBERMESH REQUIREMENTS). MAINTAIN MESH ELEVATION AT ONE HALF THE THICKNESS OF THE SLAB. PLACE SLAB OVER A 10 MIL. POLYETHYLENE VAPOR BARRIER OVER 4" COMPACTED GRANULAR FILL.
6. CONTRACTOR SHALL COORDINATE SLAB FINISHES AND SLOPES WITH ARCH AND CIVIL/SITE DRAWINGS.
7. FOR CONTRACTION JOINTS, SAW CUT ONE QUARTER SLAB THICKNESS, TYPICAL. SEE TYPICAL CONTRACTION JOINT DETAILS ON SHEET S0.1.
8. TOP OF FOOTING ELEVATION SHALL BE -0'-10", TYP, UNO.
9. BOTTOM OF FOOTING DETAILS SHOWN ARE BASED UPON FOUNDATIONS BEARING ON MATERIALS AS LISTED IN FOUNDATION GENERAL NOTE NO. 2 ON SHEET S0. BEARING ELEVATIONS HAVE BEEN ESTABLISHED FROM THE GRADING PLAN AND SOILS REPORT. FOUNDATION BEARING SURFACES MUST BE INSPECTED AND APPROVED IN ACCORDANCE WITH FOUNDATION GENERAL NOTE NO. 4 ON SHEET S0 AND BOTTOM OF FOOTING ELEVATIONS ADJUSTED ACCORDINGLY.
10. WALLS SHALL BE CENTERED ON FOOTING, UNO.
11. COORDINATE LOCATION AND SIZE OF PENETRATIONS AND OPENINGS WITH MECHANICAL AND SITE DRAWINGS. NO PENETRATIONS SHALL DISTURB THE FOUNDATIONS.
12. EXTERIOR PAVEMENT IS NOT SHOWN FOR CLARITY. SEE CIVIL/ARCH DRAWINGS FOR LOCATIONS AND DIMENSIONS.

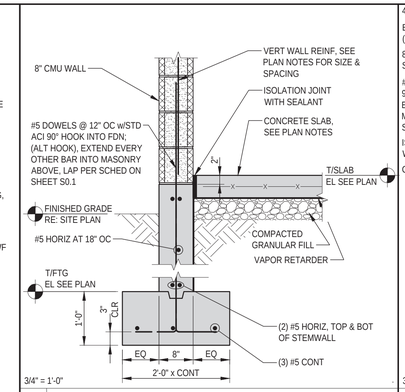

1 SECTION AT CMU WALL (CONCRETE)

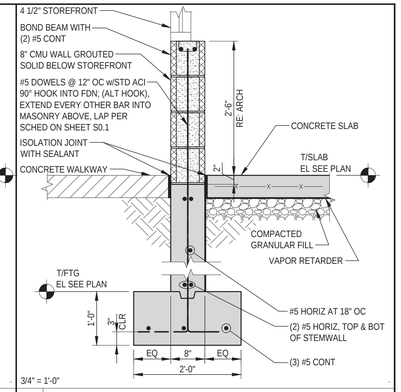

2 SECTION AT STOREFRONT (CONCRETE)

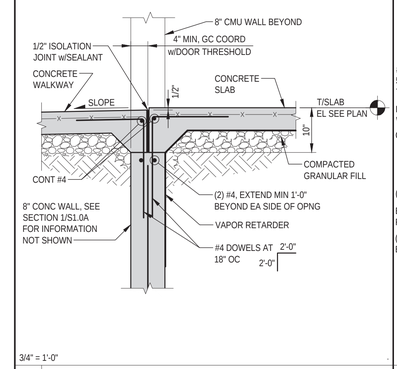

3 SECTION AT DOOR (CONCRETE)

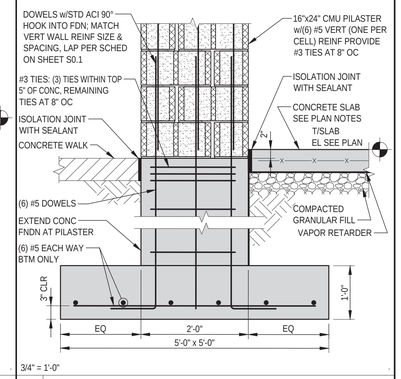

4 SECTION AT PILASTER (CONCRETE)

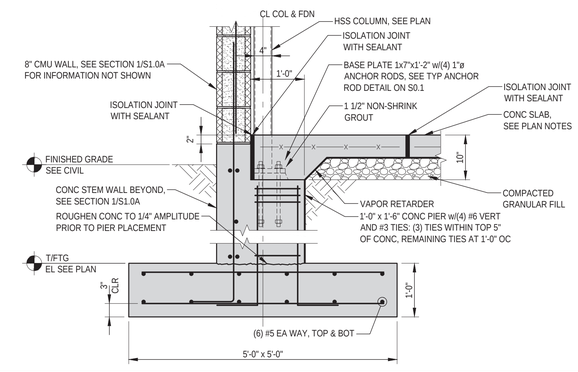

5 SECTION AT WALL COLUMN (CONCRETE)

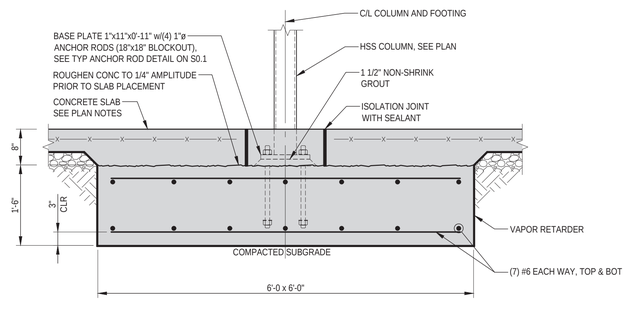

6 INTERIOR COLUMN SECTION

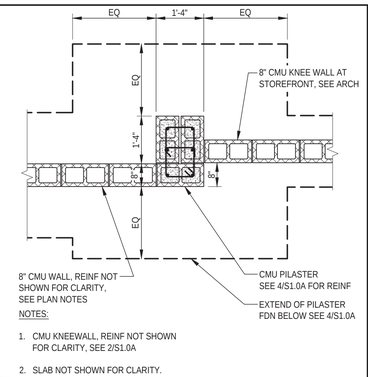

NOTES:

1. CMU KNEEWALL, REINF NOT SHOWN FOR CLARITY, SEE 2/S1.0A
2. SLAB NOT SHOWN FOR CLARITY.

NTS

7 PLAN AT EXTERIOR PILASTER

REVISIONS	
1	4
2	5
3	6

AutoZone Store No. 6890
1593 NORTH MAIN STREET
LILLINGTON, NC 27546

FOUNDATION PLAN & SECTIONS

DRAWN BY: SMA
DESIGNED BY: CR

AutoZone®

PAUL J. FORD & COMPANY
2307 Bond St Suite 100 Columbus OH 43215
Phone 614.221.6679 www.paulford.com
A62720-0039 CORP NO. C-2090

NORTH CAROLINA PROFESSIONAL SEAL 044971 ENGINEER BRIAN WAYNE STARRETT
05/19/2020

05/13/2020

65W2

S1.0A

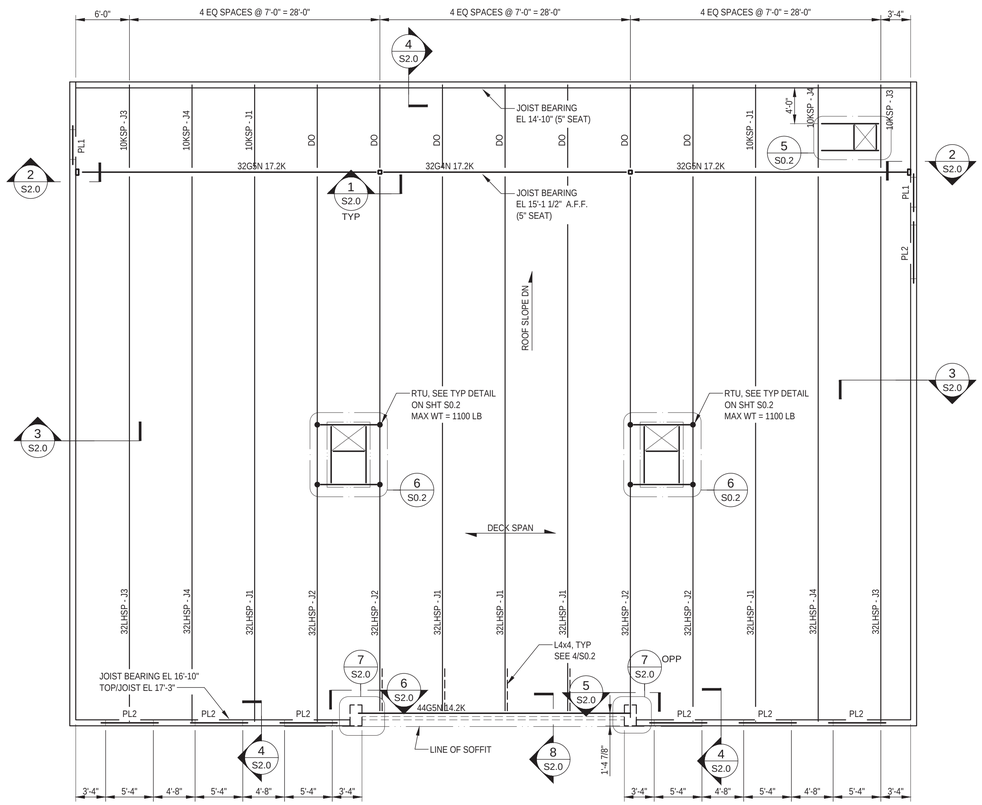

1/8" = 1'-0"

ROOF FRAMING PLAN

ROOF PLAN NOTES:

1. SEE S0 FOR GENERAL NOTES AND S0.2 FOR TYPICAL DETAILS.
2. SEE ARCHITECTURAL DRAWINGS FOR ALL MEASUREMENTS NOT SHOWN. ALL DIMENSIONS SHALL CONFORM TO THE ARCHITECTURAL DRAWINGS.
3. COORDINATE ALL ROOF PENETRATIONS WITH ARCHITECTURAL, MECHANICAL, ELECTRICAL AND PLUMBING SHEETS.
4. SEE ARCHITECTURAL AND MECHANICAL SHEETS FOR EQUIPMENT WEIGHTS AND LOCATIONS NOT INDICATED.
5. TOP OF ROOF ELEVATION VARIES, SEE PLAN.
6. TOP OF PARAPET ELEVATION = 20'-10", UNLESS NOTED OTHERWISE.
7. STEEL MANUFACTURER SHALL COORDINATE LOCATION OF BOLT HOLES FOR JOIST ENDS DUE TO OSHA REQUIREMENTS WITH JOIST MANUFACTURER.
8. STEEL JOISTS, BRIDGING, AND METAL ROOF DECK SHALL BE FURNISHED BY AUTOZONE. ALL REMAINING ITEMS SHALL BE SUPPLIED AND INSTALLED BY THE GENERAL CONTRACTOR.
9. METAL ROOF DECK SHALL BE GALVANIZED. SEE GENERAL NOTES FOR SIZE AND TYPICAL DETAILS FOR CONNECTION TO THE SUPPORTING STRUCTURE.
10. J# INDICATES SPECIAL JOIST LOADING REQUIREMENTS. SEE SHEET S0.2 FOR JOIST LOADING DIAGRAMS.
11. ALL JOISTS SHALL HAVE A 5 INCH DEEP SEATS, UNO.
12. JOIST MANUFACTURER SHALL NOT USE 1/3 INCREASE FOR DESIGNATED WIND OR SEISMIC LOADING.
13. BRIDGING IS NOT SHOWN FOR CLARITY BUT SHALL BE INSTALLED PER JOIST MANUFACTURER ERECTION DRAWINGS AND SPECIFICATIONS. SEE DETAIL 9/S0.2 FOR ADDITIONAL INFORMATION.
14. PL# INDICATES PRECAST LINTEL. SEE SHEET S0.2 FOR ADDITIONAL INFORMATION.

NORTH

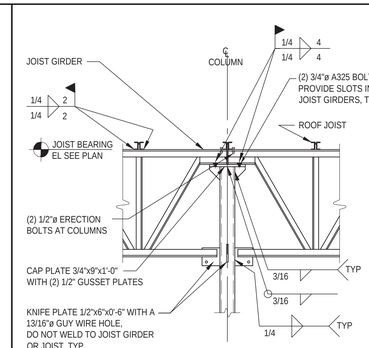

1/2" = 1'-0"

1 GIRDER AT INTERIOR COL CONNECTION

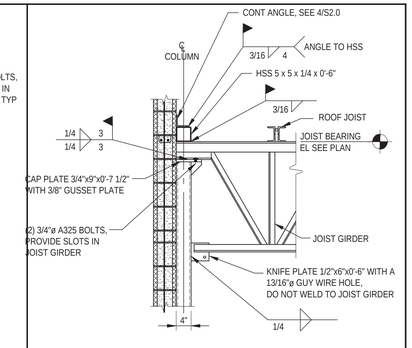

1/2" = 1'-0"

2 GIRDER BEARING AT WALL COLUMN

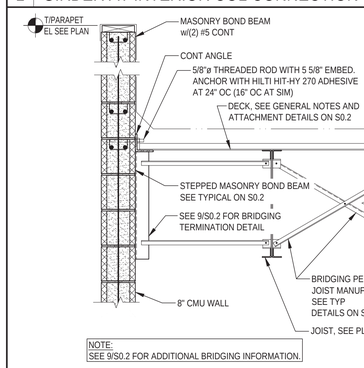

3/4" = 1'-0"

3 DECK/BEARING AT WALL

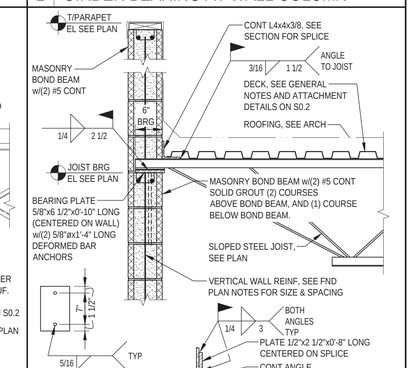

3/4" = 1'-0"

4 JOIST BEARING AT WALL

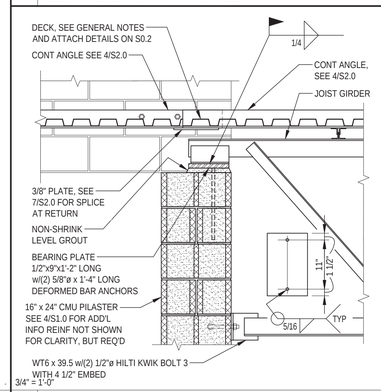

3/4" = 1'-0"

5 JOIST BEARING AT PILASTER

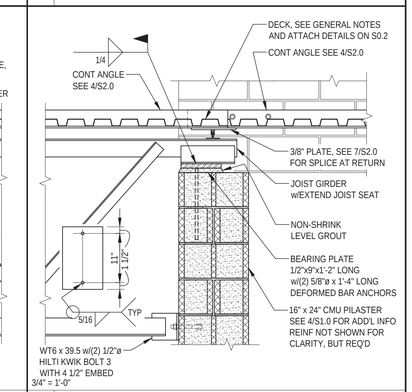

3/4" = 1'-0"

6 JOIST BEARING AT PILASTER

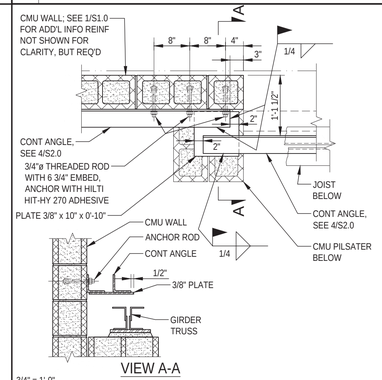

3/4" = 1'-0"

7 PERIMETER ANGLE SPLICE AT RETURN

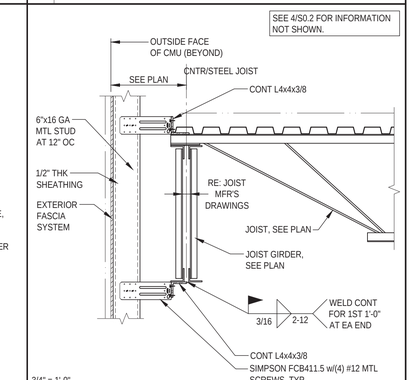

3/4" = 1'-0"

8 FASCIA/GIRDER CONNECTION

REVISIONS	
1	
2	
3	
4	
5	
6	

AutoZone Store No. 6890
1593 NORTH MAIN STREET
LILLINGTON, NC 27546

ROOF FRAMING PLAN AND SECTIONS

DRAWN BY: SMA
DESIGNED BY: CR

AutoZone®

PAUL J. FORD & COMPANY
280 East Broad St. Suite 600
Columbus, OH 43215
Phone 614.221.8679
www.paulfford.com
A62720-0039
CORP NO. C-2090

NORTH CAROLINA PROFESSIONAL SEAL 044971 ENGINEER BRIAN WAYNE STARRETT
05/19/2020

05/13/2020

65W2

S2.0

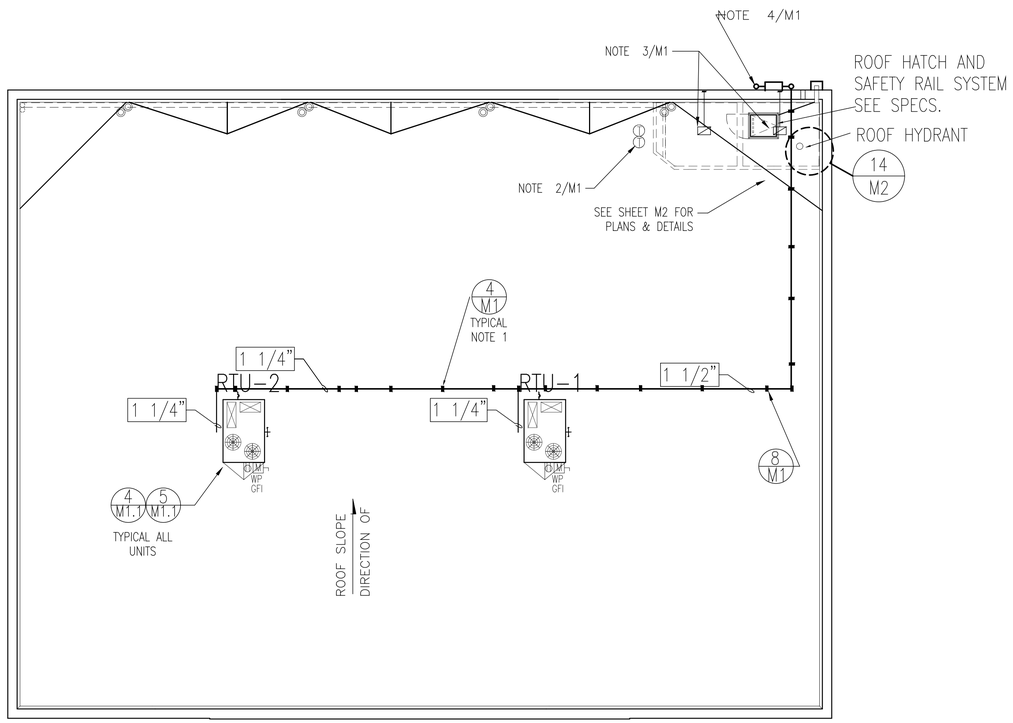

1/8" = 1'-0"

1 HVAC ROOF TOP PLAN

MECHANICAL NOTES
DESIGN PARAMETERS

MECHANICAL CODE: 2018 INTERNATIONAL MECHANICAL CODE

OUTSIDE AIR REQUIREMENTS:
OCCUPANCY CLASSIFICATION – RETAIL (SALES)
BUILDING AREA FOR OCCUPANCY – 6,446 SQUARE FEET
OCCUPANT LOAD – 6,446 / 1000 x 15 = 97 PEOPLE
OCCUPANT OUTSIDE AIR – 98 x 7.5 CFM = 728
AREA OUTSIDE AIR – 6,446 x .12 CFM = 774 CFM
TOTAL OUTSIDE AIR REQUIRED – 728 CFM + 774 CFM = 1,502 CFM

GENERAL MECHANICAL NOTES

A. ALL DUCTWORK IS EXPOSED IN THE CONDITIONED SPACE AND DOES NOT REQUIRE ANY INSULATION. THE DUCTWORK PACKAGE AND AIR DEVICES WILL BE FURNISHED BY AUTOZONE FOR INSTALLATION BY THE CONTRACTOR.

B. THE FIRESTATS, SMOKE DETECTORS, FRESH AIR INTAKES AND/OR ECONOMIZERS WILL BE PROVIDED, AS REQUIRED BY LOCAL CODE, BY AUTOZONE FOR INSTALLATION BY THE CONTRACTOR.

C. THE PACKAGE ROOF MOUNTED HEATING / COOLING UNITS, ROOF CURBS, AND VENSTAR THERMOSTATS WILL BE FURNISHED BY AUTOZONE FOR INSTALLATION BY THE CONTRACTOR. SEE SCHEDULE ON SHEET M-1.1 FOR THE AIR FLOW FOR EACH UNIT SCHEDULED. PRIOR TO ACTIVATING ANY RTU PLACE ALL OPERATING MANUALS AND LITERATURE IN THE PHONE/ALARM CLOSET FOR USE BY THE OWNER.

D. THE TOILET EXHAUST FAN WILL BE FURNISHED BY AUTOZONE FOR INSTALLATION BY THE CONTRACTOR. THE FAN IS A BROAN NO. 503 WITH 160 CFM CAPACITY. CONTRACTOR TO FURNISH AND INSTALL METAL DUCT AND WALL CAP.

E. THE THERMOSTATS SHALL BE SET FOR 78° F IN THE COOLING MODE AND 68° F IN THE HEATING MODE.

F. THE FLEXIBLE GAS CONNECTION TO EACH UNIT TO BE NO MORE THAN 2'-0" LONG.

G. CONTRACTOR SHALL STENCIL RTU NUMBER ON ALL ROOFTOP UNITS. STENCILING SHALL BE ON ROOF HATCH SIDE ONLY.

H. REFER TO SHEET A1 FOR BUILDING DIMENSIONS AND S2 FOR HVAC LOCATIONS.

I. ALL ABOVE GROUND WATER SUPPLY PIPING SHALL BE INSULATED.

J. ATTACH LIGHTING CONTROL PANEL PHOTOCELL TO THE NORTH FACING SIDE OF ONE OF THE ROOF TOP HVAC UNITS. DO NOT ATTACH PHOTOCELL TO A REMOVABLE PANEL. CONNECT PHOTOCELL THROUGH ONE OF THE HVAC UNIT HUBS – DO NOT DRILL A HOLE IN THE BOTTOM OF THE UNIT – TO A JUNCTION BOX MOUNTED ON THE UNDERSIDE OF THE ROOF DECK AND THEN ON TO THE LIGHTING CONTROL PANEL. SEE SHEETS M-1.1 AND E-6 FOR ADDITIONAL INFORMATION.

3/32" = 1'-0" MGN01

3 MECHANICAL NOTES

A. THE EQUIPMENT AND MATERIALS FOR THIS PROJECT HAVE BEEN SPECIFICALLY SELECTED FOR THIS APPLICATION. MANY ITEMS FOUND IN THE HVAC PACKAGE ARE UNIQUE TO AUTOZONE. THE HVAC PACKAGE WILL BE FURNISHED TO THE CONTRACTOR FOR INSTALLATION, START-UP, AND SYSTEM VERIFICATION.

B. THE INSTALLING CONTRACTOR IS RESPONSIBLE FOR PROVIDING A COMPLETE SYSTEM THAT CONFORMS TO THE PLANS AND SPECIFICATIONS.

C. ALL DAMAGE AND / OR WARRANTY CLAIMS ARE SUBJECT TO INSPECTION AND REVIEW BY BOTH AUTOZONE AND THE EQUIPMENT MANUFACTURER. SEE NOTES ON SHEET M-1.1 FOR FURTHER INFORMATION REGARDING DAMAGE AND WARRANTY CLAIMS. FILING OF A CLAIM DOES NOT RELIEVE THE HVAC CONTRACTOR OF HIS RESPONSIBILITIES DESCRIBED ABOVE AND IN THE SPECIFICATIONS TO PROVIDE A COMPLETE AND FINISHED SYSTEM.

D. FIRESTATS, SMOKE DETECTORS, DUCT SENSORS AND REMOTE THERMOSTATS TO BE INSTALLED ACCORDING TO THE MANUFACTURERS' SPECIFICATIONS AND INSTRUCTIONS.

E. ROOFTOP UNITS MAY CONTAIN ONE OR MORE OF THE FOLLOWING ITEMS DEPENDENT ON PROJECT GEOGRAPHIC LOCATION AND CODE REQUIREMENTS: ECONOMIZER, HAIL GUARDS, CORROSION PROTECTION, HORN AND STROBE UNITS, ETC.

F. CUT NO HOLES IN BOTTOM PAN OF ROOFTOP UNIT. CONTRACTOR TO USE FACTORY INSTALLED HUB LOCATIONS TO RUN POWER AND/OR CONTROL WIRING.

1/8" = 1'-0" MHN02

5 HVAC PACKAGE NOTES

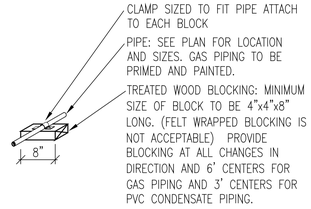

3/4" = 1'-0" MHI01

4 PIPE SUPPORT

1. SUPPORT ALL PIPING ON TREATED 2"X4" WOOD BLOCKING SET DIRECTLY ON ROOFING, AND CLAMP PIPE TO EACH SUPPORT. BLOCKING SHALL BE SPACED A MAXIMUM OF 6'-0" ON CENTER FOR GAS PIPE AND 3'-0" FOR PVC PIPE. PROVIDE ADDITIONAL SUPPORTS AT EACH BEND AND "T" CONNECTION.
2. MOUNT TWO (2) THERMOSTATS ON THE WALL – SEE SHEET E5.
3. CONTRACTOR TO FURNISH & INSTALL METAL EXHAUST DUCT AND METAL WALL CAP FOR EACH BATHROOM EXHAUST FAN, RUN DUCT WORK IN CEILING JOIST SPACE. SEE ELECTRICAL SHEETS FOR FAN LOCATION AND SPECIFICATIONS FOR ADDITIONAL INFORMATION..
4. COORDINATE WITH THE LOCAL UTILITY COMPANY FOR GAS METER LOCATION AND GAS PIPE SIZES. REFER TO THE SCHEDULE ON SHEET M-1 FOR MAXIMUM ESTIMATED LOAD.

1/8" = 1'-0" MHN01

6 HEATING & COOLING PLAN NOTES

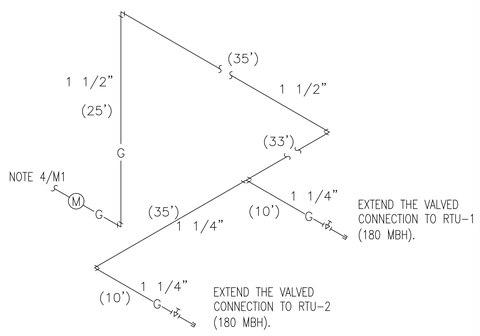

NOTE:
THE OVER ALL LENGTH OF PIPE USED TO CALCULATE PIPE SIZE IS 140 MULTIPLIED BY 1.25 FOR TURNS AND ELBOWS TO GIVE A TOTAL DEVELOPED LENGTH OF 175 FEET. THE TABLE USED TO SIZE THE GAS PIPING IS TABLE 402.4(2) OF THE INTERNATIONAL FUEL GAS CODE. TOTAL MBH OF THIS PROJECT IS 360 MBH.

8 GAS RISER

INDICATES ROOF OPENING
CONDENSATE DRAIN
THERMOSTAT
WP GFI WEATHERPROOF GFI OUTLET
M ELECTRICAL DISCONNECT
DW DOMESTIC WATER
GAS INLET

1/8"=1'-0" MHL01

2 HVAC LEGEND

MARK	BRAND	MODEL	CFM @ 1/8"S.P.	SONES	ELEC. REQUIREMENT	COMMENTS
TEF-1	BROAN	503	160	5	120V-1PH-60HZ	INTERLOCK WITH LIGHT CONTROL
TEF-2	BROAN	503	160	5	120V-1PH-60HZ	INTERLOCK WITH LIGHT CONTROL

NOTE:
CONTRACTOR SHALL FURNISH AND INSTALL AN 8" METAL DUCT AND METAL WALL CAP. THE WALL CAP SHALL HAVE A BACK-DRAFT DAMPER AND INSECT SCREEN.

7 TOILET EXHAUST FAN SCHEDULE

REVISIONS

1	2	3	4	5	6

AutoZone Store No. 6890
1593 N. MAIN ST.
LILLINGTON, NC 27546
HEATING AND COOLING

ENGINEER: DANNY E. DOSS P.E.
132 Kelley Drive
Rogers, Arkansas 72756
TEL: (479) 631-1712 FAX: (479) 631-1854
For Bidding & Contractor Information Contact:
Dodge Data & Analytics. Tel. 413-930-4215
Cindy.searcy@construction.com

05/06/20

65W2-R

M-1

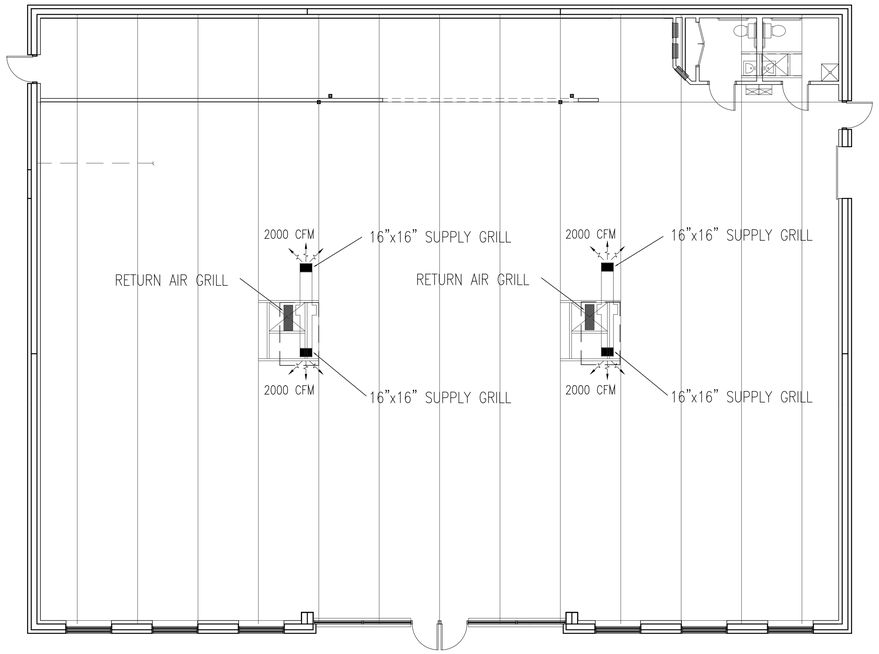

PACKAGE DUCTWORK NOTES:
1. PACKAGE DUCTWORK IS FURNISHED BY AUTOZONE AND INSTALLED BY CONTRACTOR.
2. THE BOTTOM OF THE DUCTS ARE TO BE NO LOWER THAN THE BOTTOM OF THE ROOF JOISTS.
3. DUCTWORK IS 22ga. STEEL INTERNALLY INSULATED.
4. DUCTWORK IS SHIPPED K/D DISASSEMBLED, CONTRACTOR TO ASSEMBLE IN THE FIELD.
5. SUPPLY REGISTERS ARE SINGLE DEFLECTION WITH CURVED ADJUSTABLE BLADES.
6. FACE BARS ON GRILLES ARE ADJUSTABLE TO CUSTOMIZE THE THROW AND PROFILE.
7. GRILLES ARE DESIGNED TO THROW 24 FEET AT 450 CFM
8. DUCT PACKAGE IS DESIGNED TO HANDLE 1600 – 2400 CFM WITH .03 STATIC PRESSURE DROP (ALL GRILLES).
9. RETURN GRILL IS 1/2" STANDARD EXPANDED METAL WITH GASKET.

1/8" = 1'–0"

1 POWER PLAN

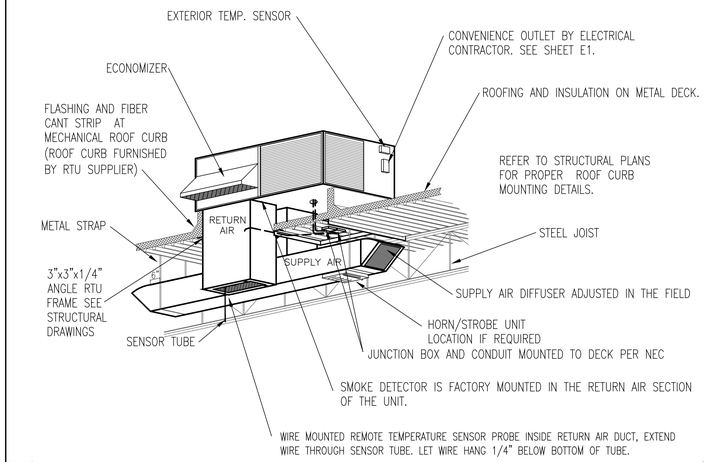

No Scale MHI02

4 ROOFTOP UNIT – VIEW OF RTU

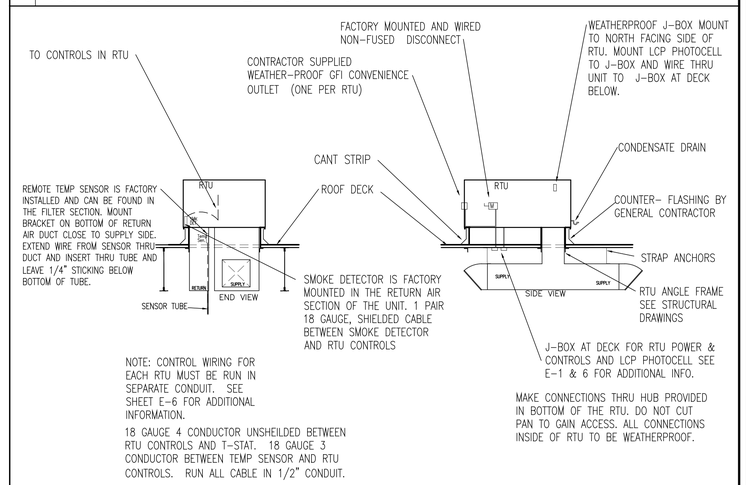

No Scale MHS01

5 ROOF CURB

1. YORK ROOF TOP UNITS WILL BE FURNISHED TO THE JOB SITE ON A SCHEDULED DELIVERY BASIS. THE CURBS, DUCT DROP AND DUCT PACKAGES WILL COME SEPARTELY FROM A THIRD PARTY YORK VENDOR. ALL ITEMS MUST BE REQUESTED WITH A NEEDED DELIVERY DATE IN THE AFI SCHEDULE REQUEST FORM AND SENT TO THE VENDOR AS SOON AS THE JOB NTP'S.
2. ONCE CONSTRUCTION HAS COMMENCED IT WILL BE THE GENERAL CONTRACTOR'S RESPONSIBILITY TO STAY IN TOUCH WITH THE YORK CONTACT AND TO SCHEDULE THE ACTUAL DATE THE ROOF TOP UNIT ARE TO BE DELIVERED TO THE JOB SITE.
3. IT IS EXPECTED THAT WHEN UNITS ARE DELIVERED THEY WILL GO FROM TRUCK TO ROOF AND NOT BE LEFT ON THE GROUND. IF THE JOB SCHEDULE WILL NOT ACCOMMODATE THE ORIGINAL REQUESTED DELIVERY DATE THEN THE GENERAL CONTRACTOR MUST CALL YORK AND RESCHEDULE. UNITS ARE NOT TO BE LEFT ON THE GROUND WHERE THEY MAY BE SUBJECT TO DAMAGE.
4. WHEN UNITS ARRIVE THEY SHOULD BE INSPECTED FOR DAMAGE, AS THE AUTOZONE POLICY ONLY ALLOWS THE GENERAL CONTRACTOR 72 HOURS TO REPORT DAMAGE OR ANY PROBLEM, AFTER WHICH THE ISSUE BECOMES THE CONTRACTORS TO RESOLVE. IF THE DAMAGE IS SUPERFICIAL OR COSMETIC THEN THE UNITS SHOULD BE ACCEPTED, INSTALLED AND REPAIRED IN THE FIELD. IF THE DAMAGE AFFECTS THE OPERATION OF THE UNIT THEN IT SHOULD BE NOTED ON THE BILL OF LADING, NOTIFY YORK TO SCHEDULE A REPLACEMENT AND PICK–UP, AND NOTIFY THE AUTOZONE AFI MANAGER. SEE AUTOZONE AFI POLICY FOR ADDITIONAL INFORMATION.
5. CONTACTS:
TO SCHEDULE DELIVERY: SHAWNA STEPHENS 405–419–6272
TO REPORT DAMAGE: SHAWNA STEPHENS 405–419–6272
FOR TECHNICAL SUPPORT: LEROY BERRY 800–481–9738 OPTION 4
AUTOZONE AFI MANAGER: LEW ELLIS 901–495–8707

1/8" = 1'–0" MHN03

2 YORK HVAC NOTES

1. DOA (Dead on Arrival): LABOR ALLOWANCES APPLY ONLY TO THOSE SITUATIONS WHERE DEFECTS HAVE OCCURRED DIRECTLY AS A RESULT OF FACTORY WORKMANSHIP AND/OR MATERIALS. REIMBURSEMENT WILL NOT BE ALLOWED WHERE DAMAGE HAS BEEN SUSTAINED AS A RESULT OF MISAPPLICATION OR IMPROPER INSTALLATION.
2. FOR ALL DOA AND ANY OTHER WARRANTY ISSUES THE CONTRACTOR SHALL CALL THE YORK WARRANTY GROUP FOR INSTRUCTIONS ON HOW TO PROCEED. YORK WILL RESPOND TO ALL WARRANTY REQUESTS OR ISSUES WITHIN 24 HOURS. PROCEEDING WITH WORK IN ADVANCE OF NOTIFYING YORK MAY RESULT IN CONTRACTOR NOT BEING REIMBURSED FOR ALL OF HIS COSTS.
3. AS YORK HAS PRE ASSIGNED LABOR VALUES TO ALL PARTS OF THE ROOF TOP UNIT, CONTRACTOR MUST GET YORK'S CONCURRANCE IN THE CONTRACTOR'S ESTIMATED LABOR CHARGE TO DO THE WORK PRIOR TO COMMENCING, OR CONTRACTOR MUST AGREE TO YORK'S LABOR ALLOWANCE. PARTS WILL BE FURNISHED AT NO COST BY YORK, THEY MAY ASK CONTRACTOR TO RETURN THE DEFECTIVE PART AND CONTRACTOR MUST DO SO.
4. FOR EXPEDITED SERVICE CONTRACTOR SHOULD HAVE THE MODEL AND SERIAL NUMBER OF THE UNIT IN QUESTION PRIOR TO MAKING A CALL FOR WARRANTY SERVICE.
5. CONTACTS:
FOR WARRANTY ISSUES: JESSICA RIBBLE 800–481–9738 OPTION 4
FOR TECHNICAL SUPPORT: LEROY BERRY 800–481–9739 OPTION 4

1/8" = 1'–0" MHN04

3 YORK WARRANTY NOTES

MARK	MANUFACTURER MODEL NO.	SUPPLY AIR	MIN. O.S.A.	E.S.P.	COOLING DATA ENT. AIR D.B.	COOLING DATA ENT. AIR W.B.	COOLING DATA TOTAL	COOLING DATA SENSIBLE	COOLING DATA EER	HEAT INPUT ENT. AIR D.B.	HEAT INPUT INPUT	HEAT INPUT OUTPUT	ELECTRICAL REQ. UNIT M.C.A. 208/3ø/60Hz	BREAKER	ECONOMIZER	COIL COATING	UNIT WEIGHT
RTU–1	YORK ZYG1202	4000 CFM	750 CFM	0.25 IN.	80	67	131,300 BTU	94,100 BTU	11.5	70	180,000 BTU	144,000 BTU	51.4	60	Required	No	1005
RTU–2	YORK ZYG1202	4000 CFM	755 CFM	0.25 IN.	80	67	131,300 BTU	94,100 BTU	11.5	70	180,000 BTU	144,000 BTU	51.4	60	Required	No	1005

3/32" = 1'–0" MHC01

6 ROOFTOP UNIT HEATING AND COOLING SCHEDULE

REVISIONS
1 2 3 4 5 6

AutoZone Store No. 6890
1593 N. MAIN ST.
LILLINGTON, NC 27546
HEATING AND COOLING

ENGINEER: DANNY E. DOSS P.E.
132 Kelley Drive
Rogers, Arkansas 72756
TEL: (479) 631-1712 FAX: (479) 631-1854
For Bidding & Contractor Information Contact:
Dodge Data & Analytics. Tel. 413-930-4215
Cindy.searcy@construction.com

05/06/20
NORTH CAROLINA PROFESSIONAL SEAL 12456 ENGINEER DANNY EUGENE DOSS

05/06/20

65W2-R

M-1.1

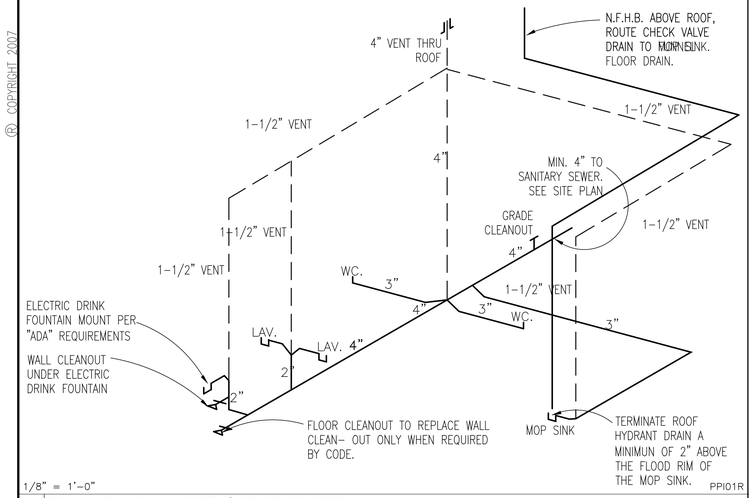

1/8" = 1'-0" PPI01R

1 PLUMBING WASTE/VENT RISER

1. DIG HOLE FOR HYDRANT APPROXIMATELY 2 FEET IN DIAMETER AND DEEPER THAN THE BURY DEPTH.
2. FLUSH GRAVEL, DEBRIS, ETC. OUT OF THE SUPPLY LINE BEFORE CONNECTING HYDRANT.
3. INSTALL HYDRANT WITH DRAIN HOLE BELOW FROST LINE. USE WRENCHES ON SUPPLY LINE FITTING AND BRASS BODY VALVE ONLY. THIS AVOIDS OVER TIGHTENING THE HYDRANT ASSEMBLY WHICH COULD AFFECT OPERATION.
4. IF SUPPLY LINE TO THE HYDRANT WILL NOT SUPPORT HYDRANT, USE RE-BAR, LENGTH OF PIPE OR OTHER SUITABLE SUPPORT DRIVEN IN BOTTOM OF PIT TO HELP SUPPORT HYDRANT. BEFORE FILLING EXCAVATION, TURN ON WATER AND CHECK HYDRANT CONNECTION FOR LEAKS.
5. PROVISIONS MUST BE MADE TO ALLOW THE WATER TO DRAIN FROM THE HYDRANT DRAIN HOLE EACH TIME THE HYDRANT IS CLOSED.
   (A) IF THE HYDRANT IS TO BE INSTALLED IN A CONCRETE DRIVEWAY, CONNECT 1/8 INCH COPPER DRAIN TUBING TO THE DRAIN HOLE AND DIG A REMOTE DRAIN FIELD FOR THE DRAIN PIPE TO EMPTY INTO.
   (B) SATURATED GROUND IN THE HYDRANT DRAIN FIELD CAN PREVENT THE HYDRANT FROM DRAINING AND MAY RESULT IN THE HYDRANT FREEZING. IF THE AREA WHERE THE HYDRANT IS LOCATED IS LOW LYING OR HAS A TENDENCY TO HAVE STANDING WATER, A LARGER DRAIN FIELD OR PIT MAY BE REQUIRED TO PROVIDE THE HYDRANT A PLACE TO DRAIN.
   (C) FILL BOTTOM OF PIT WITH 1/2 INCH GRAVEL TO A LEVEL 3 INCHES ABOVE BRASS DRAIN VALVE BODY TO INSURE ADEQUATE DRAINAGE.

1/8" = 1'-0" PPN02

2 YARD HYDRANT INSTALLATION

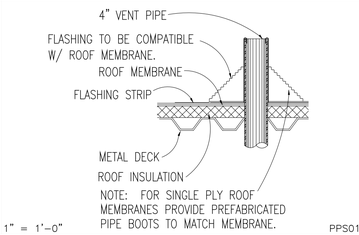

1" = 1'-0" PPS01

3 VENT STACK DETAIL

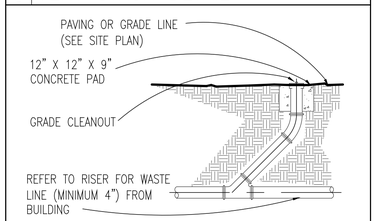

1/2" = 1'-0" PPS02

4 GRADE CLEANOUT

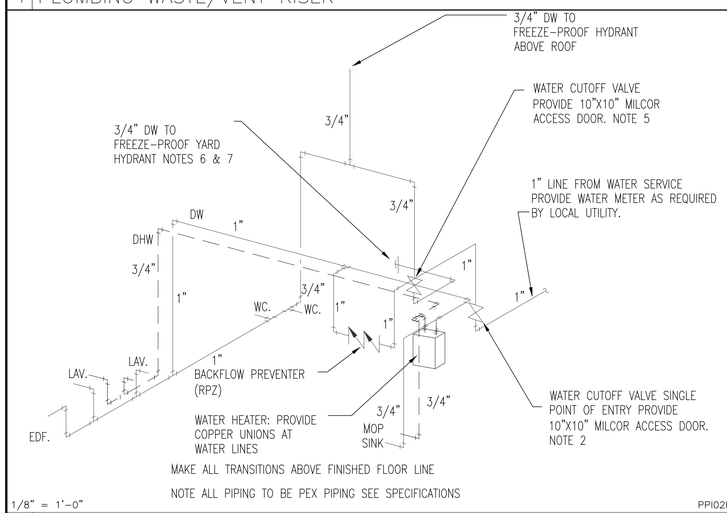

1/8" = 1'-0" PPI02R

5 PLUMBING WATER RISER

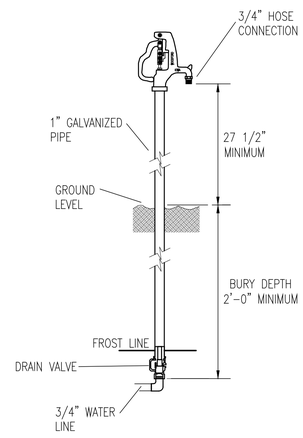

1 1/2" = 1'-0" PPS03

6 YARD HYDRANT

1. HOLD 4" SANITARY VENT THRU ROOF TIGHT AGAINST EXTERIOR WALL BETWEEN TOILET CEILING AND BOTTOM OF ROOF STRUCTURE. OFFSET VENT A MINIMUM OF 12" FROM FACE OF WALL BEFORE PENETRATING ROOF DECK.
2. MOUNT MAIN CUTOFF AT 24" A.F.F. IN RESTROOM, AS INDICATED ON ARCHITECTURAL ELEVATIONS.
3. INSTALL FREEZELESS IOWA YARD HYDRANT MODEL Y 34 AS MANUFACTURED BY WOODFORD MANUFACTURING COMPANY. HYDRANT SHALL BE LOCATED IN A GRASS OR LANDSCAPE AREA SEE CIVIL DRAWINGS FOR EXACT DIMENSIONAL LOCATION.
4. INSTALL YARD HYDRANT IN STRICT ACCORDANCE WITH MANUFACTURER'S PRINTED INSTRUCTIONS INCLUDING PROVIDING VERTICAL SUPPORT AND A BELOW GRADE DRAIN FIELD FOR YARD HYDRANT TO EMPTY INTO EACH TIME THE HYDRANT IS CLOSED.
5. PROVIDE CUT-OFF IN A RECESSED ACCESS BOX IN RESTROOM WHERE INDICATED ON THE DRAWINGS FOR THE 3/4" WATER LINE THAT FEEDS THE YARD HYDRANT.
6. SEE SITE PLAN TO VERIFY LANDSCAPE CONNECTION REQUIREMENTS AND LOCATIONS.
7. BACKFLOW PREVENTER IF REQUIRED BY LOCAL CODE TO BE INSTALLED INSIDE THE BUILDING - SEE GENERAL PLUMBING NOTES: NOTE "D".

1/8" = 1'-0" PPN01

7 KEYED PLUMBING NOTES

PLUMBING NOTES:
DESIGN PARAMETERS

1. PLUMBING CODE:	2018 INTERNATIONAL PLUMBING CODE
2. PLUMBING OCCUPANCY CLASSIFICATION:	Mercantile
BUILDING AREA FOR OCCUPANCY –	See Sheet A-0 for area
OCCUPANT LOAD –	See Sheet A-0 for occupancy
FIXTURE REQUIREMENTS:	
WATER CLOSETS –	1 per 500 people
LAVATORY –	1 per 750 people
DRINKING FOUNTAIN –	1 per 1000 people
SERVICE (MOP) SINK –	1 per store

3. SEPARATE FACILITIES ARE REQUIRED FOR MEN AND WOMEN. THERE IS 1 WATER CLOSET AND 1 LAVATORY FOR EACH RESTROOM. IF REQUIRED BY CODE, THERE SHOULD BE 1 URINAL IN THE MEN'S RESTROOM.

GENERAL PLUMBING NOTES:

A. PIPE MATERIAL SHALL BE AS FOLLOWS:

SOIL, WASTE AND VENT (INSIDE BLDG.)	ASTM D2665 PVC-DWV WITH NSF SEAL
SOIL AND WASTE (OUTSIDE BLDG.)	ASTM D3034 PVC
DOMESTIC WATER (UNDER SLAB)	PEX PIPE SEE SPECIFICATIONS
DOMESTIC WATER (INSIDE ABOVE SLAB)	PEX PIPE SEE SPECIFICATIONS
DOMESTIC WATER MAIN (TO WITHIN 5' OF BLDG.)	PEX PIPE SEE SPECIFICATIONS
NATURAL GAS	ASTM A120, SCHEDULE 40 BLACK STEEL WITH FACTORY APPLIED PROTECTIVE COATING FOR UNDERGROUND APPLICATION.
CONDENSATE	PVC, SOLVENT WELDED

B. THE PIPE INSULATION SHALL BE AS FOLLOWS:

DOMESTIC COLD WATER	1/2" POLYOLEFIN CLOSED CELL
DOMESTIC HOT WATER	ABOVE GRADE – SAME AS COLD WATER
	BELOW GRADE – 3/8" CLOSED CELL SUITABLE FOR UNDERGROUND USE
CONDENSATE (INSIDE BUILDING)	1/2" POLYOLEFIN CLOSED CELL

C. THE ELECTRIC WATER HEATER WILL BE A MINITANK, ARISTON MODEL GL-4-Ti, FURNISHED BY AUTOZONE FOR INSTALLATION BY THE CONTRACTOR.

D. A BACKFLOW PREVENTER SHALL BE FURNISHED AND INSTALLED BY THE CONTRACTOR, WHEN REQUIRED BY LOCAL CODE. THE BACKFLOW PREVENTER SHALL BE A REDUCED PRESSURE ZONE TYPE, WATTS LF009M2QT SERIES. INSTALL THE BACKFLOW PREVENTER IN ACCORDANCE WITH LOCAL CODE. IF BACKFLOW PREVENTER IS INSTALLED INSIDE THE BUILDING, ROUTE THE DRAIN IN THE WALL TO THE MOP SINK AND TERMINATE ABOVE THE FLOOD RIM OF THE SINK.

E. THE WATER CLOSET SHALL BE A 1.6 GALLON PER FLUSH, MAXIMUM.

F. THE LAVATORY FAUCET SHALL HAVE A MAXIMUM FLOW RATE OF 1.0 GPM. THE HANDLES SHALL BE ALL BRASS AND HANDICAP ACCESSIBLE.

G. THE MOP SINK SHALL BE FLOOR MOUNTED. THE FAUCET SHALL HAVE AN INTEGRAL VACUUM BREAKER AND BUCKET HOOK.

H. ALL ABOVE GROUND WATER SUPPLY PIPING SHALL BE INSULATED.

I. FLOOR DRAINS SHALL BE PROVIDED ONLY WHEN REQUIRED BY CODE.

J. PROVIDE WATTS SERIES SHOCK ABSORBERS AT ALL QUICK CLOSING VALVES WHERE APPLICABLE.

K. SHUT OFF VALVES SHALL BE INSTALLED FOR EACH PLUMBING FIXTURE.

1/8" = 1'-0" PGN01

8 PLUMBING NOTES

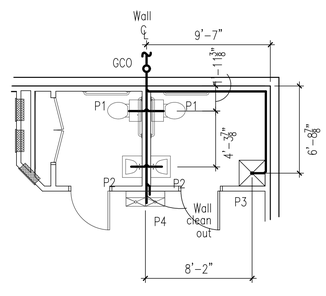

3/16" = 1'-0" PPP0165w2R

9 RESTROOM SEWER PLAN

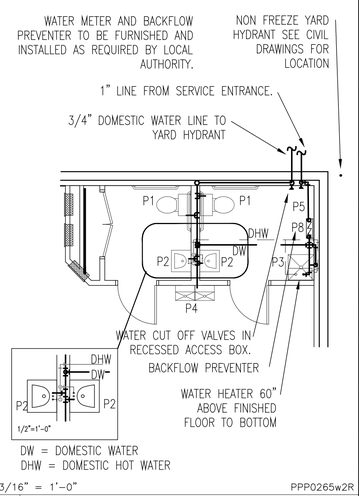

3/16" = 1'-0" PPP0265w2R

10 RESTROOM WATER PLAN

	AMERICAN STANDARD	KOHLER	ELJER
P-1 TOILET (ELONGATED HANDICAP)1.6 GPF	"CADET 3" #2386.800 R.H. "CADET 3" #2386.012 L.H.	"HIGHLINE" #K-3427	"PATRIOT" #091-2175
	NOTE: TOILET TANK TRIP LEVER TO BE LOCATED ON LAVATORY SIDE OF TANK.		
P-2 LAVATORY	"LUCERNE" #0355.012	"GREENWICH" #2032	"DELWYN" #051-1634
FAUCET	MOEN #8800, 4 INCH CENTERS, 4 INCH WRIST BLADE WITH 1/4 TURN HANDLES, WASHERLESS CARTRIDGES, AND MOEN #52602 1 GALLON PER MINUTE FLOW REDUCER. CONTRACTOR SHALL FURNISH AND INSTALL A WATTS LFMMV- MIXING VALVE TO SERVE THE FAUCETS (SET TO 110 F).		
DRAIN	MOEN "52660, OFFSET CHROME PLATED TAILPIECE.		
P-3 SERVICE SINK	FIAT #MSB-2424 OR MUSTEE #63		
FAUCET	MOEN #8124		
P-4 WATER FOUNTAIN	HANDICAP ACCESSIBLE DUAL HEIGHT: ELKAY EZTL-8C OR HALSEY TAYLOR HTV8BL-Q		
P-5 URINAL (IF REQUIRED	"TRIMBROOK" #6561.017	"BARDEN" #K-4960-T	"SAVON" #161-1090
FLUSH VALVE	SLOAN #186-1 OR ZURN #Z6003XL-WS1 OR A/S 6045.101		

1/8" = 1'-0" PPC02

11 PLUMBING FIXTURE SCHEDULE

FIXTURE	DIM.	REMARKS
TOILET SEATS (ACCESSIBLE)	17"	19" TOP OF SEAT MAX.
URINALS (WHEN REQ'D) (ACCESSIBLE)	17"	TO RIM
LAVATORIES (ACCESSIBLE)	34"	TO RIM, 29" MIN. TO BOTTOM OF APRON
WATER COOLER (ACCESSIBLE)	36"	TO SPOUT
WATER HEATER	60"	A.F.F. TO BOTTOM OF HEATER

1/8" = 1'-0" PPC01

12 MOUNTING HEIGHT SCHEDULE

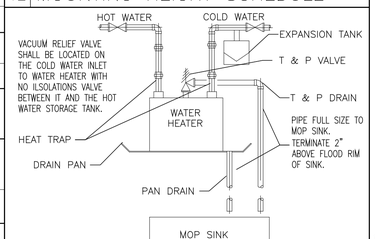

13 WATER HEATER INSTALLATION

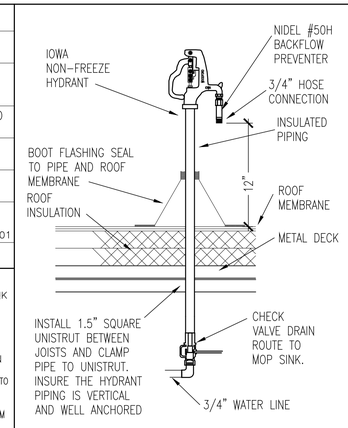

1 1/2" = 1'-0" PPS04

14 ROOF HYDRANT

REVISIONS

1	2	3	4	5	6

AutoZone Store No. 6890
1593 N. MAIN ST.
LILLINGTON, NC 27546
PLUMBING PLAN

ENGINEER: DANNY E. DOSS P.E.
132 Kelley Drive
Rogers, Arkansas 72756
TEL: (479) 631-1712 FAX: (479) 631-1854
For Bidding & Contractor Information Contact:
Dodge Data & Analytics. Tel. 413-930-4215
Cindy.searcy@construction.com

05/14/2020
NORTH CAROLINA PROFESSIONAL SEAL 12456 ENGINEER DANNY EUGENE DOSS

05/06/20

65W2-R

M-2

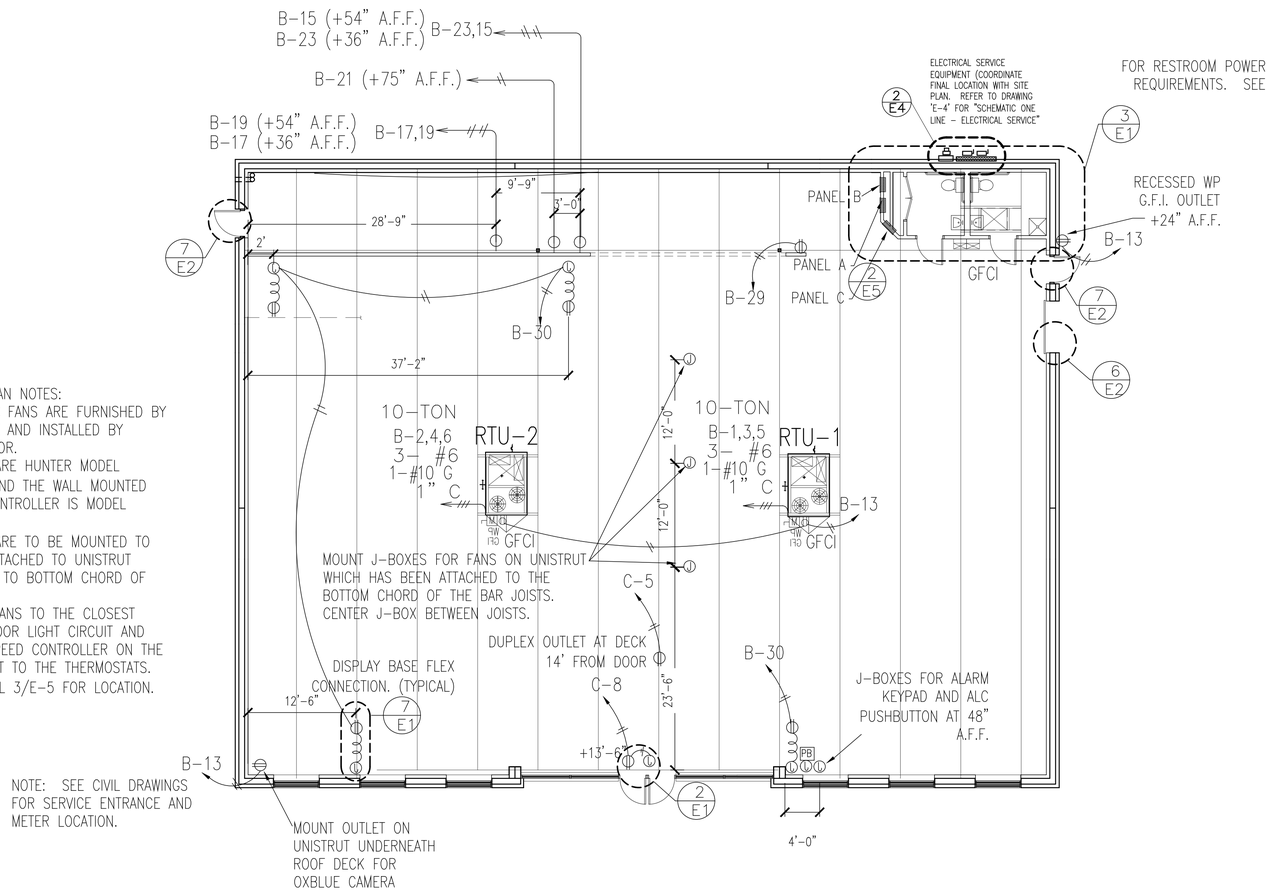

CEILING FAN NOTES:
1. CEILING FANS ARE FURNISHED BY AUTOZONE AND INSTALLED BY CONTRACTOR.
2. FANS ARE HUNTER MODEL #28692 AND THE WALL MOUNTED SPEED CONTROLLER IS MODEL #27180.
3. FANS ARE TO BE MOUNTED TO J-BOX ATTACHED TO UNISTRUT ATTACHED TO BOTTOM CHORD OF JOISTS.
4. WIRE FANS TO THE CLOSEST SALES FLOOR LIGHT CIRCUIT AND MOUNT SPEED CONTROLLER ON THE WALL NEXT TO THE THERMOSTATS. SEE DETAIL 3/E-5 FOR LOCATION.

1/8" = 1'-0"

1 POWER PLAN

ELECTRICAL NOTES

DESIGN PARAMETERS: 2017 NATIONAL ELECTRICAL CODE

COMPLY WITH LATEST EDITION OF NATIONAL ELECTRIC CODE ALONG WITH ALL LOCAL, STATE, AND UTILITY REGULATIONS OR LAWS. PROVIDE UL APPROVED MATERIALS AND DEVICES.

LOAD SUMMARY:

AUTOZONE ELECTRICAL LOAD SUMMARY			
LOAD NAME	CONNECTED VA	LOAD NAME	CONNECTED VA
INDOOR LIGHTING	4531	EQUIPMENT	26783
OUTDOOR LIGHTING	2643	COOLING	37440
RECEPTACLES	1620	TOTALS	74517
WATER HEAT	1500		

ITEMS FURNISHED BY AUTOZONE:

A. FUSED DISCONNECTS
B. PANELBOARDS
C. CIRCUIT BREAKERS
D. ALL LIGHT FIXTURES
E. LAMPS
F. LIGHTING CONTROL PANEL & ACC.
G. OCCUPANCY SENSING LIGHT SWITCHES
H. PHOTOCELLS
I. CONTROL RELAYS
J. BALLASTS
K. SITE LIGHT POLES AND BRACKETS

WORK INCLUDED:

A. CONDUIT, WIRES, CABLE, AND WIRING DEVICES.
B. PRIMARY WIRING, CONDUIT AND FINAL CONNECTIONS FOR ALL SIGN CIRCUITS.
C. CONDUIT AND PULL STRINGS FOR DATA/TELEPHONE RUNS. (WIRING N.I.C.)
D. CONDUIT AND PULL STRINGS FOR THERMOSTATS (WIRING BY MECHANICAL CONTRACTOR).
E. CONDUIT AND PULL STRINGS FOR SECURITY SYSTEM (WIRING N.I.C.).
F. FIELD TESTING.
G. ELECTRIC SERVICE ENTRANCE AND UTILITY COORDINATION.
H. TELEPHONE SERVICE ENTRANCE AND UTILITY COORDINATION.

SERVICE ENTRANCE, ELECTRIC AND TELEPHONE:

A. ALL WIRE CONNECTIONS AND TERMINATIONS IN WIREWAY, SERVICE DISCONNECTS AND PANELBOARDS SHALL BE RATED AT 75 DEG C.
B. SUBMIT TO LOCAL UTILITY ALL REQUIRED DRAWINGS, LOADS AND ANY OTHER INFORMATION NEEDED TO OBTAIN SERVICE.
C. PROVIDE ALL MATERIALS AND INSTALLATION REQUIRED TO COMPLETELY CONNECT TO THE SERVING UTILITY. WORK SHOULD INCLUDE, BUT NOT NECESSARILY BE LIMITED TO, PRIMARY CONDUITS, CABLE (IF REQUIRED), PAD MOUNTED TRANSFORMER PADS, GROUNDING METERING PROVISIONS, SECONDARY CONDUCTORS AND CONDUIT, ALL AS REQUIRED BY THE LOCAL UTILITY.
D. FURNISH AND INSTALL CONDUIT ALONG WITH PULL BOXES, FOR TELEPHONE SERVICE AS REQUIRED BY SERVICE PROVIDER. SEE CIVIL DRAWINGS FOR LOCATIONS AND CONDUIT SIZE. CONDUIT IS TO RUN FROM THE TELEPHONE PANEL LOCATION IN THE BUILDING TO THE TELEPHONE COMPANY'S POINT OF CONNECTION, WHICH WILL EITHER BE A GROUND MOUNTED PEDESTAL OR A POINT USUALLY BETWEEN 10 FEET AND 15 FEET ABOVE GRADE ON A UTILITY POLE. CONDUIT SHALL BE CONTINUOUS FROM END TO END.

PANELBOARDS:

A. INSTALL PANELBOARDS SECURELY INTO POSITION AS SHOWN ON DETAIL 2/E5 AND 3/E5
B. CONTRACTOR TO VERIFY WITH THE UTILITY COMPANY THAT THE PANELS ARE ACCEPTABLE AND IF NOT, CONTACT THE AUTOZONE PROJECT MANAGER FOR FURTHER INSTRUCTIONS.
C. CONNECT ALL CIRCUITS EXACTLY AS SHOWN ON THE PANEL SCHEDULE.

3/32" = 1'-0" EGN01

4 GENERAL NOTES

SYM	DESCRIPTION	FURN.	REMARKS
	EXHAUST FAN RECESSED	AUTOZONE	INSTALLED BY HVAC CONTRACTOR, WIRED BY ELECTRICAL CONTRACTOR.
J	JUNCTION BOX	G.C.	SEE SHT. E2 FOR ADDITIONAL JUNCTION BOX LOCATIONS AND REQUIREMENTS AT DOORS FOR ALARMS.
T	THERMOSTAT	AUTOZONE	WALL MOUNT ABOVE ELECTRICAL PANELS. 9'-0" A.F.F. MAX.
M	HVAC DISCONNECT WITH UNIT		REFER TO HVAC SPECIFICATIONS
P	POWER POLES	AUTOZONE	REFER TO PLAN FOR LOCATION
	SIMPLEX RECPT.	G.C.	REFER TO PLAN FOR LOCATIONS
	DUPLEX RECPT./ FLOOR RECPT.	G.C.	REFER TO PLAN FOR LOCATIONS
	QUADPLEX RECPT.	G.C.	REFER TO PLAN FOR LOCATIONS
WP GFI	WEATHERPROOF DUPLEX RECPT.(GFI)	G.C.	REFER TO PLAN FOR LOCATIONS
	JUNCTION BOX WITH 6'-0" FLEX CONDUIT AT WALL & H.P. COUNTERS	G.C. (FIXTURE KICK PLATE BY OWNER)	J-BOX AT FLOOR LEVEL, FLEX CONDUIT SET UNDER DISPLAY FIXTURES. RECEPTACLE MOUNTED TO BASE PLATE. SEE DETAIL 7/E1

1/8" = 1'-0" EPL01

5 POWER SCHEDULE

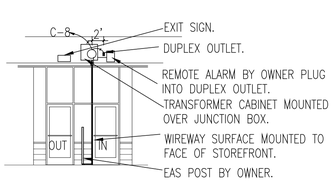

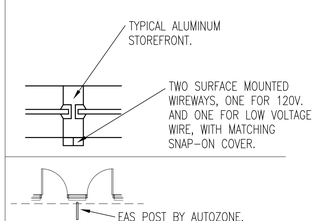

NOTES:

1. AUTOZONE'S EQUIPMENT INSTALLER WILL FURNISH & INSTALL ALL REQUIRED SECURITY ALARM EQUIPMENT INCLUDING FLOOR POSTS, TRANSFORMER CABINET AND REMOTE ALARM SOUNDER AND COUNTER ABOVE THE DOOR.

2. GENERAL CONTRACTOR TO INSTALL DUAL WIREWAY ON THE SURFACE OF THE STOREFRONT IN ROUTING AS INDICATED TO CONNECT FLOOR-MOUNTED EAS POSTS TO THE JUNCTION BOX ABOVE STOREFRONT.

3. GENERAL CONTRACTOR TO LEAVE SNAP-ON COVER OFF THE RACEWAY SO THAT AUTOZONE'S EQUIPMENT VENDOR CAN INSTALL LOW VOLTAGE WIRING FOR THE REMOTE ALARM.

1/8" = 1'-0" EAN01WR

2 ELECTRONIC SECURITY DETAIL

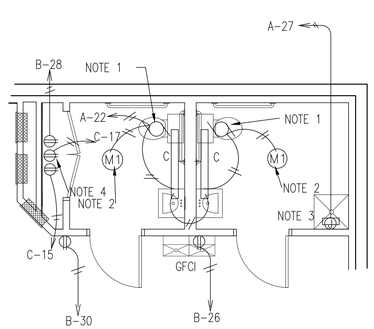

NOTES:

1. CONNECT EXHAUST FANS TO RESTROOM LIGHT AND MOTION SENSOR.

2. MOTION SENSOR CMR-9 FURNISHED BY AUTOZONE INSTALLED BY CONTRACTOR.

3. WATER HEATER WILL BE A MINITANK ARISTON MODEL GL 4 Ti, PROVIDED BY AUTOZONE. ELECTRICAL CONTRACTOR TO PROVIDE FINAL HOOKUP OF WATER HEATER. WATER HEATER TO BE MOUNTED ON THE WALL ABOVE THE MOP SINK.

4. REFER TO DETAIL 1/E4 FOR LOCATION OF OUTLETS IN THE TELEPHONE AND ALARM CLOSET.

5. CENTER LIGHT FIXTURE ON WALL AT 6'-8" A.F.F.

1/4" = 1'-0" EPP0165w2R

3 RESTROOM POWER AND LIGHTING

A. ELECTRICAL CONTRACTOR TO PROVIDE EMPTY CONDUIT & BOXES BETWEEN RTU'S AND THERMOSTAT LOCATIONS INDICATED. MECHANICAL CONTRACTOR TO PROVIDE CONTROL WIRING AND COMPLETE INSTALLATION. REFER TO SHEETS E5 AND M1. J-BOXES FOR THERMOSTATS SHALL BE INSTALLED HORIZONTALLY W/ A MINIMUM OF 6" BETWEEN BOXES.
B. REFER TO SHEET E2 FOR POWER POLE, JUNCTION BOX AND FLOOR OUTLET LOCATIONS. ALL OTHER CONDUITS FOR RECEPTACLE MAY BE RUN EITHER OVERHEAD OR UNDER SLAB.
C. REFER TO SHEET E3 FOR JUNCTION BOX LOCATIONS AND POWER CIRCUITS FOR WALL SIGNAGE. ELECTRICAL CONTRACTOR SHALL MAKE ALL FINAL CONNECTIONS FOR WALL SIGNAGE.
D. CONDUIT RUN OVERHEAD SHALL BE POSITIONED TO BE TIGHT AGAINST THE BOTTOM OF THE TOP CHORD OF THE BAR JOIST, AND BE IN COMPLIANCE WITH THE REQUIREMENTS OF THE NATIONAL ELECTRIC CODE.
E. REFER TO CIVIL DRAWINGS FOR PARKING LOT SITE LIGHT LOCATIONS AND PYLON SIGN LOCATION. PARKING LOT SITE LIGHTS TYPICALLY HAVE TWO 400W FIXTURES PER POLE AND SHOULD BE WIRED TWO POLES PER CIRCUIT. FINAL CONNECTIONS FOR PYLON SIGN AND BUILDING WALLS SIGNS TO BE MADE BY ELECTRICAL CONTRACTOR.
F. REFER TO DETAIL 3 AND 4/M1 FOR RTU CONVENIENCE OUTLET LOCATION.
G. MOUNT JUNCTION BOX TIGHT TO FLOOR FOR DISPLAY BASE FLEX OUTLET. OUTLET ON FLEX TO BE INSTALLED HORIZONTALLY IN FIXTURE BASE AFTER FIXTURES ARE SET IN PLACE.
H. NO RECEPTACLE BRANCH CIRCUIT SHALL BE INSTALLED IN A MULTIWIRE BRANCH CIRCUIT CONFIGURATION. NEUTRAL CONDUCTORS SHALL NOT BE SHARED BETWEEN DIFFERENT CIRCUITS.

1/8" = 1'-0" EPN01

6 ELECTRICAL NOTES

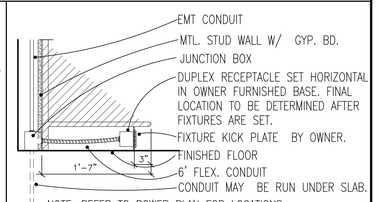

1" = 1'-0" EPS01

7 RECEPTACLE DETAIL / SUPPLY FIXTURES

REVISIONS			
1	REV1	4	REV4
2	REV2	5	REV5
3	REV3	6	REV6

AutoZone Store No. 6890
1593 N. MAIN ST.
LILLINGTON, NC 27546
POWER PLAN / GENERAL NOTES

ENGINEER: DANNY E. DOSS P.E.
132 Kelley Drive
Rogers, Arkansas 72756
TEL: (479) 631-1712 FAX: (479) 631-1854
For Bidding & Contractor Information Contact:
Dodge Data & Analytics. Tel. 413-930-4215
Cindy.searcy@construction.com

05/14/2020
NORTH CAROLINA PROFESSIONAL ENGINEER SEAL 12456 DANNY EUGENE DOSS

05/06/20

65W2-R

E-1

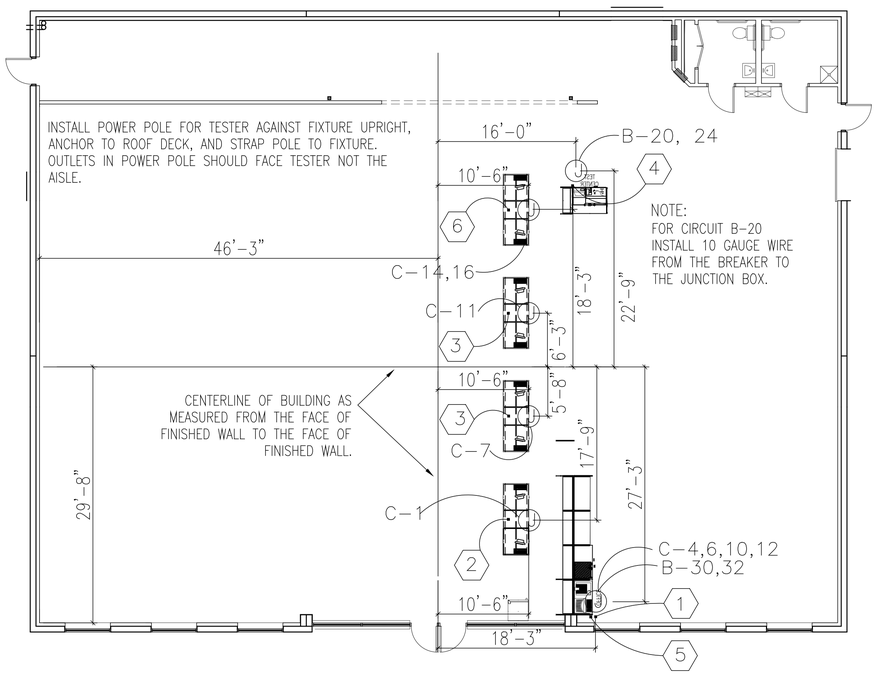

1/8" = 1'-0"

1 POWER POLE & JUNCTION BOX LOCATIONS

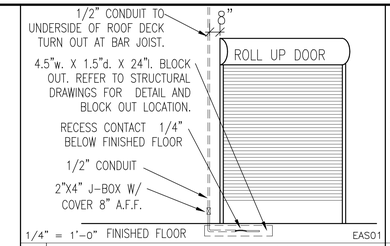

1/4" = 1'-0" EAS01

6 OVERHEAD DOOR ALARM REQS.

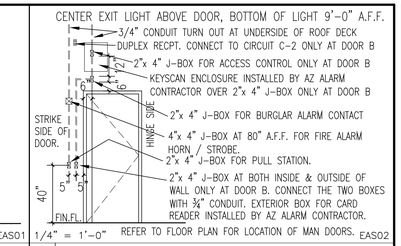

1/4" = 1'-0" EAS02

7 TYPICAL MAN DOOR

A. LABEL ALL CIRCUITS ON J-BOXES AND ALL OUTLETS WITH MULTIPLE CIRCUITS.
B. ALL WIRING ON FLOOR UNDER COUNTERS SHALL BE IN 3/8" FLEXIBLE CONDUIT.
C. RUN ALL CONDUIT AND CABLES UNDER AND NOT THROUGH SHELF SUPPORTS.
D. DO NOT PERMANENTLY ATTACH OUTLET BOXES OR FLEX CONDUIT TO FLOOR.
E. MOUNT OUTLETS IN KICKPLATES AFTER OWNER'S FIXTURES HAVE BEEN INSTALLED.
F. INSTALL JUNCTION BOX AT LOCATIONS SHOWN FOR POWER. INSTALL AUTOZONE FURNISHED FLEXIBLE QUICK CONNECTORS TO EACH BOX INDICATED POWER POLE SCHEDULE.
G. AUTOZONE'S CONTRACTOR CROSSCOM WILL INSTALL CAT. 5 CABLE FOR DATA AND PHONE LINES. IN ADDITION TO TAGGING THE ENDS OF ALL CABLES, CROSSCOM WILL CRIMP THE ENDS OF ALL CABLES WITH A 8 PIN RJ-45 CONNECTOR.
H. ALL CIRCUITS OVER 100 FEET IN LENGTH SHALL BE RUN WITH #10 AWG.
I. PROVIDE 2 PULL WIRES IN ALL EMPTY CONDUITS.
J. LOCATE ALL POWER POLES AFTER FIXTURES ARE IN PLACE.

1/8" = 1'-0" EUPN01

8 GENERAL WIRING AND POWER NOTES

1. OFFICE AREA POWER POLE – ALL CIRCUITS ARE HARD WIRED TO POLE FROM JUNCTION BOX WITH FLEXIBLE CONDUIT.
2. CHECKOUT COUNTER POWER POLE WITH ONE DUPLEX OUTLET PRE-WIRED ON POLE FOR CONNECTION TO INDIVIDUAL CIRCUITS IN AUTOZONE FURNISHED QUICK CONNECTOR.
3. PARTS POD POWER POLE WITH ONE DUPLEX OUTLET PRE-WIRED ON POLE FOR CONNECTION TO AUTOZONE FURNISHED QUICK CONNECTOR.
4. TEST STATION POWER POLE WITH ONE SIMPLEX OUTLET AND ONE DUPLEX OUTLET PRE-WIRED ON POLE FOR CONNECTION TO INDIVIDUAL CIRCUITS IN AUTOZONE FURNISHED QUICK CONNECTOR. ATTACH TOP OF POWER POLE TO ROOF DECK AND STRAP POLE TO THE FACE OF THE FIXTURE UPRIGHT. BOTTOM OF POLE SHOULD BE A MINIMUM OF 30" ABOVE FLOOR AND OUTLETS SHOULD FACE THE TEST STATION.
5. CAMERA SYSTEMS POWER POLE TO BE LOCATED ADJACENT TO POWER POLE #1. POLE TO HAVE TWO 10 FOOT LONG 1/2" WHIPS WITH PULL WIRE. DO NOT PLACE ANY OTHER WIRE IN POLE.
6. COMMERCIAL COUNTER POWERPOLE WITH TWO DUPLEX OUTLETS PRE-WIRED ON POLE FOR CONNECTION TO INDIVIDUAL CIRCUITS IN AUTOZONE FURNISHED QUICK CONNECTORS.

1/8" = 1'-0" NOTE: POWER POLES #1 & 5 WILL BE FURNISHED BY AUTOZONE AND MUST BE TRIMMED TO FIT IN THE FIELD. EPPL01

9 POWER POLE LEGEND

1. CONNECT THE APPROPRIATE OWNER FURNISHED PREWIRED FEMALE FLEXIBLE QUICK CONNECTOR TO THE CIRCUIT(S) IN THE JUNCTION BOX SERVING EACH OF THE PODS. FOR DETAILED WIRING INSTRUCTION, SEE ADDITIONAL INFORMATION IN WIRING DIAGRAMS ON THIS SHEET. COIL UP THE FLEXIBLE CONDUIT AND WIRE TIE TO THE CLOSEST BAR JOIST.

2. POSITION NON-POD POWER POLES AFTER FIXTURES ARE IN PLACE, ANCHOR ALL POLES PER MANUFACTURER'S INSTRUCTIONS. MAKE FINAL CONNECTIONS THROUGH FLEX CONDUIT TO JUNCTION BOXES AT ROOF DECK. POWER POLES FOR THE PODS WILL COME WITH A MALE QUICK CONNECTOR AND WILL BE PLUGGED IN BY OWNER.

3. AT THE BOTTOM OF THE OFFICE POWER POLE MAKE 1" FLEX CONNECTIONS TO JUNCTION BOXES AND FROM THE JUNCTION BOX MAKE CONNECTIONS USING 3/8" FLEX TO EACH OF THE DEVICES.

1/8" = 1'-0" EPPN01

10 POWER POLE NOTES

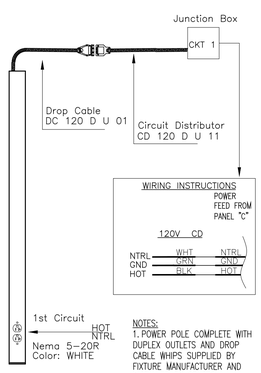

1/8" = 1'-0" EPP02

2 CHECK OUT POWER POLE #2

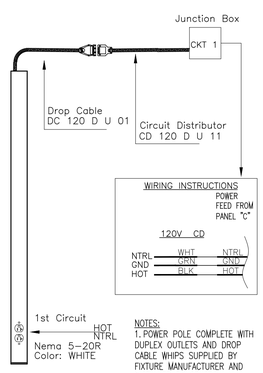

1/8" = 1'-0" EPP01

3 PARTS POD POWER POLE #3

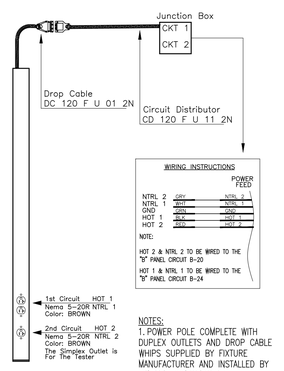

1/8" = 1'-0" EPP03

4 TESTER POWER POLE #4

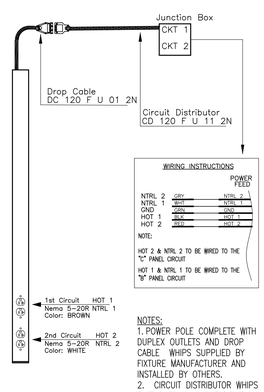

1/8" = 1'-0" EPP02

5 COMMERICAL POWER POLE #6

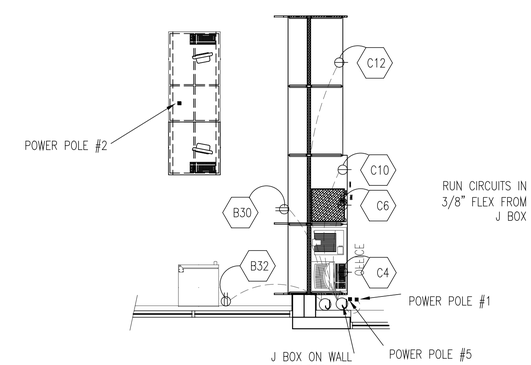

1/8" = 1'-0" EPP0465w2R

11 OFFICE AREA POWER PLAN

REVISIONS

1	2	3	4	5	6

AutoZone Store No. 6890
1593 N. MAIN ST.
LILLINGTON, NC 27546
CONDUIT / POWER AND DATA PLANS

ENGINEER: DANNY E. DOSS P.E.
132 Kelley Drive
Rogers, Arkansas 72756
TEL: (479) 631-1712 FAX: (479) 631-1854
For Bidding & Contractor Information Contact:
Dodge Data & Analytics. Tel. 413-930-4215
Cindy.searcy@construction.com

05/14/2020
NORTH CAROLINA PROFESSIONAL SEAL 12456 ENGINEER DANNY EUGENE DOSS

05/06/20

65W2-R

E-2

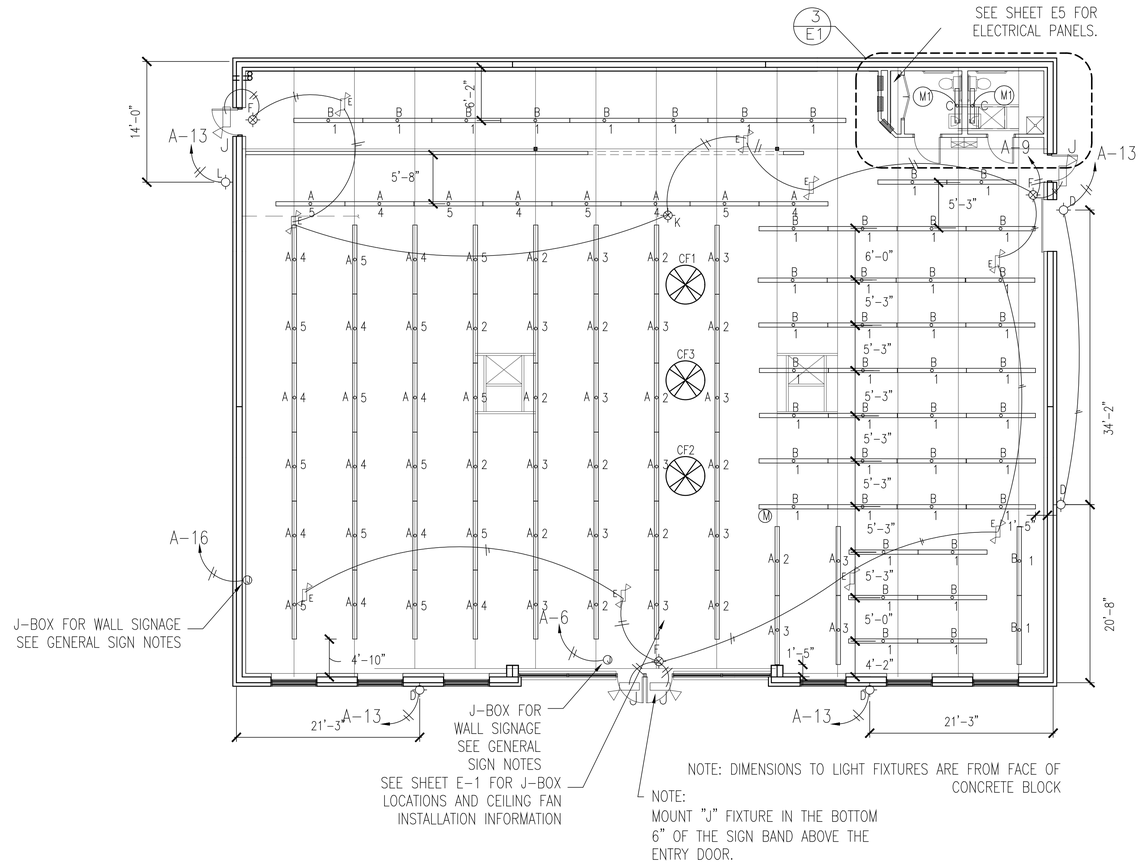

1/8" = 1'-0"

1 LIGHTING PLAN

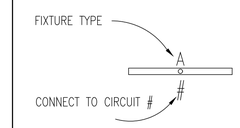

LIGHTING FIXTURE

A-28

INDICATES BRANCH CIRCUITING REFER TO PANEL SCHEDULE LONG = NEUTRAL; SHORT = PHASE

CIRCUIT

1/8" = 1'-0" ELL01

2 LIGHTING CIRCUIT SYMBOLS

1. ALL WALL SIGNS SHALL BE INSTALLED BY AUTOZONE'S SIGN VENDOR WHO WILL PUSH SIGN WIRING THROUGH WALL ASSEMBLY. CONNECTIONS OF SIGN WIRING TO HOME RUN CIRCUITRY WILL BE BY GENERAL CONTRACTOR.

2. FOR ALL REMOTE CHANNEL LETTER SIGNS AUTOZONE'S SIGN VENDOR WILL INSTALL AN INTERIOR SURFACE MOUNTED RACEWAY FOR TRANSFORMERS AND WIRE, SO THAT THE GENERAL CONTRACTOR CAN TIE ALL INDIVIDUAL LETTER WIRING TOGETHER AND THEN CONNECT TO THE HOME RUN CIRCUIT.

3. SIGN VENDOR SHALL BE RESPONSIBLE FOR SEALING ALL OF HIS WIRING PENETRATIONS THROUGH THE EXTERIOR WALLS WITH THE EXCEPTION OF PENETRATIONS THROUGH PARAPET WALLS OR ROOFING. THOSE PENETRATIONS SHALL BE SEALED BY GENERAL CONTRACTOR SO AS NOT TO VOID ANY WARRANTY CONNECTED WITH THE ROOFING INSTALLATION. GENERAL CONTRACTOR SHALL PAINT ALL EXPOSED BOXES, CONDUIT AND RACEWAYS TO MATCH SURROUNDING WALLS SURFACES.

ENN01

3 SIGNAGE INSTALLATION GENERAL NOTES

SYMBOL	DESCRIPTION	SUPPLIED	LAMPS	MOUNTING
A	8' LED STRIP 42 WATTS INPUT #C2328X1	AUTOZONE	4 – 10.5 WATT T8 – 4' LED TUBE	SEE PLAN FOR LOCATIONS
B	8' LED STRIP 21 WATTS INPUT #C1328W30X1	AUTOZONE	2 – 10.5 WATT T8 – 4' LED TUBE	SEE PLAN FOR LOCATIONS
C	4' LED STRIP 10.5 WATTS INPUT WALL LIGHT – #555A132X1	AUTOZONE	1 – 10.5 WATT T8 – 4' LED TUBE	SURFACE MOUNTED @ 6'-8" ABOVE FINISHED FLOOR CENTER ON WALL
D	D-Series Size 1 Luminaire DSXW1 LED 10C 1000 40K T3M MVOLT	AUTOZONE	40 WATT	MOUNT TOP OF FIXTURE AT THE SAME ELEVATION AS TOP OF THE STOREFRONT
E	EMERGENCY LIGHT WITH BATTERY BACKUP	AUTOZONE	INCLUDED WITH FIXTURE	MOUNTED TO BOTTOM OF BAR JOIST OR UNISTRUT
F	EXIT SIGN WITH BATTERY BACKUP FOR REMOTE EXIT EMERGENCY HEAD	AUTOZONE	INCLUDED WITH FIXTURE	SEE PLAN FOR LOCATIONS AND MOUNTING INFORMATION
G	GOTHAM 8" LED DOWN LIGHT EVO R 40/30 8AR 120 TRW	AUTOZONE	49 WATT	MOUNTED IN SOFFIT SEE PLAN FOR LOCATIONS
J	EXTERIOR EMERGENCY LIGHT WITH BATTERY BACKUP	AUTOZONE	INCLUDED WITH FIXTURE	REMOTE HEAD MOUNTED OUTSIDE ABOVE DOOR WIRE TO EXIT LIGHT FIXTURE
K	EXIT SIGN WITH BATTERY BACKUP	AUTOZONE	INCLUDED WITH FIXTURE	MOUNTED TO BOTTOM OF BAR JOIST OR UNISTRUT
L	D-Series Size 1 Luminaire DSXW1 LED 10C 530 40K T3M MVOLT	AUTOZONE	20 WATT	MOUNT TOP OF FIXTURE AT THE SAME ELEVATION AS TOP OF THE STOREFRONT
M	4' LED STRIP 21 WATTS INPUT #C232X1	AUTOZONE	2 – 10.5 WATT T8 – 4' LED TUBE	SEE PLAN FOR LOCATIONS
N	4' LED STRIP 10.5 WATTS INPUT #C132W30X1	AUTOZONE	1 – 10.5 WATT T8 – 4' LED TUBE	SEE PLAN FOR LOCATIONS
M	MOTION SENSOR FOR ALC PANEL	AUTOZONE	– – – – –	J-BOX HORIZONTAL BOTTOM OF JOIST OR UNISTRUT
M1	OCCUPANCY SENSOR-CMR-9	AUTOZONE	– – – – –	RESTROOM CEILING – CONNECT TO FAN & LIGHT
SITE LIGHT	D-Series Size 1 Luminaire DSX1 LED 60C 1000 40K T3M MVOLT	AUTOZONE	209 WATT	SEE CIVIL SHEETS FOR POLE AND FIXTURE LOCATIONS
M2	MOTION SENSOR-10 MINUTE ON LSXR-50-HL	AUTOZONE	– – – – –	J-BOX HORIZONTAL MOUNT TO SIDE OF LIGHT FIXTURE INSTALL AISLEWAY LENS #50

LIGHT FIXTURE SCHEDULE NOTES:

1. NOT EVERY SYMBOL WILL BE UTILIZED ON EACH PROJECT SEE FLOOR PLAN ON THIS SHEET FOR THE ITEMS THAT APPLY TO THIS SPECIFIC PROJECT.
2. AUTOZONE WILL FURNISHED LED STRIP FIXTURES AND MOTION SENSORS SHOWN IN SCHEDULE ABOVE AND CALLED FOR ON THE PLAN. SEE MOUNTING DETAILS THIS SHEET.
3. MOTION SENSOR M2 WILL BE USED IN HUB AND MEGA HUB STORES ONLY.

1/8" = 1'-0 ELCO1LED

4 LIGHT FIXTURE SCHEDULE

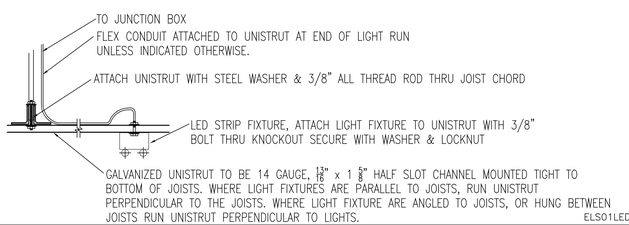

1/8" = 1'-0" ELS01LED

5 LED STRIP FIXTURE MOUNTING DETAIL BETWEEN JOISTS

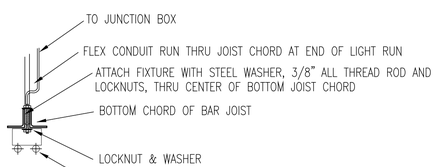

NOTE: SPACING OF FIXTURE SUPPORTS ARE TO BE IN ACCORDANCE WITH THE CURRENT EDITION OF NATIONAL ELECTRIC CODE.

1/8" = 1'-0" ELS02LED

6 LED STRIP FIXTURE MOUNTING DETAIL FIXTURE AT JOIST

A. ALL DIMENSIONS ARE FROM FACE OF CONCRETE BLOCK WALLS AND TO THE CENTERS OR ENDS OF LIGHT FIXTURES.
B. INSTALL OCCUPANCY SENSOR IN BATHROOMS TO CONTROL LIGHT / FAN.
C. POSITION ALL CONDUIT TO BE TIGHT AGAINST THE BOTTOM OF THE TOP CHORD OF THE BAR JOIST, AND IN COMPLIANCE WITH THE CURRENT VERSION OF THE NATIONAL ELECTRIC CODE. CONDUIT SHALL BE INSTALLED EITHER PARALLEL OR PERPENDICULAR TO THE DECK RIBS. USE FLEX CONDUIT FROM J-BOX TO LIGHT FIXTURE.
D. NO INTERIOR LIGHTING BRANCH CIRCUIT SHALL BE INSTALLED IN A MULTIWIRE BRANCH CIRCUIT CONFIGURATION. NEUTRAL CONDUCTORS SHALL NOT BE SHARED BETWEEN DIFFERENT CIRCUITS.
E. INSTALL 8'-0" LONG LED STRIP FIXTURES TO THE BOTTOM OF JOISTS, EITHER CENTERED ON JOIST BOTTOM OR PERPENDICULAR ACROSS MULTIPLE JOISTS. WHERE LIGHT FIXTURES ARE TO BE PLACED AT AN ANGLE TO THE JOISTS OR ARE TO BE LOCATED BETWEEN JOISTS, ATTACH FIXTURE TO CONTINUOUS RUNS OF GALVANIZED UNISTRUT WHICH HAVE BEEN SECURELY ANCHORED TO THE JOISTS.
F. EXIT AND EMERGENCY LIGHTS NOT MOUNTED ON WALLS OR JOISTS SHALL BE MOUNTED ON UNISTRUT BETWEEN JOISTS.
G. FRONT DOOR EXIT SIGN: SURFACE MOUNT ON WALL 12'-2" ABOVE FINISHED FLOOR TO BOTTOM OF FIXTURE MAN DOOR EXIT SIGN: SURFACE MOUNT ON WALL 9'-0" ABOVE FINISHED FLOOR TO BOTTOM OF FIXTURE. ALL OTHER EXIT SIGNS: MOUNT FIXTURE TO BOTTOM OF JOIST.
H. ALL NON-SWITCHED LIGHTING CIRCUITS TO BE CONTROLLED BY AUTOMATIC LIGHTING CONTROL PANEL. SEE LIGHTING CONTROL DIAGRAM FOR DETAILS AND REQUIREMENTS.

1/8" = 1'-0" ELN01LED

7 LIGHTING NOTES

REVISIONS					
1	REV1	2	REV2	3	REV3
4	REV4	5	REV5	6	REV6

AutoZone Store No. 6890
1593 N. MAIN ST.
LILLINGTON, NC 27546

LIGHTING PLANS AND DETAILS

ENGINEER: DANNY E. DOSS P.E.
132 Kelley Drive
Rogers, Arkansas 72756
TEL.: (479) 631-1712 FAX: (479) 631-1854
For Bidding & Contractor Information Contact:
Dodge Data & Analytics. Tel. 413-930-4215
Cindy.searcy@construction.com

05/06/20

65W2-R

E-3

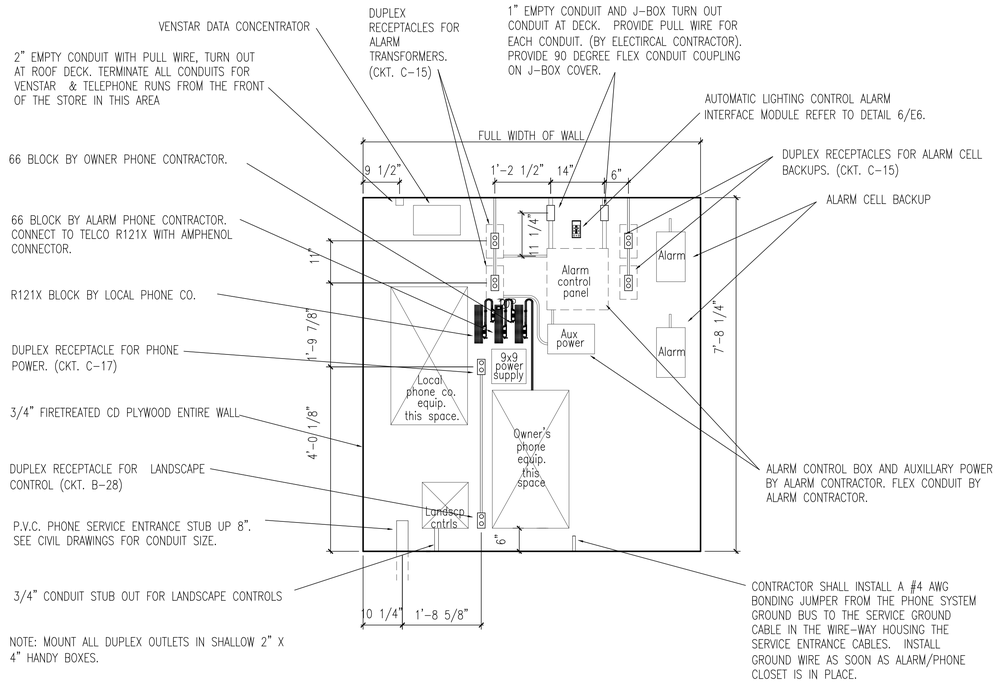

5/8" = 1'-0" EXS01

1 ALARM / PHONE BOARD REQUIREMENTS

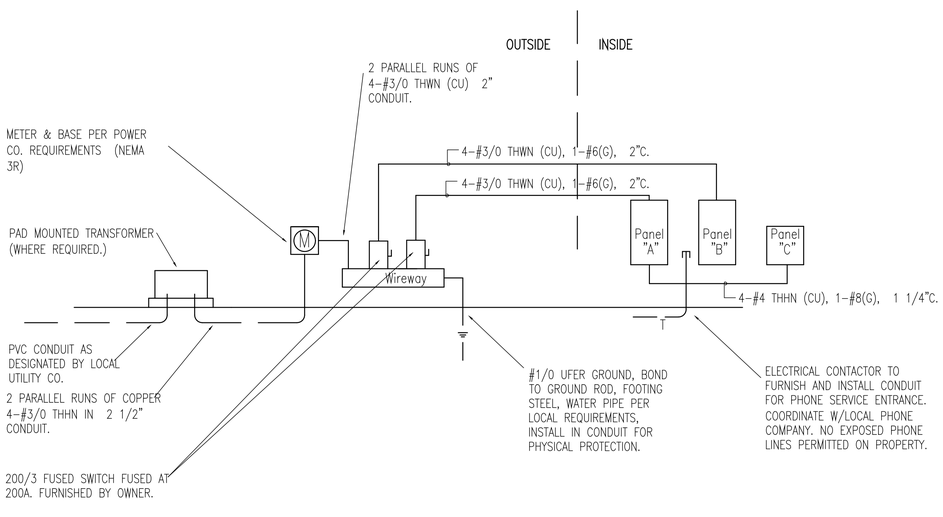

3/32" = 1'-0" EXD01

2 SCHEMATIC ONE LINE – ELECTRICAL SERVICE

VOLTS: 120/208 V.
PHASE: 3ø
WIRE: 4W

65w2 PANEL - A

LIGHTING
MAIN LUGS ONLY

MOUNTED: FLUSH
BUSSING: 225 AMPS
FEEDER: 200 AMPS
AIC RATING: 10,000 AIC

LOAD	A	B	C	BKR	CK		CK	BKR	A	B	C	LOAD
LED LIGHTS	1104			20/1	1		2	20/1	720			LED LIGHTS
LED LIGHTS		720			3		4			672		LED LIGHTS
LED LIGHTS			768		5		6				356	FRONT WALL SIGN
SPACE	----				7		8		----			SPACE
EXIT / EMERGENCY LIGHTS		75		20/1	9		10			----		SPACE
SPACE			----		11		12				----	SPACE
EXTERIOR BUILDING LIGHTS	180			20/1	13		14	20/1	----			SPACE
SITE LIGHTS		209		20/1	15		16			256		SIDE WALL SIGN
SITE LIGHTS			209	20/1	17		18	20/1			1224	PYLON SIGN
SITE LIGHTS	209			20/1	19		20		----			SPACE
SPACE		----			21		22	20/1		472		RESTROOM LIGHTS/FAN
SPACE			----		23		24				---	SPACE
SPACE	----				25		26		---			SPACE
WATER HEATER		1500		20/1	27		28			---		SPACE
SPACE			---		29		30				---	SPACE
SPACE	----				31		32		---			SPACE
SPACE		----			33		34			---		SPACE
SPACE			---		35		36				---	SPACE
SPACE	----				37		38	60/3	5568			LOAD CENTER
SPACE		----			39		40			5260		
SPACE			---		41		42				5560	
LIGHTING TOTAL	1493	1004	977						720	1400	1580	LIGHTING TOTAL
POWER TOTAL	0	1500	0						5568	5260	5560	POWER TOTAL
PANEL TOTAL	1493	2504	977						6288	6660	7140	PANEL TOTAL

NOTES:

Aø LIGHTING	2213	x 1.25	2766	+POWER	5568	TOTAL	8334	/120 =	69.5	A
Bø LIGHTING	2404	x 1.25	3005	+POWER	6760	TOTAL	9765	/120 =	81.4	A
Cø LIGHTING	2557	x 1.25	3196	+POWER	5560	TOTAL	8756	/120 =	73.0	A

VOLTS: 120/208 V.
PHASE: 3ø
WIRE: 4W

65w2 PANEL - B

POWER
MAIN LUGS ONLY

MOUNTED: FLUSH
BUSSING: 225 AMPS
FEEDER: 200 AMPS
AIC RATING: 10,000 AIC

LOAD	A	B	C	BKR	CK		CK	BKR	A	B	C	LOAD
RTU-1	6240			60/3	1		2	60/3	6240			RTU-2
10 TON		6240			3		4			6240		10 TON
			6240		5		6				6240	
SPACE	----				7		8		----			SPACE
SPACE		----			9		10			----		SPACE
SPACE			----		11		12				----	SPACE
RTU & EXT. RECEPT.	720			20/1	13		14		----			SPACE
BATTERY CHARGER		1487		20/1	15		16			----		SPACE
BATTERY CHARGER			1487	20/1	17		18				----	SPACE
BATTERY CHARGER	1487			20/1	19		20	20/1	1500			H.P. MINI-TUNE
BATTERY CHARGER		1487		20/1	21		22			----		SPACE
BATTERY CHARGER			1487	20/1	23		24	20/1			800	TESTER ACCESSORIES
ALC PANEL	480			20/1	25		26	20/1	360			DRINKING FOUNTAIN
SPACE		----			27		28	20/1		360		LANDSCAPE CONTROL
BREAK ROOM REFRIG.			1500	20/1	29		30	20/1			900	GEN. RECEPT. (SALES)
SPACE	----				31		32	20/1	1380			DRINK MACHINE
SPACE		----			33		34			----		SPACE
SPACE			----		35		36				----	SPACE
SPACE	----				37		38		----			SPACE
SPACE		----			39		40			----		SPACE
SPACE			----		41		42				----	SPACE
LIGHTING TOTAL	0	0	0						0	0	0	LIGHTING TOTAL
POWER TOTAL	8927	9214	10714						9480	6600	7940	POWER TOTAL
PANEL TOTAL	89827	9214	10714						9480	6600	7940	PANEL TOTAL

NOTES:
INSERT 20 AMP HIGH MAGNETIC BREAKER IN CIRCUIT B-20. BREAKER WILL COME WITH A YELLOW STICKER TO BE LEFT IN PLACE.

Aø LIGHTING	0	x 1.25	0	+POWER	18407	TOTAL	18407	/120 =	153.4	A
Bø LIGHTING	0	x 1.25	0	+POWER	15814	TOTAL	15814	/120 =	131.8	A
Cø LIGHTING	0	x 1.25	0	+POWER	18654	TOTAL	18654	/120 =	155.5	A

VOLTS: 120/208 V.
PHASE: 3ø
WIRE: 4W

65w2 PANEL - C

ELECTRONICS
MAIN LUGS ONLY

MOUNTED: FLUSH
BUSSING: 100 AMPS
FEEDER: 60 AMPS
AIC RATING: 10,000 AIC

LOAD	A	B	C	BKR	CK		CK	BKR	A	B	C	LOAD
CK. OUT REG. & PRN	1920			20/1	1		2	20/1	----			SPACE
SPACE		----			3		4			1920		OFFICE TRAINING
CCTV MONITOR			300		5		6				1920	OFFICE IT EQUIPMENT
POD #1	1920				7		8		928			EAS POST & ALARM
SPACE		----			9		10			1820		OFFICE UPS
POD #2			800		11		12				1820	COMMERCIAL
SPACE	----				13		14		800			COMMERCIAL
ALARM		720		20/1	15		16			800		COMMERCIAL
TEL. CO.			720		17		18				----	SPACE
SPACE	----				19		20		----			SPACE
SPACE		----			21		22			----		SPACE
SPACE			----		23		24				----	SPACE
LIGHTING TOTAL	----	----	----						----	----	----	LIGHTING TOTAL
POWER TOTAL	3840	720	1820						1728	4540	3740	POWER TOTAL
PANEL TOTAL	3840	720	1820						1728	4540	3740	PANEL TOTAL

Aø LIGHTING	0	x 1.25	0	+POWER	5568	TOTAL	5568	/120 =	46.4	A
Bø LIGHTING	0	x 1.25	0	+POWER	5260	TOTAL	5260	/120 =	43.8	A
Cø LIGHTING	0	x 1.25	0	+POWER	5560	TOTAL	5560	/120 =	46.3	A

LOAD TABULATION

TOTAL LOAD Aø= PANEL "A" 69.5 A + PANEL "B" 153.4 A, TOTAL =222.9 A
TOTAL LOAD Bø= PANEL "A" 81.4 A + PANEL "B" 131.8 A, TOTAL =213.2 A
TOTAL LOAD Cø= PANEL "A" 73.0 A + PANEL "B" 155.5 A, TOTAL =228.5 A

LARGEST PHASE = 228.5 + 25% OF LARGEST MOTOR (.25 x 20.5A = 5.1A) = 233.6 A

REVISIONS

1	REV1	2	REV2	3	REV3
4	REV4	5	REV5	6	REV6

AutoZone Store No. 6890
1593 N. MAIN ST.
LILLINGTON, NC 27546

PANELBOARD / 1-LINE DIAGRAMS AND DETAILS

ENGINEER: DANNY E. DOSS P.E.
132 Kelley Drive
Rogers, Arkansas 72756
TEL: (479) 631-1712 FAX: (479) 631-1854
For Bidding & Contractor Information Contact:
Dodge Data & Analytics. Tel. 413-930-4215
Cindy.searcy@construction.com

05/1/2020
NORTH CAROLINA PROFESSIONAL SEAL 12456 ENGINEER DANNY EUGENE DOSS

05/06/20

65W2-R

E-4

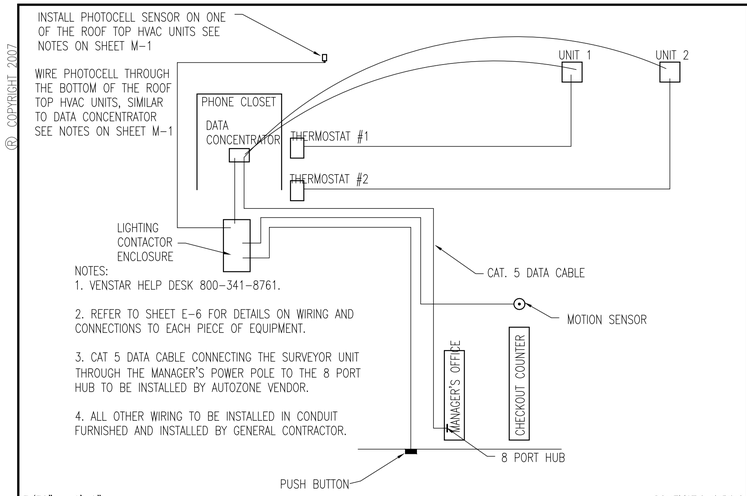

NOTES:
1. VENSTAR HELP DESK 800-341-8761.
2. REFER TO SHEET E-6 FOR DETAILS ON WIRING AND CONNECTIONS TO EACH PIECE OF EQUIPMENT.
3. CAT 5 DATA CABLE CONNECTING THE SURVEYOR UNIT THROUGH THE MANAGER'S POWER POLE TO THE 8 PORT HUB TO BE INSTALLED BY AUTOZONE VENDOR.
4. ALL OTHER WIRING TO BE INSTALLED IN CONDUIT FURNISHED AND INSTALLED BY GENERAL CONTRACTOR.

3/32" = 1'-0" SCHEMATIC WIRING

1 SCHEMATIC WIRING DIAGRAM – VENSTAR / LIGHTING CONTROL PANEL

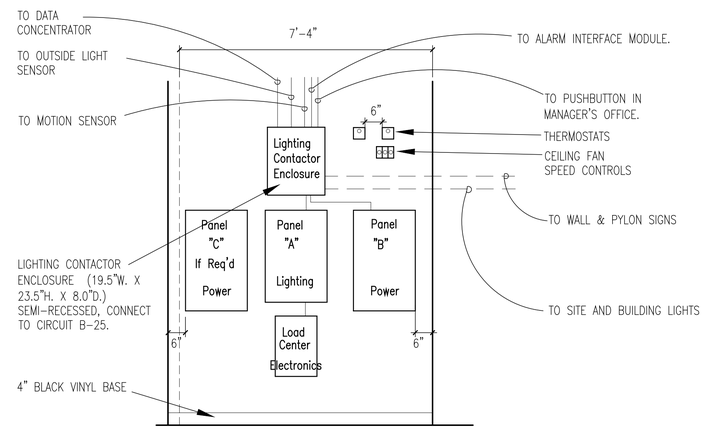

REFER TO PANELBOARD SCHEDULE FOR LIGHTING CIRCUIT NUMBERS.

1/2" = 1'-0" EXS03

2 PANELBOARD – DIAGRAM

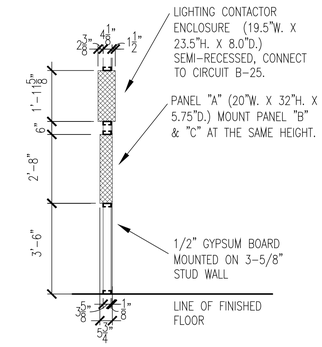

3/8 = 1'-0" EXS04

3 PANELBOARD – MOUNTING HEIGHT SECTION

4 NOT USED

LINE VOLTAGE CONNECTIONS FROM CIRCUIT BREAKER PANEL TO TOP TERMINALS OF CONTACTORS CONTROL CIRCUIT.

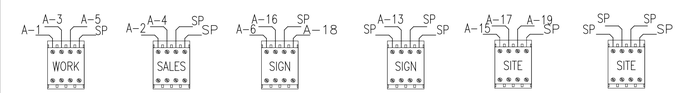

LOAD CONNECTIONS TO LIGHTS ON BOTTOM TERMINALS.

3" = 1'-0" EXD0365W2

5 LIGHTING CONTROL SCHEDULE

REVISIONS

1	REV1	4	REV4
2	REV2	5	REV5
3	REV3	6	REV6

AutoZone Store No. 6890
1593 N. MAIN ST.
LILLINGTON, NC 27546

LIGHTING CONTROL PANEL AND DETAILS

ENGINEER: DANNY E. DOSS P.E.
132 Kelley Drive
Rogers, Arkansas 72756
TEL: (479) 631-1712 FAX: (479) 631-1854
For Bidding & Contractor Information Contact:
Dodge Data & Analytics. Tel. 413-930-4215
Cindy.searcy@construction.com

05/06/20

65W2-R

E-5

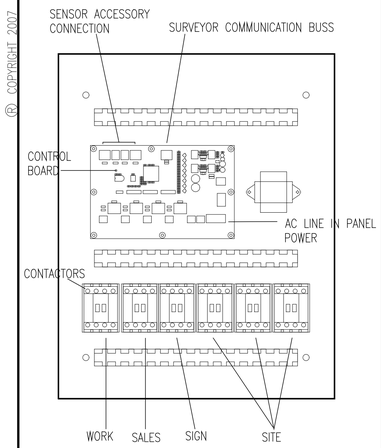

3" = 1'-0" VENSTAR1

1 LOCATION OF CONTROLS

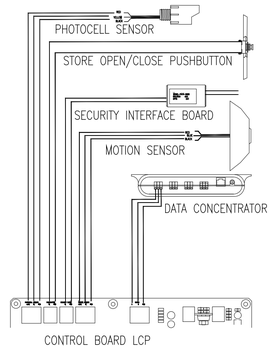

1' = 1'-0" VENSTAR2

2 WIRING DIAGRAM – LCP

1 MOUNT THE PUSHBUTTON IN A STANDARD 2 X 4 JUNCTION BOX SEE THE ELECTRIC PLAN FOR LOCATION

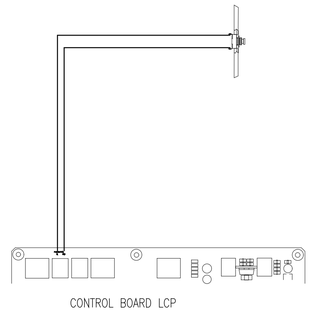

6" = 1'-0" VENSTAR3

3 OPEN / CLOSE BUTTON

1 MOUNT THE PHOTOCELL ON THE ROOF FACING NORTH, SEE ARCHITECTURAL DRAWINGS FOR DETAILS

2 CONNECT THE BLACK WIRE TO GND, THE YELLOW WIRE TO IN, AND THE RED WIRE TO +24V

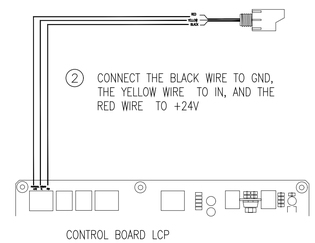

6" = 1'-0" VENSTAR4

4 PHOTOCELL SENSOR

1 MOUNT THE MOTION SENSORS IN LOCATIONS SHOWN IN THE LIGHTING PLAN

2 CONNECT THE BLACK WIRE TO GND, THE BLUE WIRE TO IN, AND THE RED WIRE TO +24V

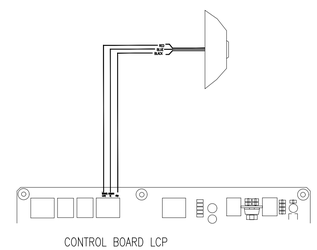

6" = 1'-0" VENSTAR5

5 MOTION SENSOR

1 MOUNT THE INTERFACE DEVICE ON THE BOARD IN THE TELEPHONE CLOSET SEE DETAIL SHEET E-4

TO BUILDING SECURITY SYSTEM

ALARM INTERFACE CONNECTION

2 CONNECT THE BLACK WIRE TO GND, AND THE WHITE WIRE TO IN.

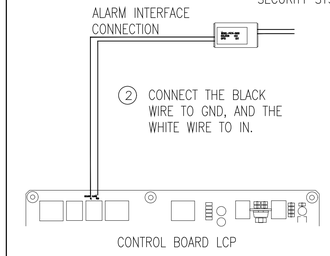

6" = 1'-0" VENSTAR6

6 ALARM INTERFACE

UNLESS NOTED ON SHEET M-1 FOR THE CONTRACTOR TO FIELD INSTALL ALL VENSTAR SENSORS AND EQUIPMENT; THE EQUIPMENT CONTROL PAC (ECP) WILL BE FACTORY INSTALLED INSIDE EACH HVAC UNIT. THE FACTORY INSTALLATION WILL INCLUDE ALL SENSORS SHOWN BELOW EXCEPT THE OUTDOOR TEMP AND REMOTE SENSORS WHICH ARE TO BE INSTALLED AND WIRED BY THE HVAC SUBCONTRACTOR.

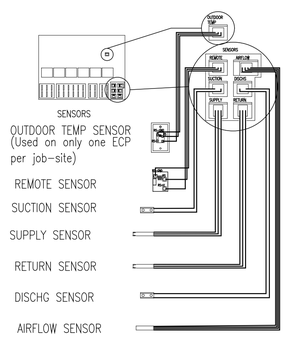

3" = 1'-0" VENSTAR7

7 ECP SENSOR CONNECTIONS

IF DRAWINGS INDICATE THAT SENSORS AND EQUIPMENT ARE TO BE FIELD INSTALLED, THEN MOUNT SENSORS AS SHOWN IN THE DIAGRAM BELOW. ATTACH SENSORS TO PIPE USING ZIP TIES.

1 MOUNT THE DISCHARGE SENSOR AS CLOSE TO THE INLET OF THE CONDENSER AS POSSIBLE.

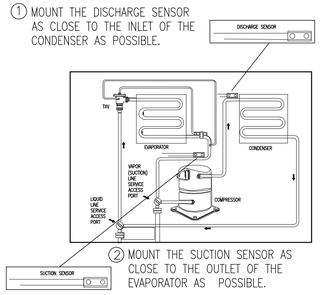

2 MOUNT THE SUCTION SENSOR AS CLOSE TO THE OUTLET OF THE EVAPORATOR AS POSSIBLE.

1' = 1'-0" VENSTAR8

8 LOCATION OF SENSORS

MOUNT REMOTE TEMPERATURE SENSOR ON RETURN AIR DUCT AS INDICATED IN THE ISOMETRIC DRAWING THIS SHEET.

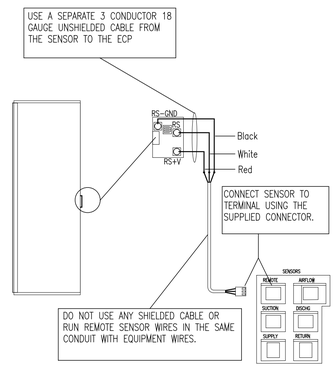

1' = 1'-0" VENSTAR9

9 LOCATION OF SENSORS

MOUNT OUTDOOR TEMPERATURE SENSOR ON VERTICAL EXTERIOR FACE OF HVAC UNIT NEAR THE TOP OF THE UNIT. DO NOT MOUNT ON ACCESS DOOR OR PANELS. ONLY ONE PER STORE IS REQUIRED.

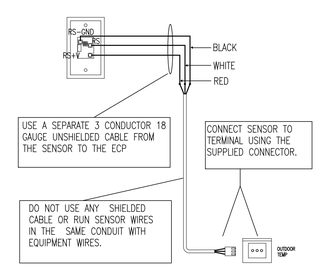

1' = 1'-0" VENSTAR10

10 LOCATION OF SENSORS

IF DRAWINGS INDICATE THAT SENSORS AND EQUIPMENT ARE TO BE FIELD INSTALLED, THEN MOUNT THE AIRFLOW SENSOR, SUPPLY SENSOR, RETURN SENSOR WHERE SHOWN IN THE DIAGRAM BELOW. IN ALL CASES THE CONTRACTOR WILL MOUNT THE REMOTE TEMP SENSOR AND THE OUTSIDE SENSOR WHERE INDICATED IN THIS DRAWING.

1 AIRFLOW SENSOR MOUNT THE AIRFLOW SENSOR IN THE SUPPLY AIR DUCT.

2 SUPPLY SENSOR MOUNT THE SUPPLY SENSOR IN THE SUPPLY AIR DUCT.

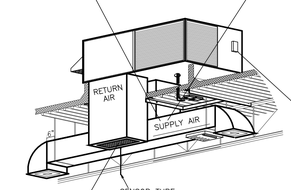

YORK ROOFTOP UNIT-VIEW OF RTU SEE SHEET M-1.1 FOR ADDITIONAL INFO.

3 RETURN SENSOR MOUNT THE RETURN AIR SENSOR ON THE RETURN AIR DUCT.

4 OUTSIDE SENSOR MOUNT THE OUTSIDE SENSOR ON THE SIDE OF THE HVAC UNIT.

5/16" = 1'-0" SENSOR LOCATION

11 SENSOR LOCATION

IF DRAWINGS INDICATE THAT SENSORS AND EQUIPMENT ARE TO BE FIELD INSTALLED, THEN CONNECT HVAC TERMINAL BLOCK TO EQUIPMENT CONTROL PAC USING 18 GAUGE WIRE PER THE DIAGRAM OR TABLE BELOW.

MOUNT EQUIPMENT CONTROL PAC INSIDE THE HVAC UNIT

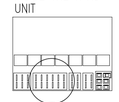

Wire from the HVAC terminal block marked	Function	Install on the EPC connector marked
G or F	Fan	G
Y1, Y or C	Cooling	Y1
W1, W or H	Heating	W1, O, B
Rh, R, M, Vr, A	Power	R
C	Common	C *
O/B	Rev. Valve	W1, O, B **
W2	2nd Stage Heat	W2
Y2	2nd Stage Cool	Y2

* C may not be used on all systems
** O/B is used for Heat Pumps only

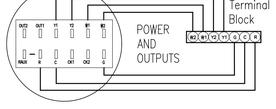

3" = 1'-0" VENSTAR11

12 HVAC CONNECTIONS

CONNECT THERMOSTATS TO EQUIPMENT CONTROL PAC USING 18 GAUGE WIRE PER THE DIAGRAM BELOW.

MOUNT EQUIPMENT CONTROL PAC INSIDE THE HVAC UNIT

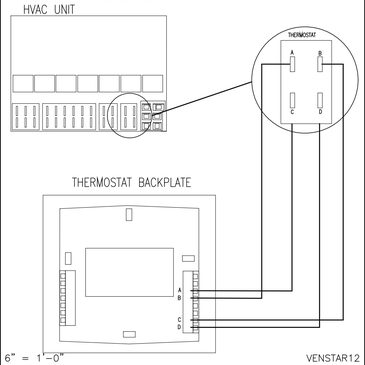

6" = 1'-0" VENSTAR12

13 THERMOSTAT CONNECTIONS

CONNECT ECONOMIZER, IF REQUIRED TO EQUIPMENT CONTROL PAC USING 18 GAUGE WIRE PER THE DIAGRAM BELOW.

MOUNT EQUIPMENT CONTROL PAC INSIDE THE HVAC UNIT

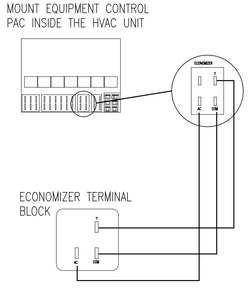

3" = 1'-0" VENSTAR13

14 ECONOMIZER CONNECTIONS

CONTRACTOR TO CONNECT EACH EQUIPMENT CONTROL PACS TO THE DATA CONCENTRATOR USING 18 GAUGE WIRE PER THE DIAGRAM BELOW. ADDITIONALLY, RUN 4 CONDUCTOR 18 GAUGE WIRE BETWEEN THE DATA CONCENTRATOR AND EACH HVAC UNIT LEAVING 5 FOOT OF WIRE AT EACH END; AND RUN ONE 22/2 GAUGE PLENUM RATED WIRE BETWEEN EACH UNIT AND THE DATA CONCENTRATOR, LEAVE 10 FEET OF WIRE IN THE UNIT AND 2 FEET AT THE DATA CONCENTRATOR.

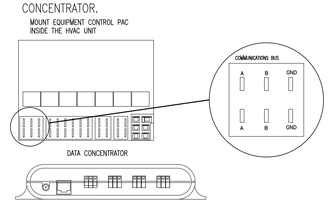

IMPORTANT NOTE:
EACH HVAC UNIT / EQUIPMENT CONTROL PAC IS CONNECTED INDIVIDUALLY TO THE DATA CONCENTRATOR, IF MORE THAN FOUR EQUIPMENT CONTROL PACS ARE INSTALLED, THE ADDITIONAL UNIT SHALL BE RUN BACK TO THE DATA CONCENTRATOR AND CONNECTED TO ONE OR MORE OF THE TERMINALS WHICH ALREADY HAVE UNITS CONNECTED TO THEM.

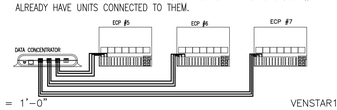

1' = 1'-0" VENSTAR14

15 CONCENTRATOR CONNECTIONS

VENSTAR CONTROL WIRING GENERAL NOTES – PROTOTYPE

1. AUTOZONE WILL FURNISH VENSTAR LIGHTING AND HVAC CONTROL DEVICES AS INDICATED ON THIS SHEET, CONTRACTOR WILL FURNISH ALL OTHER MATERIAL AND LABOR REQUIRED TO COMPLETE THE INSTALLATION.

2. UNLESS NOTED OTHERWISE ELSEWHERE IN THE DRAWINGS ROOF TOP UNITS WILL COME WITH FACTORY INSTALLED SUCTION, DISCHARGE, SUPPLY, RETURN AND AIRFLOW SENSORS, AS WELL AS AN EQUIPMENT CONTROL PAC INSIDE THE UNIT. THE OUTDOOR TEMP. AND REMOTE TEMP. SENSORS ARE TO BE INSTALLED BY CONTRACTOR. MOUNT THE DATA CONCENTRATOR ON THE PHONE BOARD UPPER LEFT HAND SIDE ABOVE THE LOCAL PHONE COMPANY'S EQUIPMENT SPACE, AND MOUNT THE LIGHTING CONTROL UNIT AND THERMOSTATS ON THE WALL ABOVE THE ELECTRIC PANELS, ALL AS INDICATED ON DRAWINGS.

3. ALL WIRING TO BE RUN IN 1/2" CONDUIT.

4. FOLLOW VENSTAR INSTALLATION INSTRUCTIONS OUTLINED ON THIS SHEET. FOR ANY QUESTIONS OR CLARIFICATIONS CONTACT AUTOZONE'S PROJECT MANAGER.

5. AUTOZONE'S VENDOR WILL RUN ONE CATEGORY 5 DATA CABLE FROM THE DATA CONCENTRATOR IN THE TELEPHONE CLOSET DOWN THROUGH THE POWER POLE IN THE MANAGER'S OFFICE AREA IN ORDER TO ACTIVATE THE COMMUNICATIONS.

6. NORMALLY THE HVAC CONTRACTOR WILL INSTALL ALL HVAC SENSORS AND WIRING FOR SAME, AND THE ELECTRICAL CONTRACTOR WILL INSTALL LIGHTING CONTROL PANEL, ALL ACCESSORIES, DATA CONCENTRATOR AND DATA CABLE.

7. CONTRACTOR MAY USE ONE OF THE CONTACTORS DEDICATED TO SIGNAGE FOR ADDITIONAL SITE LIGHT CIRCUITS IF NEEDED. CONTRACTOR WILL NEED TO CHANGE THE CONTACTORS CONNECTION ON THE CONTROL BOARD TO MATCH THE SITE LIGHT CONTACTORS.

8. THE PHONE NUMBER FOR VENSTAR TECHNICAL SERVICES IS: 818-812-9812.

1/8" = 1'-0" VENSTAR-TEXT

16 CONTROL WIRING GENERAL NOTES

REVISIONS

1	REV1	2	REV2	3	REV3
4	REV4	5	REV5	6	REV6

AutoZone Store No. 6890
1593 N. MAIN ST.
LILLINGTON, NC 27546

VENSTAR HVAC AND LIGHTING CONTROL

ENGINEER: DANNY E. DOSS P.E.
132 Kelley Drive
Rogers, Arkansas 72756
TEL: (479) 631-1712 FAX: (479) 631-1854
For Bidding & Contractor Information Contact:
Dodge Data & Analytics, Tel. 413-930-4215
Cindy.searcy@construction.com

05/14/2020
NORTH CAROLINA PROFESSIONAL SEAL 12456 ENGINEER DANNY EUGENE DOSS

05/06/20

65W2-R

E-6