ROOF MOUNT PHOTOVOLTAIC SYSTEM

CODES:

THIS PROJECT COMPLIES WITH THE FOLLOWING:
2018 NORTH CAROLINA BUILDING CODE
2018 NORTH CAROLINA RESIDENTIAL CODE
2018 NORTH CAROLINA PLUMBING CODE
2018 NORTH CAROLINA MECHANICAL CODE
2018 NORTH CAROLINA FUEL GAS CODE
2017 NATIONAL ELECTRICAL CODE
AS ADOPTED BY COUNTY OF HARNETT

VICINITY MAP:

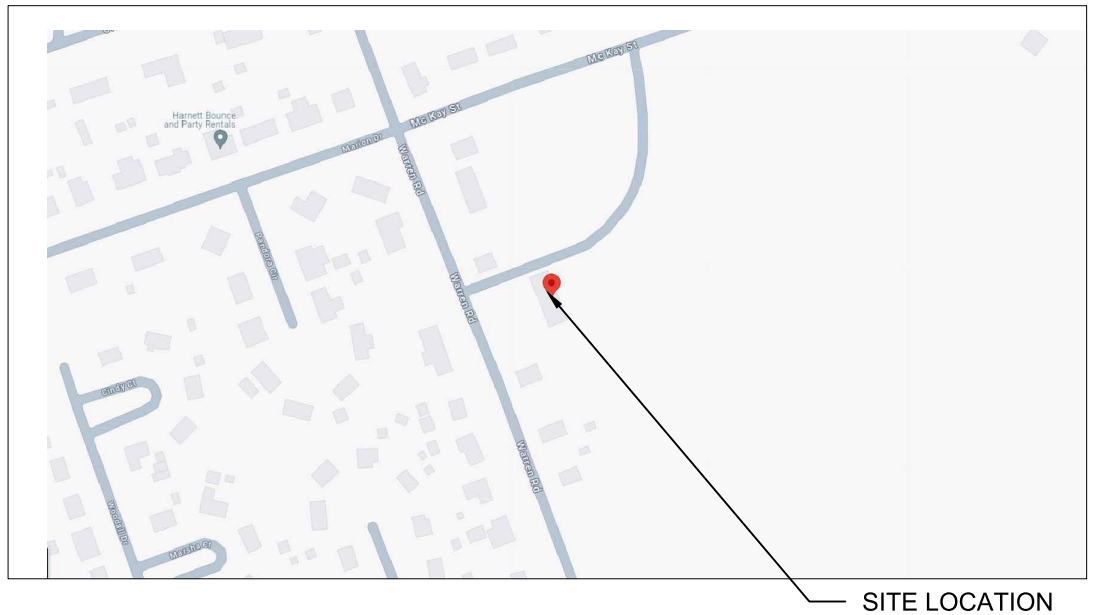

TABLE OF CONTENTS:

CONSTRUCTION NOTES:

CONDUIT AND CONDUCTOR SPECIFICATIONS ARE BASED ON MINIMUM CODE REQUIREMENTS AND ARE NOT MEANT TO LIMIT UP-SIZING AS REQUIRED BY FIELD CONDITIONS.

ALL SOLAR ENERGY SYSTEM EQUIPMENT SHALL BE SCREENED TO THE MAXIMUM EXTENT POSSIBLE AND SHALL BE PAINTED A COLOR SIMILAR TO THE SURFACE UPON WHICH THEY ARE MOUNTED.

MODULES SHALL BE TESTED , LISTED AND INDENTIFIED WITH FIRE CLASSIFICATION IN ACCORDANCE WITH UL 2703. SMOKE AND CARBON MONOXIDE ALARMS ARE REQUIRED PER SECTION R314 AND 315 TO BE VERIFIED AND INSPECTED BY INSPECTOR IN THE FIELD.

DIG ALERT (811) TO BE CONTACTED AND COMPLIANCE WITH EXCAVATION SAFETY PRIOR TO ANY EXCAVATION TAKING PLACE

PHOTOVOLTAIC SYSTEM GROUND WILL BE TIED INTO EXISTING GROUND AT MAIN SERVICE FROM DC DISCONNECT/INVERTER AS PER 2017 NEC SEC 250.166(A).

SOLAR PHOTOVOLTAIC SYSTEM EQUIPMENT WILL BE INSTALLED IN ACCORDANCE WITH REQUIREMENTS OF ART. 690 OF THE 2017 NEC

THE MAIN SERVICE PANEL WILL BE EQUIPPED WITH A GROUND ROD OR UFER

UTILITY COMPANY WILL BE NOTIFIED PRIOR TO ACTIVATION OF THE SOLAR PV SYSTEM

SOLAREDGE OPTIMIZERS ARE LISTED TO IEC 62109-1 (CLASS II SAFETY) AND UL 1741 STANDARDS

INSTALL CREW TO VERIFY ROOF STRUCTURE PRIOR TO COMMENCING WORK. EMT CONDUIT ATTACHED TO THE ROOF USING CONDUIT MOUNT.

NORTH CAROLINA PROFESSIONAL SEAL 052976 ENGINEER Xiaojian Xie

XIAOJIAN XIE

Digitally signed by XIAOJIAN XIE
Date: 2024.06.08 08:53:42 -04'00'

CLIENT:
GEOFFREY STODDARD
600 WARREN ROAD, ERWIN, NC 28339
AHJ: COUNTY OF HARNETT
UTILITY: DUKE ENERGY
METER: 329 524 333
APN: 060597 0201
PHONE: (910) 389-0043
EMAIL: GEOFFREYSTODDARD@GMAIL.COM

SYSTEM:
SYSTEM SIZE (DC): 62 X 385 = 23.870 kW
SYSTEM SIZE (AC): 17.600 kW @ 240V
MODULES: 62 X JINKO SOLAR:
JKM385M-6RL3-B
OPTIMIZERS: 62 X SOLAREDGE S440
INVERTER 1: SOLAREDGE SE7600H-USRGM [SI1]
INVERTER 2: SOLAREDGE SE10000H-USRGM [SI1]
BATTERY: 4 X TESLA: POWERWALL 2

1

REVISIONS		
NO.	REVISED BY	DATE
1	J.R.L.	6/3/2024
-	-	-
-	-	-

freedom FOREVER

FREEDOM FOREVER LLC
415 INDUSTRIAL CT., GREER, SC 29651
Tel: (800) 385-1075

GREG ALBRIGHT

CONTRACTOR LICENSE:
ELECTRICAL CONTRACTOR U.34043

JOB NO:	DATE:	DESIGNED BY:	SHEET:
397697	6/7/2024	J.R.L.	PV-1

LEGEND:

- CHIMNEY
- PIPE VENT
- MODULES
- CONDUIT
- SETBACK
- UM — UTILITY METER
- JB — JUNCTION BOX
- INV — INVERTER
- TBG — TESLA BACKUP GATEWAY 2
- MSP — MAIN SERVICE PANEL

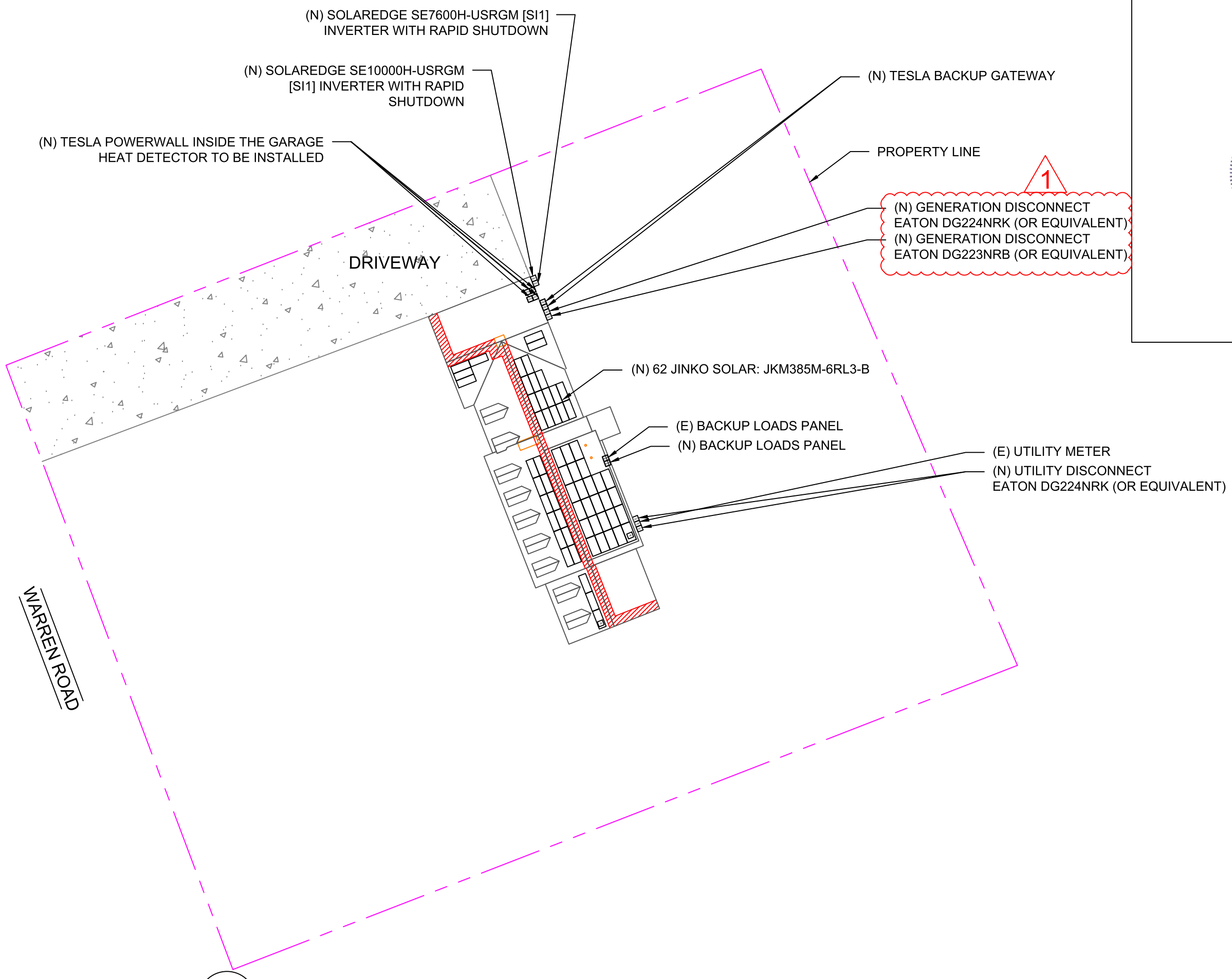

SITE PLAN
SCALE: 1/32" = 1'-0"

1

NORTH CAROLINA PROFESSIONAL SEAL 052976 ENGINEER Xiaojian Xie

ROOF AREA: 5590.93 SQ FT

CLIENT:
GEOFFREY STODDARD
600 WARREN ROAD, ERWIN, NC 28339
AHJ: COUNTY OF HARNETT
UTILITY: DUKE ENERGY
METER: 329 524 333
APN: 060597 0201
PHONE: (910) 389-0043
EMAIL: GEOFFREYSTODDARD@GMAIL.COM

SYSTEM:
SYSTEM SIZE (DC): 62 X 385 = 23.870 kW
SYSTEM SIZE (AC): 17.600 kW @ 240V
MODULES: 62 X JINKO SOLAR:
JKM385M-6RL3-B
OPTIMIZERS: 62 X SOLAREDGE S440
INVERTER 1: SOLAREDGE SE7600H-USRGM
[SI1]
INVERTER 2: SOLAREDGE SE10000H-USRGM
[SI1]
BATTERY: 4 X TESLA: POWERWALL 2

	REVISIONS	
NO.	REVISED BY	DATE
1	J.R.L.	6/3/2024
-	-	-
-	-	-

freedom FOREVER

FREEDOM FOREVER LLC
415 INDUSTRIAL CT., GREER, SC 29651
Tel: (800) 385-1075
GREG ALBRIGHT

CONTRACTOR LICENSE:
ELECTRICAL CONTRACTOR U.34043

SITE PLAN

JOB NO:	DATE:	DESIGNED BY:	SHEET:
397697	6/7/2024	J.R.L.	PV-2

LEGEND:

- CHIMNEY
- PIPE VENT
- MODULES
- CONDUIT
- SETBACK
- UM — UTILITY METER
- JB — JUNCTION BOX
- INV — INVERTER
- TBG — TESLA BACKUP GATEWAY 2
- MSP — MAIN SERVICE PANEL

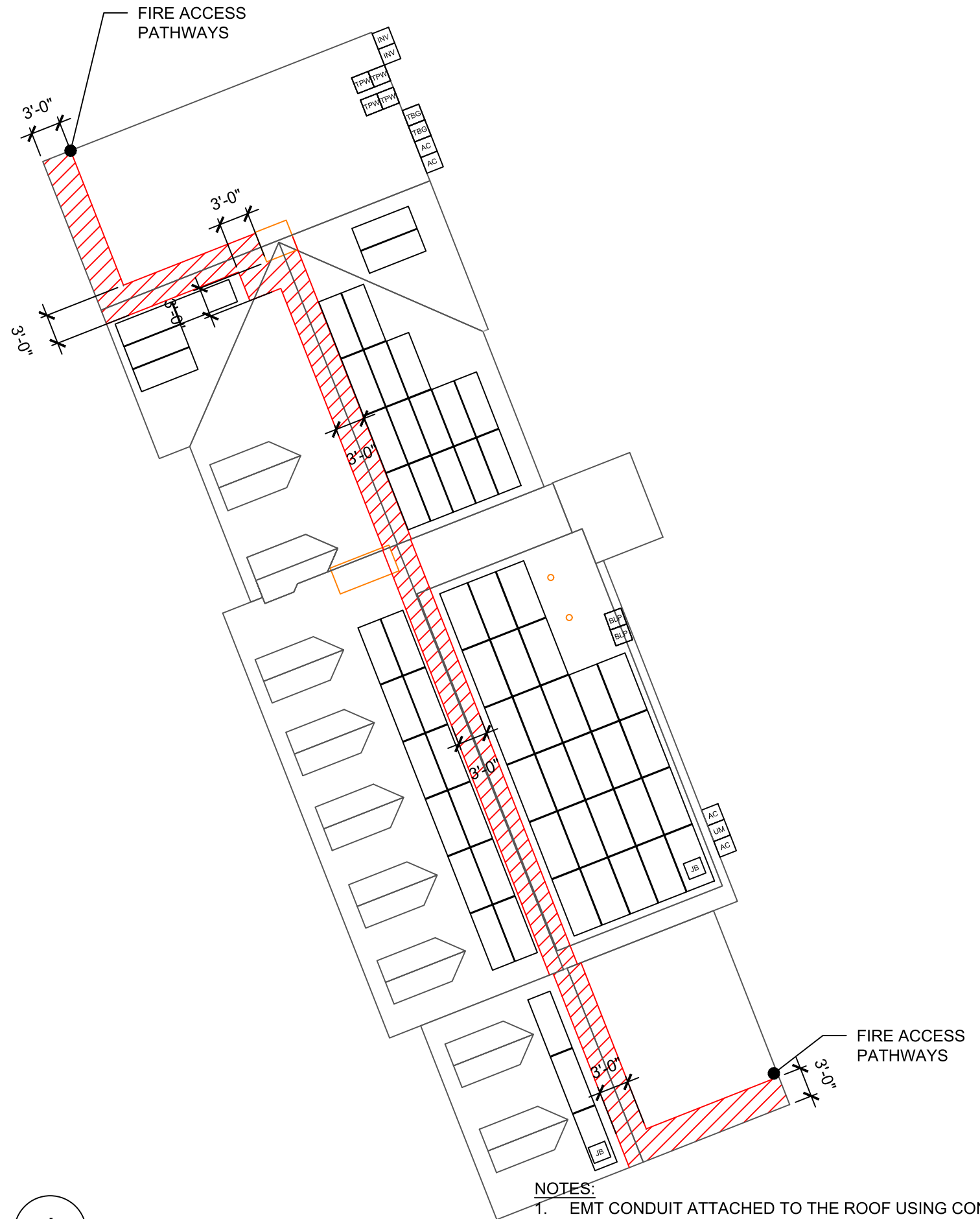

TOTAL ROOF AREA: 5590.93 SQ FT
TOTAL ARRAY AREA: 1273.87 SQ FT
ARRAY COVERAGE: 22.78%
SYSTEM DISTRIBUTED WEIGHT: 2.29 LBS
ROCKIT SMART SLIDE POINT-LOAD: 28.83 LBS

NOTES:
1. EMT CONDUIT ATTACHED TO THE ROOF USING CONDUIT MOUNTS
2. ATTACHED CLAMPS AT 25% FROM THE EDGE AND 50% FROM THE CENTER OF THE MODULES
3. JUNCTION BOX IS MOUNTED TO THE RAIL.

ROOF PLAN
SCALE: 2/25" = 1'-0"

1

NORTH CAROLINA PROFESSIONAL SEAL 052976 ENGINEER Xiaojian Xie

ROOF AREA: 5590.93 SQ FT

CLIENT:
GEOFFREY STODDARD
600 WARREN ROAD, ERWIN, NC 28339
AHJ: COUNTY OF HARNETT
UTILITY: DUKE ENERGY
METER: 329 524 333
APN: 060597 0201
PHONE: (910) 389-0043
EMAIL: GEOFFREYSTODDARD@GMAIL.COM

SYSTEM:
SYSTEM SIZE (DC): 62 X 385 = 23.870 kW
SYSTEM SIZE (AC): 17.600 kW @ 240V
MODULES: 62 X JINKO SOLAR: JKM385M-6RL3-B
OPTIMIZERS: 62 X SOLAREDGE S440
INVERTER 1: SOLAREDGE SE7600H-USRGM [SI1]
INVERTER 2: SOLAREDGE SE10000H-USRGM [SI1]
BATTERY: 4 X TESLA: POWERWALL 2

	REVISIONS	
NO.	REVISED BY	DATE
1	J.R.L.	6/3/2024
-	-	-
-	-	-

freedom FOREVER

FREEDOM FOREVER LLC
415 INDUSTRIAL CT., GREER, SC 29651
Tel: (800) 385-1075
GREG ALBRIGHT

CONTRACTOR LICENSE:
ELECTRICAL CONTRACTOR U.34043

ROOF PLAN WITH MODULES LAYOUT

JOB NO:	DATE:	DESIGNED BY:	SHEET:
397697	6/7/2024	J.R.L.	PV-2A

ROOF DETAILS:

TOTAL ROOF AREA: 5590.93 SQ FT
TOTAL ARRAY AREA: 1273.87 SQFT
ARRAY COVERAGE: 22.78%
SYSTEM DISTRIBUTED WEIGHT: 2.29 LBS
ROCKIT SMART SLIDE POINT-LOAD: 28.83 LBS

ROOF AREA STATEMENT						
ROOF	MODULE QUANTITY	ROOF PITCH	ARRAY PITCH	AZIMUTH	ROOF AREA	ARRAY AREA
ROOF 1	4	45	45	159	550 SQ FT	82.19 SQ FT
ROOF 2	15	45	45	69	552 SQ FT	308.19 SQ FT
ROOF 3	26	28	28	69	780 SQ FT	534.2 SQ FT
ROOF 4	12	45	45	249	967 SQ FT	246.56 SQ FT
ROOF 5	3	45	45	249	369 SQ FT	61.64 SQ FT
ROOF 6	2	45	45	459	550 SQ FT	41.09 SQ FT
----	----	----	----	----	SQ FT	SQ FT
----	----	----	----	----	SQ FT	SQ FT
----	----	----	----	----	SQ FT	SQ FT
----	----	----	----	----	SQ FT	SQ FT

CLIENT:
GEOFFREY STODDARD
600 WARREN ROAD, ERWIN, NC 28339
AHJ: COUNTY OF HARNETT
UTILITY: DUKE ENERGY
METER: 329 524 333
APN: 060597 0201
PHONE: (910) 389-0043
EMAIL: GEOFFREYSTODDARD@GMAIL.COM

SYSTEM:
SYSTEM SIZE (DC): 62 X 385 = 23.870 kW
SYSTEM SIZE (AC): 17.600 kW @ 240V
MODULES: 62 X JINKO SOLAR: JKM385M-6RL3-B
OPTIMIZERS: 62 X SOLAREDGE S440
INVERTER 1: SOLAREDGE SE7600H-USRGM [SI1]
INVERTER 2: SOLAREDGE SE10000H-USRGM [SI1]
BATTERY: 4 X TESLA: POWERWALL 2

REVISIONS		
NO.	REVISED BY	DATE
1	J.R.L.	6/3/2024
-	-	-
-	-	-

FREEDOM FOREVER LLC
415 INDUSTRIAL CT., GREER, SC 29651
Tel: (800) 385-1075
GREG ALBRIGHT

CONTRACTOR LICENSE:
ELECTRICAL CONTRACTOR U.34043

ARRAY DETAILS

JOB NO:	DATE:	DESIGNED BY:	SHEET:
397697	6/7/2024	J.R.L.	PV-2B

TABLE 1 – ARRAY INSTALLATION

	ROOF PITCH	ROOFING TYPE	ATTACHMENT TYPE	FRAMING TYPE	MAX UNBRACED LENGTH(FT.)	STRUCTURAL ANALYSIS RESULT	PENETRATION PATTERN	MAX ATTACHMENT SPACING (IN.)	MAX RAIL OVERHANG(IN.)
ROOF 1	45	Comp Shingle	Ecofasten Rocklt Smart Slide	2x8 @ 16" O.C.	7	PASS	STAGGERED	64	21.33333
ROOF 2	45	Comp Shingle	Ecofasten Rocklt Smart Slide	2x8 @ 16" O.C.	7	PASS	STAGGERED	64	21.33333
ROOF 3	28	Comp Shingle	Ecofasten Rocklt Smart Slide	2x8 @ 16" O.C.	7	PASS	STAGGERED	64	21.33333
ROOF 4	45	Comp Shingle	Ecofasten Rocklt Smart Slide	2x8 @ 16" O.C.	7	PASS	STAGGERED	64	21.33333
ROOF 5	45	Comp Shingle	Ecofasten Rocklt Smart Slide	2x8 @ 16" O.C.	7	PASS	STAGGERED	64	21.33333
ROOF 6	45	Comp Shingle	Ecofasten Rocklt Smart Slide	2x8 @ 16" O.C.	7	PASS	STAGGERED	64	21.33333

1. CONTRACTOR TO VERIFY FRAMING TYPE AND MAX UNBRACED LENGTH PRIOR TO INSTALLATION. IF THE ABOVE INFORMATION DOES NOT MATCH FIELD CONDITIONS, NOTIFY ENGINEER OF RECORD IMMEDIATELY.

2. WHERE COLLAR TIES OR RAFTER SUPPORTS EXIST, CONTRACTOR SHALL USE RAFTERS WITH COLLAR TIES AS ATTACHMENT POINTS.

1

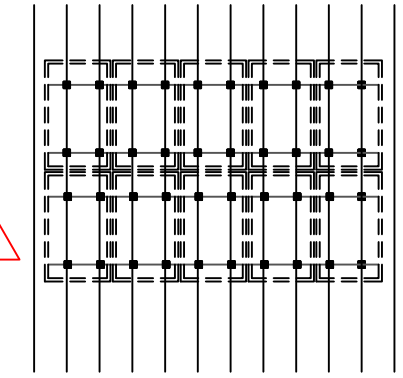

STACKED DETAIL

For Illustration purposes only

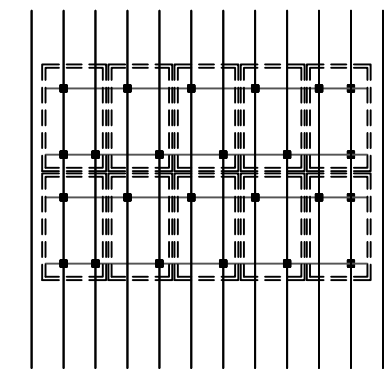

STAGGERED DETAIL

For Illustration purposes only

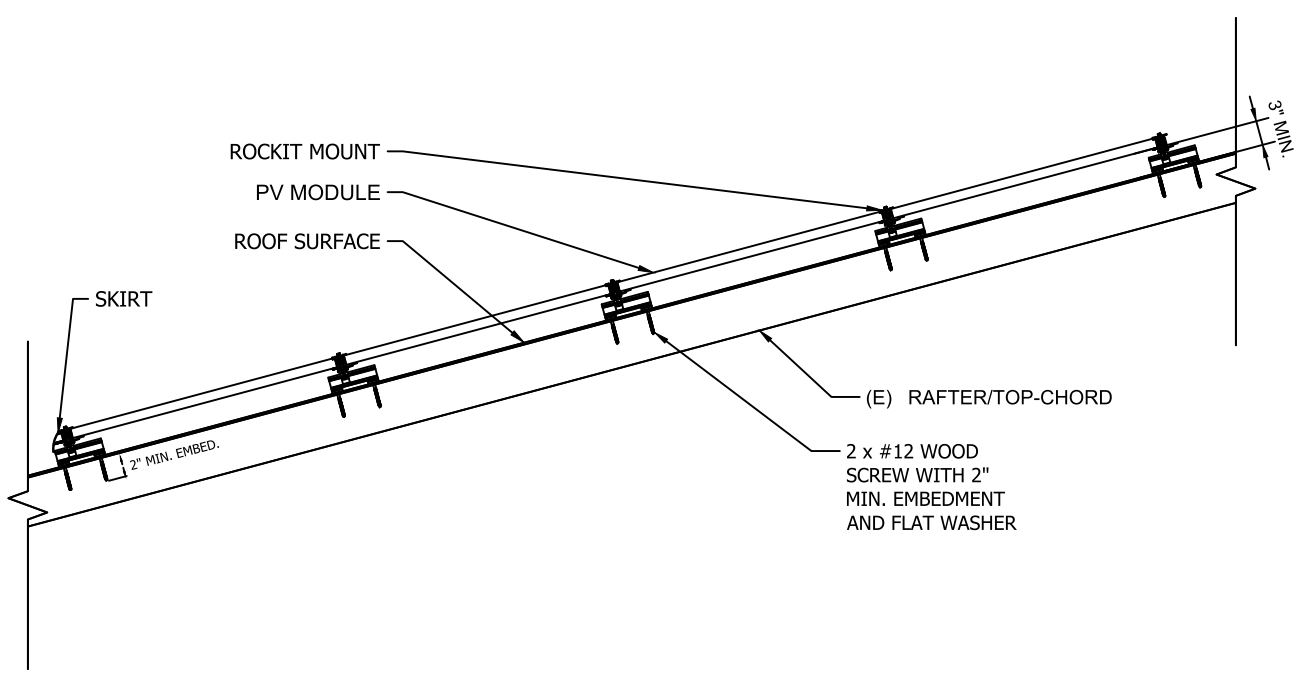

SOLAR PV ARRAY SECTION VIEW

Scale: NTS

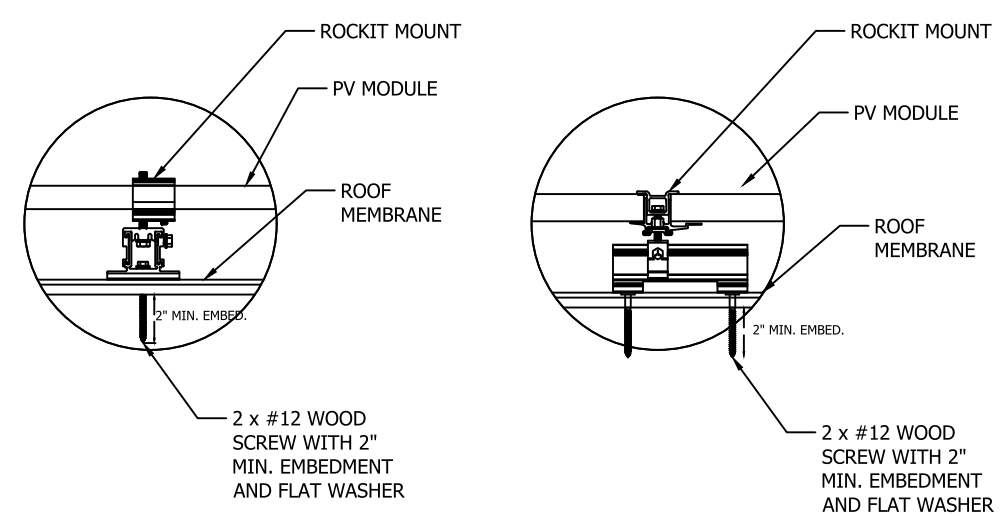

ATTACHMENT DETAIL

Scale: NTS

CLIENT:
GEOFFREY STODDARD
600 WARREN ROAD, ERWIN, NC 28339
AHJ: COUNTY OF HARNETT
UTILITY: DUKE ENERGY
METER: 329 524 333
APN: 060597 0201
PHONE: (910) 389-0043
EMAIL: GEOFFREYSTODDARD@GMAIL.COM

SYSTEM:
SYSTEM SIZE (DC): 62 X 385 = 23.870 kW
SYSTEM SIZE (AC): 17.600 kW @ 240V
MODULES: 62 X JINKO SOLAR: JKM385M-6RL3-B
OPTIMIZERS: 62 X SOLAREDGE S440
INVERTER 1: SOLAREDGE SE7600H-USRGM [SI1]
INVERTER 2: SOLAREDGE SE10000H-USRGM [SI1]
BATTERY: 4 X TESLA: POWERWALL 2

	REVISIONS	
NO.	REVISED BY	DATE
1	J.R.L.	6/3/2024
-	-	-
-	-	-

freedom FOREVER

FREEDOM FOREVER LLC
415 INDUSTRIAL CT., GREER, SC 29651
Tel: (800) 385-1075
GREG ALBRIGHT

CONTRACTOR LICENSE:
ELECTRICAL CONTRACTOR U.34043

MOUNTING DETAILS

JOB NO:	DATE:	DESIGNED BY:	SHEET:
397697	6/7/2024	J.R.L.	PV-3

BACKFEED BREAKER SIZING					
MAX. CONTINUOUS OUTPUT 32.00A @ 240V					
32	X	1.25	=	40.00AMPS	40A BREAKER - OK
42	X	1.25	=	52.50AMPS	60A BREAKER - OK
MSP IN COMPLIANCE WITH SUM OF BREAKERS NEC 705.12(B)(3)(3)					

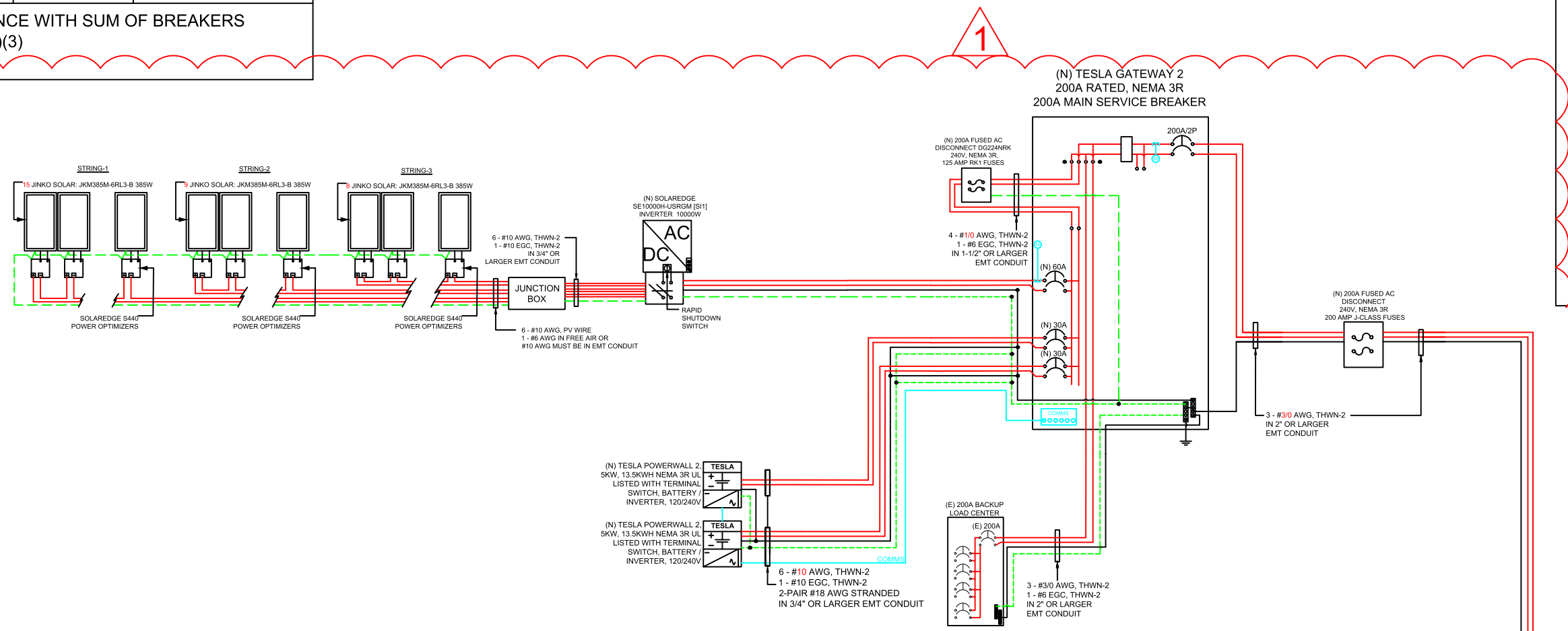

NOTE:
CONDUIT AND CONDUCTORS SPECIFICATIONS ARE BASED ON MINIMUM CODE REQUIREMENTS AND ARE NOT MEANT TO LIMIT UP-SIZING AS REQUIRED BY FIELD CONDITIONS

CLIENT:
GEOFFREY STODDARD
600 WARREN ROAD, ERWIN, NC 28339
AHJ: COUNTY OF HARNETT
UTILITY: DUKE ENERGY
METER: 329 524 333
APN: 060597 0201
PHONE: (910) 389-0043
EMAIL: GEOFFREYSTODDARD@GMAIL.COM

SYSTEM:
SYSTEM SIZE (DC): 62 X 385 = 23.870 kW
SYSTEM SIZE (AC): 17.600 kW @ 240V
MODULES: 62 X JINKO SOLAR: JKM385M-6RL3-B
OPTIMIZERS: 62 X SOLAREDGE S440
INVERTER 1: SOLAREDGE SE7600H-USRGM [SI1]
INVERTER 2: SOLAREDGE SE10000H-USRGM [SI1]
BATTERY: 4 X TESLA: POWERWALL 2

REVISIONS		
NO.	REVISED BY	DATE
1	J.R.L.	6/3/2024
-	-	-
-	-	-

FREEDOM FOREVER LLC
415 INDUSTRIAL CT., GREER, SC 29651
Tel: (800) 385-1075
GREG ALBRIGHT

CONTRACTOR LICENSE:
ELECTRICAL CONTRACTOR U.34043

THREE LINE DIAGRAM

JOB NO:	DATE:	DESIGNED BY:	SHEET:
397697	6/7/2024	J.R.L.	PV-4

WIRE SCHEDULE												
RACEWAY #	EQUIPMENT				CONDUCTOR QTY.	AWG WIRE SIZE	STARTING ALLOWABLE AMPACITY @ 90°C 310.15(B)(16)	STARTING CURRENT APPLIED TO CONDUCTORS IN RACEWAY	TEMPERATURE CORRECTION FACTOR 310.15(B)(2)(a)	ADJUSTMENT FACTOR FOR MORE THAN 3 CONDUCTORS 310.15(B)(3)(a)	ADJUSTED CONDUCTOR AMPACITY @ 90°C	MAXIMUM CURRENT APPLIED TO CONDUCTORS IN RACEWAY
1	DC	MODULE	TO	OPTIMIZER	2	10	40	14.03	0.91	1	36.40	17.53
2	DC	OPTIMIZER	TO	JUNCTION BOX	2	10	40	15.00	0.91	1	36.40	18.75
3	DC	JUNCTION BOX	TO	INVERTER	4	10	40	15.00	0.91	1	36.40	18.75
4	AC	INVERTER	TO	TESLA GATEWAY 2 A	3	8	55	32.00	0.91	1	50.05	40.00
5	AC	GENERATION SOURCES	TO	GENERATION AC DISCONNECT	4	3	115	76.00	0.91	0.8	83.72	95.00
6	AC	GENERATION AC DISCONNECT	TO	TESLA GATEWAY 2 A	4	3	115	76.00	0.91	0.8	83.72	95.00
7	AC	BACKUP LOAD CENTER A	TO	TESLA GATEWAY 2 A	3	3/0	225	200.00	0.91	1	204.75	200.00
8	AC	TESLA GATEWAY 2 A	TO	UTILITY METER	3	3/0	225	200.00	0.91	1	204.75	200.00
9	DC	MODULE	TO	OPTIMIZER	2	10	40	14.03	0.91	1	36.40	17.53
10	DC	OPTIMIZER	TO	JUNCTION BOX	6	10	40	15.00	0.91	1	36.40	18.75
11	DC	JUNCTION BOX	TO	INVERTER	2	10	40	15.00	0.91	1	36.40	18.75
12	AC	INVERTER	TO	TESLA GATEWAY 2 B	3	6	75	42.00	0.91	1	68.25	52.50
13	AC	GENERATION SOURCES	TO	GENERATION AC DISCONNECT	3	3	115	86.00	0.91	1	104.65	107.50
14	AC	GENERATION AC DISCONNECT	TO	TESLA GATEWAY 2 B	3	3	115	86.00	0.91	1	104.65	107.50
15	AC	BACKUP LOAD CENTER B	TO	TESLA BACKUP GATEWAY 2 B	3	3/0	225	200.00	0.91	1	204.75	200.00
16	AC	GENERATION SOURCES	TO	AC GENERATION DISCONNECT	4	1/0	170	120.00	0.91	0.8	123.76	120.00
17	AC	AC GENERATION DISCONNECT	TO	TESLA BACKUP GATEWAY 2	4	1/0	170	120.00	0.91	0.8	123.76	120.00
18	AC	TESLA BACKUP GATEWAY 2 B	TO	CLASS J FUSED AC DISCO	3	2/0	195	200.00	0.91	1	177.45	200.00
19	AC	CLASS J FUSED AC DISCO	TO	UTILITY METER	3	3/0	225	200.00	0.91	1	204.75	200.00

CONDUCTOR AMPACITY CALCULATIONS IN ACCORDANCE WITH NEC 690.8.

CLIENT:
GEOFFREY STODDARD
600 WARREN ROAD, ERWIN, NC 28339
AHJ: COUNTY OF HARNETT
UTILITY: DUKE ENERGY
METER: 329 524 333
APN: 060597 0201
PHONE: (910) 389-0043
EMAIL: GEOFFREYSTODDARD@GMAIL.COM

SYSTEM:
SYSTEM SIZE (DC): 62 X 385 = 23.870 kW
SYSTEM SIZE (AC): 17.600 kW @ 240V
MODULES: 62 X JINKO SOLAR: JKM385M-6RL3-B
OPTIMIZERS: 62 X SOLAREDGE S440
INVERTER 1: SOLAREDGE SE7600H-USRGM [SI1]
INVERTER 2: SOLAREDGE SE10000H-USRGM [SI1]
BATTERY: 4 X TESLA: POWERWALL 2

REVISIONS		
NO.	REVISED BY	DATE
1	J.R.L.	6/3/2024
-	-	-
-	-	-

FREEDOM FOREVER LLC
415 INDUSTRIAL CT., GREER, SC 29651
Tel: (800) 385-1075

GREG ALBRIGHT

CONTRACTOR LICENSE:
ELECTRICAL CONTRACTOR U.34043

CONDUCTOR CALCULATIONS

JOB NO:	DATE:	DESIGNED BY:	SHEET:
397697	6/7/2024	J.R.L.	PV-5

OCPD SIZES:

40A BREAKER
60A BREAKER
30A BREAKER
30A BREAKER
30A BREAKER

SERVICE LIST:

NONE

MATERIAL LIST:

QTY.	PART	PART #	DESCRIPTION
62	110 - MODULES	PV-118-385-2	"MFG: JINKO, 385W MONO BOB, MFG SKU: JKM385M-6RL3-B"
1	120 - INVERTERS	INV-120-768	"MFG: SOLAREDGE, 7.6 KW RGM SCREENLESS W/CONSUMPTION MONITORING, MFG SKU: SE7600H-US000BEI4"
1	120 - INVERTERS	INV-120-108	"MFG: SOLAREDGE, 10.0 KW RGM SCREENLESS W/CONSUMPTION MONITORING, MFG SKU: SE10000H-US000BEI4"
2	180 - MONITORING EQUIPMENT	ME-180-502	"MFG: SOLAREDGE, CELL MODEM W/5 YRS, MFG SKU: SE-CELL-B-R05-US-S-S2"
62	130 - OPTIMIZERS	OPT-130-440-2	"MFG: SOLAREDGE, 440W 60V OPTIMIZER, MFG SKU: S440"
5	260 - FITTINGS/ANCHORS	RAC-261-527	"MFG: UNIRAC, JUNCTION BOX, COMP SHINGLE AND RAIL MOUNT APPLICATIONS, MFG SKU: SOLOBOX-D"
5	210 - RAILS	RAC-211-201	"MFG: UNIRAC, E-BOSS J-BOX MOUNTING BRACKET, MFG SKU: 00802JB"
1	320 - DISCONNECTS	EE-321-101	"MFG: EATON, DISCONNECT, GENERAL DUTY, 2P, 240V, 100A, FUSIBLE W/ NEUTRAL, NEMA 3R, MFG SKU: DG223NRB"
1	320 - DISCONNECTS	EE-321-201	"MFG: EATON, DISCONNECT, GENERAL DUTY, 2P, 240V, 200A, FUSIBLE W/ NEUTRAL, NEMA 3R, MFG SKU: DG224NRK"
4	140 - BATTERIES	BAT-141-000	"MFG: TESLA, POWERWALL 2.0, AC 13.5KWH BATTERY, MFG SKU: 3012170-05-A"
1	160 - EQUIPMENT ACCESSORIES	EA-160-000	"MFG: TESLA, ENERGY GATEWAY 2, ONE GATEWAY FOR N. AMERICAN MARKET & ONE TESLA 100A CT & ONE TESLA CT EXTENSION CABLE HARNESS, MFG SKU: 1232100-00-E"
1	160 - EQUIPMENT ACCESSORIES	EA-160-002	"MFG: TESLA, POWERWALL 2 ACCESSORY BAG (N. AMERICA), ADDITIONAL POWERWALL 2 ACCESSORY BAG FOR N. AMERICAN MARKET, MFG SKU: 1104517-00-F"
1	160 - EQUIPMENT ACCESSORIES	EA-160-003	"MFG: TESLA, MULTI PW STACKING KIT, FOR STACKED POWERWALL INSTALLS, MFG SKU: 1112154-00-B / 1112154-00-C"
1	160 - EQUIPMENT ACCESSORIES	EA-160-004	"MFG: TESLA, TESLA 100A CT, ADDITIONAL TESLA 100A CT (1 COUNT), MFG SKU: 1467316-00-B"
1	160 - EQUIPMENT ACCESSORIES	EA-160-006	"MFG: TESLA, INTERNAL PANELBOARD KIT, OPTIONAL INTERNAL PANELBOARD KIT WITH WIRE JUMPERS AND BREAKER HOLD-DOWN BAR, MFG SKU: 1529623-01-C"
1	160 - EQUIPMENT ACCESSORIES	EA-160-007	"MFG: TESLA, 2"" CONDUIT HUB KIT, 2"" CONDUIT HUBS AND BOLTS, MFG SKU: 1549184-00-C"
1	160 - EQUIPMENT ACCESSORIES	EA-160-009	"MFG: TESLA, NEURIO W2 200A CTS (2 COUNT), MFG SKU: 1622277-00-A"
1	160 - EQUIPMENT ACCESSORIES	EA-160-012	"MFG: TESLA, NEURIO METER KIT W/ 200A CTS (2 COUNT), MFG SKU: 1112484-04-A /1112484-99-A"
12	350 - ELECTRICAL ACCESSORIES	EA-350-326	"MFG: STAUBLI MULTI-CONTACT, MC4 CONNECTORS (FEMALE), MFG SKU: PV-KBT4/6I-UR"
12	350 - ELECTRICAL ACCESSORIES	EA-350-327	"MFG: STAUBLI MULTI-CONTACT, MC4 CONNECTORS (MALE), MFG SKU: PV-KST4/6I-UR"
101	260 - FITTINGS/ANCHORS	RAC-265-034	"MFG: ECO FASTEN, ROCKIT SMART SLIDE BLK 6 - 75"", MFG SKU: 2011024"
80	260 - FITTINGS/ANCHORS	RAC-261-602	"MFG: UNIRAC, SFM 2"" MICRORAIL, MFG SKU: 250020U"
372	260 - FITTINGS/ANCHORS	RAC-265-004	"MFG: ECO FASTEN, ROCKIT COMP COUPLING AL BLK, MFG SKU: 2011021"
1	260 - FITTINGS/ANCHORS	RAC-265-028	"MFG: ECO FASTEN, SKIRT AL BLK 35MM & 40MM A80, MFG SKU: 2099012"
1	260 - FITTINGS/ANCHORS	RAC-265-031	"MFG: ECO FASTEN, SKIRT END CAP PLS 35MM&40MM-A, MFG SKU: 2099035"
62	260 - FITTINGS/ANCHORS	RAC-265-018	"MFG: ECO FASTEN, FRAME MLPE MOUNT SS, MFG SKU: 4011012"
1	260 - FITTINGS/ANCHORS	RAC-260-049	"MFG: EZ SOLAR, JUNCTION BOX, PV, MFG SKU: JB-1.2"
1	260 - FITTINGS/ANCHORS	RAC-263-101	"MFG: SNAP N RACK, WIRE SAVER, TOP AND BOTTOM, MFG SKU: 242-92262"
101	260 - FITTINGS/ANCHORS	RAC-265-034	"MFG: ECO FASTEN, ROCKIT SMART SLIDE BLK 6 - 75"", MFG SKU: 2011024"
404	260 - FITTINGS/ANCHORS	RAC-265-035	"MFG: ECO FASTEN, ROCKIT SCREW #12X3"" W/BW, MFG SKU: 2011025"
5	350 - ELECTRICAL ACCESSORIES	EA-350-585	"MFG: ILSCO, GROUND LUG, MFG SKU: SGB-4"
101	260 - FITTINGS/ANCHORS	RAC-265-003	"MFG: ECO FASTEN, ROCKIT MOUNT AL BLK, MFG SKU: 2011020"
1	260 - FITTINGS/ANCHORS	RAC-263-509	"MFG: SNAP N RACK, CONDUIT SUPPORT FOR COMP, MFG SKU: 242-02730"

CLIENT:
GEOFFREY STODDARD
600 WARREN ROAD, ERWIN, NC 28339
AHJ: COUNTY OF HARNETT
UTILITY: DUKE ENERGY
METER: 329 524 333
APN: 060597 0201
PHONE: (910) 389-0043
EMAIL: GEOFFREYSTODDARD@GMAIL.COM

SYSTEM:
SYSTEM SIZE (DC): 62 X 385 = 23.870 kW
SYSTEM SIZE (AC): 17.600 kW @ 240V
MODULES: 62 X JINKO SOLAR:
JKM385M-6RL3-B
OPTIMIZERS: 62 X SOLAREDGE S440
INVERTER 1: SOLAREDGE SE7600H-USRGM [SI1]
INVERTER 2: SOLAREDGE SE10000H-USRGM [SI1]
BATTERY: 4 X TESLA: POWERWALL 2

	REVISIONS	
NO.	REVISED BY	DATE
1	J.R.L.	6/3/2024
-	-	-
-	-	-

freedom FOREVER

FREEDOM FOREVER LLC
415 INDUSTRIAL CT., GREER, SC 29651
Tel: (800) 385-1075

GREG ALBRIGHT

CONTRACTOR LICENSE:
ELECTRICAL CONTRACTOR U.34043

EQUIPMENT & SERVICE LIST

JOB NO:	DATE:	DESIGNED BY:	SHEET:
397697	6/7/2024	J.R.L.	PV-6

MAIN PHOTOVOLTAIC SYSTEM DISCONNECT
690.13(B)

DO NOT DISCONNECT UNDER LOAD
NEC 690.15 (B) & NEC 690.33(D)(2)

⚠ WARNING
SINGLE 120-VOLT SUPPLY
DO NOT CONNECT
MULTIWIRE BRANCH CIRCUITS
NEC 710.15(C) & 692.9 (C)

⚠ WARNING DUAL POWER SOURCE
SECOND SOURCE IS PHOTOVOLTAIC SYSTEM
NEC 705.12(D) & NEC 690.59

⚠ WARNING
TURN OFF PHOTOVOLTAIC AC DISCONNECT PRIOR TO WORKING INSIDE PANEL
NEC 110.27(C) & OSHA 1910.145(F)(7)

⚠ WARNING
ELECTRICAL SHOCK HAZARD
TERMINALS ON THE LINE AND LOAD SIDES MAY BE ENERGIZED IN THE OPEN POSITION
706.15(C)(4) & 690.13(B)

⚠ WARNING
THIS EQUIPMENT FED BY MULTIPLE SOURCES:
TOTAL RATING OF ALL OVERCURRENT DEVICES EXCLUDING MAIN POWER SUPPLY SHALL NOT EXCEED AMPACITY OF BUSBAR
NEC 705.12(B)(3)(3)

⚠ WARNING
THE DISCONNECTION OF THE GROUNDED CONDUCTOR(S) MAY RESULT IN OVERVOLTAGE ON THE EQUIPMENT
NEC 690.31(E)

RAPID SHUTDOWN SWITCH FOR SOLAR PV SYSTEM
690.56(C)(3)

Battery Disconnecting Means
Nominal battery voltage: 240V
Nominal available short circuit current derived from the stationary battery system: 22A
Date of calculation: _____

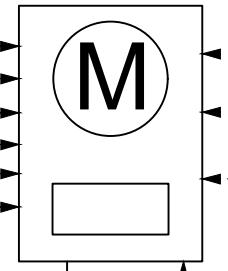

SOLAR PV SYSTEM EQUIPPED WITH RAPID SHUTDOWN

TURN RAPID SHUTDOWN SWITCH TO THE "OFF" POSITION TO SHUT DOWN PV SYSTEM AND REDUCE SHOCK HAZARD IN THE ARRAY

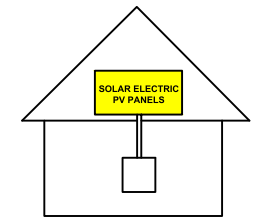

IFC 605.11.3.1(1) & 690.56(C)

⚠ CAUTION
PHOTOVOLTAIC SYSTEM CIRCUIT IS BACKFED
NEC 705.12(D) & NEC 690.59

⚠ WARNING
POWER SOURCE OUTPUT CONNECTION. DO NOT RELOCATE THIS OVERCURRENT DEVICE.
NEC 705.12(C) & NEC 690.59

⚠ WARNING
ARC FLASH AND SHOCK HAZARD
APPROPRIATE PPE REQUIRED
24 INCH FLASH HAZARD BOUNDARY
3 CAL/CM^2 FLASH HAZARD AT 18 INCHES
480 VAC SHOCK HAZARD WHEN COVER IS REMOVED
42 INCH LIMITED APPROACH
12 INCH RESTRICTED APPROACH - 500 V CLASS 00 GLOVES
1 INCH PROHIBITED APPROACH - 500 V CLASS 00 GLOVES
LOCATION: 600 WARREN ROAD,ERWIN, NC 28339
NEC 706.15(C) AND NEC 110.16

PHOTOVOLTAIC AC DISCONNECT
NEC 690.13(B)

PHOTOVOLTAIC AC DISCONNECT

RATED AC OUTPUT CURRENT:	32.00A
NOMINAL OPERATING AC VOLTAGE:	240V

NEC 690.54

⚠ WARNING DUAL POWER SOURCE
SECOND SOURCE IS PHOTOVOLTAIC SYSTEM
NEC 705.12(D) & NEC 690.59

SOLAR PV DC CIRCUIT
EVERY 10' ON CONDUIT AND ENCLOSURES
NEC 690.31

PHOTOVOLTAIC POWER SOURCE
EVERY 10' ON CONDUIT AND ENCLOSURES
NEC 690.31(D)(2)

MAXIMUM VOLTAGE	480	V
MAXIMUM CIRCUIT CURRENT	20	A
MAX DC-DC CONVERTER OUTPUT CURRENT	15	A

PHOTOVOLTAIC DC DISCONNECT
NEC 690.13(B)

MAXIMUM DC VOLTAGE OF PV SYSTEM
NEC 690.53

⚠ WARNING
ELECTRICAL SHOCK HAZARD
TERMINALS ON THE LINE AND LOAD SIDES MAY BE ENERGIZED IN THE OPEN POSITION
DC VOLTAGE IS ALWAYS PRESENT WHEN SOLAR MODULES ARE EXPOSED TO SUNLIGHT
706.15(C)(4) & 690.13(B)

⚠ WARNING
ELECTRICAL SHOCK HAZARD
TERMINALS ON THE LINE AND LOAD SIDES MAY BE ENERGIZED IN THE OPEN POSITION
706.15(C)(4) & 690.13(B)

⚠ WARNING
TURN OFF PHOTOVOLTAIC AC DISCONNECT PRIOR TO WORKING INSIDE PANEL
NEC 110.27(C) & OSHA 1910.145(F)(7)

ARRAY

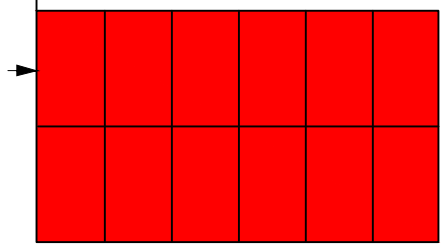

NEC 690.31(G)(3) & (4)

NOTES:

1. NEC ARTICLES 690 AND 705 AND IRC SECTION R324 MARKINGS SHOWN HEREON.
2. ALL MARKING SHALL CONSIST OF THE FOLLOWING:
   A. UV RESISTANT SIGN MATERIAL WITH ENGRAVED OR MACHINE PRINTED LETTERS OR ELECTRO-PLATING.
   B. RED BACKGROUND COLOR WHITE TEXT AND LINE WORK.
   C. ARIAL FONT.
3. ALL SIGNS SHALL BE SIZED APPROPRIATELY AND PLACED IN THE LOCATIONS SPECIFIED. SIGNAGE CANNOT BE HAND-WRITTEN.
4. SIGNS SHALL BE ATTACHED TO THE SERVICE EQUIPMENT WITH POP-RIVETS OR SCREWS

CLIENT:
GEOFFREY STODDARD
600 WARREN ROAD, ERWIN, NC 28339
AHJ: COUNTY OF HARNETT
UTILITY: DUKE ENERGY
METER: 329 524 333
APN: 060597 0201
PHONE: (910) 389-0043
EMAIL: GEOFFREYSTODDARD@GMAIL.COM

SYSTEM:
SYSTEM SIZE (DC): 62 X 385 = 23.870 kW
SYSTEM SIZE (AC): 17.600 kW @ 240V
MODULES: 62 X JINKO SOLAR: JKM385M-6RL3-B
OPTIMIZERS: 62 X SOLAREDGE S440
INVERTER 1: SOLAREDGE SE7600H-USRGM [SI1]
INVERTER 2: SOLAREDGE SE10000H-USRGM [SI1]
BATTERY: 4 X TESLA: POWERWALL 2

REVISIONS

NO.	REVISED BY	DATE
1	J.R.L.	6/3/2024
-	-	-
-	-	-

freedom FOREVER
FREEDOM FOREVER LLC
415 INDUSTRIAL CT., GREER, SC 29651
Tel: (800) 385-1075
GREG ALBRIGHT
CONTRACTOR LICENSE:
ELECTRICAL CONTRACTOR U.34043

LABELS

JOB NO:	DATE:	DESIGNED BY:	SHEET:
397697	6/7/2024	J.R.L.	PV-7

CAUTION:

POWER TO THIS BUILDING IS ALSO SUPPLIED FROM THE FOLLOWING SOURCES WITH DISCONNECTS AS SHOWN

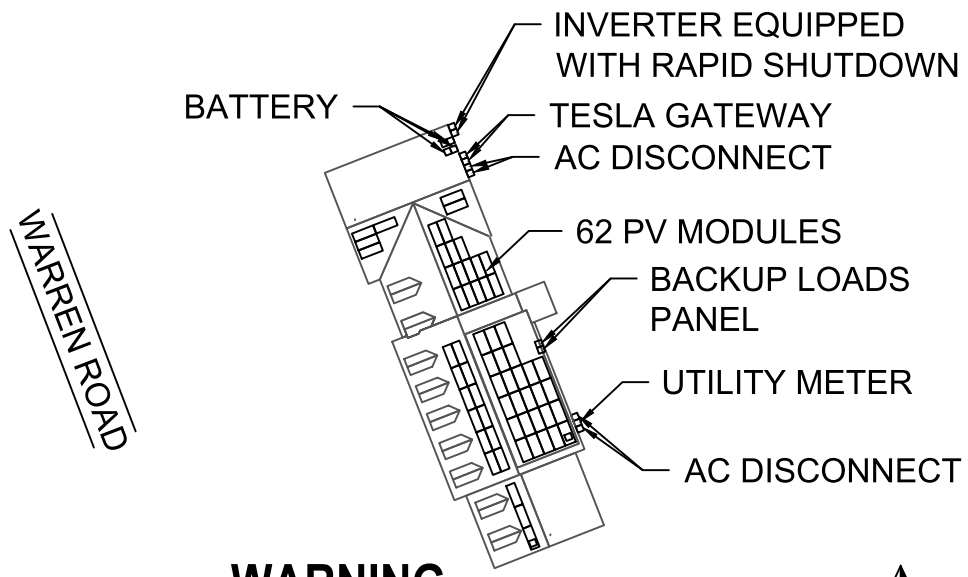

WARNING

TURN OFF PHOTOVOLTAIC AC DISCONNECT PRIOR TO WORKING INSIDE PANEL

N

NOTES:

1. NEC ARTICLES 690 AND 705 AND IRC SECTION R324 MARKINGS SHOWN HEREON.
2. ALL MARKING SHALL CONSIST OF THE FOLLOWING:
   - A. UV RESISTANT SIGN MATERIAL WITH ENGRAVED OR MACHINE PRINTED LETTERS OR ELECTRO-PLATING.
   - B. RED BACKGROUND COLOR WHITE TEXT AND LINE WORK.
   - C. AERIAL FONT.
3. ALL SIGNS SHALL BE SIZED APPROPRIATELY AND PLACED IN THE LOCATIONS SPECIFIED. SIGNAGE CANNOT BE HAND-WRITTEN.
4. SIGNS SHALL BE ATTACHED TO THE SERVICE EQUIPMENT WITH POP-RIVETS OR SCREWS.

CLIENT:
GEOFFREY STODDARD
600 WARREN ROAD, ERWIN, NC 28339
AHJ: COUNTY OF HARNETT
UTILITY: DUKE ENERGY
METER: 329 524 333
APN: 060597 0201
PHONE: (910) 389-0043
EMAIL: GEOFFREYSTODDARD@GMAIL.COM

SYSTEM:
SYSTEM SIZE (DC): 62 X 385 = 23.870 kW
SYSTEM SIZE (AC): 17.600 kW @ 240V
MODULES: 62 X JINKO SOLAR: JKM385M-6RL3-B
OPTIMIZERS: 62 X SOLAREDGE S440
INVERTER 1: SOLAREDGE SE7600H-USRGM [SI1]
INVERTER 2: SOLAREDGE SE10000H-USRGM [SI1]
BATTERY: 4 X TESLA: POWERWALL 2

	REVISIONS	
NO.	REVISED BY	DATE
1	J.R.L.	6/3/2024
-	-	-
-	-	-

FREEDOM FOREVER LLC
415 INDUSTRIAL CT., GREER, SC 29651
Tel: (800) 385-1075

GREG ALBRIGHT

CONTRACTOR LICENSE:
ELECTRICAL CONTRACTOR U.34043

SITE PLACARD

JOB NO:	DATE:	DESIGNED BY:	SHEET:
397697	6/7/2024	J.R.L.	PV-7A

SOLAREDGE OPTIMIZER CHART

	1-10	11-20	21-30	31-40	41-50	51-60
1						
2						
3						
4						
5						
6						
7						
8						
9						
10						

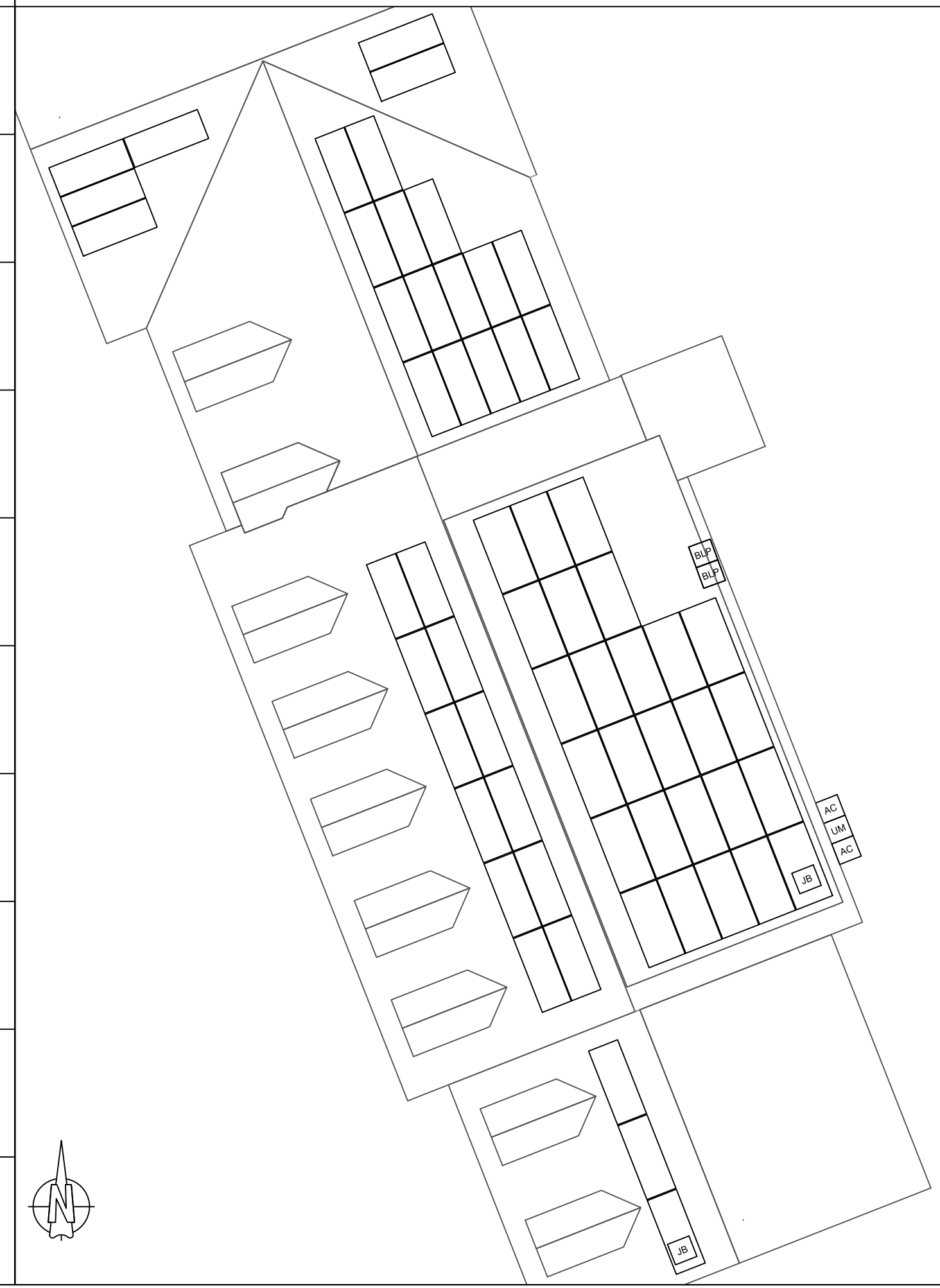

CLIENT:
GEOFFREY STODDARD
600 WARREN ROAD, ERWIN, NC 28339
AHJ: COUNTY OF HARNETT
UTILITY: DUKE ENERGY
METER: 329 524 333
APN: 060597 0201
PHONE: (910) 389-0043
EMAIL: GEOFFREYSTODDARD@GMAIL.COM

SYSTEM:
SYSTEM SIZE (DC): 62 X 385 = 23.870 kW
SYSTEM SIZE (AC): 17.600 kW @ 240V
MODULES: 62 X JINKO SOLAR:
JKM385M-6RL3-B
OPTIMIZERS: 62 X SOLAREDGE S440
INVERTER 1: SOLAREDGE SE7600H-USRGM [SI1]
INVERTER 2: SOLAREDGE SE10000H-USRGM [SI1]
BATTERY: 4 X TESLA: POWERWALL 2

	REVISIONS	
NO.	REVISED BY	DATE
1	J.R.L.	6/3/2024
-	-	-
-	-	-

freedom FOREVER

FREEDOM FOREVER LLC
415 INDUSTRIAL CT., GREER, SC 29651
Tel: (800) 385-1075

GREG ALBRIGHT

CONTRACTOR LICENSE:
ELECTRICAL CONTRACTOR U.34043

OPTIMIZER CHART

JOB NO:	DATE:	DESIGNED BY:	SHEET:
397697	6/7/2024	J.R.L.	PV-8

SAFETY PLAN

INSTRUCTIONS:

1. USE SYMBOLS IN KEY TO MARK UP THIS SHEET.
2. SAFETY PLAN MUST BE MARKED BEFORE JOB STARTS AS PART OF THE PRE-PLAN
3. DOCUMENT ALL ADDITIONAL HAZARDS ON THIS PAGE & MAKE NOTES ON THE JHA SHEET

INCIDENT REPORTING:

INJURIES - CALL INJURY HOTLINE

(855) 400-7233

**If injury is life threatening, call 911 first THEN the Injury Hotline*

NON-INJURIES - USE MOBILE INCIDENT REPORTING
(Auto, Property Damage, Near Miss)

NEAREST OCCUPATIONAL/INDUSTRIAL CLINIC:

NAME: _____

ADDRESS: _____

NEAREST HOSPITAL:

NAME: _____

ADDRESS: _____

SAFETY COACH CONTACT INFORMATION:

NAME: _____

PHONE NUMBER: _____

ALL EMPLOYEES ON SITE SHALL BE MADE AWARE OF THE SAFETY PLAN AND SIGN INDICATING THAT THEY ARE AWARE OF THE HAZARDS ON-SITE AND THE PLAN FOR WORKING SAFELY.

NAME	SIGNATURE

DATE: _____ TIME: _____

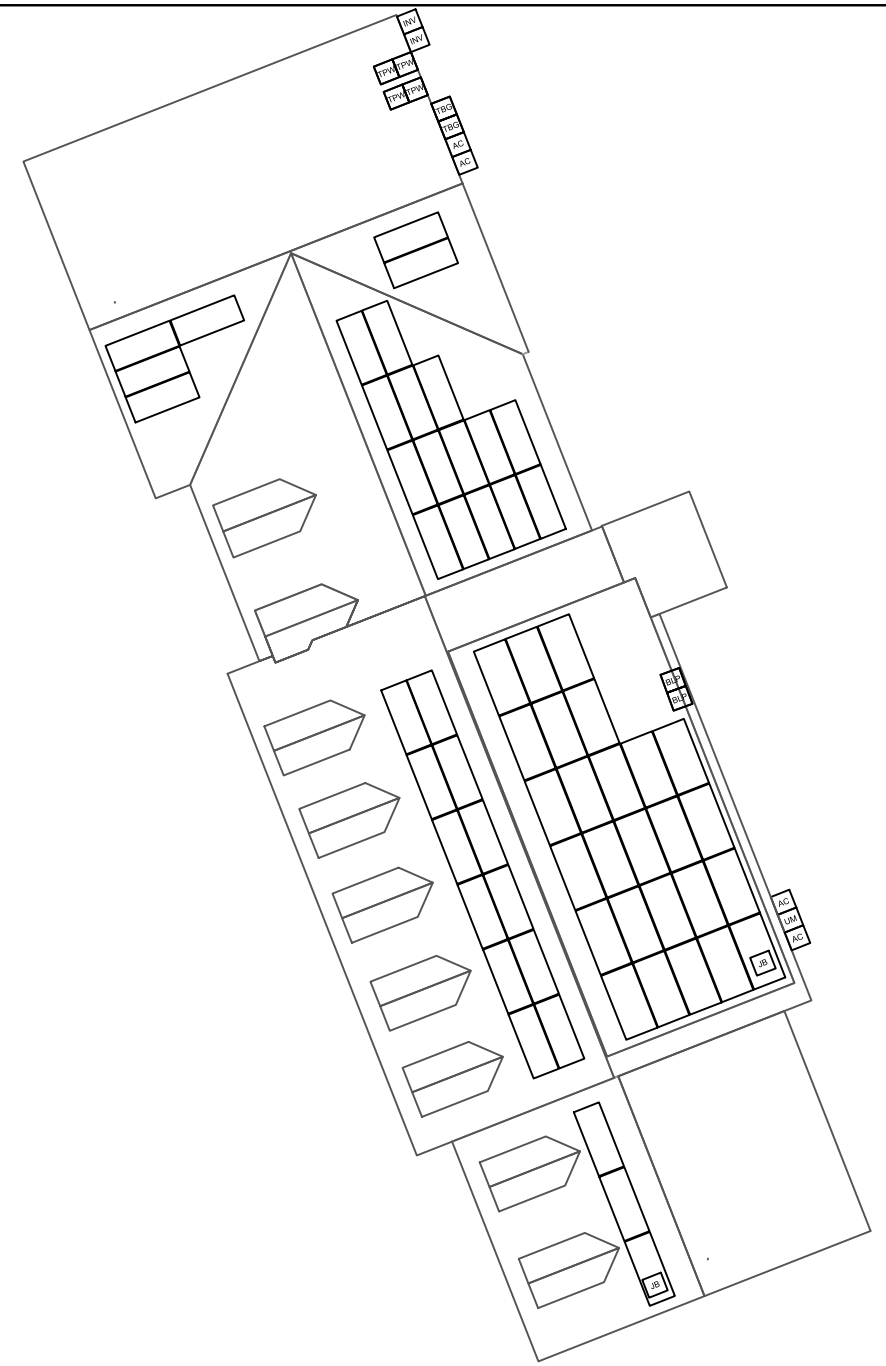

MARK UP KEY

- (P) PERMANENT ANCHOR
- (T) TEMPORARY ANCHOR
- [IL] INSTALLER LADDER
- [B] JUNCTION / COMBINER BOX
- [S] STUB-OUT
- [X] SKYLIGHT
- NO LADDER ACCESS (STEEP GRADE OR GROUND LEVEL OBSTRUCTIONS)
- RESTRICTED ACCESS
- CONDUIT
- (GAS) GAS SHUT OFF
- (H_2O) WATER SHUT OFF
- (7) SERVICE DROP
- (Z) POWER LINES

POLICIES

INSTRUCTIONS:

1. SCAN QR LINK BELOW TO ACCESS ALL FREEDOM FOREVER SAFETY POLICIES AND PROGRAMS.

CLIENT:
GEOFFREY STODDARD
600 WARREN ROAD, ERWIN, NC 28339
AHJ: COUNTY OF HARNETT
UTILITY: DUKE ENERGY
METER: 329 524 333
APN: 060597 0201
PHONE: (910) 389-0043
EMAIL: GEOFFREYSTODDARD@GMAIL.COM

SYSTEM:
SYSTEM SIZE (DC): 62 X 385 = 23.870 kW
SYSTEM SIZE (AC): 17.600 kW @ 240V
MODULES: 62 X JINKO SOLAR:
JKM385M-6RL3-B
OPTIMIZERS: 62 X SOLAREDGE S440
INVERTER 1: SOLAREDGE SE7600H-USRGM [SI1]
INVERTER 2: SOLAREDGE SE10000H-USRGM [SI1]
BATTERY: 4 X TESLA: POWERWALL 2

	REVISIONS	
NO.	REVISED BY	DATE
1	J.R.L.	6/3/2024
-	-	-
-	-	-

freedom FOREVER

FREEDOM FOREVER LLC
415 INDUSTRIAL CT., GREER, SC 29651
Tel: (800) 385-1075

GREG ALBRIGHT

CONTRACTOR LICENSE:
ELECTRICAL CONTRACTOR U.34043

BREAK AND WATER LOG

THIS LOG IS TO BE FILLED OUT ANY TIME THE TEMP EXCEEDS **90** DEGREES. THE CREW LEAD AND ROOF LEAD ARE RESPONSIBLE FOR ENSURING THIS IS COMPLETED AND UPLOADED AT THE END OF EVERYDAY WHEN TEMPS EXCEED **90** DEGREES

NAME	0800HRS	0900HRS	1000HRS	1100HRS	1200HRS	1300HRS	1400HRS	1500HRS	1600HRS

SAFETY PLAN

JOB NO:	DATE:	DESIGNED BY:	SHEET:
397697	6/7/2024	J.R.L.	PV-9

JOB HAZARD ANALYSIS

Crew leader to fill out all sections below, hold a pre-job safety meeting with all personnel, and upload this completed document and the Safety Plan to Site Capture

Ladder Access

- Ladders must be inspected before each use.
- Extension ladders must be set up on a firm and level surface at a 4-to-1 rise to run angle (or 75 degrees) and the top must be secured to the structure. Extension style ladders placed on uneven, loose or slippery surfaces must additionally have the base firmly anchored or lashed so the base will not slip out.
- Extension ladders must be used with walk-through devices or the ladder must extend 36" above the stepping off point.
- A-frame ladders must only be climbed with the ladder spreader bars locked in the open position; A-frame ladders shall not be climbed while in the closed position (ex, closed and used while leaned against a structure).
- Additional notes:

Mobile Equipment

- Only Qualified operators will operate equipment; operators must maintain a certification on their person for the equipment being operated.
- Type(s) of mobile equipment (Type/Make/Model):
- Qualified operator(s):

Material Handling and Storage

- Materials will be staged/stored in a way that does not present a hazard to client, personnel or public. Materials stored on the roof will be physically protect from failing or sliding off.

Fall Protection

- A site-specific plan for fall prevention and protection is required prior to starting work and must remain onsite at all times until work is complete; a fall rescue plan must be outlined and discussed among the crew prior to work start.
- First-person-Up (FPU) must install their anchor and connect before any other task, including installing other anchors. The Last-Person-Down (LPD) must be the only person on a roof uninstalling fall protection.
- FPCP (name and title):
- FPU and LPD (name and title):

Electrical Safety

- The Electrical Qualified Person (EQP) is required onsite to perform electrical work.
- All electrical work will be performed with equipment in an electrically safe condition (de-energized) unless approval has been granted prior to work.
- Service drops and overhead electrical hazards will be indentified and protected from contact, as neccessary.
- EQP (name and tile):

Public Protection

- The safety of the Client and Public must be maintained at all times.
- The Client and the Public shall be prevented from entering the work zone through the use of barriers and/or signage, as required.
- Company, Client and Public property shall be protected from falling objects.
- Pets (including dogs) shall be secured by their owners prior to work start.
- The Client should not leave pets, family members, or others in charge or care of Employees, Contractors, or Temporary Workers.
- Crew leader responsible for communication with the client:
- Client and public is excluded from work area by barricades (N/A, Yes, No):

Training and Pre-Job Safety Briefing

- All employees onsite shall be made aware of the specific hazards of this project and review this HJA during a pre-job briefing, and their signature indicates awareness of site conditions and the plan to eliminate any hazards identified prior to and during the project.

- Crew leader (name/title):
- Crew member (name/title):
- Crew member (name/title):
- Crew member (name/title):
- Crew member (name/title):
- Crew member (name/title):

Airborne Contaminants:

- Asbestos-containing (Transite) piping (ACP) - Do not disturb (move, drill, cut fracture, etc.)
- Asbestos-containing thermal insulation (ACI) and Asbestos-containing duct wrapping (ACW) - do not disturb, no attic or crawlspace access is allowed if work to be performed could cause exposure to personnel, client or public.

- If yes, list specific tasks and protection in place:

Weather and Environment

- The site supervisor shall forecast the weather conditions at the job site, prior to crew arrival, in order to mitigate any hazards associated with inclement weather (heat, cold, wind, rain, etc.)
- The site supervisor will utilized a portable wind meter (anemometer) to verify actual onsite wind conditions, by checking at the ground and on any elevated work surface (ex, rooftop) prior to work start, at midday and prior to solar panel staging on a roof.
- Elevated work involving the moving or maneuvering of solar panels shall cease at 25mph (sustained wind) until wind subsides.
- Forecasted weather maximum temp (degrees f):

Heat Related Illness Prevention

- Employees shall have access to potable drinking water that is fresh, pure, and suitably cool. The water shall be located as close as practicable to the areas where employees are working. Water shall be supplied in sufficient quantity at the beginning of the work shift to provide at least one quart per employee per hour for drinking for the entire shift. Employees may begin the shift with smaller quantities of water if they identify the location and have effective means for replenishment during the shift to allow employees to drink on quart or more per hour. The frequent drinking of water shall be encouraged.
- Shade shall be present when temperature exceeds 80 degrees Fahrenheit. When the outdoor temperature in the work exceeds 80 degrees Fahrenheit, employees shall have and maintain one or more areas with shade at all times.
- New employees must be acclimatized. New employees will be monitored by their Crew Leader (site supervisor) for the first two (2) weeks of employment or longer when necessary.
- Employees will be allowed and encouraged to implement scheduled breaks during each shift. Employees must take cool-down breaks in the shade any time they feel the need to do so to protect them from overheating. Supervisors are REQUIRED to allow employees any break period they need during high heat conditions.
- Cool Vests are encouraged for all employees at all times during periods of high heat.
- Identify the location of the closet Occupational/Industrial Clinic or Hospital in case a crew member becomes ill.

What is the specific plan to provide and replenish sufficient water for all employees on site?

- If offsite replenish is necessary, where will you go to replenish water (location/address):
- Who will replenish the drinking water (name):

Restroom facilities

- Employees shall have access to restroom facilities with hand-washing stations. Use of onsite restroom is at the client's discretion (location is annotated below). If client does not give permission, location of suitable restroom facilities with hand-washing stations offsite will be provided. The onsite supervisor will identify location and make arrangements to ensure all employees have access at any point.
- Restroom facilities will be (circle one): Onsite - Offsite
- If Offsite, add location name and address:

Incident Reporting Procedure

- Contact your Site Supervisor
  - Name:
  - Phone:
- Contact your Manager
  - Name:
  - Phone:
- Contact your Site Supervisor
  - Name:
  - Phone:

With: Your full name, phone number, office location, brief description of what happen and when.

NOTE ADDITIONAL HAZARDS NOT ADDRESSED ABOVE

(add as many as necessary by using additional sheets)

Define the Hazard:	Method/steps to prevent incident:
Define the Hazard:	Method/steps to prevent incident:
Define the Hazard:	Method/steps to prevent incident:
Define the Hazard:	Method/steps to prevent incident:

CLIENT:
GEOFFREY STODDARD
600 WARREN ROAD, ERWIN, NC 28339
AHJ: COUNTY OF HARNETT
UTILITY: DUKE ENERGY
METER: 329 524 333
APN: 060597 0201
PHONE: (910) 389-0043
EMAIL: GEOFFREYSTODDARD@GMAIL.COM

SYSTEM:
SYSTEM SIZE (DC): 62 X 385 = 23.870 kW
SYSTEM SIZE (AC): 17.600 kW @ 240V
MODULES: 62 X JINKO SOLAR: JKM385M-6RL3-B
OPTIMIZERS: 62 X SOLAREDGE S440
INVERTER 1: SOLAREDGE SE7600H-USRGM [SI1]
INVERTER 2: SOLAREDGE SE10000H-USRGM [SI1]
BATTERY: 4 X TESLA: POWERWALL 2

REVISIONS		
NO.	REVISED BY	DATE
1	J.R.L.	6/3/2024
-	-	-
-	-	-

freedom FOREVER

FREEDOM FOREVER LLC
415 INDUSTRIAL CT., GREER, SC 29651
Tel: (800) 385-1075

GREG ALBRIGHT

CONTRACTOR LICENSE:
ELECTRICAL CONTRACTOR U.34043

SAFETY PLAN

JOB NO:	DATE:	DESIGNED BY:	SHEET:
397697	6/7/2024	J.R.L.	PV-10

FOR INSTALLATION REFERENCE ONLY

SCAN QR CODE TO ACCESS REFERENCE LINK

FREEDOM REFERENCES

INSTALL HOTLINE

PV INSTALLATION REFERENCES

ENPHASE

SOLAREDGE

TESLA

BATTERY INSTALLATION REFERENCES

Enphase Storage Systems

SOLAREDGE Storage Systems

TESLA Storage Systems

NON-BACKUP Battery Systems

Misc. Quick Guide

V1.4

EAGLE
MODULES

THE MOST DEPENDABLE
SOLAR PRODUCT

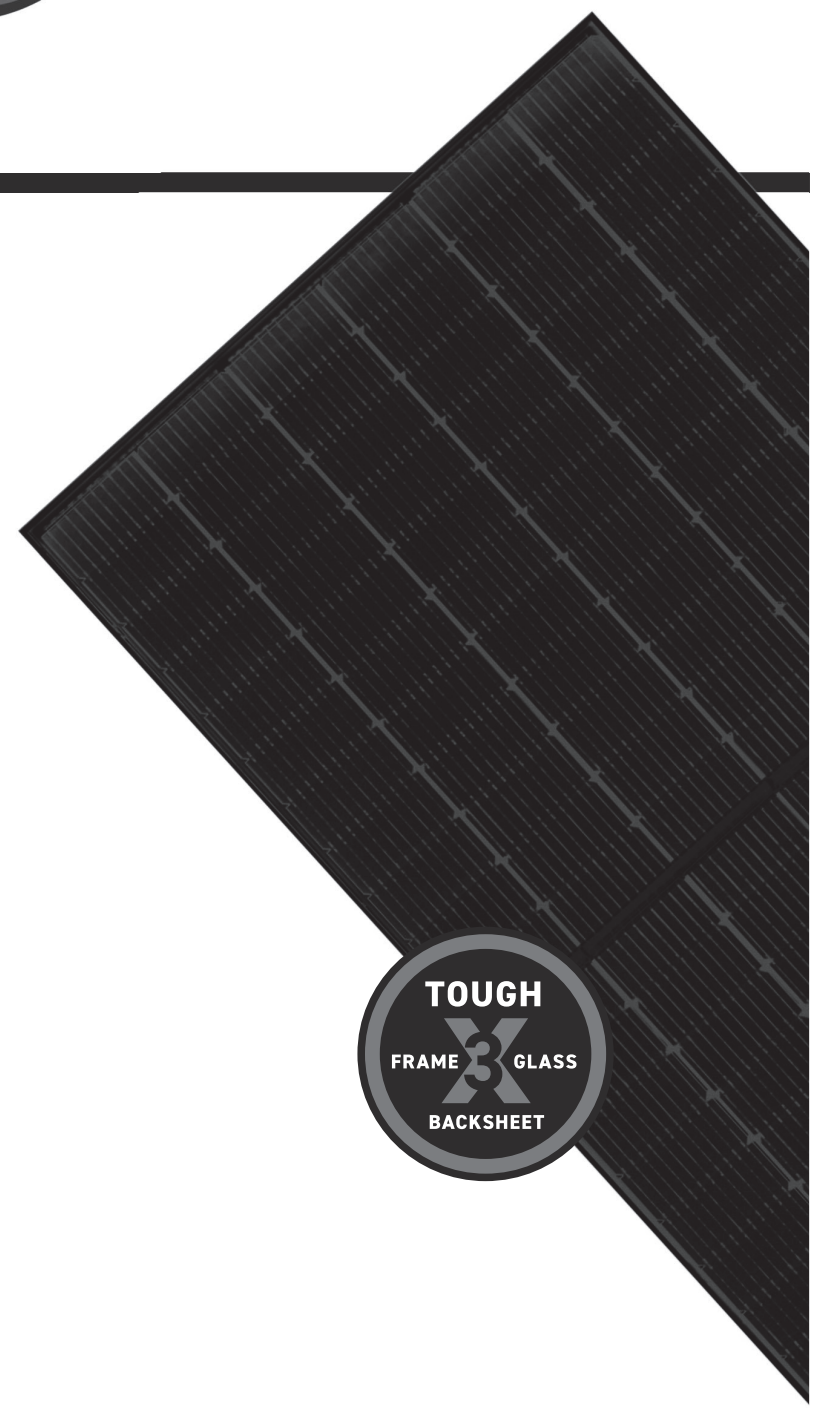

EAGLE 66TR G4

380–400 WATT
TILING RIBBON MODULE

Positive power tolerance of 0~+3%

- NYSE-listed since 2010, Bloomberg Tier 1 manufacturer
- Top performance in the strictest 3rd party labs
- Premium solar factories in USA, Vietnam, and Malaysia

KEY FEATURES

TR Technology
Tiling Ribbon eliminates cell gaps to increase module efficiency and power.

9BB Half Cell Technology
Uniquely designed 9 busbar half cut solar cells deliver ultra-high power in a small footprint.

Shade Tolerant
Twin array design allows continued performance even with shading by trees or debris.

Thick and Tough
Fire Type 1 rated module engineered with a thick frame, 3.2mm front side glass, and thick backsheet for added durability.

Leading Warranty
25-year product and 25-year linear power warranty; 98% guaranteed first year, max 0.55% annual loss.

ENGINEERING DRAWINGS

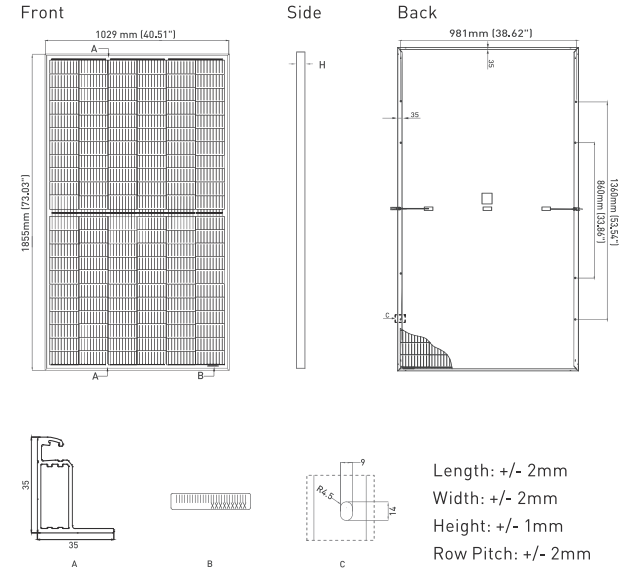

ELECTRICAL PERFORMANCE & TEMPERATURE DEPENDENCE

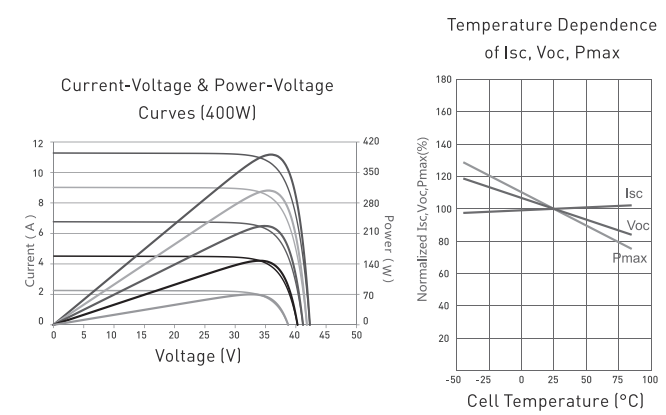

MECHANICAL CHARACTERISTICS

No. of Cells	132 (2x66)
Dimensions	1855x1029x35mm (73.03×40.51×1.37 in)
Weight	21.5 kg (47.40 lbs)
Front Glass	3.2mm, Anti-Reflection Coating High Transmission, Low Iron, Tempered Glass
Frame	Anodized Aluminum Alloy
Junction Box	IP67 Rated
Output Cables	12 AWG, 2053mm (80.83in) or Customized Length
Connector	Staubli MC4
Fire Type	Type 1
Pressure Rating	5400Pa (Snow) & 2400Pa (Wind)

TEMPERATURE CHARACTERISTICS

Temperature Coefficients of Pmax	-0.35%/°C
Temperature Coefficients of Voc	-0.28%/°C
Temperature Coefficients of Isc	0.048%/°C
Nominal Operating Cell Temperature (NOCT)	45 ± 2°C

MAXIMUM RATINGS

Operating Temperature (°C)	-40°C~+85°C
Maximum System Voltage	1000VDC
Maximum Series Fuse Rating	20A

PACKAGING CONFIGURATION

2 pallets = 1 stack; 30pcs/pallets, 60pcs/stack, 720pcs/ 40'HQ Container

- ISO9001:2008 Quality Standards
- ISO14001:2004 Environmental Standards
- IEC61215, IEC61730 certified products
- UL61730 Certification
- ISO45001:2018 Occupational Health & Safety Standards

ELECTRICAL CHARACTERISTICS

Module Type	JKM380M-6RL3-B		JKM385M-6RL3-B		JKM390M-6RL3-B		JKM395M-6RL3-B		JKM400M-6RL3-B	
	STC	NOCT	STC	NOCT	STC	NOCT	STC	NOCT	STC	NOCT
Maximum Power (Pmax)	380Wp	283Wp	385Wp	286Wp	390Wp	290Wp	395Wp	294Wp	400Wp	298Wp
Maximum Power Voltage (Vmp)	36.90V	33.70V	37.02V	33.90V	37.15V	34.02V	37.27V	34.13V	37.39V	34.25V
Maximum Power Current (Imp)	10.30A	8.39A	10.40A	8.45A	10.50A	8.53A	10.60A	8.61A	10.70A	8.69A
Open-circuit Voltage (Voc)	44.22V	41.74V	44.34V	41.85V	44.47V	41.97V	44.59V	42.09V	44.71V	42.20V
Short-circuit Current (Isc)	11.12A	8.98A	11.22A	9.06A	11.32A	9.14A	11.42A	9.22A	11.52A	9.30A
Module Efficiency STC (%)	19.91%		20.17%		20.43%		20.69%		20.96%	

***STC:** Irradiance 1000W/m² | Cell Temperature 25°C | AM = 1.5
NOCT: Irradiance 800W/m² | Ambient Temperature 20°C | AM = 1.5 | Wind Speed 1m/s

*Power measurement tolerance: +/- 3%

The company reserves the final right for explanation on any of the information presented hereby. JKM380-400M-6RL3-B-A2-US

BUILDING YOUR TRUST IN SOLAR. WWW.JINKOSOLAR.US

SolarEdge Home Wave Inverter

For North America

SE3800H-US / SE5000H-US / SE6000H-US /
SE7600H-US / SE10000H-US / SE11400H-US

INVERTERS

12-25 YEAR WARRANTY

Optimized installation with HD-Wave technology

- Specifically designed to work with power optimizers
- Record-breaking 99% weighted efficiency
- Quick and easy inverter commissioning directly from a smartphone using SolarEdge SetApp
- Fixed voltage inverter for longer strings
- Integrated arc fault protection and rapid shutdown for NEC 2014-2023 per articles 690.11 and 690.12
- UL1741 SA certified, for CPUC Rule 21 grid compliance
- Small, lightweight, and easy to install both outdoors or indoors
- Built-in module-level monitoring
- Optional: Faster installations with built-in consumption metering (1% accuracy) and production revenue grade metering (0.5% accuracy, ANSI C12.20)

solaredge.com

solaredge

/ SolarEdge Home Wave Inverter

For North America

SE3800H-US / SE5000H-US / SE6000H-US/
SE7600H-US / SE10000H-US / SE11400H-US

Applicable to inverters with part number	SEXXXXH-XXXXXBXX4					SE11400H-XXXXXBXX5	
	SE3800H-US	SE5000H-US	SE6000H-US	SE7600H-US	SE10000H-US	SE11400H-US	Units
OUTPUT							
Rated AC Power Output	3800 @ 240V 3300 @ 208V	5000	6000 @ 240V 5000 @ 208V	7600	10000	11400 @ 240V 10000 @ 208V	VA
Maximum AC Power Output	3800 @ 240V 3300 @ 208V	5000	6000 @ 240V 5000 @ 208V	7600	10000	11400 @ 240V 10000 @ 208V	VA
AC Output Voltage Min.-Nom.-Max. (211 - 240 - 264)	✓	✓	✓	✓	✓	✓	Vac
AC Output Voltage Min.-Nom.-Max. (183 - 208 - 229)	✓	-	✓	-	-	✓	Vac
AC Frequency (Nominal)	59.3 - 60 - 60.5(1)						Hz
Maximum Continuous Output Current @240V	16	21	25	32	42	47.5	A
Maximum Continuous Output Current @208V	16	-	24	-	-	48.5	A
Power Factor	1, Adjustable - 0.85 to 0.85						
GFDI Threshold	1						A
Utility Monitoring, Islanding Protection, Country Configurable Thresholds	Yes						
INPUT							
Maximum DC Power @240V	5900	7750	9300	11800	15500	17650	W
Maximum DC Power @208V	5100	-	7750	-	-	15500	W
Transformer-less, Ungrounded	Yes						
Maximum Input Voltage	480						Vdc
Nominal DC Input Voltage	380						Vdc
Maximum Input Current @240V(2)	10.5	13.5	16.5	20	27	30.5	Adc
Maximum Input Current @208V(2)	9	-	13.5	-	-	27	Adc
Max. Input Short Circuit Current	45						Adc
Reverse-Polarity Protection	Yes						
Ground-Fault Isolation Detection	600k Sensitivity						
Maximum Inverter Efficiency	99.2						%
CEC Weighted Efficiency	99					99 @ 240V 98.5 @ 208V	%
Nighttime Power Consumption	< 2.5						W

(1) For other regional settings please contact SolarEdge support.
(2) A higher current source may be used; the inverter will limit its input current to the values stated.

/ SolarEdge Home Wave Inverter

For North America

SE3800H-US / SE5000H-US / SE6000H-US/
SE7600H-US / SE10000H-US / SE11400H-US

Applicable to inverters with part number	SEXXXXH-XXXXXBXX4					SE11400H-XXXXXBXX5	
	SE3800H-US	SE5000H-US	SE6000H-US	SE7600H-US	SE10000H-US	SE11400H-US	
ADDITIONAL FEATURES							
Supported Communication Interfaces	RS485, Ethernet, ZigBee (optional), wireless SolarEdge Home Network (optional)(3), Wi-Fi (optional), Cellular (optional)						
Revenue Grade Metering, ANSI C12.20	Optional(4)						
Consumption Metering							
Inverter Commissioning	With the SetApp mobile application using Built-in Wi-Fi Access Point for Local Connection						
Rapid Shutdown - NEC 2014-2023 per articles 690.11 and 690.12	Automatic Rapid Shutdown upon AC Grid Disconnect						
STANDARD COMPLIANCE							
Safety	UL1741, UL1741 SA, UL1741 SB, UL1699B, CSA C22.2, Canadian AFCI according to T.I.L. M-07						
Grid Connection Standards	IEEE1547-2018, Rule 21, Rule 14 (HI), CSA C22.3 No. 9						
Emissions	FCC Part 15 Class B						
INSTALLATION SPECIFICATIONS							
AC Output Conduit Size / AWG Range	1" Maximum / 14 – 6 AWG				1" Maximum / 14 – 4 AWG		
DC Input Conduit Size / # of Strings / AWG Range	1" Maximum / 1 – 2 strings / 14 – 6 AWG				1" Maximum / 1 – 3 strings / 14 – 6 AWG		
Dimensions with Safety Switch (H x W x D)	17.7 x 14.6 x 6.8 / 450 x 370 x 174				21.06 x 14.6 x 7.3 / 535 x 370 x 185	21.06 x 14.6 x 8.2 / 535 x 370 x 208(5)	in / mm
Weight with Safety Switch	22 / 10	25.1 / 11.4	26.2 / 11.9		38.8 / 17.6	44.9 / 20.4(5)	lb / kg
Noise	< 25			<50			dBA
Cooling	Natural Convection						
Operating Temperature Range	-40 to +140 / -40 to +60(6)						˚F / ˚C
Protection Rating	NEMA 4X (Inverter with Safety Switch)						

(3) For more information, refer to the SolarEdge Home Network datasheet
(4) Inverter with Revenue Grade Production and Consumption Meter P/N: SExxxxH-US000BEI4. For consumption metering, current transformers should be ordered separately: SEACT0750-200NA-20 or SEACT0750-400NA-20. 20 units per box.
(5) SE11400H-USxxxBxx**5** is the updated PN, though SE11400H-USxxxBxx**4** will still be available. All specifications are similar for both models, **EXCLUDING** the weight and dimensions [HxWxD]; The weight and dimensions of SE11400H-USxxxBxx**4** are 17.6 [kg] and 21.06-14.6-7.3 / 535-370-185 [in/mm], accordingly.
(6) Full power up to at least 50˚C / 122˚F; for power de-rating information refer to the Temperature De-rating Technical Note for North America.

How to Enable Consumption Monitoring

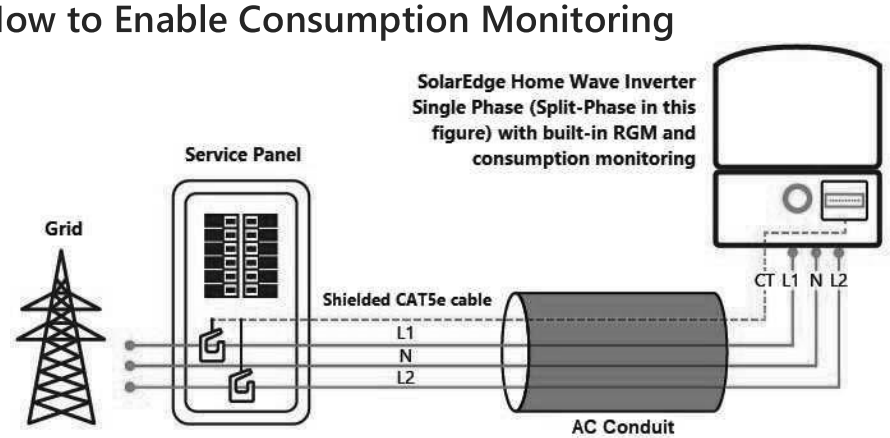

By simply wiring current transformers through the inverter's existing AC conduits and connecting them to the service panel, homeowners will gain full insight into their household energy usage helping them to avoid high electricity bills.

CE

SolarEdge Home Wave Inverter

For North America

SE3800H-US / SE5000H-US / SE6000H-US /
SE7600H-US / SE10000H-US / SE11400H-US

INVERTERS

12-25 YEAR WARRANTY

Optimized installation with HD-Wave technology

- Specifically designed to work with power optimizers
- Record-breaking 99% weighted efficiency
- Quick and easy inverter commissioning directly from a smartphone using SolarEdge SetApp
- Fixed voltage inverter for longer strings
- Integrated arc fault protection and rapid shutdown for NEC 2014-2023 per articles 690.11 and 690.12
- UL1741 SA certified, for CPUC Rule 21 grid compliance
- Small, lightweight, and easy to install both outdoors or indoors
- Built-in module-level monitoring
- Optional: Faster installations with built-in consumption metering (1% accuracy) and production revenue grade metering (0.5% accuracy, ANSI C12.20)

solaredge.com

solaredge

/ SolarEdge Home Wave Inverter

For North America

SE3800H-US / SE5000H-US / SE6000H-US/
SE7600H-US / SE10000H-US / SE11400H-US

Applicable to inverters with part number	SEXXXXH-XXXXXBXX4					SE11400H-XXXXXBXX5	
	SE3800H-US	SE5000H-US	SE6000H-US	SE7600H-US	SE10000H-US	SE11400H-US	Units
OUTPUT							
Rated AC Power Output	3800 @ 240V 3300 @ 208V	5000	6000 @ 240V 5000 @ 208V	7600	10000	11400 @ 240V 10000 @ 208V	VA
Maximum AC Power Output	3800 @ 240V 3300 @ 208V	5000	6000 @ 240V 5000 @ 208V	7600	10000	11400 @ 240V 10000 @ 208V	VA
AC Output Voltage Min.-Nom.-Max. (211 - 240 - 264)	✓	✓	✓	✓	✓	✓	Vac
AC Output Voltage Min.-Nom.-Max. (183 - 208 - 229)	✓	-	✓	-	-	✓	Vac
AC Frequency (Nominal)	59.3 - 60 - 60.5(1)						Hz
Maximum Continuous Output Current @240V	16	21	25	32	42	47.5	A
Maximum Continuous Output Current @208V	16	-	24	-	-	48.5	A
Power Factor	1, Adjustable - 0.85 to 0.85						
GFDI Threshold	1						A
Utility Monitoring, Islanding Protection, Country Configurable Thresholds	Yes						
INPUT							
Maximum DC Power @240V	5900	7750	9300	11800	15500	17650	W
Maximum DC Power @208V	5100	-	7750	-	-	15500	W
Transformer-less, Ungrounded	Yes						
Maximum Input Voltage	480						Vdc
Nominal DC Input Voltage	380						Vdc
Maximum Input Current @240V(2)	10.5	13.5	16.5	20	27	30.5	Adc
Maximum Input Current @208V(2)	9	-	13.5	-	-	27	Adc
Max. Input Short Circuit Current	45						Adc
Reverse-Polarity Protection	Yes						
Ground-Fault Isolation Detection	600k Sensitivity						
Maximum Inverter Efficiency	99.2						%
CEC Weighted Efficiency	99					99 @ 240V 98.5 @ 208V	%
Nighttime Power Consumption	< 2.5						W

(1) For other regional settings please contact SolarEdge support.
(2) A higher current source may be used; the inverter will limit its input current to the values stated.

/ SolarEdge Home Wave Inverter

For North America

SE3800H-US / SE5000H-US / SE6000H-US/
SE7600H-US / SE10000H-US / SE11400H-US

Applicable to inverters with part number	SEXXXXH-XXXXXBXX4					SE11400H-XXXXXBXX5	
	SE3800H-US	SE5000H-US	SE6000H-US	SE7600H-US	SE10000H-US	SE11400H-US	
ADDITIONAL FEATURES							
Supported Communication Interfaces	RS485, Ethernet, ZigBee (optional), wireless SolarEdge Home Network (optional)(3), Wi-Fi (optional), Cellular (optional)						
Revenue Grade Metering, ANSI C12.20	Optional(4)						
Consumption Metering							
Inverter Commissioning	With the SetApp mobile application using Built-in Wi-Fi Access Point for Local Connection						
Rapid Shutdown - NEC 2014-2023 per articles 690.11 and 690.12	Automatic Rapid Shutdown upon AC Grid Disconnect						
STANDARD COMPLIANCE							
Safety	UL1741, UL1741 SA, UL1741 SB, UL1699B, CSA C22.2, Canadian AFCI according to T.I.L. M-07						
Grid Connection Standards	IEEE1547-2018, Rule 21, Rule 14 (HI), CSA C22.3 No. 9						
Emissions	FCC Part 15 Class B						
INSTALLATION SPECIFICATIONS							
AC Output Conduit Size / AWG Range	1" Maximum / 14 – 6 AWG				1" Maximum / 14 – 4 AWG		
DC Input Conduit Size / # of Strings / AWG Range	1" Maximum / 1 – 2 strings / 14 – 6 AWG				1" Maximum / 1 – 3 strings / 14 – 6 AWG		
Dimensions with Safety Switch (H x W x D)	17.7 x 14.6 x 6.8 / 450 x 370 x 174				21.06 x 14.6 x 7.3 / 535 x 370 x 185	21.06 x 14.6 x 8.2 / 535 x 370 x 208(5)	in / mm
Weight with Safety Switch	22 / 10	25.1 / 11.4	26.2 / 11.9		38.8 / 17.6	44.9 / 20.4(5)	lb / kg
Noise	< 25			<50			dBA
Cooling	Natural Convection						
Operating Temperature Range	-40 to +140 / -40 to +60(6)						˚F / ˚C
Protection Rating	NEMA 4X (Inverter with Safety Switch)						

(3) For more information, refer to the SolarEdge Home Network datasheet
(4) Inverter with Revenue Grade Production and Consumption Meter P/N: SExxxxH-US000BEI4. For consumption metering, current transformers should be ordered separately: SEACT0750-200NA-20 or SEACT0750-400NA-20. 20 units per box.
(5) SE11400H-USxxxBxx**5** is the updated PN, though SE11400H-USxxxBxx**4** will still be available. All specifications are similar for both models, **EXCLUDING** the weight and dimensions [HxWxD]; The weight and dimensions of SE11400H-USxxxBxx**4** are 17.6 [kg] and 21.06-14.6-7.3 / 535-370-185 [in/mm], accordingly.
(6) Full power up to at least 50˚C / 122˚F; for power de-rating information refer to the Temperature De-rating Technical Note for North America.

How to Enable Consumption Monitoring

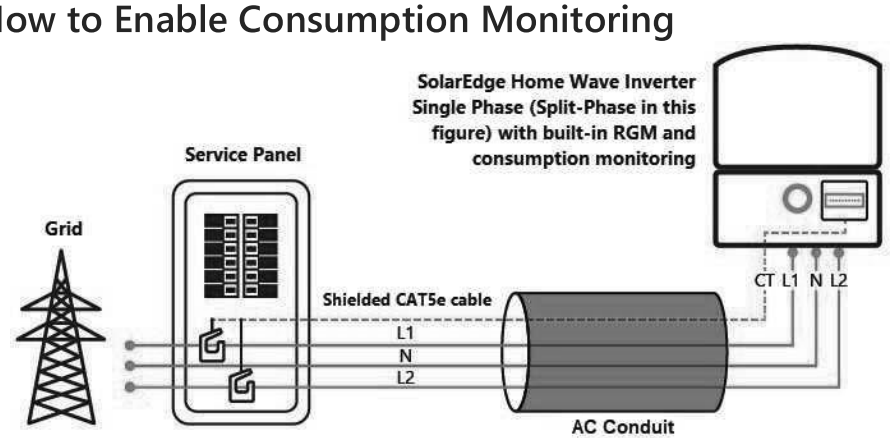

By simply wiring current transformers through the inverter's existing AC conduits and connecting them to the service panel, homeowners will gain full insight into their household energy usage helping them to avoid high electricity bills.

CE

Power Optimizer

For North America

S440, S500

POWER OPTIMIZER

PV power optimization at the module level

- Specifically designed to work with SolarEdge residential inverters
- Detects abnormal PV connector behavior, preventing potential safety issues*
- Module-level voltage shutdown for installer and firefighter safety
- Superior efficiency (99.5%)
- Mitigates all types of module mismatch loss, from manufacturing tolerance to partial shading
- Faster installations with simplified cable management and easy assembly using a single bolt
- Flexible system design for maximum space utilization
- Compatible with bifacial PV modules
- Meets NEC requirements for arc fault protection (AFCI) and Photovoltaic Rapid Shutdown System (PVRSS)

* Expected availability in 2022

solaredge.com

solaredge

/ Power Optimizer

For North America

S440, S500

	S440	S500	Unit
INPUT			
Rated Input DC Power(1)	440	500	W
Absolute Maximum Input Voltage (Voc)	60		Vdc
MPPT Operating Range	8 - 60		Vdc
Maximum Short Circuit Current (Isc) of Connected PV Module	14.5	15	Adc
Maximum Efficiency	99.5		%
Weighted Efficiency	98.6		%
Overvoltage Category	II		
OUTPUT DURING OPERATION			
Maximum Output Current	15		Adc
Maximum Output Voltage	60		Vdc
OUTPUT DURING STANDBY (POWER OPTIMIZER DISCONNECTED FROM INVERTER OR INVERTER OFF)			
Safety Output Voltage per Power Optimizer	1+/-0.1		Vdc
STANDARD COMPLIANCE			
Photovoltaic Rapid Shutdown System	NEC 2014, 2017 & 2020		
EMC	FCC Part 15 Class B, IEC61000-6-2, IEC61000-6-3		
Safety	IEC62109-1 (class II safety), UL1741		
Material	UL94 V-0, UV Resistant		
RoHS	Yes		
Fire Safety	VDE-AR-E 2100-712:2013-05		
INSTALLATION SPECIFICATIONS			
Maximum Allowed System Voltage	1000		Vdc
Dimensions (W x L x H)	129 x 153 x 30 / 5.07 x 6.02 x 1.18		mm / in
Weight (including cables)	655 / 1.5		gr / lb
Input Connector	MC4(2)		
Input Wire Length	0.1 / 0.32		m / ft
Output Connector	MC4		
Output Wire Length	(+) 2.3, (-) 0.10 / (+) 7.54, (-) 0.32		m / ft
Operating Temperature Range(3)	-40 to +85		˚C
Protection Rating	IP68 / Type6B		
Relative Humidity	0 - 100		%

(1) Rated power of the module at STC will not exceed the power optimizer Rated Input DC Power. Modules with up to +5% power tolerance are allowed
(2) For other connector types please contact SolarEdge
(3) For ambient temperature above +70°C / +158°F power de-rating is applied. Refer to Power Optimizers Temperature De-Rating Technical Note for more details

PV System Design Using a SolarEdge Inverter		Single Phase HD-Wave	Three Phase for 208V grid	Three Phase for 277/480V grid	
Minimum String Length (Power Optimizers)	S440, S500	8	14	18	
Maximum String Length (Power Optimizers)		25		50(4)	
Maximum Nominal Power per String		5700 (6000 with SE7600-US-SE11400-U)	6000	12750	W
Maximum Allowed Connected Power per String (5) (Permitted only when the difference in connected power between strings is 1,000W or less)		Refer to Footnote 5	One String 7200W Two strings or more 7800W	15,000W	
Parallel Strings of Different Lengths or Orientations		Y			

(4) A string with more than 30 optimizers does not meet NEC rapid shutdown requirements; safety voltage will be above the 30V requirement
(5) If the inverters rated AC power ≤ maximum nominal power per string, then the maximum power per string will be able to reach up to the inverters maximum input DC power. Refer to: https://www.solaredge.com/sites/default/files/se-power-optimizer-single-string-design-application-note.pdf
(6) It is not allowed to mix S-series and P-series Power Optimizers in new installations

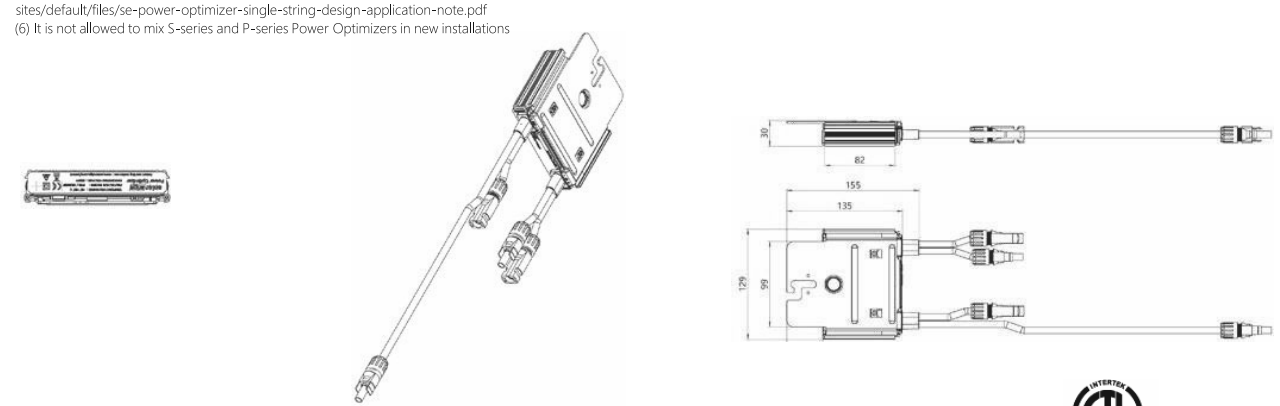

Intertek RoHS

Product specifications

Eaton DG223NRB

Catalog Number: DG223NRB

Eaton General duty cartridge fuse safety switch, 100 A, NEMA 3R, Painted galvanized steel, Class H fuses, Fusible with neutral, Two-pole, Three-wire, Category: general duty safety switch, 240 V

General specifications

Product Name Eaton general duty cartridge fuse safety switch	Catalog Number DG223NRB
	UPC 782113144252
Product Length/Depth 7.38 in	Product Height 19.25 in
Product Width 9.13 in	Product Weight 14 lb
Warranty Eaton Selling Policy 25-000, one (1) year from the date of installation of the Product or eighteen (18) months from the date of shipment of the Product, whichever occurs first.	Certifications UL Listed
	Catalog Notes Maximum hp ratings apply only when dual element fuses are used. 3-Phase hp rating shown is a grounded B phase rating, UL listed.

Physical Attributes

Enclosure
NEMA 3R

Enclosure material
Painted galvanized steel

Fuse configuration
Fusible with neutral

Number Of Poles
Two-pole

Number of wires
3

Type
General duty, cartridge fused

Performance Ratings

Amperage Rating
100A

Fuse class provision
Class H fuses

Voltage rating
240V

Miscellaneous

Product Category
General duty safety switch

Resources

Catalogs
Eaton's Volume 2—Commercial Distribution

Multimedia
Double Up on Safety
Switching Devices Flex Center

Specifications and datasheets
Eaton Specification Sheet - DG223NRB

Eaton Corporation plc
Eaton House
30 Pembroke Road
Dublin 4, Ireland
Eaton.com

Eaton.com/socialmedia

Product specifications

Eaton DG224NRK

Catalog Number: DG224NRK

Eaton General duty cartridge fuse safety switch, 200 A, NEMA 3R, Painted galvanized steel, Class H fuses, Fusible with neutral, Two-pole, Three-wire, Category: general duty safety switch, 240 V

General specifications

Product Name Eaton general duty cartridge fuse safety switch	Catalog Number DG224NRK
	UPC 782113213507
Product Length/Depth 11.25 in	Product Height 25.5 in
Product Width 16 in	Product Weight 55 lb
Warranty Eaton Selling Policy 25-000, one (1) year from the date of installation of the Product or eighteen (18) months from the date of shipment of the Product, whichever occurs first.	Certifications UL Listed
	Catalog Notes Maximum hp ratings apply only when dual element fuses are used. 3-Phase hp rating shown is a grounded B phase rating, UL listed.

Physical Attributes

Enclosure
NEMA 3R

Enclosure material
Painted galvanized steel

Fuse configuration
Fusible with neutral

Number Of Poles
Two-pole

Number of wires
3

Type
General duty, cartridge fused

Performance Ratings

Amperage Rating
200A

Fuse class provision
Class H fuses

Voltage rating
240V

Miscellaneous

Product Category
General duty safety switch

Resources

Catalogs
Eaton's Volume 2—Commercial Distribution

Multimedia
Double Up on Safety
Switching Devices Flex Center

Specifications and datasheets
Eaton Specification Sheet - DG224NRK

Eaton Corporation plc
Eaton House
30 Pembroke Road
Dublin 4, Ireland
Eaton.com

Eaton.com/socialmedia

POWERWALL

Tesla Powerwall is a fully-integrated AC battery system for residential or light commercial use. Its rechargeable lithium-ion battery pack provides energy storage for solar self-consumption, time-based control, and backup.

Powerwall's electrical interface provides a simple connection to any home or building. Its revolutionary compact design achieves market-leading energy density and is easy to install, enabling owners to quickly realize the benefits of reliable, clean power.

PERFORMANCE SPECIFICATIONS

AC Voltage (Nominal)	120/240 V
Feed-In Type	Split Phase
Grid Frequency	60 Hz
Total Energy	14 kWh[1]
Usable Energy	13.5 kWh[1]
Real Power, max continuous	5 kW (charge and discharge)
Real Power, peak (10s, off-grid/backup)	7 kW (charge and discharge)
Apparent Power, max continuous	5.8 kVA (charge and discharge)
Apparent Power, peak (10s, off-grid/backup)	7.2 kVA (charge and discharge)
Load Start Capability	88 - 106 A LRA[2]
Maximum Supply Fault Current	10 kA
Maximum Output Fault Current	32 A
Overcurrent Protection Device	30 A
Imbalance for Split-Phase Loads	100%
Power Factor Output Range	+/- 1.0 adjustable
Power Factor Range (full-rated power)	+/- 0.85
Internal Battery DC Voltage	50 V
Round Trip Efficiency	90%[1,3]
Warranty	10 years

[1]Values provided for 25°C (77°F), 3.3 kW charge/discharge power.
[2]Load start capability may vary.
[3]AC to battery to AC, at beginning of life.

COMPLIANCE INFORMATION

Certifications	UL 1642, UL 1741, UL 1741 SA, UL 1741 SB, UL 1973, UL 9540, IEEE 1547-2018, UN 38.3
Grid Connection	Worldwide Compatibility
Emissions	FCC Part 15 Class B, ICES 003
Environmental	RoHS Directive 2011/65/EU
Seismic	AC156, IEEE 693-2005 (high)
Fire Testing	Meets the unit level performance criteria of UL 9540A

MECHANICAL SPECIFICATIONS

Dimensions	1150 mm x 753 mm x 147 mm (45.3 in x 29.6 in x 5.75 in)[4]
Weight	114 kg (251.3 lbs)[4]
Mounting options	Floor or wall mount

[4]Dimensions and weight differ slightly if manufactured before March 2019. Contact Tesla for additional information.

ENVIRONMENTAL SPECIFICATIONS

Operating Temperature	-20°C to 50°C (-4°F to 122°F)[5]
Recommended Temperature	0°C to 30°C (32°F to 86°F)
Operating Humidity (RH)	Up to 100%, condensing
Storage Conditions	-20°C to 30°C (-4°F to 86°F) Up to 95% RH, non-condensing State of Energy (SoE): 25% initial
Maximum Elevation	3000 m (9843 ft)
Environment	Indoor and outdoor rated
Enclosure Type	NEMA 3R
Ingress Rating	IP67 (Battery & Power Electronics) IP56 (Wiring Compartment)
Wet Location Rating	Yes
Noise Level @ 1m	< 40 dBA at 30°C (86°F)

[5]Performance may be de-rated at operating temperatures below 10°C (50°F) or greater than 43°C (109°F).

POWERWALL
Backup Gateway 2

The Backup Gateway 2 for Tesla Powerwall provides energy management and monitoring for solar self-consumption, time-based control, and backup.

The Backup Gateway 2 controls connection to the grid, automatically detecting outages and providing a seamless transition to backup power. When equipped with a main circuit breaker, the Backup Gateway 2 can be installed at the service entrance. When the optional internal panelboard is installed, the Backup Gateway 2 can also function as a load center.

The Backup Gateway 2 communicates directly with Powerwall, allowing you to monitor energy use and manage backup energy reserves from any mobile device with the Tesla app.

PERFORMANCE SPECIFICATIONS

AC Voltage (Nominal)	120/240V
Feed-In Type	Split Phase
Grid Frequency	60 Hz
Current Rating	200 A
Maximum Input Short Circuit Current	10 kA[1]
Overcurrent Protection Device	100-200A; Service Entrance Rated[1]
Overvoltage Category	Category IV
AC Meter	Revenue accurate (+/- 0.2 %)
Primary Connectivity	Ethernet, Wi-Fi
Secondary Connectivity	Cellular (3G, LTE/4G)[2]
User Interface	Tesla App
Operating Modes	Support for solar self-consumption, time-based control, and backup
Backup Transition	Automatic disconnect for seamless backup
Modularity	Supports up to 10 AC-coupled Powerwalls
Optional Internal Panelboard	200A 6-space / 12 circuit Eaton BR Circuit Breakers
Warranty	10 years

[1] When protected by Class J fuses, Backup Gateway 2 is suitable for use in circuits capable of delivering not more than 22kA symmetrical amperes.
[2] The customer is expected to provide internet connectivity for Backup Gateway 2; cellular should not be used as the primary mode of connectivity. Cellular connectivity subject to network operator service coverage and signal strength.

MECHANICAL SPECIFICATIONS

Dimensions	660 mm x 411 mm x 149 mm (26 in x 16 in x 6 in)
Weight	20.4 kg (45 lb)
Mounting options	Wall mount, Semi-flush mount

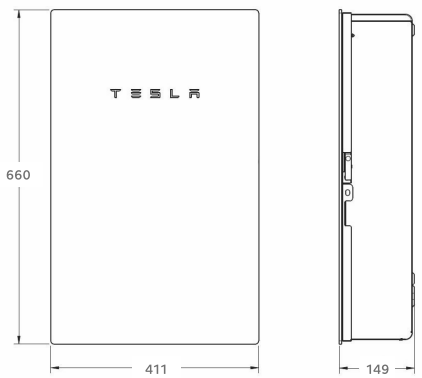

COMPLIANCE INFORMATION

Certifications	UL 67, UL 869A, UL 916, UL 1741 PCS CSA 22.2 0.19, CSA 22.2 205
Emissions	FCC Part 15, ICES 003

ENVIRONMENTAL SPECIFICATIONS

Operating Temperature	-20°C to 50°C (-4°F to 122°F)
Operating Humidity (RH)	Up to 100%, condensing
Maximum Elevation	3000 m (9843 ft)
Environment	Indoor and outdoor rated
Enclosure Type	NEMA 3R

EcoFasten®
For Installers. **By Installers.**

ROCKIT®

COMPLETE RAIL-LESS RACKING SYSTEM

The RockIt system is the industry's premier rail-less PV racking system for composition shingle, tile, and metal roofs. Designed in conjunction with the needs of installers, RockIt quickly & easily installs with a single tool. Featuring an easy-to-position alignment slide and a top-down leveling system, RockIt is logistically intelligent with no need to ship or transport long rails. Components are available in a black finish that complements both commercial and residential applications. Conforms to UL 2703.

ROOF TYPE — **Composition Shingle, Tile, Metal**

RACKING — **Rail-Less**

ATTACHMENT — **Structural-Attach Direct-Attach**

FEATURES & BENEFITS

- Patented watertight technology
- Fully integrated bonding
- Top-down leveling system
- North-South adjustability
- Single tool install
- Florida Product Approved for composition shingle roofs

WATER TIGHT TECHNOLOGY

25 YEAR WARRANTY

STREAMLINED INSTALLATION WITH MINIMAL ROOF PENETRATIONS

ECOFASTENSOLAR.COM

ROCKIT

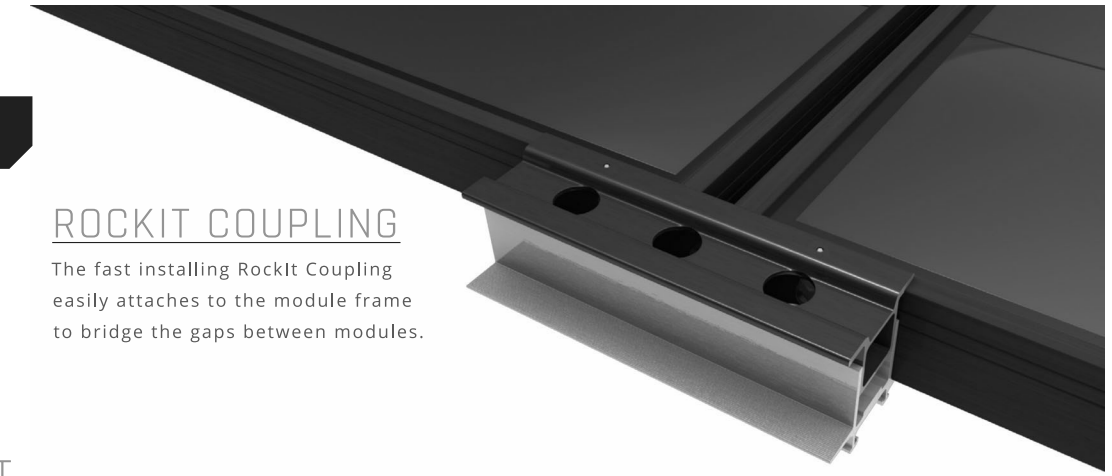

ROCKIT COUPLING

The fast installing RockIt Coupling easily attaches to the module frame to bridge the gaps between modules.

SKIRT

The sleek black Skirt installs first and acts as an alignment guide for the entire array. The Skirt End Cap does double duty as a skirt coupling device and an aesthetically-pleasing finishing touch.

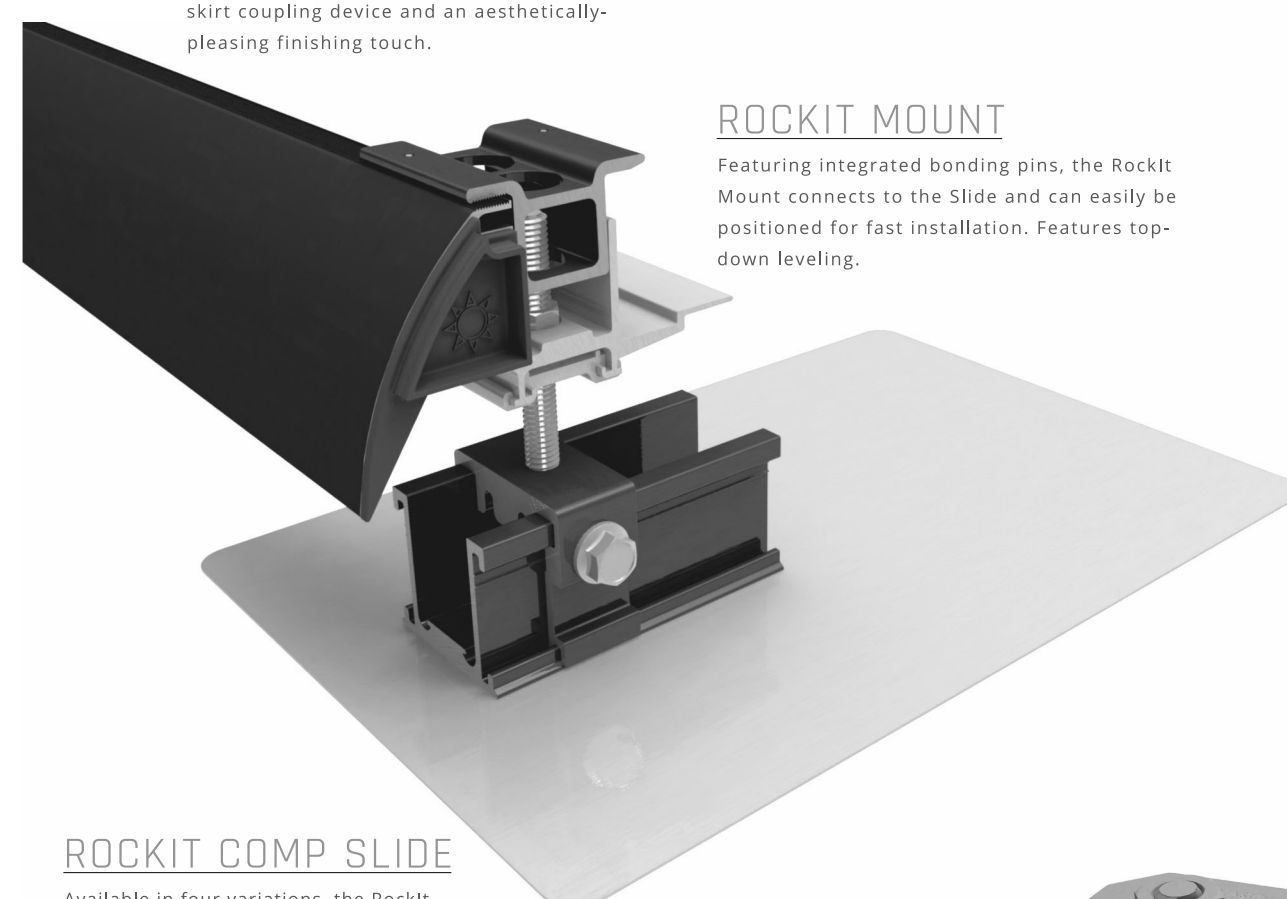

ROCKIT MOUNT

Featuring integrated bonding pins, the RockIt Mount connects to the Slide and can easily be positioned for fast installation. Features top-down leveling.

ROCKIT COMP SLIDE

Available in four variations, the RockIt Slide allows installation on composition shingle, tile, and metal roofs.

FRAME MLPE MOUNT

Attaches and fully bonds MLPE's (Module Level Power Electronics) to the module frame with a single bolt clip.

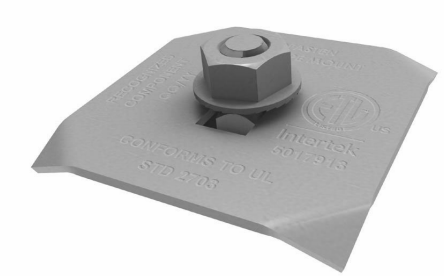

RI COMP SLIDE AL BLK

PART NUMBER	DESCRIPTION
2011013	RI COMP SLIDE AL BLK

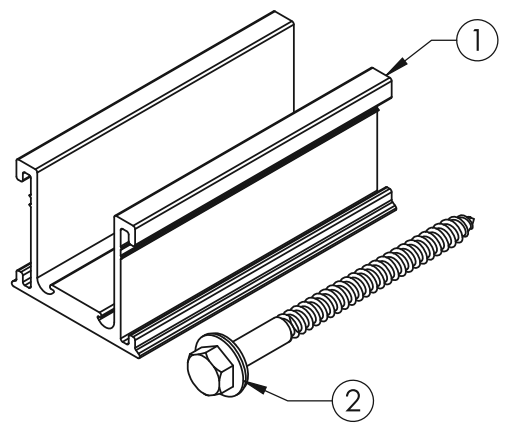

ITEM NO.	DESCRIPTION
1	ROCKIT V3 SLIDECOMP
2	LAG SCREW, 5/16-4", THREAD 3", EPDM BACKED WASHER

1) ROCKIT V3 SLIDECOMP

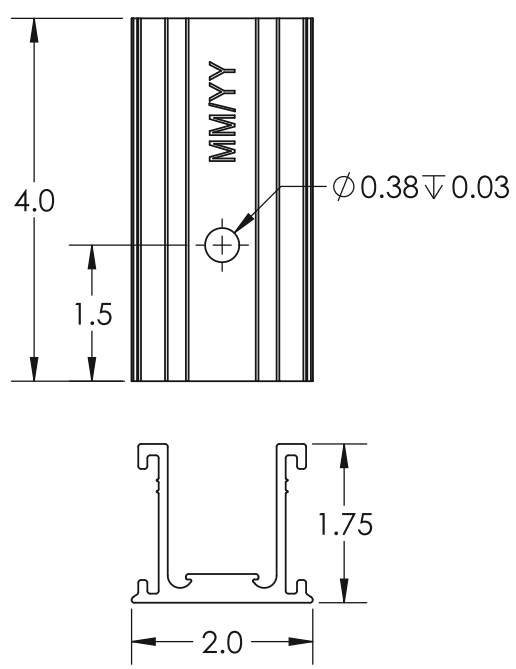

Material	Aluminum
Finish	Black

REV.- CS1

PRODUCT CUT SHEET

EcoFasten
For Installers. By Installers.

RI COMP SLIDE AL BLK

2) LAG SCREW, 5/16-4", THREAD 3", EPDM BACKED WASHER

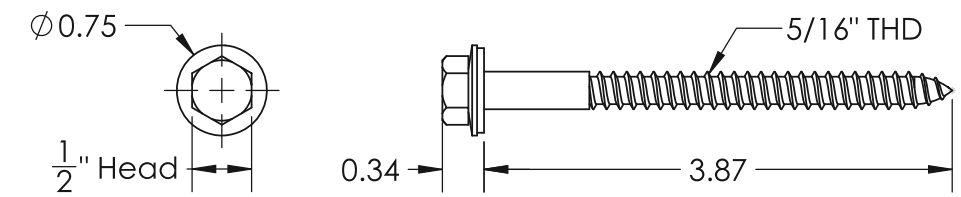

Material	Stainless Steel
Finish	Mill

REV.- CS1

PRODUCT CUT SHEET

EcoFasten
For Installers. By Installers.

GF-1 FLASHING GLV BLK 8X10"

PART NUMBER	DESCRIPTION
3012020	GF-1 FLASHING GLV BLK 8X10"

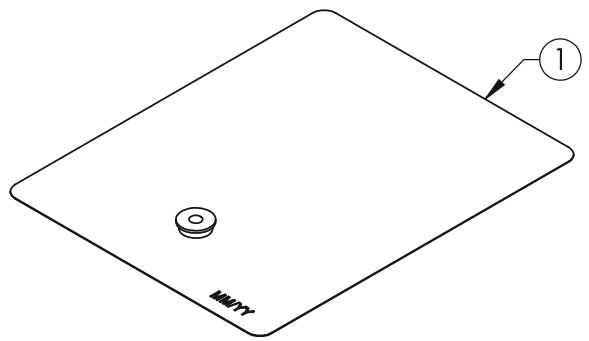

ITEM NO.	DESCRIPTION
1	GF1M-GAL-BLK-810 W/O WASHER ASSEMBLY

1) GF1M-GAL-BLK-810 W/O WASHER ASSEMBLY

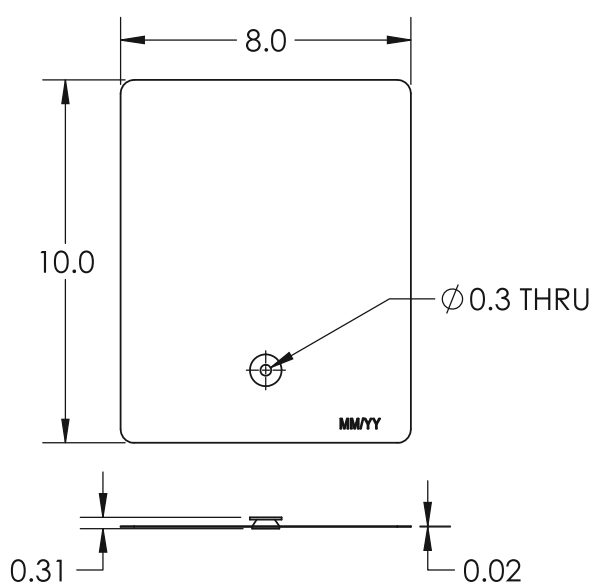

Material	Corrosion Resistant Steel
Finish	Black

REV.- CS1

EcoFasten
AN ENSTALL COMPANY

ECOFASTEN SOLAR LLC
4141 W. VAN BUREN ST., SUITE 2
PHOENIX, AZ 85009

877-859-3947
INFO@ECOFASTENSOLAR.COM

April 8th, 2024

EcoFasten
4141 West Van Buren St.
Phoenix, AZ 85009

Attn.: EcoFasten Solar Engineering Department

Re: Report # 7.16-RockIt_ CS-SS EcoFasten RockIt System, with Comp Slide or Smart Slide, Certification for Gable and Hip roofs.

This letter certifies the loading criteria and design basis used for the structural analysis of the EcoFasten - RockIt System as shown in Report # 7.16-RockIt_CS-SS "Engineering Certification for the EcoFasten - RockIt System with Comp or Smart Slide for Gable and Hip Roofs". All information, data, and analysis therein are based on, and comply with, the following building codes and typical specifications. The Span Tables provided in the referenced report may be used when all assumptions listed therein are met.

Building Codes:

1. ASCE/SEI 7-16, Minimum Design Loads for Buildings and Other Structures, by American Society of Civil Engineers
2. 2021 International Building Code (IBC)
3. 2021 International Residential Code (IRC)
4. SEAOC (Structural Engineer Association of California) report PV2-2017 Wind Design for Solar Arrays
5. AC428, Acceptance Criteria for Modular Framing Systems Used to Support Photovoltaic (PV) Panels, November 1, 2012 by ICC-ES
6. Aluminum Design Manual 2020, by The Aluminum Association, Inc.
7. ANSI/AWC NDS-2018, National Design Specification for Wood Construction, by the American Wood Council

Please note our evaluation only applies to EcoFasten products and excludes the structural adequacy of the chosen roof attachments, PV modules, or underlying roof supporting members. It shall be the responsibility of the installer or system designer to verify the structural capacity and adequacy of the referenced system components with respect to the applied or resultant loads of the chosen array configuration.

Sincerely,

NORTH CAROLINA PROFESSIONAL SEAL 042455 ENGINEER MATTHEW S KUZILA

Matthew S Kuzila, P.E.

Sealed 04.08.2024
Expires 12.31.2024