REID RESIDENCE

PHOTOVOLTAIC SYSTEM
18 TWIN OAK DR
ANGIER NC 27501

SYSTEM SIZE: 13.69 kW-DC | 11.40 kW-AC
MODULE: (37) SILFAB-SIL-370-NX-TITAN
INVERTER: (1) SOLAREDGE SE114000H-US

GOVERNING CODES:

ALL MATERIALS, EQUIPMENT, INSTALLATION AND WORK SHALL COMPLY WITH THE FOLLOWING APPLICABLE CODES:

- 2017 NATIONAL ELECTRIC CODE
- 2018 INTERNATIONAL BUILDING CODE
- 2018 INTERNATIONAL RESIDENTIAL CODE
- 2018 INTERNATIONAL PLUMBING CODE
- 2018 INTERNATIONAL FIRE CODE
- 2018 INTERNATIONAL MECHANICAL CODE
- IEEE STANDARD 929
- OSHA 29 CFR 1910.269
- WHERE APPLICABLE, RULES OF THE PUBLIC UTILITIES COMMISSION REGARDING SAFETY AND RELIABILITY
- THE AUTHORITY HAVING JURISDICTION
- MANUFACTURERS' LISTINGS AND INSTALLATION INSTRUCTIONS
- ANY OTHER LOCAL AMENDMENTS

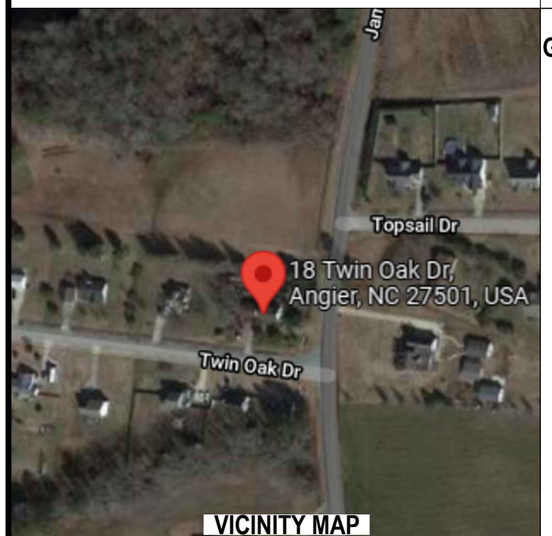

VICINITY MAP

AERIAL MAP

GENERAL

1. UTILITY SHALL BE NOTIFIED BEFORE ACTIVATION OF PHOTOVOLTAIC SYSTEM.
2. 110.2 APPROVAL: ALL ELECTRICAL EQUIPMENT SHALL BE LABELED, LISTED, OR CERTIFIED BY A NATIONALLY RECOGNIZED TESTING LABORATORY ACCREDITED BY THE UNITED STATES OCCUPATIONAL SAFETY HEALTH ADMINISTRATION
3. CONTRACTOR SHALL FIELD VERIFY ALL DIMENSIONS PRIOR TO INITIATING CONSTRUCTION.
4. CONTRACTOR SHALL REVIEW ALL MANUFACTURER INSTALLATION DOCUMENTS PRIOR TO INITIATING CONSTRUCTION.
5. ALL EQUIPMENT AND ASSOCIATED CONNECTIONS, ETC, AND ALL ASSOCIATED WIRING AND INTERCONNECTIONS SHALL BE INSTALLED ONLY BY QUALIFIED PERSONNEL.
6. THE CONTRACTOR OR OWNER MUST PROVIDE ROOF ACCESS (LADDER TO ROOF) FOR ALL THE REQUIRED INSPECTIONS. LADDERS MUST BE OSHA APPROVED, MINIMUM TYPE I WITH A 250LB. RATING, IN GOOD CONDITION AND DESIGNED FOR ITS INTENDED USE.
7. CONTRACTOR SHALL VERIFY THAT THE ROOF STRUCTURE WILL WITHSTAND THE ADDITIONAL LOADS.
8. LAG SCREWS SHALL PENETRATE A MINIMUM 2" INTO SOLID SAWN STRUCTURAL MEMBERS AND SHALL NOT EXCEED MANUFACTURER RECOMMENDATIONS FOR FASTENERS INTO ENGINEERED STRUCTURAL MEMBERS.
9. AN ACCESS POINT SHALL BE PROVIDED THAT DOES NOT PLACE THE GROUND LADDER OVER OPENINGS SUCH AS WINDOWS OR DOORS ARE LOCATED AT STRONG POINTS OF BUILDING CONSTRUCTION AND IN LOCATIONS WHERE THE ACCESS POINT DOES NOT CONFLICT WITH OVERHEAD OBSTRUCTIONS SUCH AS TREE LIMBS, WIRES, OR SIGNS.
10. WHERE DC CONDUCTORS ARE RUN INSIDE BUILDING, THEY SHALL BE CONTAINED IN A METAL RACEWAY; THEY SHALL NOT BE INSTALLED WITHIN 10" OF THE ROOF DECKING OR SHEATHING EXCEPT WHERE COVERED BY THE PV MODULES AND EQUIPMENT.
11. PLUMBING AND MECHANICAL VENTS THROUGH THE ROOF SHALL NOT BE COVERED BY SOLAR MODULES- - NO BUILDING, PLUMBING OR MECHANICAL VENTS TO BE COVERED, CONSTRUCTED OR ROUTED AROUND SOLAR MODULES.
12. ALL FIELD -INSTALLED JUNCTION, PULL AND OUTLET BOXES LOCATED BEHIND MODULES SHALL BE ACCESSIBLE DIRECTLY OR BY DISPLACEMENT OF A MODULE SECURED BY REMOVABLE FASTENERS.

ELECTRICAL

1. WIRING MATERIALS SHALL COMPLY WITH MAXIMUM CONTINUOUS CURRENT OUTPUT AT 25°C AND MAXIMUM VOLTAGE AT 600V; WIRE SHALL BE WET RATED AT 90°C.
2. EXPOSED PHOTOVOLTAIC SYSTEM CONDUCTORS ON THE ROOF WILL BE USE 2 OR PV-TYPE WIRE.
3. PHOTOVOLTAIC SYSTEM CONDUCTORS SHALL BE IDENTIFIED AND GROUPED. THE MEANS OF IDENTIFICATION SHALL BE PERMITTED BY SEPARATE COLOR-CODING, MARKING TAPE, TAGGING OR OTHER APPROVED MEANS.
4. ALL EXTERIOR CONDUIT, FITTINGS, AND BOXES SHALL BE RAIN-TIGHT AND APPROVED FOR USE IN WET LOCATIONS.
5. ALL METALLIC RACEWAYS AND EQUIPMENT SHALL BE BONDED AND ELECTRICALLY CONTINUOUS.
6. WHERE SIZES OF JUNCTION BOXES, RACEWAYS, AND CONDUITS ARE NOT SPECIFIED, CONTRACTOR SHALL SIZE THEM ACCORDING TO APPLICABLE CODES.
7. REMOVAL OF A UTILITY-INTERACTIVE INVERTER OR OTHER EQUIPMENT SHALL NOT DISCONNECT THE BUILDING CONNECTION BETWEEN THE GROUNDING ELECTRODE CONDUCTOR AND THE PV SOURCE AND/OR OUTPUT CIRCUIT GROUNDED CONDUCTOR.
8. FOR GROUNDED SYSTEMS, THE PHOTOVOLTAIC SOURCE AND OUTPUT CIRCUITS SHALL BE PROVIDED WITH A GROUND-FAULT PROTECTION DEVICE OR SYSTEM THAT DETECTS A GROUND FAULT, INDICATES THAT FAULT HAS OCCURED AND AUTOMATICALLY DISCONNECTS ALL CONDUCTORS OR CAUSES THE INVERTER TO AUTOMATICALLY CEASE SUPPLYING POWER TO OUTPUT CIRCUITS.
9. FOR UNGROUNDED SYSTEMS, THE INVERTER IS EQUIPPED WITH GROUND FAULT PROTECTION AND A GFI FUSE PORT FOR GROUND FAULT INDICATION.
10. PV MODULE FRAMES SHALL BE BONDED TO RACKING RAIL OR BARE COPPER GEC/GEC PER THE MODULE MANUFACTURER'S LISTED INSTRUCTION SHEET.
11. PV MODULE RACKING RAIL SHALL BE BONDED TO BARE COPPER GEC VIA WEEB LUG, ILSCO GBL-4DBT LAY-IN LUG, OR EQUIVALENT LISTED LUG.
12. THE PHOTOVOLTAIC INVERTER WILL BE LISTED AS UL 1741 COMPLIANT.
13. RACKING AND BONDING SYSTEM TO BE UL2703 RATED.
14. ANY REQUIRED GROUNDING ELECTRODE CONDUCTOR WILL BE CONTINUOUS, EXCEPT FOR SPLICES OR JOINTS AS BUS BARS WITHIN LISTED EQUIPMENT.
15. WHEN BACKFED BREAKER IS THE METHOD OF UTILITY INTERCONNECTION, THE BREAKERS SHALL NOT READ "LINE AND LOAD".
16. WHEN APPLYING THE 120% RULE, THE SOLAR BREAKER TO BE POSITIONED AT THE OPPOSITE END OF THE BUS BAR FROM THE MAIN BREAKER.
17. THE WORKING CLEARANCE AROUND THE EXISTING ELECTRICAL EQUIPMENT AS WELL AS THE NEW ELECTRICAL EQUIPMENT WILL BE MAINTAINED.

SHEET INDEX:

REID, ASHLEY
18 TWIN OAK DR
ANGIER NC 27501
(919) 812-4678

LICENSE # U.33714

TITAN SOLAR POWER
10815 JOHN PRICE RD,
CHARLOTTE, NC 28273
WWW.TITANSOLARPOWER.COM

COVER PAGE

JOB #: TSP102888
DATE: 10/27/2021
DRAWN BY: MJ

REV #1:
REV #2:
REV #3:

PV-1

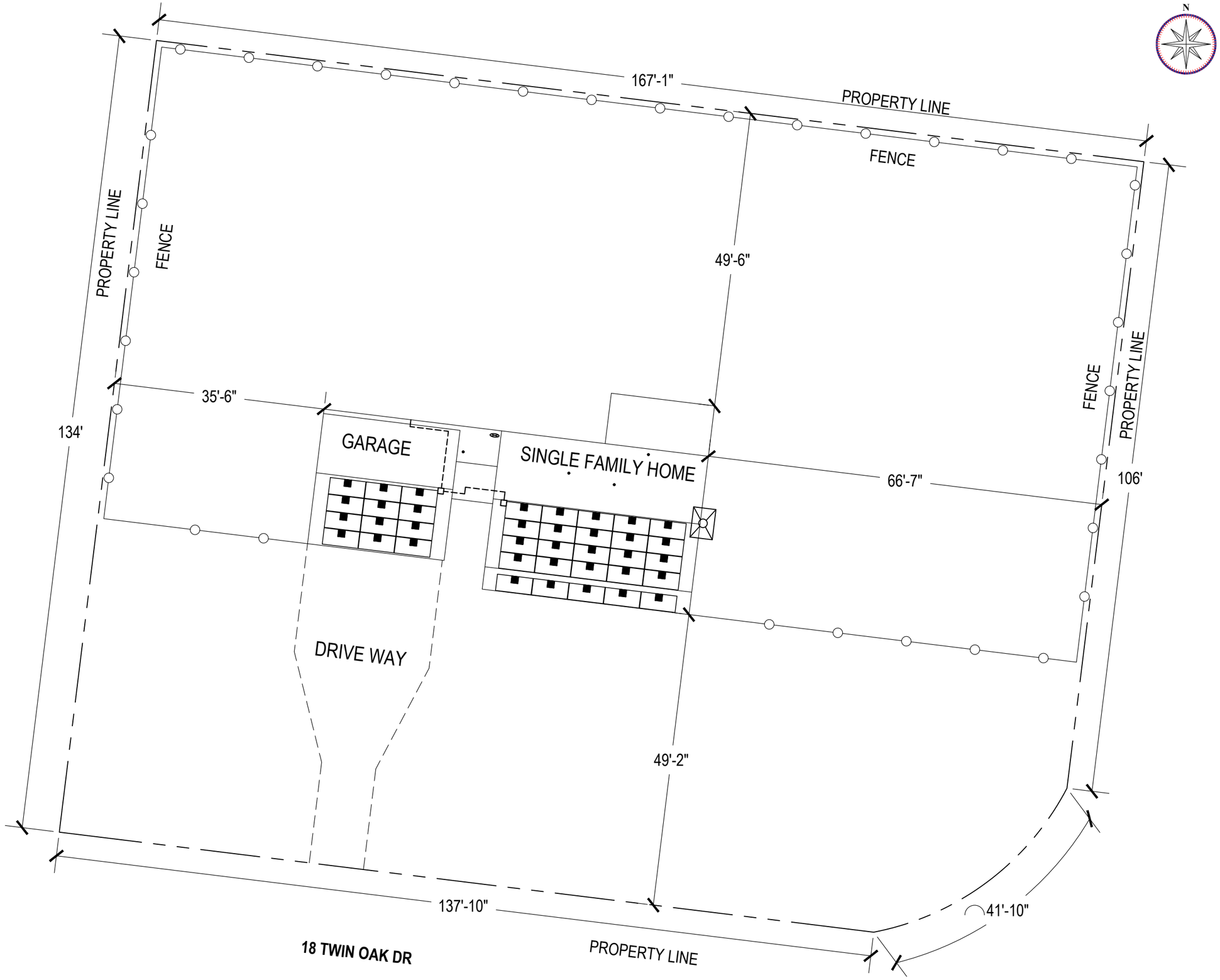

LEGEND:

PROPERTY LINE:

DRIVEWAY:

APN: 040663015404

SCALE: 1/16" = 1'-0"

REID, ASHLEY
18 TWIN OAK DR
ANGIER NC 27501
(919) 812-4678

LICENSE # U.33714

TITAN SOLAR POWER
TITAN SOLAR POWER
10815 JOHN PRICE RD,
CHARLOTTE, NC 28273
WWW.TITANSOLARPOWER.COM

PROPERTY PLAN

JOB #: TSP102888
DATE: 10/27/2021
DRAWN BY: MJ

PV-2

ROOF DETAIL	STRING DETAIL
ROOF TYPE: ASPHALT SHINGLE	SOLAREDGE STRINGS
ROOF SECTION 1: 20 MODULES AZIMUTH: 188° PITCH: 33° (1)	STRING # 1: 13 MODULES
ROOF SECTION 2: 5 MODULES AZIMUTH: 188° PITCH: 33° (2)	STRING # 2: 12 MODULES
ROOF SECTION 3: 12 MODULES AZIMUTH: 188° PITCH: 33° (3)	STRING # 3: 12 MODULES

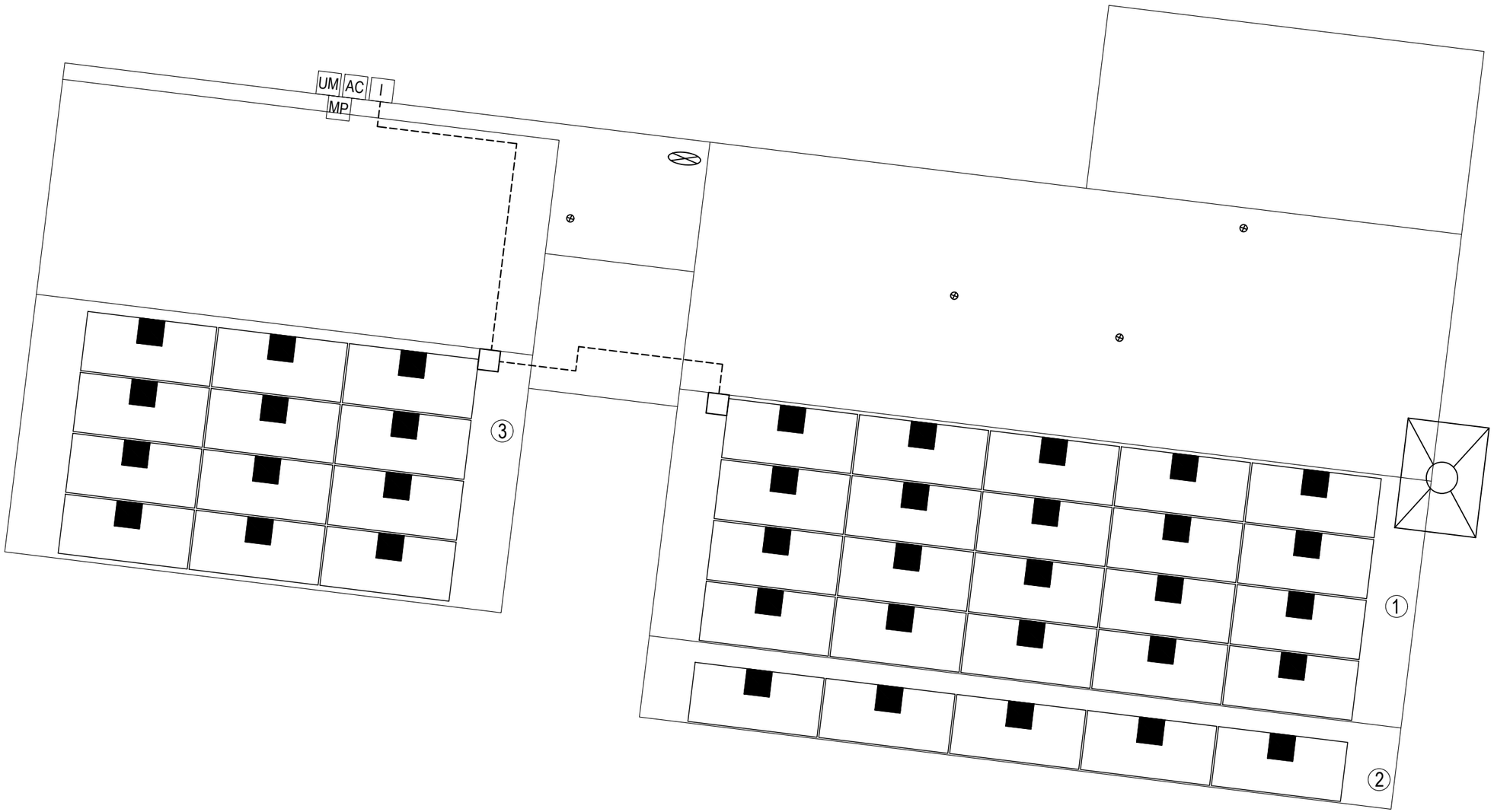

SYSTEM LEGEND

PHOTOVOLTAIC SYSTEM:
DC SYSTEM SIZE: 13.69 kW
AC SYSTEM SIZE: 11.40 kW

UM	MAIN SERVICE METER AND SERVICE POINT
MP	MAIN SERVICE PANEL
I	(1) SOLAREDGE SE114000H-US INVERTER WITH INTEGRATED DC DISCONNECT
AC	FUSED AC DISCONNECT
	(37) SILFAB-SIL-370-NX-TITAN WITH SOLAREDGE P370 OPTIMIZERS MOUNTED UNDER EACH MODULE.
	JUNCTION BOX AND CONDUIT
	CONDUIT RUN

CONDUIT TO BE RUN IN ATTIC IF POSSIBLE, OTHERWISE CONDUIT BLOCKS MIN. 1"/MAX 6" ABOVE ROOF SURFACE, CLOSE TO RIDGE LINES, AND UNDER EAVES; TO BE PAINTED TO MATCH EXTERIOR/EXISTING BACKGROUND COLOR OF ITS LOCATION; TO BE LABELED AT MAX 10' INTERVALS. CONDUIT RUNS ARE APPROXIMATE AND ARE TO BE DETERMINED IN THE BY THE INSTALLERS

SCALE: 3/16" = 1'-0"

REID, ASHLEY
18 TWIN OAK DR
ANGIER NC 27501
(919) 812-4678

LICENSE # U.33714

TITAN SOLAR POWER
10815 JOHN PRICE RD.
CHARLOTTE, NC 28273
WWW.TITANSOLARPOWER.COM

SITE PLAN

JOB #: TSP102888
DATE: 10/27/2021
DRAWN BY: MJ

PV-3

ROOF DETAIL	STRING DETAIL
ROOF TYPE: ASPHALT SHINGLE	SOLAREDGE STRINGS
ROOF SECTION 1: 20 MODULES AZIMUTH: 188° PITCH: 33° (1)	STRING # 1: 13 MODULES
ROOF SECTION 2: 5 MODULES AZIMUTH: 188° PITCH: 33° (2)	STRING # 2: 12 MODULES
ROOF SECTION 3: 12 MODULES AZIMUTH: 188° PITCH: 33° (3)	STRING # 3: 12 MODULES

ROOF AREA	1698SQ FT ROOF		
SOLAR PANEL AREA	19.8 SQ FT EACH	37 PANELS	732.6 SQ FT ARRAY
SOLAR % OF ROOF AREA	43.14%	43.14% < 33%, 18" SETBACK IS VALID	

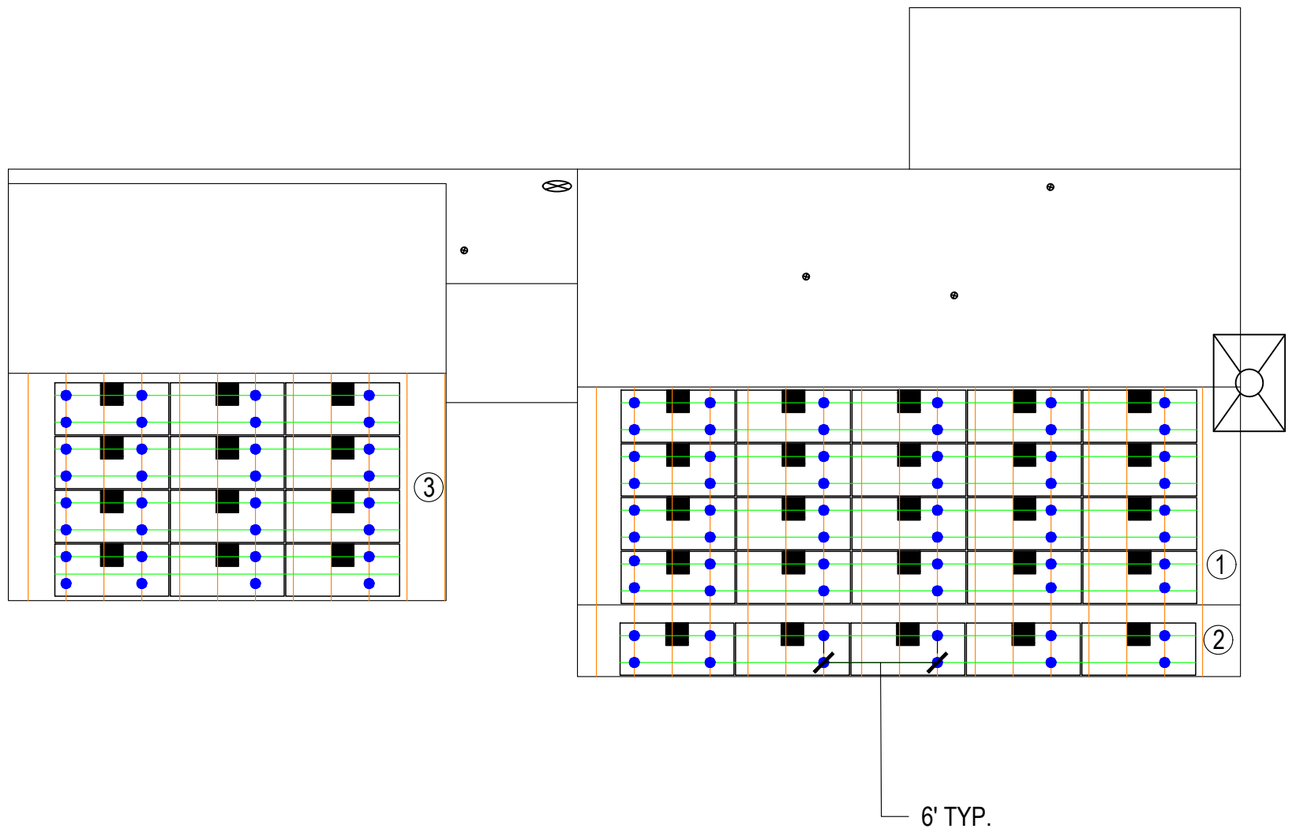

WIND UPLIFT AT ATTACHMENT POINTS IS PROVIDED WITH THE ENGINEERING LETTER.
SUPPORT LOCATIONS HAVE BEEN OPTIMIZED TO WITHSTAND UPLIFT

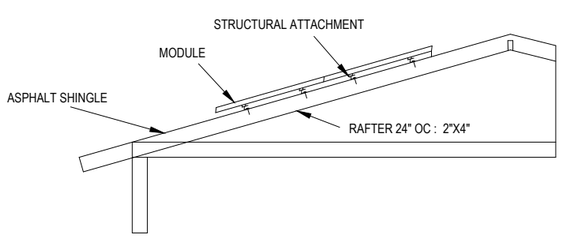

NTS

ELEVATION DETAIL

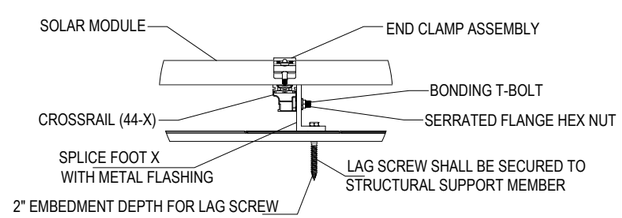

NTS

ATTACHMENT DETAIL

MODULE MECHANICAL SPECIFICATIONS	
DESIGN WIND SPEED	130 MPH
DESIGN SNOW LOAD	15 PSF
# OF STORIES	2
ROOF PITCH	33°
TOTAL ARRAY AREA (SQ. FT)	732.60
TOTAL ROOF AREA (SQ. FT)	1698
ARRAY SQ. FT / TOTAL ROOF SQ. FT	43.14%

SYSTEM LEGEND

PHOTOVOLTAIC SYSTEM:
DC SYSTEM SIZE: 13.69 kW
AC SYSTEM SIZE: 11.40 kW

- ROOF ATTACHMENT POINT
- ROOF FRAMING (RAFTER/TRUSS)
- RACKING

NOTE:- 2" LAG EMBEDMENT

SCALE: 1/8" = 1'-0"

REID, ASHLEY
18 TWIN OAK DR
ANGIER NC 27501
(919) 812-4678

LICENSE # U.33714

TITAN SOLAR POWER
TITAN SOLAR POWER
10815 JOHN PRICE RD,
CHARLOTTE, NC 28273
WWW.TITANSOLARPOWER.COM

ROOF PLAN

JOB #: TSP102888
DATE: 10/27/2021
DRAWN BY: MJ

PV-3.1

CONDUCTOR AND CONDUIT SCHEDULE					
TAG	WIRE TYPE	WIRE SIZE	# OF CONDUCTORS	CONDUIT TYPE	MIN. CONDUIT SIZE
1	PV WIRE	#10	6- L1 L2	FREE AIR	N/A
1	BARE COPPER	#6	1 - BARE	FREE AIR	N/A
2	THWN-2	#10	6 - L1 L2	EMT	3/4"
2	THWN-2 EGC	#8	1 - GND	EMT	3/4"
3	THWN-2	#6	3 - L1 L2 N	EMT	3/4"
3	THWN-2 EGC	#8	1 - GND	EMT	3/4"

PHOTOVOLTAIC SYSTEM:
DC SYSTEM SIZE: 13.690 kW
AC SYSTEM SIZE: 11.400 kW
INVERTER: (1) SOLAREDGE SE114000H-US
MODULE: (37) SILFAB-SIL-370-NX-TITAN

NOTES:
1. MODULES ARE BONDED TO RAIL USING UL 2703 RATED BONDING SYSTEM - INTEGRATED BONDING MID-CLAMPS + DIRECT-BURIAL LAY-IN-LUGS; SEE ATTACHED FOR SPECIFICATIONS IF APPLICABLE
2. PV DC SYSTEM IS UNGROUNDED
3. PV ARRAY WILL HAVE A GROUNDING ELECTRODE SYSTEM IN COMPLIANCE WITH CEC 250.58 AND 690.47(A)
4. PV SOURCE, OUTPUT, AND INVERTER INPUT CIRCUIT WIRING METHODS SHALL COMPLY WITH CEC 690.1(G)
5. BACKFED PV BREAKER WILL BE INSTALLED AT OPPOSITE END OF THE BUS BAR FROM THE MAIN BREAKER. A PERMANENT WARNING LABEL TO BE INSTALLED PER SYSTEM SIGNAGE, PAGE
6. BARE COPPER IS TRANSITIONED TO THWN-2 VIA IRREVERSIBLE CRIMP; WHEN PRESENT, THE GEC TO BE CONTINUOUS
7. INVERTER(S) TO BE COMPLIANT WITH UL 1741 SUPPLEMENT A
8. CONDUIT AND CONDUCTOR SPECIFICATIONS ARE BASED ON MINIMUM CODE REQUIREMENTS AND ARE NOT MEANT TO LIMIT UP-SIZING AS REQUIRED BY FIELD CONDITIONS
9. CONDUIT AND CONDUCTOR SPECIFICATIONS ARE BASED ON MINIMUM CODE REQUIREMENTS AND ARE NOT MEANT TO LIMIT UPSIZING AS REQUIRED BY FIELD CONDITIONS.

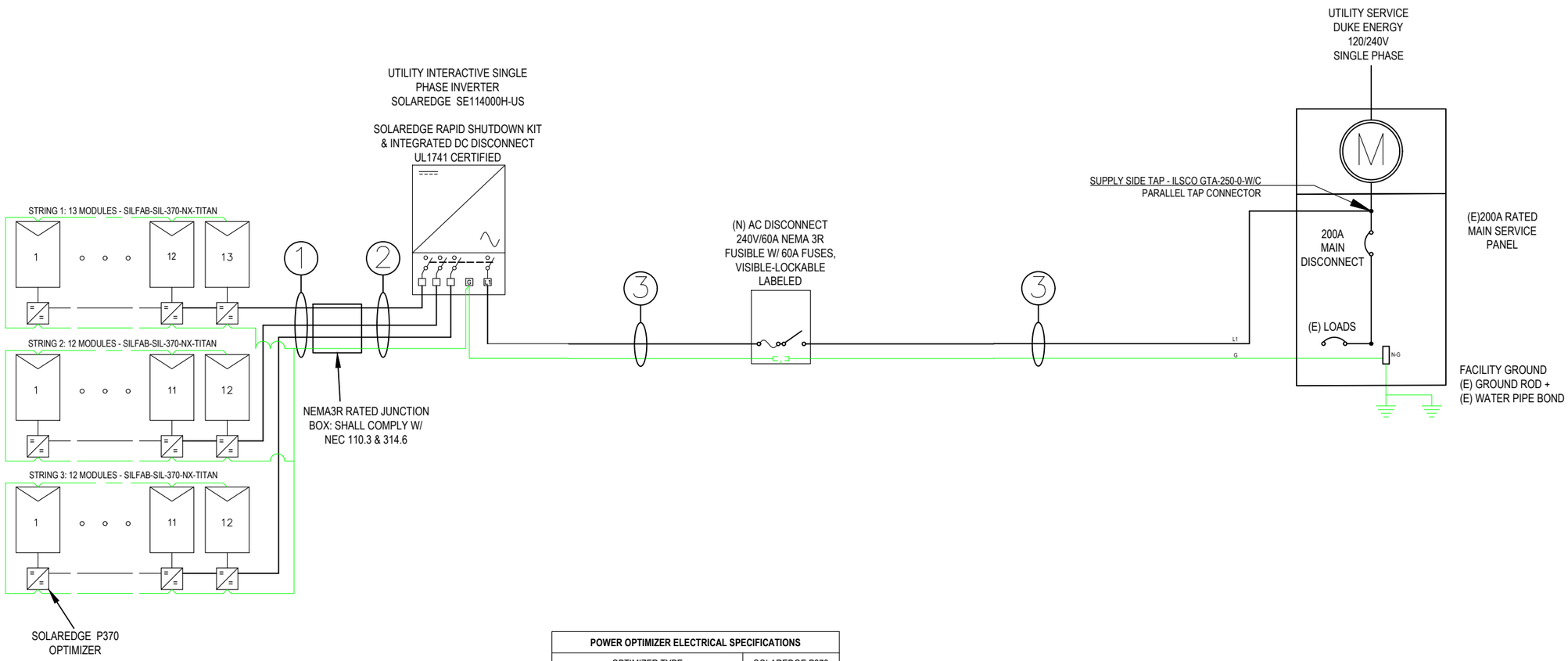

PV MODULE ELECTRICAL SPECIFICATIONS	
MODULE TYPE	SILFAB SIL-370-NX-TITAN
POWER MAX (P_{MAX})	370W
OPEN CIRCUIT VOLTAGE (V_{OC})	44.8V
SHORT CIRCUIT CURRENT (I_{SC})	10.6A
MAX POWER-POINT VOLTAGE (V_{MP})	37.2V
MAX POWER-POINT CURRENT (I_{MP})	10.0A
SERIES FUSE RATING	20A

INVERTER ELECTRICAL SPECIFICATIONS	
INVERTER TYPE	SOLAREDGE SE11400H-US
MAX INPUT DC VOLTAGE	480V
MAX INPUT CURRENT	30.5A
NOMINAL DC INPUT VOLTAGE	400V
MAXIMUM OUTPUT POWER	11400W
NOMINAL AC OUTPUT VOLTAGE	240V
MAXIMUM CONT. OUTPUT CURRENT	47.5A
CEC EFFICIENCY	99%

POWER OPTIMIZER ELECTRICAL SPECIFICATIONS	
OPTIMIZER TYPE	SOLAREDGE P370
RATED INPUT DC POWER	370W
MAXIMUM INPUT VOLTAGE (V_{OC})	60V
MAXIMUM SHORT CIRCUIT CURRENT (I_{SC})	11A
MAXIMUM DC INPUT CURRENT	13.75A
MAXIMUM OUTPUT CURRENT	15A
MAXIMUM OUTPUT VOLTAGE	60V
MINIMUM STRING LENGTH	8
MAXIMUM POWER PER STRING	5700W (6000W WITH SE7600- SE11400)

OVER-CURRENT PROTECTION DEVICE (OCPD) CALCULATIONS	
INVERTER TYPE	SOLAREDGE 11400H-US
# OF INVERTERS	1
MAX CONTINUOUS OUTPUT CURRENT	47.5A
(# OF INVERTERS) X (MAX CONT. OUTPUT CURRENT) X 125% <= OCPD RATING	
(1 x 47.5A x 1.25)= 59.38A <= 60A, OK	

REID, ASHLEY
18 TWIN OAK DR
ANGIER NC 27501
(919) 812-4678

LICENSE # U.33714

TITAN SOLAR POWER
TITAN SOLAR POWER
10815 JOHN PRICE RD,
CHARLOTTE, NC 28273
WWW.TITANSOLARPOWER.COM

1-LINE DIAGRAM & CALCULATIONS

JOB #: TSP102888
DATE: 10/27/2021
DRAWN BY: MJ

PV-4

CONDUCTOR AND CONDUIT SCHEDULE					
TAG	WIRE TYPE	WIRE SIZE	# OF CONDUCTORS	CONDUIT TYPE	MIN. CONDUIT SIZE
1	PV WIRE	#10	6- L1 L2	FREE AIR	N/A
1	BARE COPPER	#6	1 - BARE	FREE AIR	N/A
2	THWN-2	#10	6- L1 L2	EMT	3/4"
2	THWN-2 EGC	#8	1 - GND	EMT	3/4"
3	THWN-2	#6	3 - L1 L2 N	EMT	3/4"
3	THWN-2 EGC	#8	1 - GND	EMT	3/4"

PHOTOVOLTAIC SYSTEM:
DC SYSTEM SIZE: 13.690 kW
AC SYSTEM SIZE: 11.400 kW
INVERTER: (1) SOLAREDGE SE114000H-US
MODULE: (37) SILFAB-SIL-370-NX-TITAN

NOTES:
1. MODULES ARE BONDED TO RAIL USING UL 2703 RATED BONDING SYSTEM - INTEGRATED BONDING MID-CLAMPS + DIRECT-BURIAL LAY-IN-LUGS; SEE ATTACHED FOR SPECIFICATIONS IF APPLICABLE
2. PV DC SYSTEM IS UNGROUNDED
3. PV ARRAY WILL HAVE A GROUNDING ELECTRODE SYSTEM IN COMPLIANCE WITH CEC 250.58 AND 690.47(A)
4. PV SOURCE, OUTPUT, AND INVERTER INPUT CIRCUIT WIRING METHODS SHALL COMPLY WITH CEC 690.1(G)
5. BACKFED PV BREAKER WILL BE INSTALLED AT OPPOSITE END OF THE BUS BAR FROM THE MAIN BREAKER. A PERMANENT WARNING LABEL TO BE INSTALLED PER SYSTEM SIGNAGE, PAGE
6. BARE COPPER IS TRANSITIONED TO THWN-2 VIA IRREVERSIBLE CRIMP; WHEN PRESENT, THE GEC TO BE CONTINUOUS
7. INVERTER(S) TO BE COMPLIANT WITH UL 1741 SUPPLEMENT A
8. CONDUIT AND CONDUCTOR SPECIFICATIONS ARE BASED ON MINIMUM CODE REQUIREMENTS AND ARE NOT MEANT TO LIMIT UP-SIZING AS REQUIRED BY FIELD CONDITIONS
9. CONDUIT AND CONDUCTOR SPECIFICATIONS ARE BASED ON MINIMUM CODE REQUIREMENTS AND ARE NOT MEANT TO LIMIT UPSIZING AS REQUIRED BY FIELD CONDITIONS.

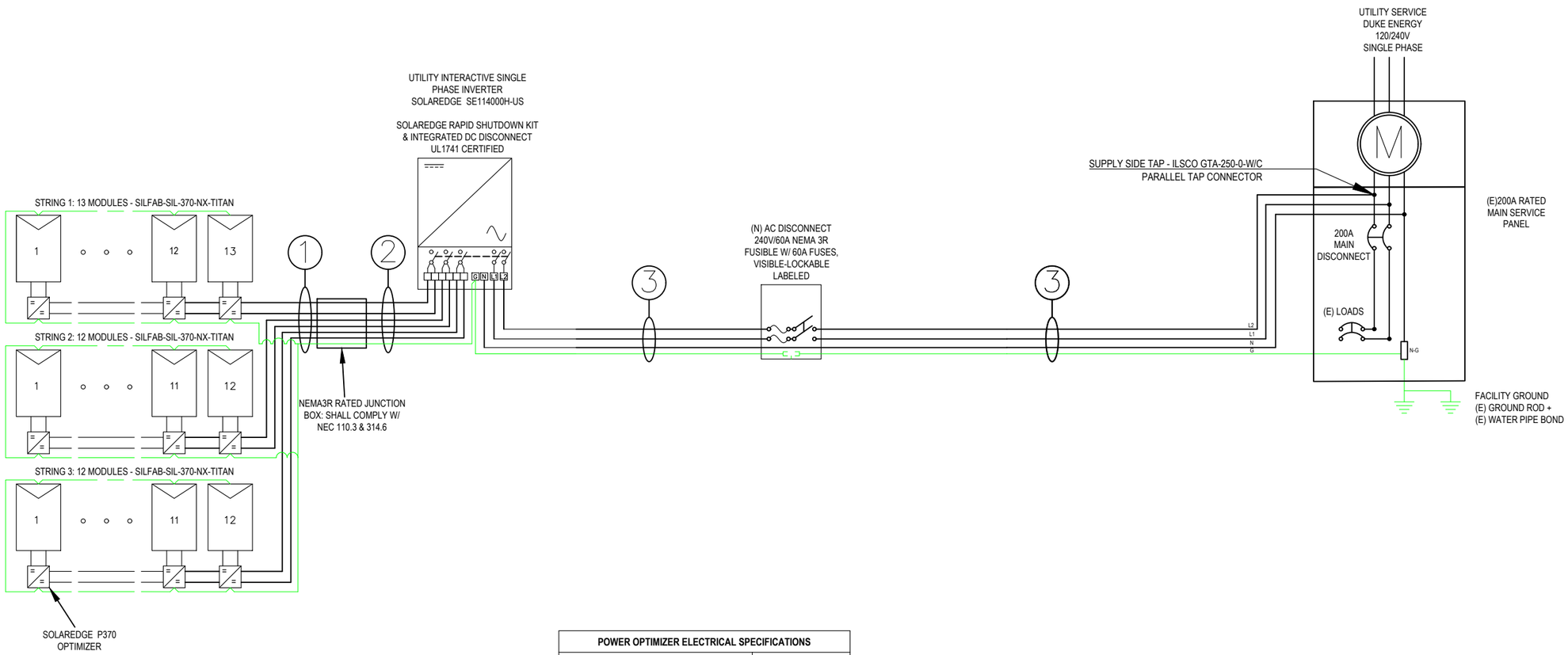

PV MODULE ELECTRICAL SPECIFICATIONS	
MODULE TYPE	SILFAB SIL-370-NX-TITAN
POWER MAX (P_{MAX})	370W
OPEN CIRCUIT VOLTAGE (V_{OC})	44.8V
SHORT CIRCUIT CURRENT (I_{SC})	10.6A
MAX POWER-POINT VOLTAGE (V_{MP})	37.2V
MAX POWER-POINT CURRENT (I_{MP})	10.0A
SERIES FUSE RATING	20A

INVERTER ELECTRICAL SPECIFICATIONS	
INVERTER TYPE	SOLAREDGE SE11400H-US
MAX INPUT DC VOLTAGE	480V
MAX INPUT CURRENT	30.5A
NOMINAL DC INPUT VOLTAGE	400V
MAXIMUM OUTPUT POWER	11400W
NOMINAL AC OUTPUT VOLTAGE	240V
MAXIMUM CONT. OUTPUT CURRENT	47.5A
CEC EFFICIENCY	99%

POWER OPTIMIZER ELECTRICAL SPECIFICATIONS	
OPTIMIZER TYPE	SOLAREDGE P370
RATED INPUT DC POWER	370W
MAXIMUM INPUT VOLTAGE (V_{OC})	60V
MAXIMUM SHORT CIRCUIT CURRENT (I_{SC})	11A
MAXIMUM DC INPUT CURRENT	13.75A
MAXIMUM OUTPUT CURRENT	15A
MAXIMUM OUTPUT VOLTAGE	60V
MINIMUM STRING LENGTH	8
MAXIMUM POWER PER STRING	5700W (6000W WITH SE7600- SE11400)

OVER-CURRENT PROTECTION DEVICE (OCPD) CALCULATIONS	
INVERTER TYPE	SOLAREDGE 11400H-US
# OF INVERTERS	1
MAX CONTINUOUS OUTPUT CURRENT	47.5A
(# OF INVERTERS) X (MAX CONT. OUTPUT CURRENT) X 125% <= OCPD RATING	
(1 x 47.5A x 1.25)= 59.38A <= 60A, OK	

REID, ASHLEY
18 TWIN OAK DR
ANGIER NC 27501
(919) 812-4678

LICENSE # U.33714

TITAN SOLAR POWER
10815 JOHN PRICE RD,
CHARLOTTE, NC 28273
WWW.TITANSOLARPOWER.COM

3-LINE DIAGRAM & CALCULATIONS

JOB #: TSP102888
DATE: 10/27/2021
DRAWN BY: MJ

PV-4.1

SOLAR PV SYSTEM EQUIPPED WITH RAPID SHUTDOWN

TURN RAPID SHUTDOWN SWITCH TO THE "OFF" POSITION TO SHUTDOWN PV SYSTEM AND REDUCE SHOCK HAZARD IN ARRAY

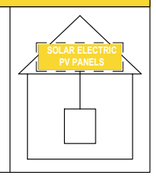

LABEL 1
AT RAPID SHUTDOWN SYSTEM
[NEC 690.56(C)(1)(A)].

! WARNING !
ELECTRIC SHOCK HAZARD
TERMINALS ON THE LINE AND LOAD SIDES MAY BE ENERGIZED IN THE OPEN POSITION.
DC VOLTAGE IS ALWAYS PRESENT WHEN SOLAR MODULES ARE EXPOSED TO SUNLIGHT

LABEL 2
AT EACH DISCONNECTING MEANS FOR PHOTOVOLTAIC EQUIPMENT
[NEC 690.15]

! WARNING !
ELECTRIC SHOCK HAZARD
TERMINALS ON BOTH LINE AND LOAD SIDES MAY BE ENERGIZED IN THE OPEN POSITION.

LABEL 3
AT EACH DISCONNECTING MEANS FOR PHOTOVOLTAIC EQUIPMENT
[NEC 690.13 AND 690.15]

MAXIMUM VOLTAGE:	480 V DC
MAXIMUM CIRCUIT CURRENT:	30.5 A DC
MAX RATED OUTPUT CURRENT OF THE CHARGE CONTROLLER OR DC-TO-DC CONVERTER (IF INSTALLED):	30.5 A DC

LABEL 4
AT EACH DC DISCONNECTING MEANS
[NEC 690.53]

PHOTOVOLTAIC AC DISCONNECT

OPERATING CURRENT:	47.5 A AC
OPERATING VOLTAGE:	240 V AC

LABEL 5
AT POINT OF INTERCONNECTION, MARKED AT DISCONNECTING MEANS
[NEC 690.54]

RAPID SHUTDOWN SWITCH FOR SOLAR PV SYSTEM

LABEL 6
AT RAPID SHUTDOWN DISCONNECT SWITCH
[NEC 690.56(C)(3)].

! WARNING !
DUAL POWER SOURCES.
SECOND SOURCE IS PV SYSTEM

LABEL 7

! CAUTION !
PHOTOVOLTAIC SYSTEM CIRCUIT IS BACKFED

LABEL 8

AT POINT OF INTERCONNECTION; LABEL, SUCH AS LABEL 7 OR LABEL 8 MUST IDENTIFY PHOTOVOLTAIC SYSTEM
[NEC 705.12(B)(4)]

BI-DIRECTIONAL METER

LABEL 9
AT UTILITY METER
[NEC 690.56(B)]

PHOTOVOLTAIC DC DISCONNECT

LABEL 10
AT EACH DC DISCONNECTING MEANS
[NEC 690.13(B)]

PHOTOVOLTAIC SYSTEM EQUIPPED WITH RAPID SHUTDOWN

LABEL 11
AT RAPID SHUTDOWN SWITCH
[NEC 690.56(C)].
LETTERS AT LEAST 3/8 INCH; WHITE ON RED BACKGROUND; REFLECTIVE
[IFC 605.11.1.1]

WARNING: PHOTOVOLTAIC POWER SOURCE

LABEL 12
AT EXPOSED RACEWAYS, CABLE TRAYS, AND OTHER WIRING METHODS; SPACED AT MAXIMUM 10 FT SECTION OR WHERE SEPARATED BY ENCLOSURES, WALLS, PARTITIONS, CEILINGS, OR FLOORS.
[NEC 690.31(G)]
LETTERS AT LEAST 3/8 INCH; WHITE ON RED BACKGROUND; REFLECTIVE
[IFC 605.11.1.1]

UTILITY AC DISCONNECT

LABEL 13
AT EACH AC DISCONNECTING MEANS
[NEC 690.13(B)]

! WARNING !
POWER SOURCE OUTPUT CONNECTION - DO NOT RELOCATE THIS OVERCURRENT DEVICE

LABEL 14
AT POINT OF INTERCONNECTION OVERCURRENT DEVICE
[NEC 705.12(B)(2)(3)(B)]

#03-359 LOCAL CODES

WARNING
THIS SERVICE METER IS ALSO SERVED BY A PHOTOVOLTAIC SYSTEM

LABEL 15
PER XCEL ON MAIN SERVICE PANEL

THIS SERVICE PANEL IS ENERGIZED FROM MORE THAN ONE SOURCE. ONLY AUTHORIZED PERSON WHO ARE FAMILIAR WITH THIS SYSTEM SHOULD ATTEMPT TO DO SERVICE WORK ON IT

WARNING:
DUAL POWER SUPPLY SOURCES: UTILITY GRID AND PV SOLAR ELECTRIC SYSTEM

PER NEC 705.12 (2)(c)

PHOTOVOLTAIC SYSTEM CONNECTED

TO BE PLACED ON UTILITY METER

TO BE PLACED ON PRODUCTION METER

SOLAR PRODUCTION METER

TO BE PLACED ON AC DISCONNECT

AC DISCONNECT

ALL SIGNAGE MUST BE PERMANENTLY ATTACHED AND BE WEATHER RESISTANT/SUNLIGHT RESISTANT AND CANNOT BE HAND-WRITTEN PER NEC 110.21(B)

PERMANENT PLAQUE OR DIRECTORY PROVIDING THE LOCATION OF THE SERVICE DISCONNECTING MEANS AND THE PHOTOVOLTAIC SYSTEM DISCONNECTING MEANS IF NOT IN THE SAME LOCATION
[NEC 690.56(B)]

WHERE THE PV SYSTEMS ARE REMOTELY LOCATED FROM EACH OTHER, A DIRECTORY IN ACCORDANCE WITH 705.10 SHALL BE PROVIDED AT EACH PV SYSTEM DISCONNECTING MEANS.
PV SYSTEM EQUIPMENT AND DISCONNECTING MEANS SHALL NOT BE INSTALLED IN BATHROOMS
[NEC 690.4(D),(E)]

LABELING NOTES
1.1 LABELING REQUIREMENTS BASED ON THE 2017 NATIONAL ELECTRICAL CODE, INTERNATIONAL FIRE CODE 605.11, OSHA STANDARD 1910.145, ANSI Z535
1.2 MATERIAL BASED ON THE REQUIREMENTS OF THE AUTHORITY HAVING JURISDICTION.
1.3 LABELS TO BE OF SUFFICIENT DURABILITY TO WITHSTAND THE ENVIRONMENT INVOLVED.
1.4 LABELS TO BE A MINIMUM LETTER HEIGHT OF 3/8" AND PERMANENTLY AFFIXED.
1.5 ALERTING WORDS TO BE COLOR CODED. "DANGER" WILL HAVE RED BACKGROUND; "WARNING" WILL HAVE ORANGE BACKGROUND; "CAUTION" WILL HAVE YELLOW BACKGROUND. [ANSI Z535]

LABELS ARE NOT DRAWN TO SCALE

REID, ASHLEY
18 TWIN OAK DR
ANGIER NC 27501
(919) 812-4678

LICENSE # U.33714

TITAN SOLAR POWER
TITAN SOLAR POWER
10815 JOHN PRICE RD,
CHARLOTTE, NC 28273
WWW.TITANSOLARPOWER.COM

ELECTRICAL LABELS

JOB #: TSP102888
DATE: 10/27/2021
DRAWN BY: MJ

PV-5

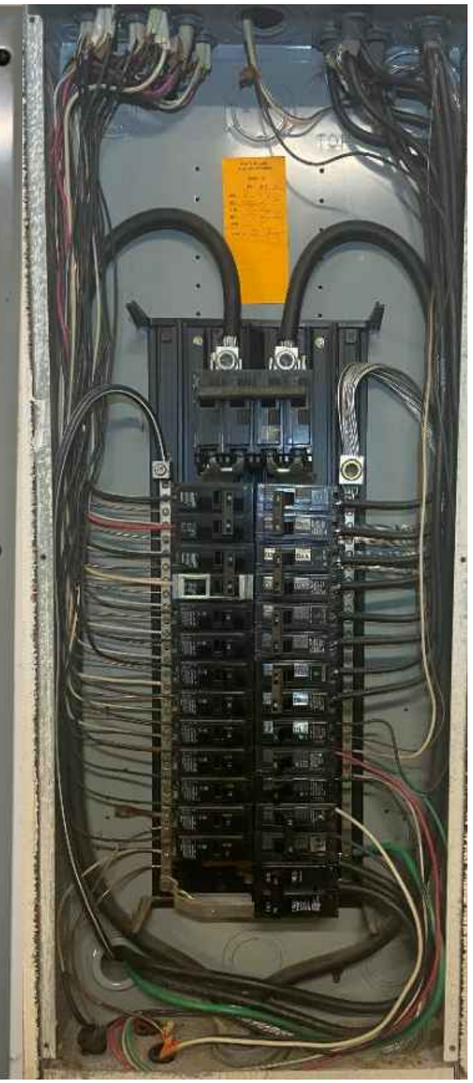

REID, ASHLEY
18 TWIN OAK DR
ANGIER NC 27501
(919) 812-4678

LICENSE # U.33714

TITAN SOLAR POWER

TITAN SOLAR POWER
10815 JOHN PRICE RD,
CHARLOTTE, NC 28273
WWW.TITANSOLARPOWER.COM

ELECTRICAL PHOTOS

JOB #: TSP102888
DATE: 10/27/2021
DRAWN BY: MJ

PV-6

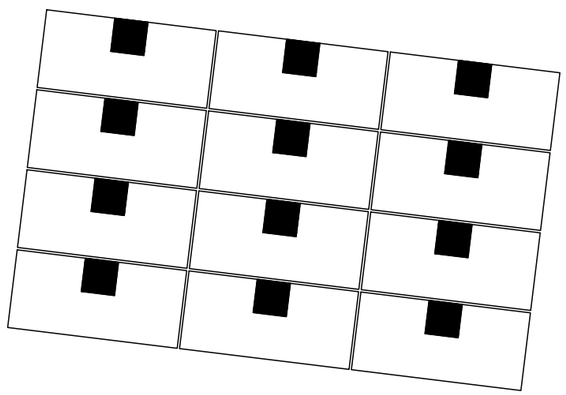

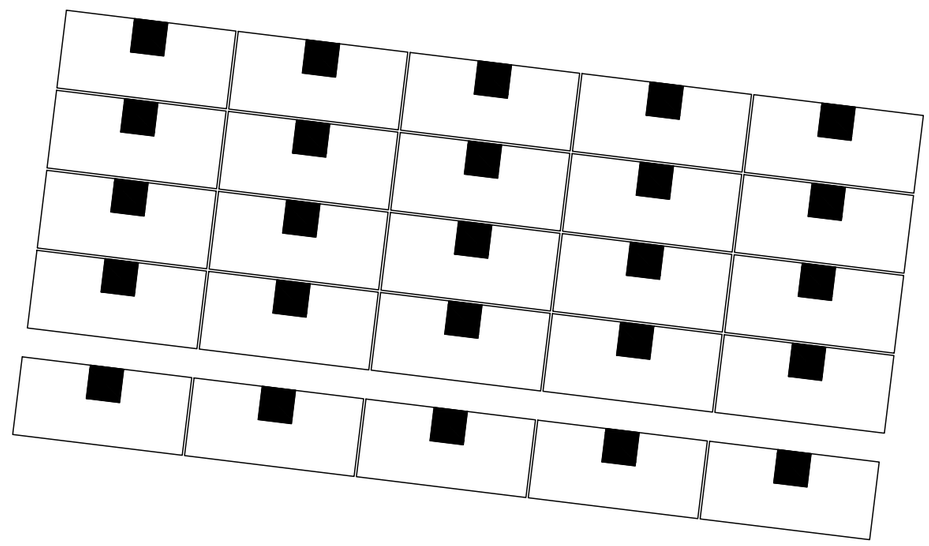

FOR INSTALLER USE ONLY

REID, ASHLEY
18 TWIN OAK DR
ANGIER NC 27501
(919) 812-4678

LICENSE # U.33714

TITAN SOLAR POWER
10815 JOHN PRICE RD,
CHARLOTTE, NC 28273
WWW.TITANSOLARPOWER.COM

OPTIMIZER MAP

JOB #: TSP102888
DATE: 10/27/2021
DRAWN BY: MJ

PV-7

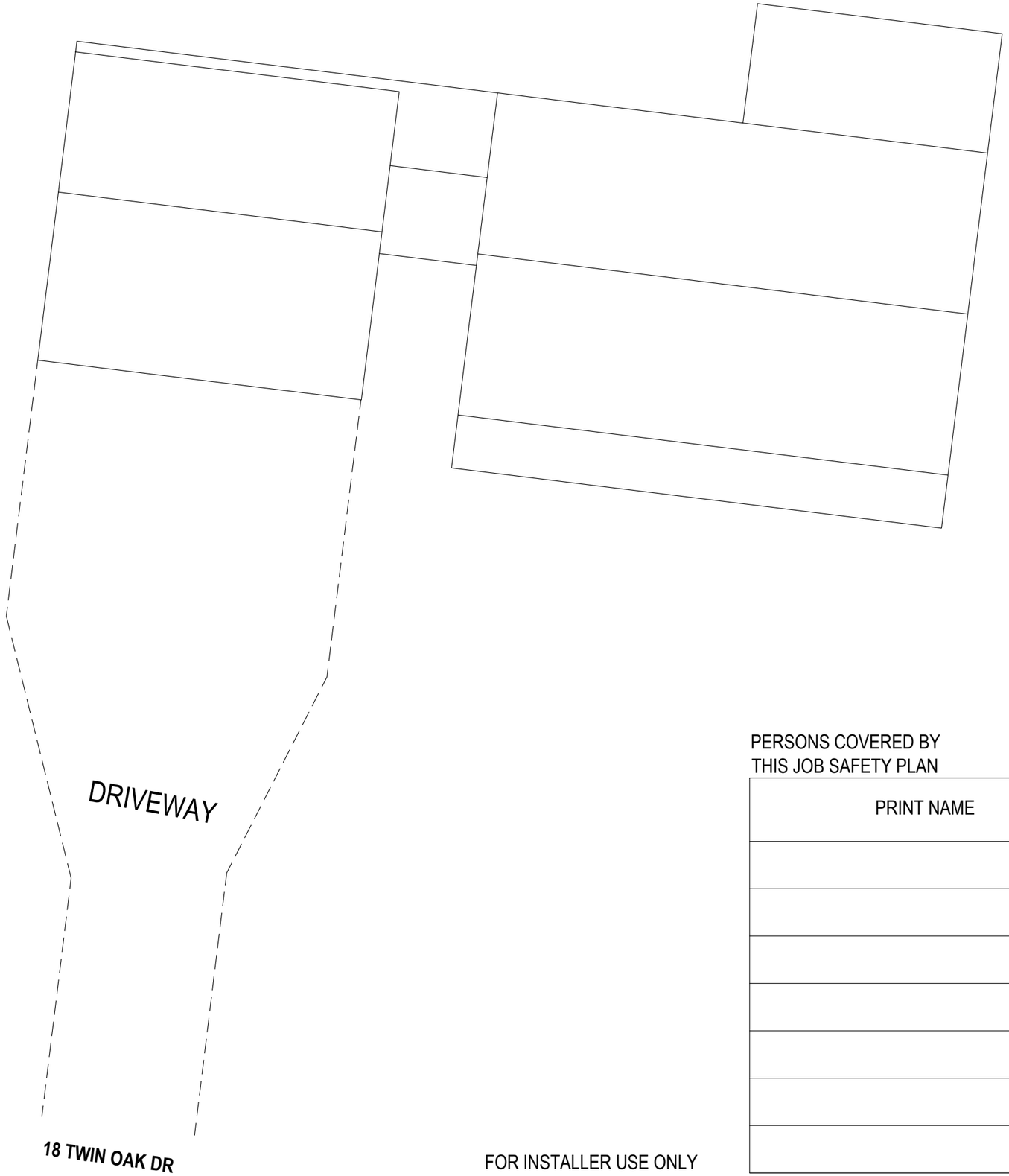

FOR INSTALLER USE ONLY

PERSONS COVERED BY THIS JOB SAFETY PLAN

INJURED AT WORK TODAT? INITIAL YES OR NO

PRINT NAME	INITIAL	YES	NO

SITE SAFETY CHECKLIST:

1. LADDER LOCATION	
2. RAZ ZONE	
3. TRUCK	
4. ANCHORS	
5. EGRESS ANCHOR (FPU)	
6. WATER LOCATION	
7. ENTRY POINTS TO HOME	
8. ROOF FALL HAZARDS	
9. EMERGENCY GATHERING POINT	

NOTE: INSTALL CREW TO MARK LOCATIONS ON DAY OF CONSTRUCTION

SCALE: 1/8" = 1'-0"

REID, ASHLEY
18 TWIN OAK DR
ANGIER NC 27501
(919) 812-4678

LICENSE # U.33714

TITAN SOLAR POWER
TITAN SOLAR POWER
10815 JOHN PRICE RD,
CHARLOTTE, NC 28273
WWW.TITANSOLARPOWER.COM

SITE SAFETY PLAN

JOB #: TSP102888
DATE: 10/27/2021
DRAWN BY: MJ

PV-8

TITAN
SOLAR PANEL

HIGH EFFICIENCY
PREMIUM
MONO-PERC
PV MODULE

CHUBB
* Chubb provides error and omission insurance to Silfab Solar Inc.

SIL-370 NX
POWERED BY
SILFAB SOLAR

INDUSTRY LEADING WARRANTY
The Titan Solar Panel is manufactured by Silfab Solar and includes an industry leading 25-year product workmanship and 30-year performance warranty.

MAXIMUM ENERGY OUTPUT
Leveraging over 35+ years of worldwide experience in the solar industry, Silfab is dedicated to superior manufacturing processes and innovations such as Bifacial and Back Contact technologies, to ensure our partners, such as Titan Solar have the latest in solar innovation.

NORTH AMERICAN QUALITY
Silfab is the leading automated solar module manufacturer in North America. Utilizing premium quality materials and strict quality control management to deliver the highest efficiency, premium quality PV modules.

BAA / ARRA COMPLIANT
These panels are designed and manufactured to meet Buy American Act Compliance. The US State Department, US Military and FAA have all utilized Silfab panels in their solar installations.

LIGHT AND DURABLE
Engineered to accommodate high wind load conditions for test loads validated up to 4000Pa uplift. The light-weight frame is exclusively designed for wide-ranging racking compatibility and durability.

QUALITY MATTERS
Total automation ensures strict quality controls during the entire manufacturing process at ISO certified facilities.

DOMESTIC SUPPORT / SERVICES
Our 500+ North American team is ready to help Titan Solar win the hearts and minds of customers, providing customer service and product delivery that is direct, efficient and local.

AESTHETICALLY PLEASING
All black sleek design, ideal for high-profile residential or commercial applications.

PID RESISTANT
PID Resistant due to advanced cell technology and material selection. In accordance to IEC 62804-1.

Electrical Specifications		SIL-370 NX mono PERC	
Test Conditions		STC	NOCT
Module Power (Pmax)	Wp	370	266
Maximum power voltage (Vpmax)	V	37.2	33.7
Maximum power current (Ipmax)	A	10.0	7.9
Open circuit voltage (Voc)	V	44.8	40.7
Short circuit current (Isc)	A	10.6	8.3
Module efficiency	%	20.2	18.2
Maximum system voltage (VDC)	V	1000	
Series fuse rating	A	20	
Power Tolerance	Wp	+/-3%	

Measurement conditions: STC 1000 W/m2 • AM 1.5 • Temperature 25 °C • NOCT 800 W/m² • AM 1.5 • Measurement uncertainty ≤ 3%
• Sun simulator calibration reference modules from Fraunhofer Institute. Electrical characteristics may vary by ±5% and power by +/-3%.

Temperature Ratings	SIL-370 NX mono PERC
Temperature Coefficient Isc	0.064 %/°C
Temperature Coefficient Voc	-0.28 %/°C
Temperature Coefficient Pmax	-0.36 %/°C
NOCT (± 2°C)	46 °C
Operating temperature	-40/+85 °C

Mechanical Properties and Components	SIL-370 NX mono PERC
Module weight	44±0.4 lbs
Dimensions (H x L x D)	72.13 in x 39.4 in x 1.5 in
Maximum surface load (wind/snow)*	83.5/112.8 lb/ft^2
Hail impact resistance	ø 1 in at 51.6 mph
Cells	66 - Si mono-PERC - 5 busbar, 62.25 x 62.25 in
Glass	0.126 in high transmittance, tempered, DSM anti-reflective coating
Cables and connectors (refer to installation manual)	47.2 in, ø 0.22 in, MC4 from Staubli
Backsheet	High durability, superior hydrolysis and UV resistance, multi-layer dielectric film, fluorine-free PV backsheet
Frame	Anodized Aluminum (Black)
Bypass diodes	3 diodes-30SQ045T (45V max DC blocking voltage, 30A max forward rectified current)
Junction Box	UL 3730 Certified, IEC 62790 Certified, IP67 rated

Warranties	SIL-370 NX mono PERC			
Module product workmanship warranty	25 years**			
Linear power performance guarantee	30 years			
	≥ 97.1% end 1st year	≥ 91.6% end 12th year	≥ 85.1% end 25th year	≥ 82.6% end 30th year

Certifications	SIL-370 NX mono PERC
Product	ULC ORD C1703, UL1703, CEC listed***, UL 61215-1/-1-1/-2, UL 61730-1/-2, IEC 61215-1/-1-1/-2***. IEC 61730-1/-2***, CSA C22.2#61730-1/-2, IEC 62716 Ammonia Corrosion; IEC61701:2011 Salt Mist Corrosion Certifed, UL Fire Rating: Type 2
Factory	ISO9001:2015

All states except California
- Modules Per Pallet: 26
- Pallets Per Truck: 34
- Modules Per Truck: 884

California
- Modules Per Pallet: 26
- Pallets Per Truck: 32
- Modules Per Truck: 832

*⚠ Warning. Read the Safety and Installation Manual for mounting specifications and before handling, installing and operating modules.

**12 year extendable to 25 years subject to registration and conditions outlined under "Warranty" at www.silfabsolar.com.

***Certification and CEC listing in progress.

PAN files generated from 3rd party performance data are available for download at:
www.silfabsolar.com/downloads.

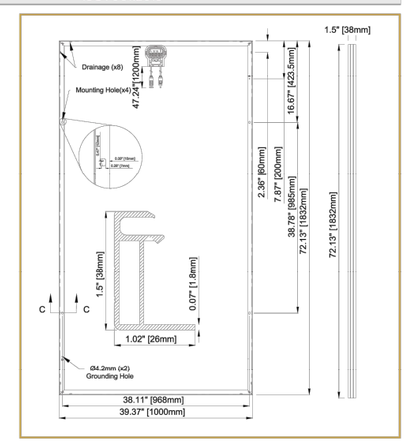

TITAN SOLAR POWER
Titan Solar Power
525 W Baseline Rd
Mesa, AZ 85210
Tel 855 SAY-SOLAR
Titansolarpower.com
info@titansolarpower

Silfab SOLAR
Silfab Solar Inc.
240 Courtneypark Drive East
Mississauga ON L5T 2Y3 Canada
Tel +1 905-255-2501 | Fax +1 905-696-0267
info@silfabsolar.com | www.silfabsolar.com

Silfab Solar Inc.
800 Cornwall Ave
Bellingham WA 98225 USA
Tel +1 360-569-4733

REID, ASHLEY
18 TWIN OAK DR
ANGIER NC 27501
(919) 812-4678

LICENSE # U.33714

TITAN SOLAR POWER
TITAN SOLAR POWER
10815 JOHN PRICE RD,
CHARLOTTE, NC 28273
WWW.TITANSOLARPOWER.COM

MODULES DATASHEET

JOB #: TSP102888
DATE: 10/27/2021
DRAWN BY: MJ

PV-9.1

Single Phase Inverter with HD-Wave Technology

for North America

SE3000H-US / SE3800H-US / SE5000H-US / SE6000H-US / SE7600H-US / SE10000H-US / SE11400H-US

INVERTERS

12-25 YEAR WARRANTY

Optimized installation with HD-Wave technology

- Specifically designed to work with power optimizers
- Record-breaking 99% weighted efficiency
- Quick and easy inverter commissioning directly from a smartphone using the SolarEdge SetApp
- Fixed voltage inverter for longer strings
- Integrated arc fault protection and rapid shutdown for NEC 2014, NEC 2017 and NEC 2020 per article 690.11 and 690.12
- UL1741 SA certified, for CPUC Rule 21 grid compliance
- Small, lightweight, and easy to install both outdoors or indoors
- Built-in module-level monitoring
- Optional: Faster installations with built-in consumption metering (1% accuracy) and production revenue grade metering (0.5% accuracy, ANSI C12.20)

solaredge.com

solaredge

Single Phase Inverter with HD-Wave Technology

for North America

SE3000H-US / SE3800H-US / SE5000H-US / SE6000H-US/ SE7600H-US / SE10000H-US / SE11400H-US

MODEL NUMBER	SE3000H-US	SE3800H-US	SE5000H-US	SE6000H-US	SE7600H-US	SE10000H-US	SE11400H-US	
APPLICABLE TO INVERTERS WITH PART NUMBER	SEXXXXH-XXXXXBXX4							
OUTPUT								
Rated AC Power Output	3000	3800 @ 240V 3300 @ 208V	5000	6000 @ 240V 5000 @ 208V	7600	10000	11400 @ 240V 10000 @ 208V	VA
Maximum AC Power Output	3000	3800 @ 240V 3300 @ 208V	5000	6000 @ 240V 5000 @ 208V	7600	10000	11400 @ 240V 10000 @ 208V	VA
AC Output Voltage Min.-Nom.-Max. (211 - 240 - 264)	✓	✓	✓	✓	✓	✓	✓	Vac
AC Output Voltage Min.-Nom.-Max. (183 - 208 - 229)	-	✓	-	✓	-	-	✓	Vac
AC Frequency (Nominal)	59.3 - 60 - 60.5(1)							Hz
Maximum Continuous Output Current @240V	12.5	16	21	25	32	42	47.5	A
Maximum Continuous Output Current @208V	-	16	-	24	-	-	48.5	A
Power Factor	1, Adjustable - 0.85 to 0.85							
GFDI Threshold	1							A
Utility Monitoring, Islanding Protection, Country Configurable Thresholds	Yes							
INPUT								
Maximum DC Power @240V	4650	5900	7750	9300	11800	15500	17650	W
Maximum DC Power @208V	-	5100	-	7750	-	-	15500	W
Transformer-less, Ungrounded	Yes							
Maximum Input Voltage	480							Vdc
Nominal DC Input Voltage	380				400			Vdc
Maximum Input Current @240V(2)	8.5	10.5	13.5	16.5	20	27	30.5	Adc
Maximum Input Current @208V(2)	-	9	-	13.5	-	-	27	Adc
Max. Input Short Circuit Current	45							Adc
Reverse-Polarity Protection	Yes							
Ground-Fault Isolation Detection	600kΩ Sensitivity							
Maximum Inverter Efficiency	99	99.2						%
CEC Weighted Efficiency	99						99 @ 240V 98.5 @ 208V	%
Nighttime Power Consumption	< 2.5							W

(1) For other regional settings please contact SolarEdge support
(2) A higher current source may be used; the inverter will limit its input current to the values stated

REID, ASHLEY
18 TWIN OAK DR
ANGIER NC 27501
(919) 812-4678

LICENSE # U.33714

TITAN SOLAR POWER
TITAN SOLAR POWER
10815 JOHN PRICE RD,
CHARLOTTE, NC 28273
WWW.TITANSOLARPOWER.COM

INVERTER DATASHEET

JOB #: TSP102888
DATE: 10/27/2021
DRAWN BY: MJ

PV-9.2

Power Optimizer

For North America

P320 / P340 / P370 / P400 / P405 / P485 / P505

POWEROPTIMIZER

PV power optimization at the module-level

- Specifically designed to work with SolarEdge inverters
- Up to 25% more energy
- Superior efficiency (99.5%)
- Mitigates all types of module mismatch losses, from manufacturing tolerance to partial shading
- Flexible system design for maximum space utilization
- Fast installation with a single bolt
- Next generation maintenance with module-level monitoring
- Meets NEC requirements for arc fault protection (AFCI) and Photovoltaic Rapid Shutdown System (PVRSS)
- Module-level voltage shutdown for installer and firefighter safety

solaredge.com

solaredge

Power Optimizer

For North America

P320 / P340 / P370 / P400 / P405 / P485 / P505

Optimizer model (typical module compatibility)	P320 (for 60-cell modules)	P340 (for high-power 60-cell modules)	P370 (for higher-power 60 and 72-cell modules)	P400 (for 72 & 96-cell modules)	P405 (for high-voltage modules)	P485 (for high-voltage modules)	P505 (for higher current modules)	
INPUT								
Rated Input DC Power[1]	320	340	370	400	405	485	505	W
Absolute Maximum Input Voltage (Voc at lowest temperature)	48		60	80	125[2]		83[2]	Vdc
MPPT Operating Range	8 - 48		8 - 60	8 - 80	12.5 - 105		12.5 - 83	Vdc
Maximum Short Circuit Current (Isc)	11			10.1			14	Adc
Maximum DC Input Current	13.75			12.5			17.5	Adc
Maximum Efficiency	99.5							%
Weighted Efficiency	98.8						98.6	%
Overvoltage Category	II							
OUTPUT DURING OPERATION (POWER OPTIMIZER CONNECTED TO OPERATING SOLAREDGE INVERTER)								
Maximum Output Current	15							Adc
Maximum Output Voltage	60				85			Vdc
OUTPUT DURING STANDBY (POWER OPTIMIZER DISCONNECTED FROM SOLAREDGE INVERTER OR SOLAREDGE INVERTER OFF)								
Safety Output Voltage per Power Optimizer	1 ± 0.1							Vdc
STANDARD COMPLIANCE								
EMC	FCC Part15 Class B, IEC61000-6-2, IEC61000-6-3							
Safety	IEC62109-1 (class II safety), UL1741							
Material	UL94 V-0 , UV Resistant							
RoHS	Yes							
INSTALLATION SPECIFICATIONS								
Maximum Allowed System Voltage	1000							Vdc
Compatible inverters	All SolarEdge Single Phase and Three Phase inverters							
Dimensions (W x L x H)	129 x 153 x 27.5 / 5.1 x 6 x 1.1			129 x 153 x 33.5 / 5.1 x 6 x 1.3	129 x 159 x 49.5 / 5.1 x 6.3 x 1.9		129 x 162 x 59 / 5.1 x 6.4 x 2.3	mm / in
Weight (including cables)	630 / 1.4			750 / 1.7	845 / 1.9		1064 / 2.3	gr / lb
Input Connector	MC4[3]					Single or dual MC4[3][4]	MC4[3]	
Input Wire Length	0.16 / 0.52							m / ft
Output Wire Type / Connector	Double Insulated / MC4							
Output Wire Length	0.9 / 2.95		1.2 / 3.9	1.2 / 3.9	1.2 / 3.9		1.2 / 3.9	m / ft
Operating Temperature Range[5]	-40 - +85 / -40 - +185							˚C / ˚F
Protection Rating	IP68 / NEMA6P							
Relative Humidity	0 - 100							%

(1) Rated power of the module at STC will not exceed the optimizer "Rated Input DC Power". Modules with up to +5% power tolerance are allowed
(2) NEC 2017 requires max input voltage be not more than 80V
(3) For other connector types please contact SolarEdge
(4) For dual version for parallel connection of two modules use the P485. In the case of an odd number of PV modules in one string, installing one P485 dual version power optimizer
(5) For ambient temperature above +85°C / +185°F power de-rating is applied. Refer to Power Optimizers Temperature De-Rating Technical Note for more details.

PV System Design Using a SolarEdge Inverter[6][7]		Single Phase HD-Wave	Single phase	Three Phase for 208V grid	Three Phase for 277/480V grid	
Minimum String Length (Power Optimizers)	P320, P340, P370, P400	8		10	18	
	P405, P485, P505	6		8	14	
Maximum String Length (Power Optimizers)		25		25	50[8]	
Maximum Power per String		5700 (6000 with SE7600-US - SE11400-US)	5250	6000[9]	12750[10]	W
Parallel Strings of Different Lengths or Orientations		Yes				

(6) For detailed string sizing information refer to: http://www.solaredge.com/sites/default/files/string_sizing_na.pdf
(7) It is not allowed to mix P405/P485/P505 with P320/P340/P370/P400 in one string
(8) A string with more than 30 optimizers does not meet NEC rapid shutdown requirements; safety voltage will be above the 30V requirement
(9) For 208V grid: it is allowed to install up to 6,500W per string when the maximum power difference between each string is 1,000W
(10) For 277/480V grid: it is allowed to install up to 17,550W per string when the maximum power difference between each string is 2,000W

Intertek RoHS

REID, ASHLEY
18 TWIN OAK DR
ANGIER NC 27501
(919) 812-4678

LICENSE # U.33714

TITAN SOLAR POWER
TITAN SOLAR POWER
10815 JOHN PRICE RD,
CHARLOTTE, NC 28273
WWW.TITANSOLARPOWER.COM

OPTIMIZER DATASHEET

JOB #: TSP102888
DATE: 10/27/2021
DRAWN BY: MJ

PV-9.3

Mounting systems for solar technology

NEW!

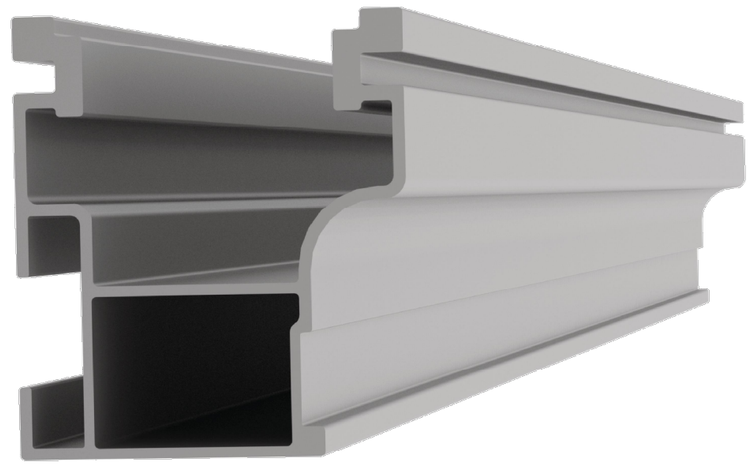

NEW PRODUCT

CrossRail 44-X

- Optimized rail profile
- One rail for all markets
- Built-in wire management
- Maintains same structural integrity as 48-X
- Tested up to 200 mph winds
- Tested up to 100 PSF snow loads

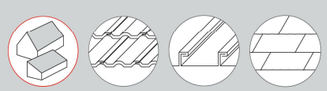

Part Number	Description
4000019	CrossRail 44-X 166'', Mill
4000020	CrossRail 44-X 166'', Dark
4000021	CrossRail 44-X 180", Mill
4000022	CrossRail 44-X 180", Dark
4000051	RailConn Set, CR 44-X, Mill
4000052	RailConn Set, CR 44-X, Dark
4000067	End Cap, Black, CR 44-X

www.everest-solarsystems.com

CrossRail 44-X Product Sheet US01 | 0520 · Subject to change · Product illustrations are exemplary and may differ from the original.

REID, ASHLEY
18 TWIN OAK DR
ANGIER NC 27501
(919) 812-4678

LICENSE # U.33714

TITAN SOLAR POWER
10815 JOHN PRICE RD,
CHARLOTTE, NC 28273
WWW.TITANSOLARPOWER.COM

RACKING DATASHEET

JOB #: TSP102888
DATE: 10/27/2021
DRAWN BY: MJ

PV-9.4

We support PV systems
Formerly Everest Solar Systems

Splice Foot X

Patent Pending

TECHNICAL SHEET

Item Number	Description	Part Number
1	Splice Foot X	4000113 | Splice Foot X Kit, Mill
2	K2 FlexFlash Butyl	
3	M5 x 60 lag screws	
4	T-Bolt & Hex Nut Set	

Technical Data

	Splice Foot X
Roof Type	Composition shingle
Material	Aluminum with stainless steel hardware
Finish	Mill
Roof Connection	M5 x 60 lag screws
Code Compliance	UL 2703
Compatibility	CrossRail 44-X, 48-X, 48-XL, 80

We support PV systems
Formerly Everest Solar Systems

Units: [in] mm

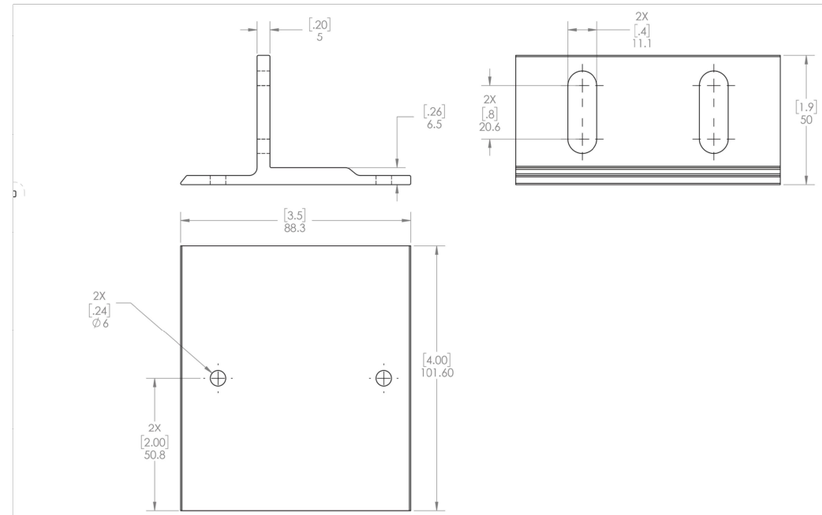

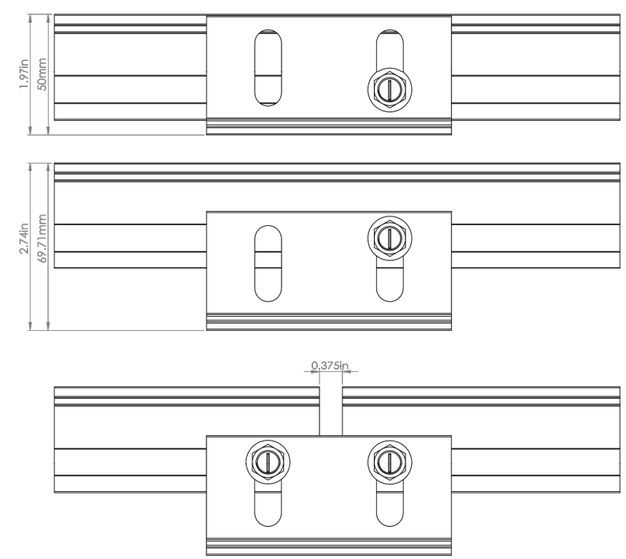

k2-systems.com

REID, ASHLEY
18 TWIN OAK DR
ANGIER NC 27501
(919) 812-4678

LICENSE # U.33714

TITAN SOLAR POWER
TITAN SOLAR POWER
10815 JOHN PRICE RD.
CHARLOTTE, NC 28273
WWW.TITANSOLARPOWER.COM

MOUNTING DATASHEET

JOB #: TSP102888
DATE: 10/27/2021
DRAWN BY: MJ

PV-9.5

CAUTION

POWER TO THIS BUILDING IS SUPPLIED FROM THE FOLLOWING SOURCES WITH DISCONNECTS LOCATED AS SHOWN

SERVICE 1 OF 1

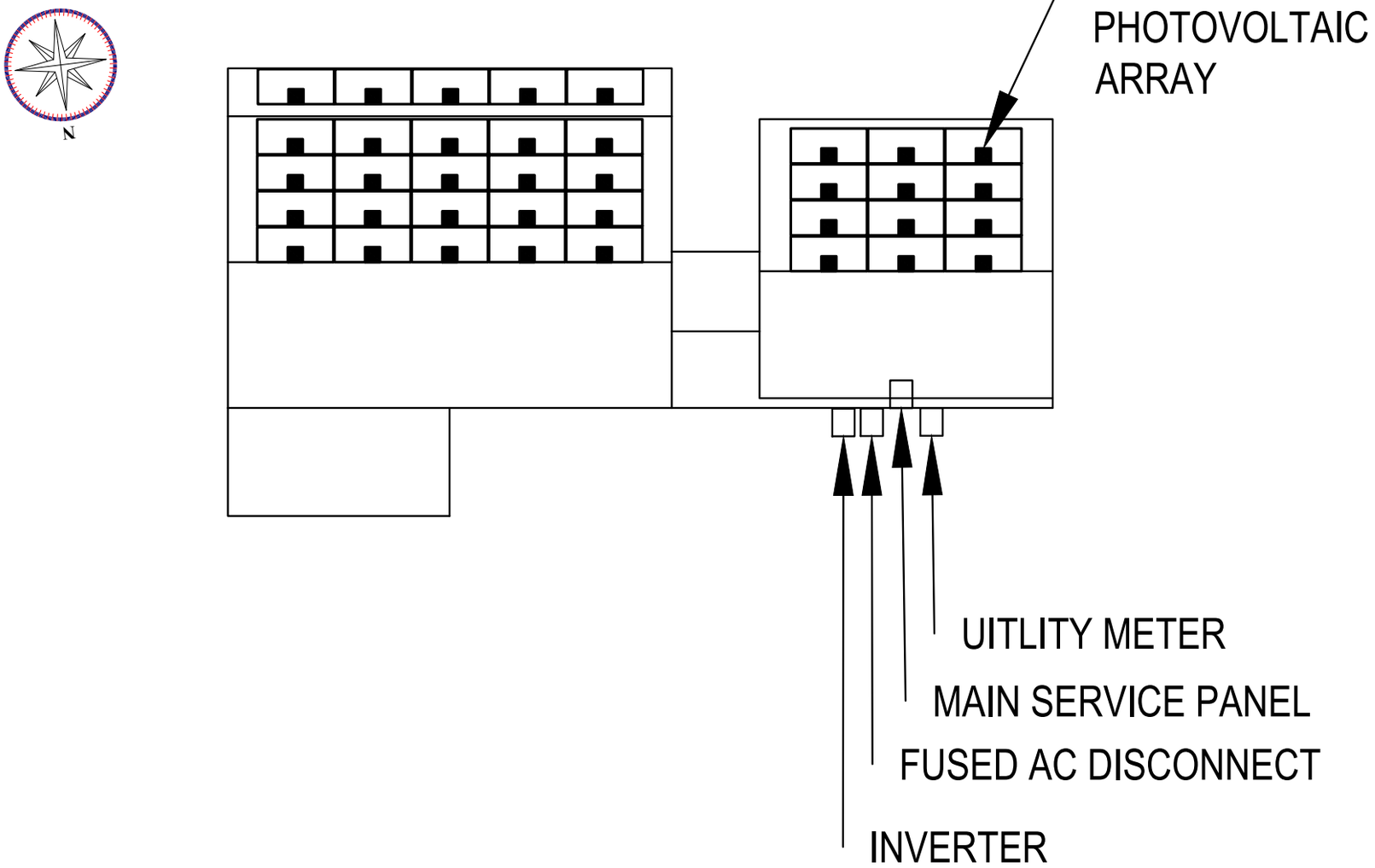

18 TWIN OAK DR, ANGIER NC 27501