Scott E. Wyssling, PE, PP, CME

**Scott E. Wyssling, PE**
76 North Meadowbrook Drive
Alpine, UT 84004
office (201) 874-3483
swyssling@wysslingconsulting.com

June 21, 2021

SCOTT E WYSSLING, PE

Digitally signed by SCOTT E WYSSLING, PE
DN: C=US, S=Utah, L=Alpine, O=Wyssling Consulting, OU=Owner, CN="SCOTT E WYSSLING, PE", E=swyssling@wysslingconsulting.com
Reason: I am the author of this document
Location: your signing location here
Date: 2021-06-21 06:59:05
Foxit PhantomPDF Version: 9.7.5

Sigora Solar
1222 Harris Street
Charlottesville, VA 22903

Re: Engineering Services
Staton Residence
20 Pine Needles Drive, Lillington, NC
10.080 kW System Size

To Whom it May Concern:

Pursuant to your request, we have reviewed the following information regarding solar panel installation on the roof of the above referenced home:

1. Site Visit/Verification Form prepared by a Sigora Solar representative identifying specific site information including size and spacing of rafters for the existing roof structure.
2. Photographs of the interior and exterior of the roof system identifying existing structural members and their conditions.

Based on the above information we have evaluated the structural capacity of the existing roof system to support the additional loads imposed by the solar panels and have the following comments related to our review and evaluation:

***Description of Residence:***

The existing residence is typical wood framing construction with the roof system consisting of truss system with all chords constructed of 2 x 2 dimensional lumber at 24" on center. The attic space is unfinished and photos indicate that there was free access to visually inspect the size and condition of the roof rafters. All wood material utilized for the roof system is assumed to be Doug-Fir #2 or better with standard construction components. The existing roofing material consists of metal roofing. Photos of the dwelling also indicate that there is a permanent foundation.

***A. Loading Criteria Used***

- 125 MPH wind loading based on ASCE 7-10 Exposure Category "C" at a slope of 13 & 15 degrees
- 7 PSF = Dead Load roofing/framing Live Load = 20 PSF Snow Load = 10 PSF
- 3 PSF = Dead Load solar panels/mounting hardware

  *Total Dead Load =10 PSF*

*The above values are within acceptable limits of recognized industry standards for similar structures in accordance with the North Carolina Residential Code (2012). Analysis performed of the existing roof structure utilizing the above loading criteria indicates that the existing rafters will support the additional panel loading without damage, if installed correctly.*

***B. Solar Panel Anchorage***

1. The solar panels shall be mounted in accordance with the most recent "*S-5 Installation Manual*", which can be found on the S-5 website (*http://s-5.com/*). If during solar panel installation, the roof framing members appear unstable or deflect non-uniformly, our office should be notified before proceeding with the installation.

2. System will be attached to the metal roofing material utilizing the patented S-5 connection. Installation of the connections shall be in accordance with the manufacturer's recommendations.
3. Considering the roof slopes, the size, spacing, condition of roof, the panel supports shall be placed no greater than 48" o/c.

***C. Solar Panel Layout***

Based on the above evaluation, it is the opinion of this office that with appropriate panel anchors being utilized the roof system will adequately support the additional loading imposed by the solar panels. This evaluation is in conformance with the North Carolina Residential Code, current industry and standards, and based on information supplied to us at the time of this report.

Should you have any questions regarding the above or if you require further information do not hesitate to contact me.

Very truly yours,

Scott E. Wyssling, PE
North Carolina License No. 46546

NORTH CAROLINA PROFESSIONAL SEAL 046546 ENGINEER SCOTT E. WYSSLING

North Carolina Firm License No. 46546

# PROJECT DESCRIPTION:

28 x REC SOLAR: REC360AA BLACK 360W MONO MODULES
ROOF MOUNTED SOLAR PHOTOVOLTAIC MODULES
DC SYSTEM SIZE: 10.080kW DC
AC SYSTEM SIZE: 8.120kW AC

EQUIPMENT SUMMARY
28 REC SOLAR: REC360AA BLACK 360W MONO MODULES
28 ENPHASE IQ7PLUS-72-2-US 290W MICRO INVERTERS
EQUIPED WITH RAPID SHUTDOWN

ROOF ARRAY AREA #1:- 244.66 SQ FT.
ROOF ARRAY AREA #2:- 225.84 SQ FT.
ROOF ARRAY AREA #3:- 56.46 SQ FT.

AUTHORITIES HAVING JURISDICTION
BUILDING: HARNETT, COUNTY OF (NC)
ZONING: HARNETT, COUNTY OF (NC)

APPLICABLE CODES & STANDARDS
NCBC 2018
NEC 2017

DESIGN SPECIFICATION
OCCUPANCY: II
CONSTRUCTION: SINGLE-FAMILY
ZONING: RESIDENTIAL
GROUND SNOW LOAD: REFER STRUCTURAL LETTER
WIND EXPOSURE: REFER STRUCTURAL LETTER
WIND SPEED: REFER STRUCTURAL LETTER

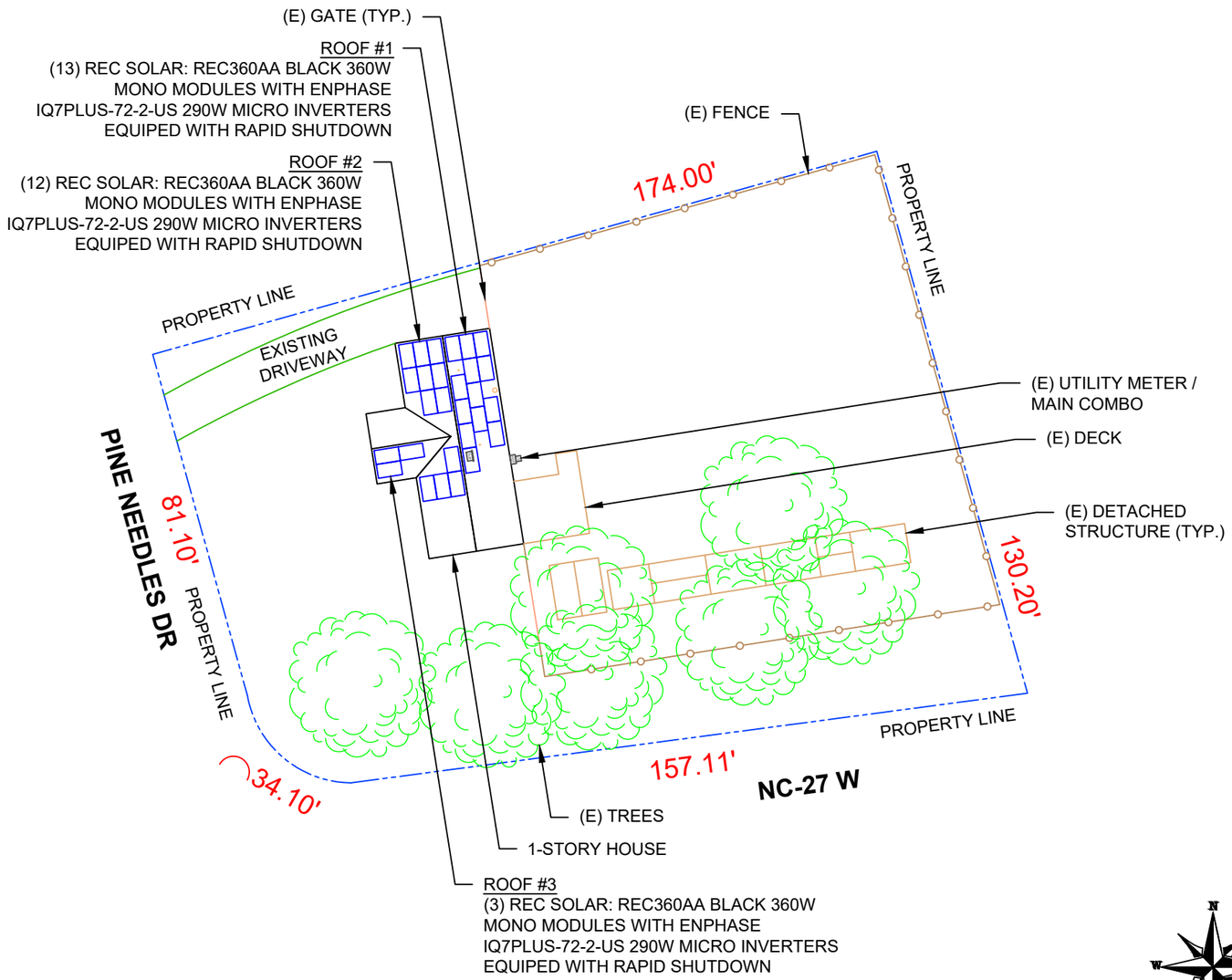


1 PLOT PLAN WITH ROOF PLAN
PV-1 SCALE: 1/32" = 1'-0"

2 HOUSE PHOTO
PV-1 SCALE: NTS

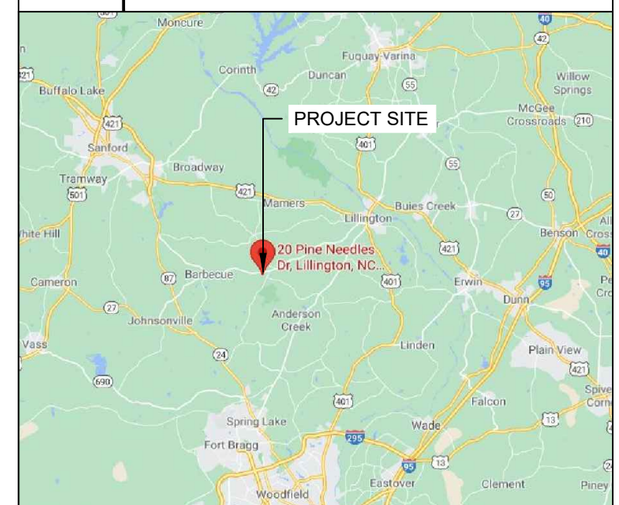


3 VICINITY MAP
PV-1 SCALE: NTS

SHEET INDEX


| | |
|---|---|
| PV-1 | PLOT PLAN WITH ROOF PLAN |
| PV-2 | ROOF PLAN & MODULES |
| PV-2A | CIRCUIT LAYOUT |
| PV-3 | ATTACHMENT DETAIL |
| PV-4 | ELECTRICAL LINE DIAGRAM |
| PV-5 | PLACARD |
| PV-6 | MICRO INVERTER CHART |
| PV-7 | MODULE SPECIFICATIONS |
| PV-8 | INVERTER SPECIFICATIONS |
| PV-9 | COMBINER SPECIFICATIONS |
| PV-10 | RAIL SPECIFICATIONS |
| PV-11 | ATTACHMENT SPECIFICATIONS |



SIGORA SOLAR
SIGORA SOLAR LLC
490 WESTFIELD RD STE A
CHARLOTTESVILLE, VA 22901


REVISIONS

| DESCRIPTION | DATE | REV |
|---|---|---|
| INITIAL | 06/21/2021 | |
| | | |
| | | |
| | | |
| | | |
| | | |

DATE:06/21/2021

PROJECT NAME & ADDRESS
WILBERT STATON RESIDENCE
20 PINE NEEDLES DR, LILLINGTON, NC 27546

DRAWN BY
ESR

SHEET NAME
PLOT PLAN WITH ROOF PLAN

SHEET SIZE
ANSI B
11" X 17"

SHEET NUMBER
PV-1

## MODULE TYPE, DIMENSIONS & WEIGHT

NUMBER OF MODULES = 28 MODULES
MODULE TYPE = REC SOLAR: REC360AA BLACK 360W MONO MODULES
MODULE WEIGHT = 42.99 LBS / 19.5KG
MODULE DIMENSIONS = 67.75"x 40.00" = 18.82 SF

### ARRAY AREA & ROOF AREA CALC'S

| TOTAL PV ARRAY AREA (SQ. FT.) | TOTAL ROOF AREA (Sq. Ft.) | ROOF AREA COVERED BY ARRAY (%) |
|---|---|---|
| 526.96 | 1268.43 | 42 |

### ROOF DESCRIPTION

| ROOF TYPE | | | | METAL ROOF | |
|---|---|---|---|---|---|
| ROOF | # OF MODULES | ROOF PITCH | AZIMUTH | RAFTER SIZE | RAFTER SPACING |
| #1 | 13 | 13° | 81° | 2X4 | 24" |
| #2 | 12 | 13° | 261° | 2X4 | 24" |
| #3 | 3 | 15° | 171° | 2X4 | 24" |

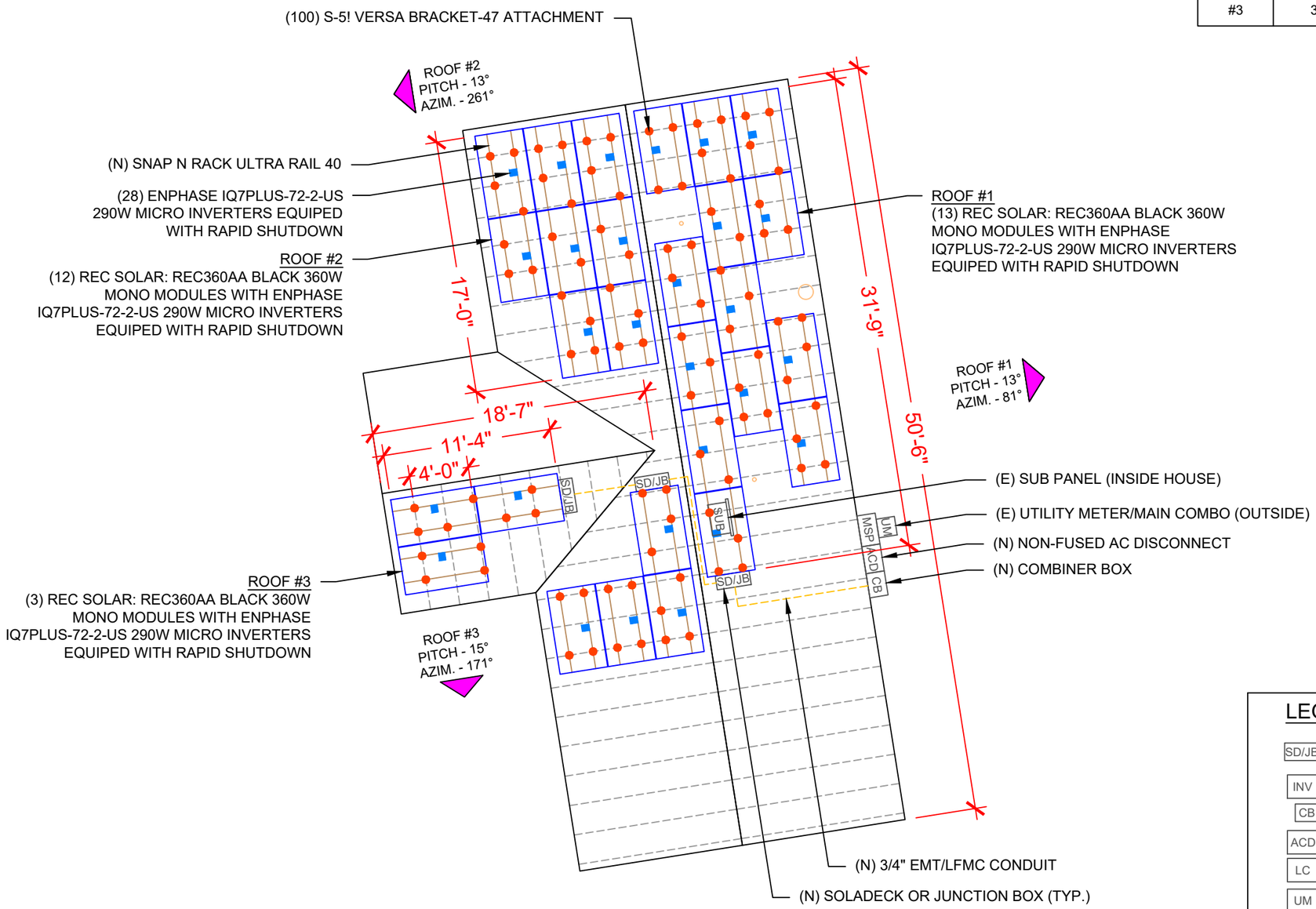


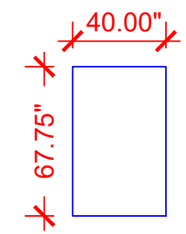


REC SOLAR:
REC360AA BLACK
360W MODULES

### LEGEND

- SD/JB - SOLADECK OR JUNCTION BOX
- INV - INVERTER
- CB - COMBINER BOX
- ACD - AC DISCONNECT
- LC - LOAD CENTER
- UM - UTILITY METER
- MSP - MAIN SERVICE PANEL
- VENT, ATTIC FAN (ROOF OBSTRUCTION)
- ROOF ATTACHMENT
- RAFTER
- CONDUIT

1 ROOF PLAN & MODULES
PV-2 SCALE: 1/8" = 1'-0"


SIGORA SOLAR
SIGORA SOLAR LLC
490 WESTFIELD RD STE A
CHARLOTTESVILLE, VA 22901


REVISIONS

| DESCRIPTION | DATE | REV |
|---|---|---|
| INITIAL | 06/21/2021 | |

DATE:06/21/2021

PROJECT NAME & ADDRESS

WILBERT STATON RESIDENCE
20 PINE NEEDLES DR, LILLINGTON, NC 27546

DRAWN BY
ESR

SHEET NAME
ROOF PLAN & MODULES

SHEET SIZE
ANSI B
11" X 17"

SHEET NUMBER
PV-2

| CIRCUIT LEGENDS |
|---|
| CIRCUIT #1 |
| CIRCUIT #2 |
| CIRCUIT #3 |

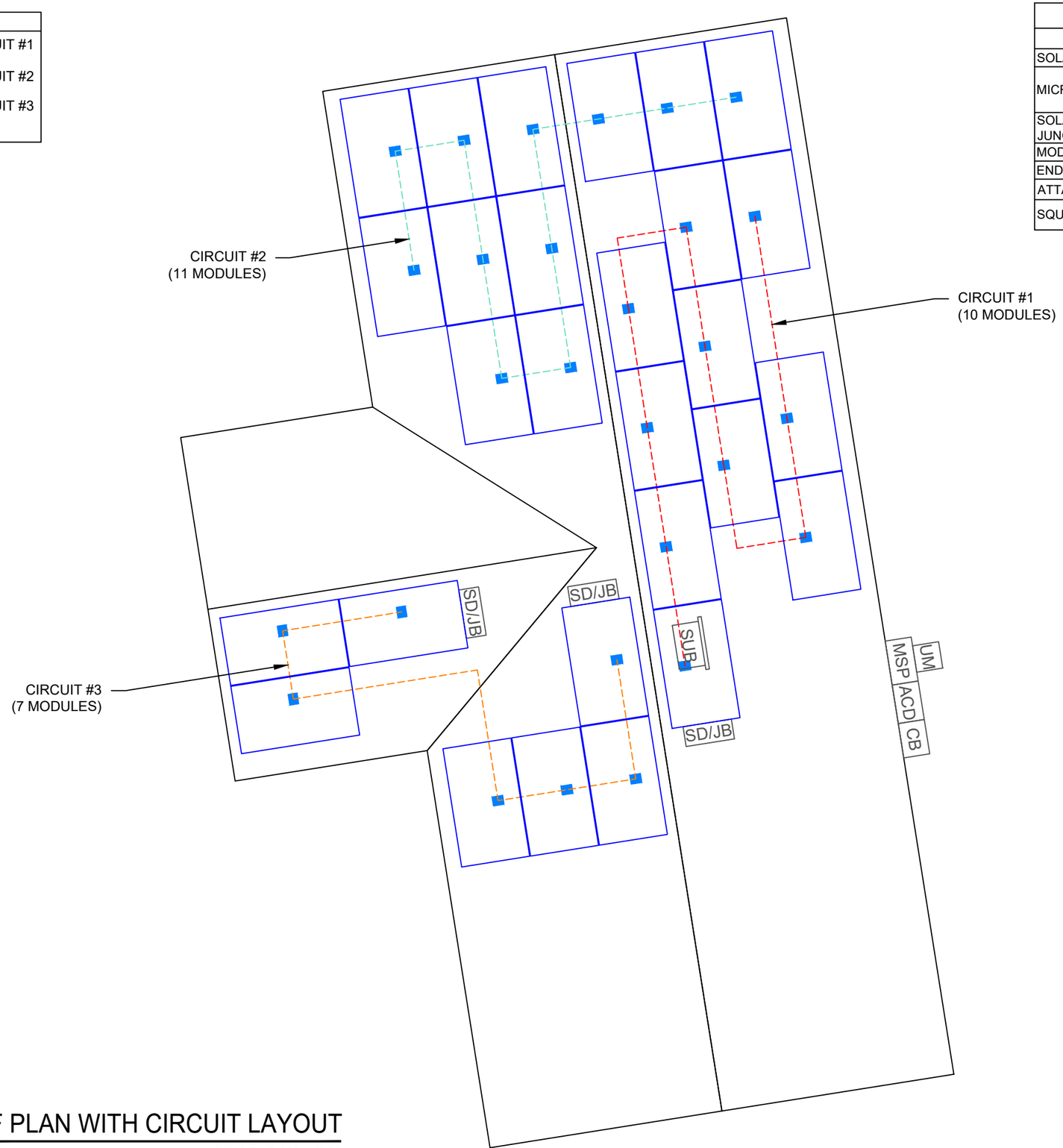


## BILL OF MATERIALS

| EQUIPMENT | QTY | DESCRIPTION |
|---|---|---|
| SOLAR PV MODULES | 28 | REC SOLAR: REC360AA BLACK 360W |
| MICRO INVERTERS | 28 | ENPHASE IQ7PLUS-72-2-US 290W MICRO INVERTERS EQUIPED WITH RAPID SHUTDOWN |
| SOLADECK OR JUNCTION BOX | 3 | SOLADECK OR JUNCTION BOX |
| MODULE CLAMPS | 30 | MID MODULE CLAMPS |
| END CLAMPS | 52 | END CLAMPS / STOPPER SLEEVE |
| ATTACHMENT | 100 | S-5! VERSA BRACKET-47 ATTACHMENT |
| SQUARE-BOLT | 100 | SQUARE-BOLT BONDING ATTACHMENT HARDWARE |

1 ROOF PLAN WITH CIRCUIT LAYOUT

PV-2A

SCALE: 3/16" = 1'-0"

SIGORA SOLAR

SIGORA SOLAR LLC
490 WESTFIELD RD STE A
CHARLOTTESVILLE, VA 22901

REVISIONS

| DESCRIPTION | DATE | REV |
|---|---|---|
| INITIAL | 06/21/2021 | |
| | | |
| | | |
| | | |
| | | |
| | | |

DATE:06/21/2021

PROJECT NAME & ADDRESS

WILBERT STATON RESIDENCE

20 PINE NEEDLES DR, LILLINGTON, NC 27546

DRAWN BY

ESR

SHEET NAME

CIRCUIT LAYOUT

SHEET SIZE

ANSI B
11" X 17"

SHEET NUMBER

PV-2A

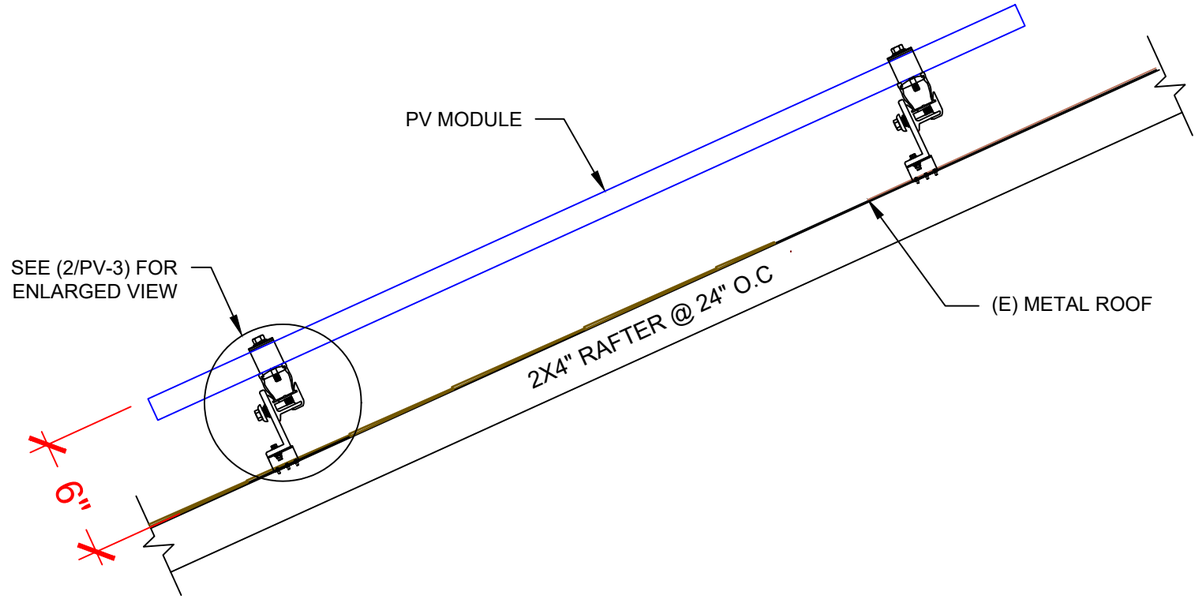


1 STRUCTURAL ATTACMENT (SIDE VIEW)

PV-3

SCALE: N.T.S

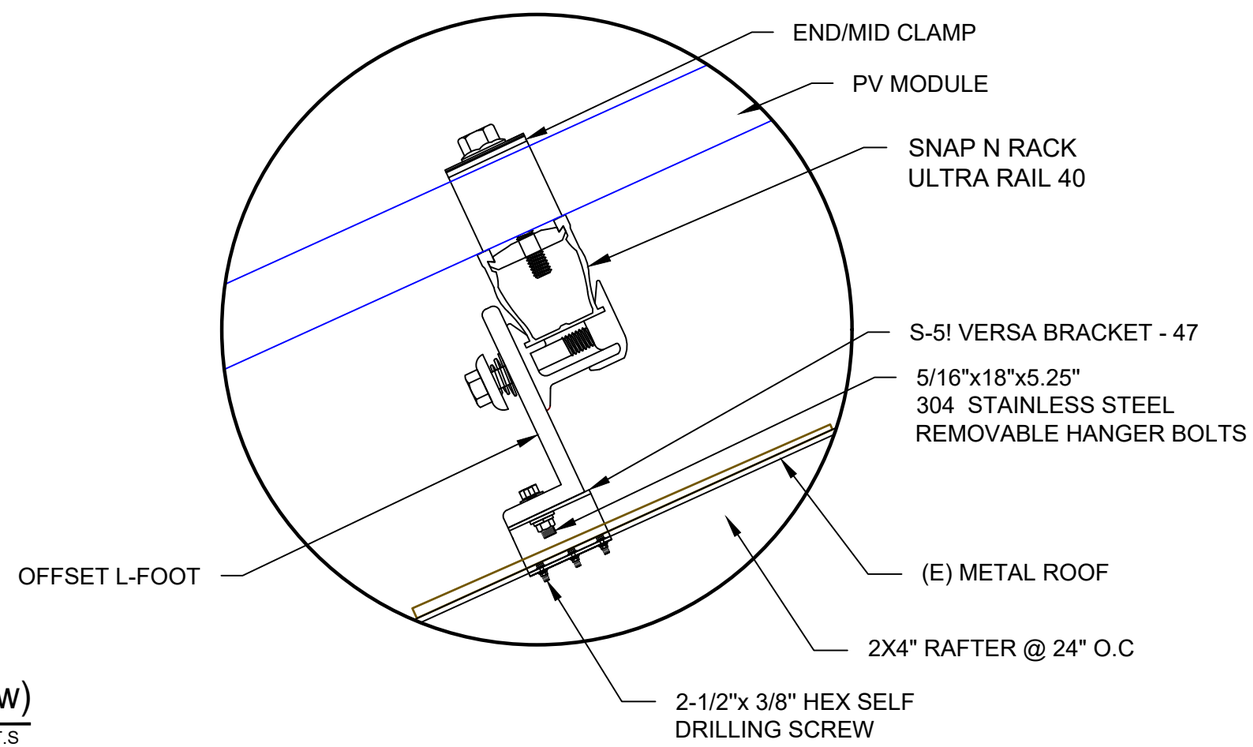


2 ATTACHMENT DETAIL (enlarged view)

PV-3

SCALE: N.T.S

SIGORA SOLAR

SIGORA SOLAR LLC
490 WESTFIELD RD STE A
CHARLOTTESVILLE, VA 22901

REVISIONS

| DESCRIPTION | DATE | REV |
|---|---|---|
| INITIAL | 06/21/2021 | |
| | | |
| | | |
| | | |
| | | |
| | | |

DATE:06/21/2021

PROJECT NAME & ADDRESS

WILBERT STATON RESIDENCE

20 PINE NEEDLES DR,
LILLINGTON, NC 27546

DRAWN BY

ESR

SHEET NAME

ATTACHMENT DETAIL

SHEET SIZE

ANSI B
11" X 17"

SHEET NUMBER

PV-3

DC SYSTEM SIZE: 10.080 kW DC
AC SYSTEM SIZE: 8.120 kW AC

(28) REC SOLAR: REC360AA BLACK 360W MONO MODULES
WITH (28) ENPHASE IQ7PLUS-72-2-US 290W MICRO INVERTERS
EQUIPED WITH RAPID SHUTDOWN
(1) BRANCH CIRCUIT OF 10 MODULES,
(1) BRANCH CIRCUIT OF 11 MODULES AND
(1) BRANCH CIRCUIT OF 7 MODULES CONNECTED IN PARALLEL

**GROUNDING & GENERAL NOTES:**

1. A SECOND FACILITY GROUNDING ELECTRODE IS NOT REQUIRED PER [NEC 690.47(C)(3)]
2. PV INVERTER IS UNGROUNDED, TRANSFORMER-LESS TYPE.
3. DC GEC AND AC EGC TO REMAIN UNSPLICED, OR SPLICED TO EXISTING ELECTRODE
4. ANY EXISTING WIRING INVOLVED WITH PV SYSTEM CONNECTION THAT IS FOUND TO BE INADEQUATE PER CODE SHALL BE CORRECTED PRIOR TO FINAL INSPECTION.
5. SOLADECK OR JUNCTION BOX QUANTITIES, AND PLACEMENT SUBJECT TO CHANGE IN THE FIELD - SOLADECK OR JUNCTION BOX DEPICTED ON ELECTRICAL DIAGRAM REPRESENT WIRE TYPE TRANSITIONS.
6. AC DISCONNECT NOTED IN EQUIPMENT SCHEDULE OPTIONAL IF OTHER AC DISCONNECTING MEANS IS LOCATED WITHIN 10' OF SERVICE DISCONNECT
7. RACEWAYS AND CABLES EXPOSED TO SUNLIGHT ON ROOFTOPS SHOULD BE INSTALLED MORE THAN 7/8" ABOVE THE ROOF USING CONDUIT SUPPORTS.
8. TEMPERATURE RATINGS OF ALL CONDUCTORS, TERMINATIONS, BREAKERS, OR OTHER DEVICES ASSOCIATED WITH THE SOLAR PV SYSTEM SHALL BE RATED FOR AT LEAST 75 DEGREE C.

**INTERCONNECTION NOTES:**

1. INTERCONNECTION SIZING, LIMITATIONS AND COMPLIANCE DETERMINED IN ACCORDANCE WITH [NEC 705.12], AND [NEC 690.64].
2. GROUND FAULT PROTECTION IN ACCORDANCE WITH [NEC 215.9], [NEC 230.95] AND [NEC 690.5]
3. ALL EQUIPMENT TO BE RATED FOR BACKFEEDING.
4. PV BREAKER TO BE POSITIONED AT THE OPPOSITE END OF THE BUSBAR RELATIVE TO THE MAIN BREAKER.

**DISCONNECT NOTES**:

1. DISCONNECTING SWITCHES SHALL BE WIRED SUCH THAT WHEN THE SWITCH IS OPENED THE CONDUCTORS REMAINING LIVE ARE CONNECTED TO THE TERMINALS MARKED "LINE SIDE" (TYPICALLY THE UPPER TERMINALS)
2. AC DISCONNECT MUST BE ACCESSIBLE TO QUALIFIED UTILITY PERSONNEL, BE LOCKABLE, AND BE A VISIBLE-BREAK SWITCH

**RACKING NOTE:**

1. BOND EVERY RAIL WITH #6 BARE COPPER

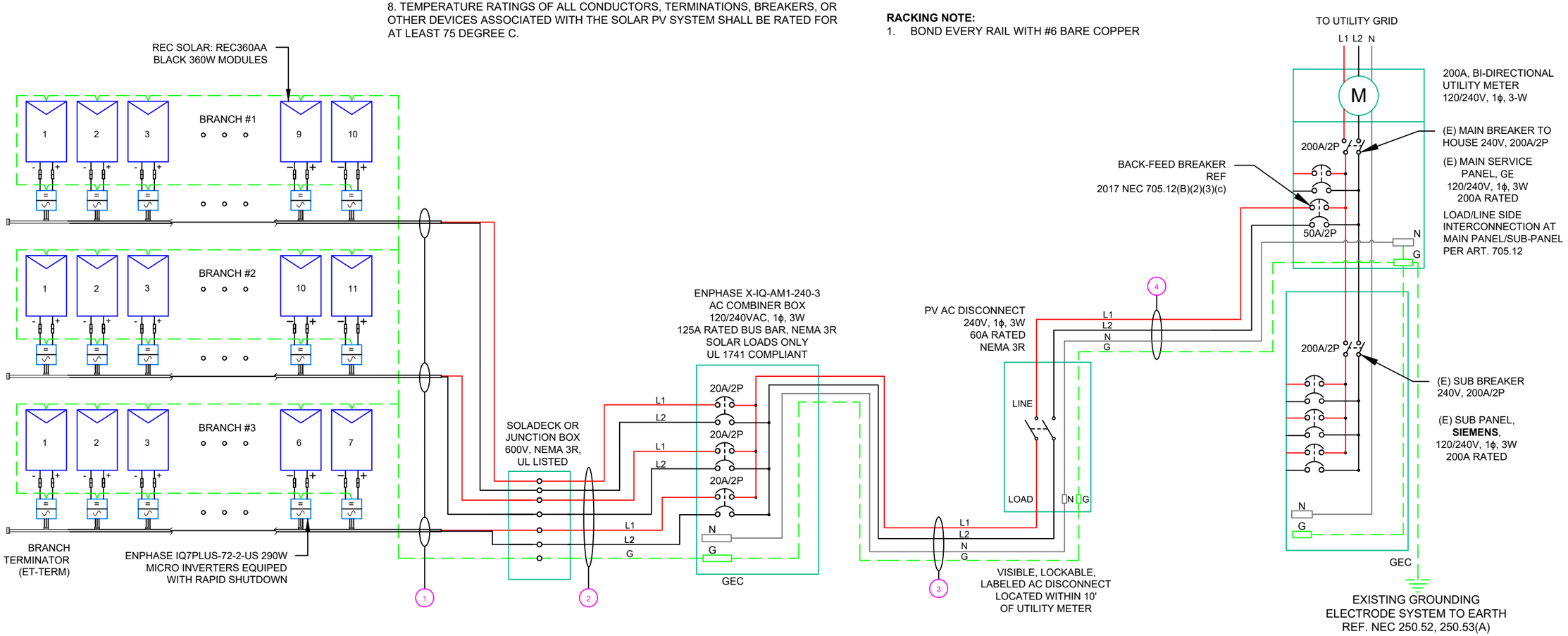


| | QTY | CONDUCTOR INFORMATION | | CONDUIT TYPE | CONDUIT SIZE |
|---|---|---|---|---|---|
| 1 | (6) | #12AWG - | ENPHASE ENGAGE CABLE (L1 & L2 NO NEUTRAL) | N/A | N/A |
| | (1) | #6AWG - | BARE COPPER IN FREE AIR | | |
| 2 | (6) | #10AWG - | CU,THWN-2 | EMT OR LFMC | 3/4" |
| | (1) | #10AWG - | CU,THWN-2 GND | | |
| 3 | (2) | #8AWG - | CU,THWN-2 | EMT,LFMC OR PVC | 3/4" |
| | (1) | #8AWG - | CU,THWN-2 N | | |
| | (1) | #10AWG - | CU,THWN-2 GND | | |
| 4 | (2) | #8AWG - | CU,THWN-2 | EMT, LFMC OR PVC | 3/4" |
| | (1) | #8AWG - | CU,THWN-2 N | | |
| | (1) | #10AWG - | CU,THWN-2 GND | | |

1 ELECTRICAL LINE DIAGRAM
PV-4 SCALE: NTS

SIGORA SOLAR
SIGORA SOLAR LLC
490 WESTFIELD RD STE A
CHARLOTTESVILLE, VA 22901

| REVISIONS | | |
|---|---|---|
| DESCRIPTION | DATE | REV |
| INITIAL | 06/21/2021 | |

DATE:06/21/2021

PROJECT NAME & ADDRESS
WILBERT STATON RESIDENCE
20 PINE NEEDLES DR, LILLINGTON, NC 27546

DRAWN BY
ESR

SHEET NAME
ELECTRICAL LINE DIAGRAM

SHEET SIZE
ANSI B
11" X 17"

SHEET NUMBER
PV-4

# CAUTION

POWER TO THIS BUILDING IS ALSO SUPPLIED FROM ROOF MOUNTED SOLAR ARRAYS WITH SAFETY DISCONNECTS AS SHOWN:

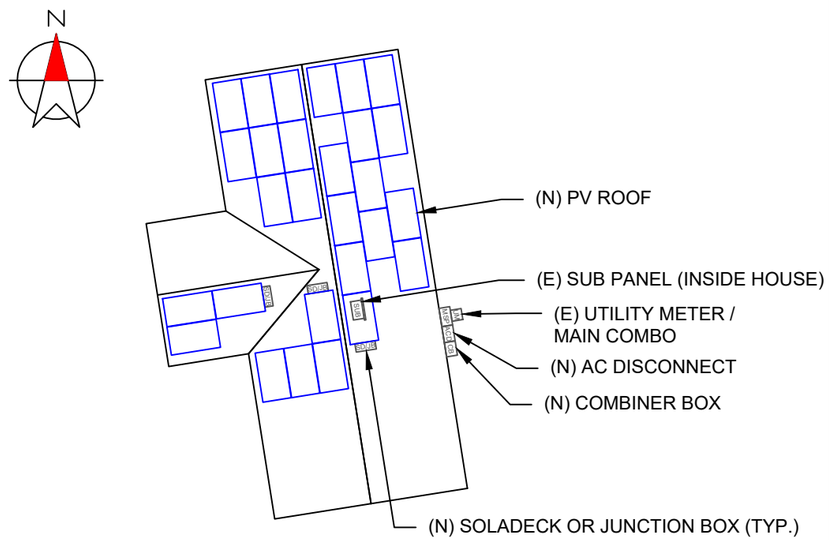


20 PINE NEEDLES DR,LILLINGTON, NC 27546

DIRECTORY

PERMANENT PLAQUE OR DIRECTORY PROVIDING THE LOCATION OF THE SERVICE DISCONNECTING MEANS AND THE PHOTOVOLTAIC SYSTEM.

(ALL PLAQUES AND SIGNAGE WILL BE INSTALLED AS OUTLINED WITHIN: NEC 690.56(B)&(C), [NEC 705.10])

LABELING DIAGRAM:

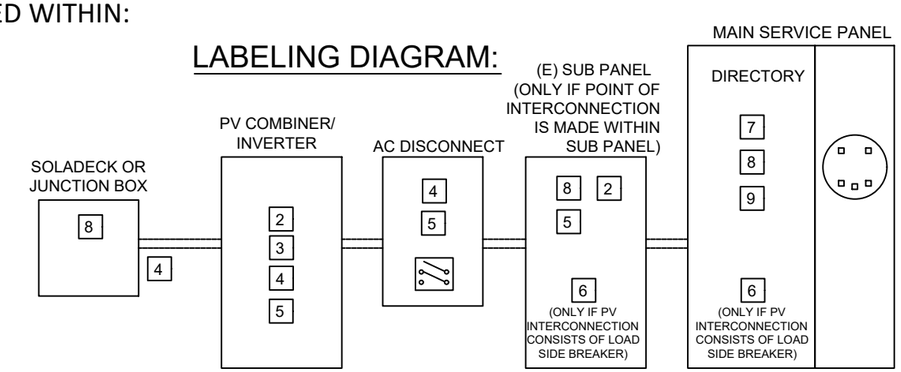


** ELECTRICAL DIAGRAM SHOWN ABOVE IS FOR LABELING PURPOSES ONLY. NOT AN ACTUAL REPRESENATION OF EQUIPMENT AND CONNECTIONS TO BE INSTALLED. LABEL LOCATIONS PRESENTED MAY VERY DEPENDING ON TYPE OF INTERCONNECTION METHOD AND LOCATION PRESENTED ELECTRICAL DIAGRAM PAGE. **

LABELING NOTES:

1. LABELS CALLED OUT ACCORDING TO ALL COMMON CONFIGURATIONS. ELECTRICIAN TO DETERMINE EXACT REQUIREMENTS IN THE FIELD PER CURRENT NEC AND LOCAL CODES AND MAKE APPROPRIATE ADJUSTMENTS.
2. LABELING REQUIREMENTS BASED ON THE 2017 NATIONAL ELECTRIC CODE, OSHA STANDARD 19010.145, ANSI Z535.
3. MATERIAL BASED ON THE REQUIREMENTS OF THE AUTHORITY HAVING JURISDICTION.
4. LABELS TO BE OF SUFFICIENT DURABILITY TO WITHSTAND THE ENVIRONMENT INVOLVED [NEC 110.21]
5. LABELS TO BE A MINIMUM LETTER HEIGHT OF 3/8", WHITE ON RED BACKGROUND; REFLECTIVE, AND PERMANENTLY AFFIXED [IFC 605.11.1.1]


SIGORA SOLAR

SIGORA SOLAR LLC
490 WESTFIELD RD STE A
CHARLOTTESVILLE, VA 22901


REVISIONS

| DESCRIPTION | DATE | REV |
|---|---|---|
| INITIAL | 06/21/2021 | |
| | | |
| | | |
| | | |
| | | |
| | | |

DATE:06/21/2021

PROJECT NAME & ADDRESS

WILBERT STATON RESIDENCE

20 PINE NEEDLES DR, LILLINGTON, NC 27546

DRAWN BY

ESR

SHEET NAME

PLACARD

SHEET SIZE

ANSI B
11" X 17"

SHEET NUMBER

PV-5

# MICRO INVERTER CHART

| | 1-10 | 11-20 | 21-30 | 31-40 | 41-50 | 51-60 | 61-70 |
|---|---|---|---|---|---|---|---|
| 1 | | | | | | | |
| 2 | | | | | | | |
| 3 | | | | | | | |
| 4 | | | | | | | |
| 5 | | | | | | | |
| 6 | | | | | | | |
| 7 | | | | | | | |
| 8 | | | | | | | |
| 9 | | | | | | | |
| 10 | | | | | | | |

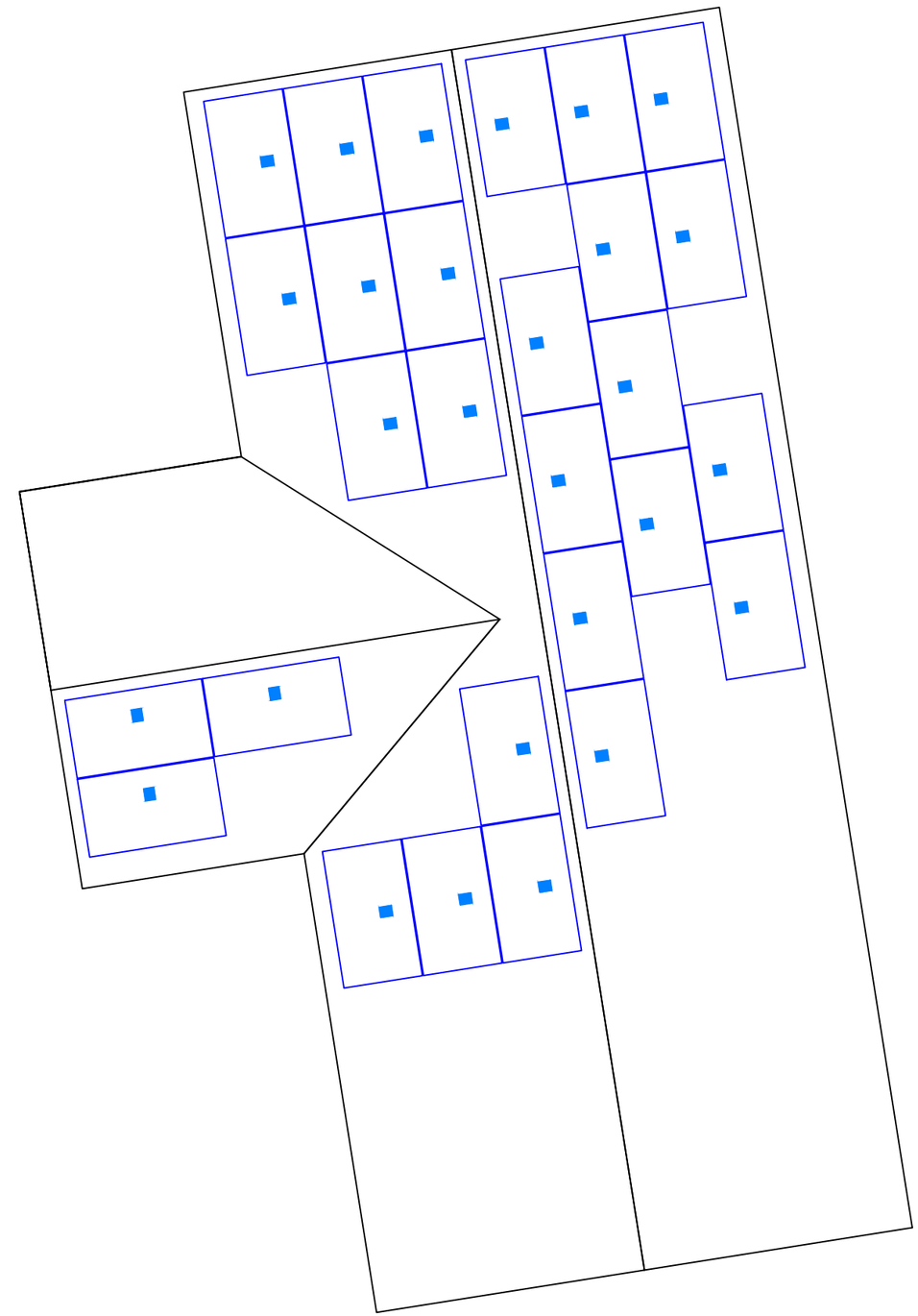


SIGORA SOLAR

SIGORA SOLAR LLC
490 WESTFIELD RD STE A
CHARLOTTESVILLE, VA 22901


REVISIONS

| DESCRIPTION | DATE | REV |
|---|---|---|
| INITIAL | 06/21/2021 | |
| | | |
| | | |
| | | |
| | | |
| | | |

DATE:06/21/2021

PROJECT NAME & ADDRESS

WILBERT STATON RESIDENCE

20 PINE NEEDLES DR,
LILLINGTON, NC 27546

DRAWN BY

ESR

SHEET NAME

MICRO INVERTER CHART

SHEET SIZE

ANSI B
11" X 17"

SHEET NUMBER

PV-6

# REC ALPHA BLACK SERIES

## PRODUCT DATASHEET

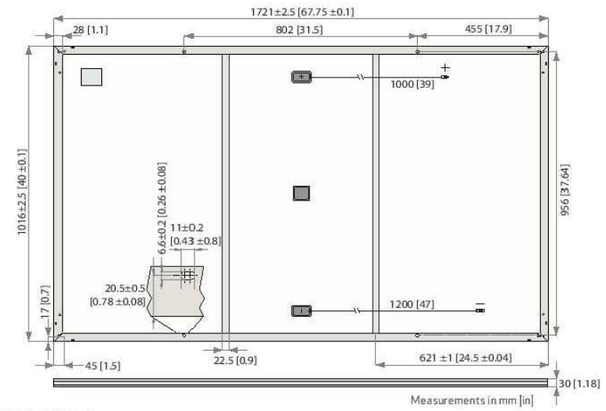


### GENERAL DATA

| | | | |
|---|---|---|---|
| Cell type: | 120 half-cut cells with REC heterojunction cell technology 6 strings of 20 cells in series | Junction box: | 3-part, 3 bypass diodes, IP67 rated in accordance with IEC 62790 |
| Glass: | 3.2 mm solar glass with anti-reflection surface treatment | Cable: | 4 mm² solar cable, 1.0 m + 1.2 m in accordance with EN 50618 |
| Backsheet: | Highly resistant polymeric construction | Connectors: | StäubliMC4PV-KBT4/KST4 (4 mm²) in accordance with IEC 62852 IP68 only when connected |
| Frame: | Anodized aluminum (black) | Origin: | Made in Singapore |

### ELECTRICAL DATA @ STC

Product Code*: RECxxxAA Black

| | | | | | |
|---|---|---|---|---|---|
| Nominal Power - $P_{MPP}$ (Wp) | 355 | 360 | 365 | 370 | 375 |
| Watt Class Sorting - (W) | -0/+5 | -0/+5 | -0/+5 | -0/+5 | -0/+5 |
| Nominal Power Voltage - $V_{MPP}$ (V) | 37.4 | 37.7 | 38.0 | 38.3 | 38.7 |
| Nominal Power Current - $I_{MPP}$ (A) | 9.50 | 9.55 | 9.60 | 9.66 | 9.72 |
| Open Circuit Voltage - $V_{OC}$ (V) | 44.0 | 44.1 | 44.3 | 44.5 | 44.6 |
| Short Circuit Current - $I_{SC}$ (A) | 10.19 | 10.23 | 10.26 | 10.30 | 10.40 |
| Panel Efficiency (%) | 20.3 | 20.6 | 20.9 | 21.2 | 21.4 |

Values at standard test conditions (STC: air mass AM 1.5, irradiance 1000 W/m², temperature 25°C), based on a production spread with a tolerance of $V_{OC}$ & $I_{SC}$ ±3% within one watt class. * Where xxx indicates the nominal power class ($P_{MPP}$) at STC above.

### ELECTRICAL DATA @ NMOT

Product Code*: RECxxxAA Black

| | | | | | |
|---|---|---|---|---|---|
| Nominal Power - $P_{MPP}$ (Wp) | 270 | 274 | 278 | 282 | 286 |
| Nominal Power Voltage - $V_{MPP}$ (V) | 35.2 | 35.5 | 35.8 | 36.1 | 36.4 |
| Nominal Power Current - $I_{MPP}$ (A) | 7.67 | 7.71 | 7.76 | 7.80 | 7.85 |
| Open Circuit Voltage - $V_{OC}$ (V) | 41.4 | 41.6 | 41.7 | 41.9 | 42.0 |
| Short Circuit Current - $I_{SC}$ (A) | 8.23 | 8.26 | 8.29 | 8.32 | 8.40 |

Nominal module operating temperature (NMOT: air mass AM 1.5, irradiance 800 W/m², temperature 20°C, windspeed 1 m/s).
* Where xxx indicates the nominal power class ($P_{MPP}$) at STC above.

### CERTIFICATIONS

| | |
|---|---|
| IEC 61215:2016, IEC 61730:2016, UL 1703, UL 61730 | |
| IEC 62804 | PID |
| IEC 61701 | Salt Mist |
| IEC 62716 | Ammonia Resistance |
| ISO 11925-2 | Ignitability (Class E) |
| UNI 8457/9174 | Ignitability (Class 1) |
| IEC 62782 | Dynamic Mechanical Load |
| IEC 61215-2:2016 | Hailstone (35mm) |
| AS4040.2 NCC 2016 | Cyclic Wind Load |
| ISO 14001:2004, ISO 9001:2015, OHSAS 18001:2007 | |

take-e-way WEEE-compliant recycling scheme

### WARRANTY

20 year product warranty
25 year linear power output warranty
Maximum annual power degression of 0.25% p.a.
Guarantees 92% of power after 25 years
See warranty conditions for further details.

### MECHANICAL DATA

| | |
|---|---|
| Dimensions: | 1721 x 1016 x 30 mm |
| Area: | 1,75 m² |
| Weight: | 19,5 kg |

### MAXIMUM RATINGS

| | |
|---|---|
| Operational temperature: | -40 ... +85°C |
| Maximum system voltage: | 1000 V |
| Design load (+): snow<br>Maximum test load (+): | 4666 Pa (475 kg/m²)*<br>7000 Pa (713 kg/m²)** |
| Design load (-): wind<br>Maximum test load (-): | 2666 Pa (272 kg/m²)*<br>4000 Pa (407 kg/m²)** |
| Max series fuse rating: | 25 A |
| Max reverse current: | 25 A |

* Calculated using a safety factor of 1.5
** See installation manual for mounting instructions

### TEMPERATURE RATINGS*

| | |
|---|---|
| Nominal Module Operating Temperature: | 44°C (±2°C) |
| Temperature coefficient of $P_{MPP}$: | -0.26 %/°C |
| Temperature coefficient of $V_{OC}$: | -0.24 %/°C |
| Temperature coefficient of $I_{SC}$: | 0.04 %/°C |

*The temperature coefficients stated are linear values

### LOW LIGHT BEHAVIOUR

Typical low irradiance performance of module at STC:

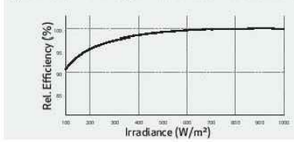


Specifications subject to change without notice.

Ref: PM-DS-12-01-Rev-B 08.19

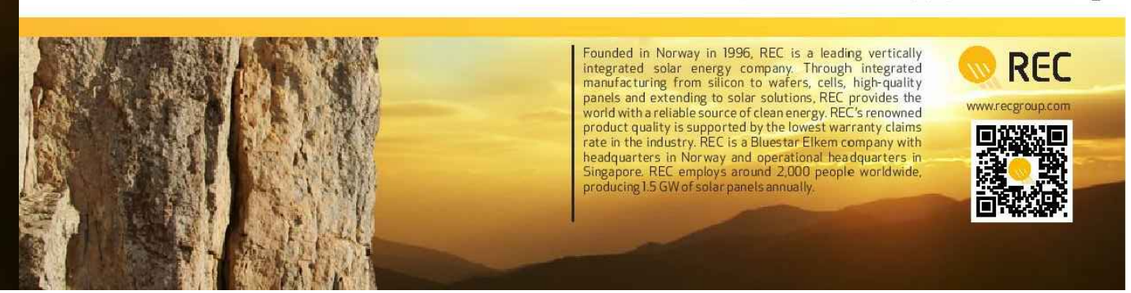

Founded in Norway in 1996, REC is a leading vertically integrated solar energy company. Through integrated manufacturing from silicon to wafers, cells, high-quality panels and extending to solar solutions, REC provides the world with a reliable source of clean energy. REC's renowned product quality is supported by the lowest warranty claims rate in the industry. REC is a Bluestar Elkem company with headquarters in Norway and operational headquarters in Singapore. REC employs around 2,000 people worldwide, producing 1.5 GW of solar panels annually.

REC
www.recgroup.com

SIGORA SOLAR

SIGORA SOLAR LLC
490 WESTFIELD RD STE A
CHARLOTTESVILLE, VA 22901

| REVISIONS | | |
|---|---|---|
| DESCRIPTION | DATE | REV |
| INITIAL | 06/21/2021 | |
| | | |
| | | |
| | | |
| | | |
| | | |

DATE:06/21/2021

PROJECT NAME & ADDRESS

WILBERT STATON RESIDENCE

20 PINE NEEDLES DR,
LILLINGTON, NC 27546

DRAWN BY
ESR

SHEET NAME
MODULE SPECIFICATION

SHEET SIZE
ANSI B
11" X 17"

SHEET NUMBER
PV-7

Data Sheet
Enphase Microinverters
Region: AMERICAS

# Enphase IQ 7 and IQ 7+ Microinverters

The high-powered smart grid-ready **Enphase IQ 7 Micro™** and **Enphase IQ 7+ Micro™** dramatically simplify the installation process while achieving the highest system efficiency.

Part of the Enphase IQ System, the IQ 7 and IQ 7+ Microinverters integrate with the Enphase IQ Envoy™, Enphase IQ Battery™, and the Enphase Enlighten™ monitoring and analysis software.

IQ Series Microinverters extend the reliability standards set forth by previous generations and undergo over a million hours of power-on testing, enabling Enphase to provide an industry-leading warranty of up to 25 years.

## Easy to Install

- Lightweight and simple
- Faster installation with improved, lighter two-wire cabling
- Built-in rapid shutdown compliant (NEC 2014 & 2017)

## Productive and Reliable

- Optimized for high powered 60-cell and 72-cell* modules
- More than a million hours of testing
- Class II double-insulated enclosure
- UL listed

## Smart Grid Ready

- Complies with advanced grid support, voltage and frequency ride-through requirements
- Remotely updates to respond to changing grid requirements
- Configurable for varying grid profiles
- Meets CA Rule 21 (UL 1741-SA)

* The IQ 7+ Micro is required to support 72-cell modules.

UL CERTIFIED SAFETY US-CA E341165

To learn more about Enphase offerings, visit **enphase.com**

ENPHASE.

## Enphase IQ 7 and IQ 7+ Microinverters

| INPUT DATA (DC) | IQ7-60-2-US | | IQ7PLUS-72-2-US | |
|---|---|---|---|---|
| Commonly used module pairings[1] | 235 W - 350 W + | | 235 W - 440 W + | |
| Module compatibility | 60-cell PV modules only | | 60-cell and 72-cell PV modules | |
| Maximum input DC voltage | 48 V | | 60 V | |
| Peak power tracking voltage | 27 V - 37 V | | 27 V - 45 V | |
| Operating range | 16 V - 48 V | | 16 V - 60 V | |
| Min/Max start voltage | 22 V / 48 V | | 22 V / 60 V | |
| Max DC short circuit current (module Isc) | 15 A | | 15 A | |
| Overvoltage class DC port | II | | II | |
| DC port backfeed current | 0 A | | 0 A | |
| PV array configuration | 1 x 1 ungrounded array; No additional DC side protection required; AC side protection requires max 20A per branch circuit | | | |
| **OUTPUT DATA (AC)** | **IQ 7 Microinverter** | | **IQ 7+ Microinverter** | |
| Peak output power | 250 VA | | 295 VA | |
| Maximum continuous output power | 240 VA | | 290 VA | |
| Nominal (L-L) voltage/range[2] | 240 V / 211-264 V | 208 V / 183-229 V | 240 V / 211-264 V | 208 V / 183-229 V |
| Maximum continuous output current | 1.0 A (240 V) | 1.15 A (208 V) | 1.21 A (240 V) | 1.39 A (208 V) |
| Nominal frequency | 60 Hz | | 60 Hz | |
| Extended frequency range | 47 - 68 Hz | | 47 - 68 Hz | |
| AC short circuit fault current over 3 cycles | 5.8 Arms | | 5.8 Arms | |
| Maximum units per 20 A (L-L) branch circuit[3] | 16 (240 VAC) | 13 (208 VAC) | 13 (240 VAC) | 11 (208 VAC) |
| Overvoltage class AC port | III | | III | |
| AC port backfeed current | 0 A | | 0 A | |
| Power factor setting | 1.0 | | 1.0 | |
| Power factor (adjustable) | 0.85 leading ... 0.85 lagging | | 0.85 leading ... 0.85 lagging | |
| **EFFICIENCY** | **@240 V** | **@208 V** | **@240 V** | **@208 V** |
| Peak efficiency | 97.6 % | 97.6 % | 97.5 % | 97.3 % |
| CEC weighted efficiency | 97.0 % | 97.0 % | 97.0 % | 97.0 % |
| **MECHANICAL DATA** | | | | |
| Ambient temperature range | -40ºC to +65ºC | | | |
| Relative humidity range | 4% to 100% (condensing) | | | |
| Connector type (IQ7-60-2-US & IQ7PLUS-72-2-US) | MC4 (or Amphenol H4 UTX with additional Q-DCC-5 adapter) | | | |
| Dimensions (WxHxD) | 212 mm x 175 mm x 30.2 mm (without bracket) | | | |
| Weight | 1.08 kg (2.38 lbs) | | | |
| Cooling | Natural convection - No fans | | | |
| Approved for wet locations | Yes | | | |
| Pollution degree | PD3 | | | |
| Enclosure | Class II double-insulated, corrosion resistant polymeric enclosure | | | |
| Environmental category / UV exposure rating | NEMA Type 6 / outdoor | | | |
| **FEATURES** | | | | |
| Communication | Power Line Communication (PLC) | | | |
| Monitoring | Enlighten Manager and MyEnlighten monitoring options. Both options require installation of an Enphase IQ Envoy. | | | |
| Disconnecting means | The AC and DC connectors have been evaluated and approved by UL for use as the load-break disconnect required by NEC 690. | | | |
| Compliance | CA Rule 21 (UL 1741-SA) UL 62109-1, UL1741/IEEE1547, FCC Part 15 Class B, ICES-0003 Class B, CAN/CSA-C22.2 NO. 107.1-01 This product is UL Listed as PV Rapid Shut Down Equipment and conforms with NEC-2014 and NEC-2017 section 690.12 and C22.1-2015 Rule 64-218 Rapid Shutdown of PV Systems, for AC and DC conductors, when installed according manufacturer's instructions. | | | |

1. No enforced DC/AC ratio. See the compatibility calculator at https://enphase.com/en-us/support/module-compatibility.
2. Nominal voltage range can be extended beyond nominal if required by the utility.
3. Limits may vary. Refer to local requirements to define the number of microinverters per branch in your area.

To learn more about Enphase offerings, visit **enphase.com**

ENPHASE.

© 2019 Enphase Energy. All rights reserved. All trademarks or brands used are the property of Enphase Energy, Inc.
2019-3-26

SIGORA SOLAR

SIGORA SOLAR LLC
490 WESTFIELD RD STE A
CHARLOTTESVILLE, VA 22901

REVISIONS

| DESCRIPTION | DATE | REV |
|---|---|---|
| INITIAL | 06/21/2021 | |
| | | |
| | | |
| | | |
| | | |
| | | |

DATE:06/21/2021

PROJECT NAME & ADDRESS

WILBERT STATON RESIDENCE

20 PINE NEEDLES DR, LILLINGTON, NC 27546

DRAWN BY
ESR

SHEET NAME
INVERTER SPECIFICATION

SHEET SIZE
ANSI B
11" X 17"

SHEET NUMBER
PV-8

Data Sheet
Enphase Networking

# Enphase IQ Combiner 3

(X-IQ-AM1-240-3)

The **Enphase IQ Combiner 3™** with Enphase IQ Envoy™ consolidates interconnection equipment into a single enclosure and streamlines PV and storage installations by providing a consistent, pre-wired solution for residential applications. It offers up to four 2-pole input circuits and Eaton BR series busbar assembly.

## Smart

- Includes IQ Envoy for communication and control
- Flexible networking supports Wi-Fi, Ethernet, or cellular
- Optional AC receptacle available for PLC bridge
- Provides production metering and optional consumption monitoring

## Simple

- Reduced size from previous combiner
- Centered mounting brackets support single stud mounting
- Supports back and side conduit entry
- Up to four 2-pole branch circuits for 240 VAC plug-in breakers (not included)
- 80 A total PV or storage branch circuits

## Reliable

- Durable NRTL-certified NEMA type 3R enclosure
- Five-year warranty
- UL listed

LISTED

To learn more about Enphase offerings, visit **enphase.com**

ENPHASE.

## Enphase IQ Combiner 3

| | |
|---|---|
| **MODEL NUMBER** | |
| IQ Combiner 3 X-IQ-AM1-240-3 | IQ Combiner 3 with Enphase IQ Envoy™ printed circuit board for integrated revenue grade PV production metering (ANSI C12.20 +/- 0.5%) and optional* consumption monitoring (+/- 2.5%). |
| **ACCESSORIES** and **REPLACEMENT PARTS** (not included, order separately) | |
| Enphase Mobile Connect™<br>CELLMODEM-03 (4G / 12-year data plan)<br>CELLMODEM-01 (3G / 5-year data plan)<br>CELLMODEM-M1 (4G based LTE-M / 5-year data plan) | Plug and play industrial grade cellular modem with data plan for systems up to 60 microinverters. (Available in the US, Canada, Mexico, Puerto Rico, and the US Virgin Islands, where there is adequate cellular service in the installation area.) |
| Consumption Monitoring* CT<br>CT-200-SPLIT | Split core current transformers enable whole home consumption metering (+/- 2.5%). |
| Circuit Breakers<br>BRK-10A-2-240<br>BRK-15A-2-240<br>BRK-20A-2P-240 | Supports Eaton BR210, BR215, BR220, BR230, BR240, BR250, and BR260 circuit breakers.<br>Circuit breaker, 2 pole, 10A, Eaton BR210<br>Circuit breaker, 2 pole, 15A, Eaton BR215<br>Circuit breaker, 2 pole, 20A, Eaton BR220 |
| EPLC-01 | Power line carrier (communication bridge pair), quantity 2 |
| XA-PLUG-120-3 | Accessory receptacle for Power Line Carrier in IQ Combiner 3 (required for EPLC-01) |
| XA-ENV-PCBA-3 | Replacement IQ Envoy printed circuit board (PCB) for Combiner 3 |
| **ELECTRICAL SPECIFICATIONS** | |
| Rating | Continuous duty |
| System voltage | 120/240 VAC, 60 Hz |
| Eaton BR series busbar rating | 125 A |
| Max. continuous current rating (output to grid) | 65 A |
| Max. fuse/circuit rating (output) | 90 A |
| Branch circuits (solar and/or storage) | Up to four 2-pole Eaton BR series Distributed Generation (DG) breakers only (not included) |
| Max. continuous current rating (input from PV) | 64 A |
| Max. total branch circuit breaker rating (input) | 80A of distributed generation / 90A with IQ Envoy breaker included |
| Production Metering CT | 200 A solid core pre-installed and wired to IQ Envoy |
| **MECHANICAL DATA** | |
| Dimensions (WxHxD) | 49.5 x 37.5 x 16.8 cm (19.5" x 14.75" x 6.63"). Height is 21.06" (53.5 cm with mounting brackets). |
| Weight | 7.5 kg (16.5 lbs) |
| Ambient temperature range | -40° C to +46° C (-40° to 115° F) |
| Cooling | Natural convection, plus heat shield |
| Enclosure environmental rating | Outdoor, NRTL-certified, NEMA type 3R, polycarbonate construction |
| Wire sizes | • 20 A to 50 A breaker inputs: 14 to 4 AWG copper conductors<br>• 60 A breaker branch input: 4 to 1/0 AWG copper conductors<br>• Main lug combined output: 10 to 2/0 AWG copper conductors<br>• Neutral and ground: 14 to 1/0 copper conductors<br>Always follow local code requirements for conductor sizing. |
| Altitude | To 2000 meters (6,560 feet) |
| **INTERNET CONNECTION OPTIONS** | |
| Integrated Wi-Fi | 802.11b/g/n |
| Ethernet | Optional, 802.3, Cat5E (or Cat 6) UTP Ethernet cable (not included) |
| Cellular | Optional, CELLMODEM-01 (3G) or CELLMODEM-03 (4G) or CELLMODEM-M1 (4G based LTE-M) (not included) |
| **COMPLIANCE** | |
| Compliance, Combiner | UL 1741<br>CAN/CSA C22.2 No. 107.1<br>47 CFR, Part 15, Class B, ICES 003<br>Production metering: ANSI C12.20 accuracy class 0.5 (PV production) |
| Compliance, IQ Envoy | UL 60601-1/CANCSA 22.2 No. 61010-1 |

* Consumption monitoring is required for Enphase Storage Systems.

To learn more about Enphase offerings, visit **enphase.com**

© 2018 Enphase Energy. All rights reserved. All trademarks or brands in this document are registered by their respective owner.
2018-09-13

ENPHASE.

SIGORA SOLAR

SIGORA SOLAR LLC
490 WESTFIELD RD STE A
CHARLOTTESVILLE, VA 22901

| REVISIONS | | |
|---|---|---|
| DESCRIPTION | DATE | REV |
| INITIAL | 06/21/2021 | |
| | | |
| | | |
| | | |
| | | |
| | | |

DATE:06/21/2021

PROJECT NAME & ADDRESS

WILBERT STATON RESIDENCE

20 PINE NEEDLES DR,
LILLINGTON, NC 27546

DRAWN BY

ESR

SHEET NAME

COMBINER SPECIFICATION

SHEET SIZE

ANSI B
11" X 17"

SHEET NUMBER

PV-9

| DESCRIPTION: | DRAWN BY: | SnapNrack™ Solar Mounting Solutions |
|---|---|---|
| SNAPNRACK, UR-40 RAIL | mwatkins | |
| PART NUMBER(S): | REVISION: | |
| 232-02449, 232-02450, 232-02451 | B | 595 MARKET STREET, 29TH FLOOR • SAN FRANCISCO, CA 94105 USA. PHONE (415) 580-6900 • FAX (415) 580-6902 |

THE INFORMATION IN THIS DRAWING IS CONFIDENTIAL AND PROPRIETARY. ANY REPRODUCTION, DISCLOSURE, OR USE THEREOF IS PROHIBITED WITHOUT THE WRITTEN CONSENT OF SUNRUN SOUTH LLC.

| UR-40 RAIL PROPERTIES | |
|---|---|
| SKU | FINISH |
| 232-02449 | MILL |
| 232-02450 | CLEAR |
| 232-02451 | BLACK |

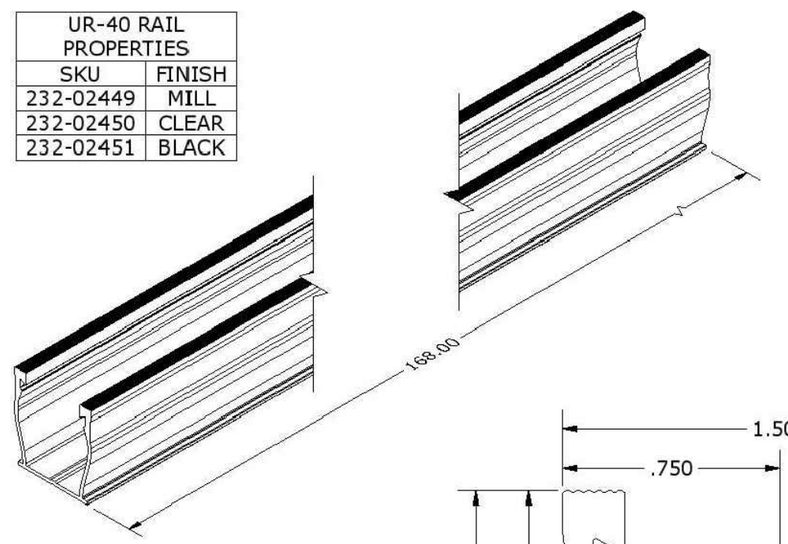


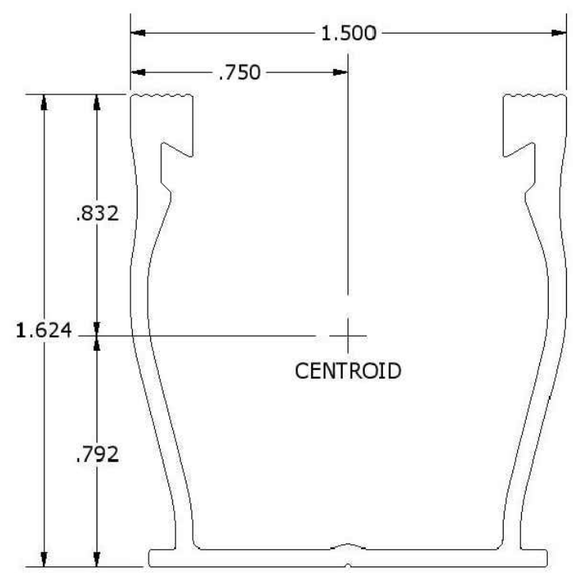


| SECTION PROPERTIES | |
|---|---|
| A | 0.357 in² |
| Ixx | 0.125 in⁴ |
| Iyy | 0.132 in⁴ |
| Sx (TOP) | 0.150 in³ |
| Sx (BOT) | 0.158 in³ |
| Sy (LEFT) | 0.175 in³ |
| Sy (RIGHT) | 0.175 in³ |

ALL DIMENSIONS IN INCHES

| | | |
|---|---|---|
| MATERIALS: | 6000 SERIES ALUMINUM | OPTIONS: |
| DESIGN LOAD (LBS): | N/A | CLEAR / BLACK ANODIZED |
| ULTIMATE LOAD (LBS): | N/A | MILL FINISH |
| TORQUE SPECIFICATION: | N/A LB-FT | BUNDLES OF 144 |
| CERTIFICATION: | UL 2703, FILE E359313 | BOXES OF 8 |
| WEIGHT (LBS): | 5.85 | |

SIGORA SOLAR

SIGORA SOLAR LLC
490 WESTFIELD RD STE A
CHARLOTTESVILLE, VA 22901

REVISIONS

| DESCRIPTION | DATE | REV |
|---|---|---|
| INITIAL | 06/21/2021 | |
| | | |
| | | |
| | | |
| | | |
| | | |

DATE:06/21/2021

PROJECT NAME & ADDRESS

WILBERT STATON RESIDENCE

20 PINE NEEDLES DR,
LILLINGTON, NC 27546

DRAWN BY

ESR

SHEET NAME

RAIL SPECIFICATION

SHEET SIZE

ANSI B
11" X 17"

SHEET NUMBER

PV-10

# S-5!®

## The Right Way!

### VersaBracket™

VersaBracket™ can be used to mount almost anything to an exposed-fastened roof system and is compatible with almost any trapezoidal exposed-fastened profile. No messy sealants to apply! No chance for leaks! The VersaBracket comes with factory-applied butyl sealant already in the base, and the S-5!® patented reservoir conceals the sealant from UV exposure, preventing drying and cracks.

Installation is simple! VersaBracket is mounted in the flat of the panel, directly into the supporting structure of the roof, i.e. wood decking, wood or steel purlins or trusses. No surface preparation is necessary; simply wipe away excess oil and debris, peel the release paper from the base, align, and apply. Secure through the pre-punched holes using the appropriate screws for the supporting structure.

VersaBracket is so strong, it will even support heavy-duty applications like snow retention. For exposed-fastened trapezoidal profiles, the VersaBracket is the perfect match for our ColorGard® snow retention systems (for corrugated roofs use CorruBracket™). VersaBracket is extremely economical and facilitates quick and easy installation.

**The right way to attach almost anything to metal roofs!**

1

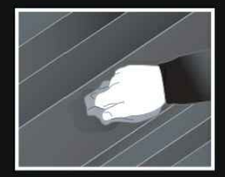

2

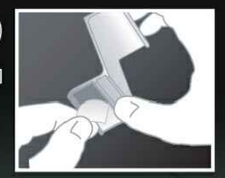

3

VersaBracket™

**S-5!® VersaBracket™ is the right way to attach almost anything to exposed-fastened roof profiles, including PV through rail methods.**

**888-825-3432 | www.S-5.com**

# S-5!®

## The Right Way!

**VersaBracket™ can be used for almost any attachment need, including S-5!® ColorGard®, on all types of exposed-fastened metal roofing. No messy sealants to apply. The factory-applied butyl sealant waterproofs and makes installation a snap!**

To accommodate various rib heights, **VersaBracket™** comes in two heights—the 2.65" VersaBracket-67™ and the 1.86" VersaBracket-47™. The VersaBracket-67 mounting face has no holes or slots; thus, ancillary items are typically secured using self-tapping screws. The VersaBracket-47 comes with a 1" slot on top as the standard part. Other hole and slot configurations available with minimum purchase requirements (contact your distributor for available configurations). Each VersaBracket comes with factory-applied butyl sealant in the base. A structural aluminum attachment bracket, VersaBracket is compatible with most common metal roofing materials. For design assistance, ask your distributor, or use our web-based calculator at **www.S-5.com** for job-specific system engineering and design of your next snow retention project. Also, please visit our website for more information including CAD details, metallurgical compatibilities, and specifications.

The VersaBracket has been tested for load-to-failure results on wood decking, metal, and wood purlins. The independent lab test data found at www.S-5.com can be used for load-critical designs and applications. S-5!® holding strength is unmatched in the industry.

### Example Profile

### Example Applications

ColorGard

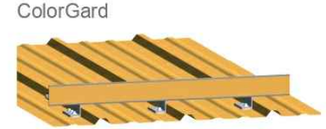

### VersaBracket-67™

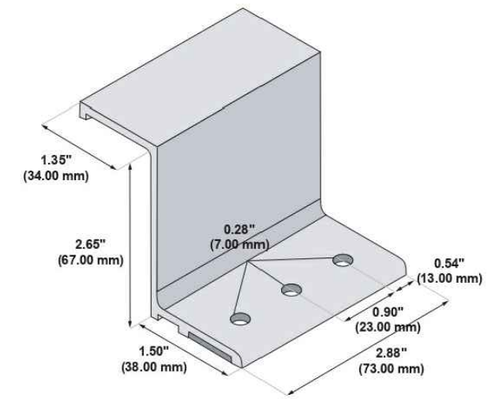


### VersaBracket-47™

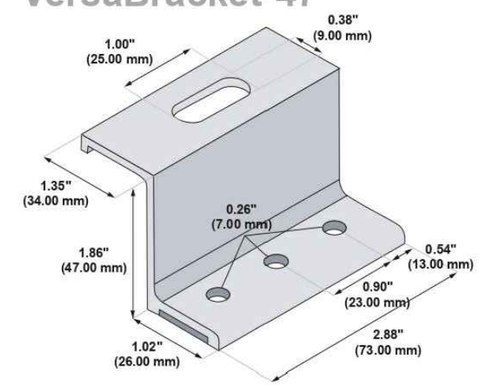


**3 holes are provided for versatility. Some installations require only 2 fasteners. See the load table on the S-5! website and the installation instructions for more details.**

**Due to varied applications, mounting hardware is not furnished with part.**

**Please note: All measurements are rounded to the second decimal place.**

**S-5!® Warning! Please use this product responsibly!**

**Products are protected by multiple U.S. and foreign patents. For published data regarding holding strength, bolt torque, patents and trademarks visit the S-5! website at www.S-5.com.**

Copyright 2013, Metal Roof Innovations, Ltd. S-5! products are patent protected.
S-5! aggressively protects its patents, trademarks, and copyrights. Version 112613.

Distributed by

SIGORA SOLAR

SIGORA SOLAR LLC
490 WESTFIELD RD STE A
CHARLOTTESVILLE, VA 22901

REVISIONS

| DESCRIPTION | DATE | REV |
|---|---|---|
| INITIAL | 06/21/2021 | |
| | | |
| | | |
| | | |
| | | |
| | | |

DATE:06/21/2021

PROJECT NAME & ADDRESS

WILBERT STATON RESIDENCE

20 PINE NEEDLES DR,
LILLINGTON, NC 27546

DRAWN BY

ESR

SHEET NAME

ATTACHMENT SPECIFICATION

SHEET SIZE

ANSI B
11" X 17"

SHEET NUMBER

PV-11