Technical Data

Phase	1 Phase
Voltage	115 Volts
Wattage	336 Watts
Capacity	23.1 cu. ft.
Compressor Location	Bottom Mounted
Door Type	Solid
Hinge Location	Right
Horsepower	1/4 HP
Individual Shelf Capacity	90 lb.
Installation Type	Freestanding
Material	Aluminum / Stainless Steel
Number of Doors	1 Doors
Number of Shelves	3 Shelves
Plug Type	NEMA 5-15P
Power Type	Electric
Refrigerant Type	R-290
Sections	1 Section
Temperature Range	32 - 40 Degrees F
Type	Refrigerators

⚠ **WARNING:** This product can expose you to chemicals including lead, which are known to the State of California to cause cancer, birth defects, or other reproductive harm. For more information, go to www.p65warnings.ca.gov.

Project _____

Item 541FF40N Quantity _____

Approval _____ Date _____

Main Street Equipment Natural Gas 40 lb. Stainless Steel Floor Fryer - 90,000 BTU

Item #541FF40N

Special Features

- All stainless steel tank, door, front, top, ledge, and header; galvanized steel sides
- Easy-to-use thermostat for accurate and adjustable temperature between 200-400 degrees Fahrenheit
- 40 lb. fry pot with an efficient and quiet 3 tube burner system and full port drain
- Two nickel chrome wire mesh fry baskets included
- Natural gas, 90,000 BTU

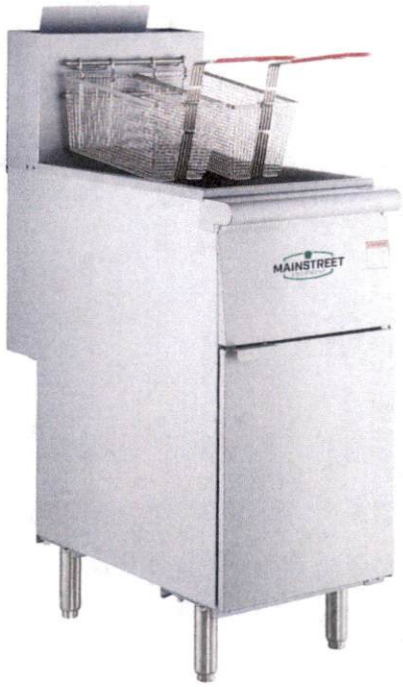

Technical Data

Width	15 1/2 Inches
Depth	30 1/4 Inches
Height	47 1/8 Inches
Fry Pot Width	14 Inches
Fry Pot Depth	13 3/4 Inches
Burner Style	Tube
Cabinet	Galvanized and Stainless Steel
Capacity	40 lb.
Compliances	Commonwealth of Massachusetts
Control Type	Millivolt

Certifications

ETL Sanitation

ETL US & Canada

3/4" Gas Connection

Technical Data

Gas Inlet Size	3/4 Inches
Number of Burners	3 Burners
Number of Fry Baskets	2 Fry Baskets
Number of Fry Pots	1 Fry Pot
Power Type	Natural Gas
Temperature Range	200 - 400 Degrees F
Temperature Settings	Adjustable
Total BTU	90000 BTU
Type	Gas Floor Fryers

Technical Drawing

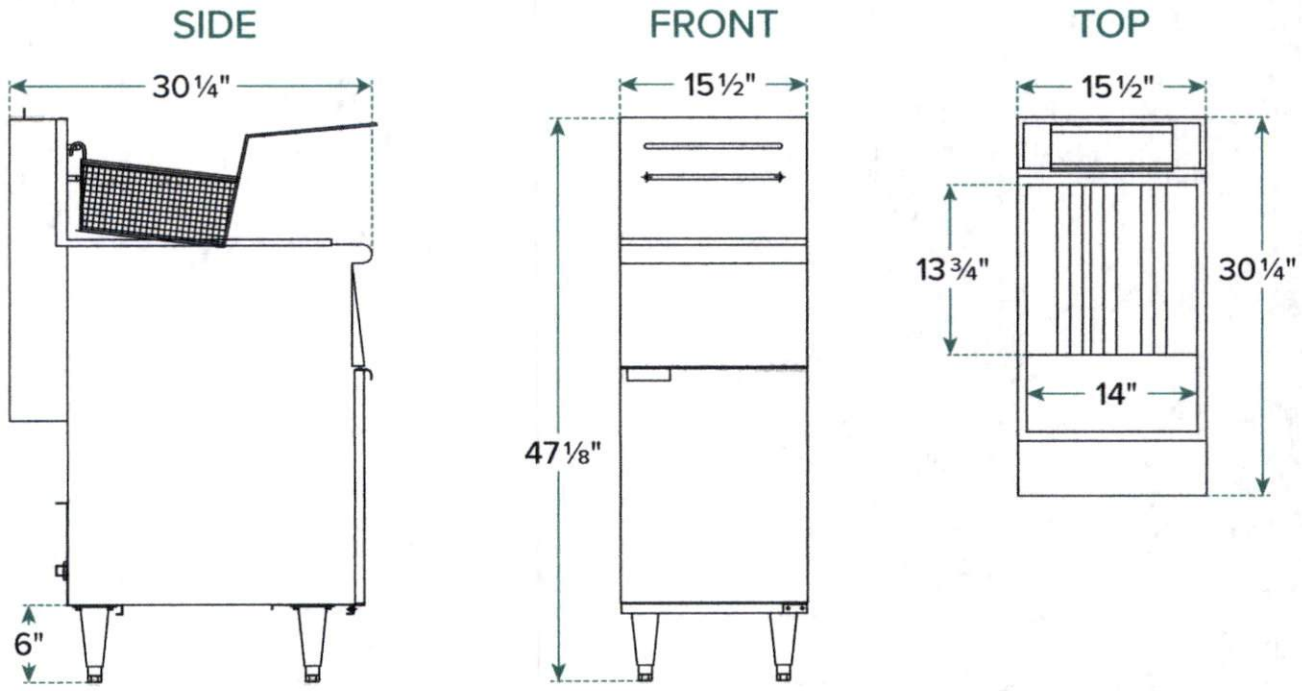

⚠ **WARNING:** This product can expose you to chemicals including lead, which are known to the State of California to cause cancer, birth defects, or other reproductive harm. For more information, go to www.p65warnings.ca.gov.

Item #: 178APT48MHC Project: _____

Qty: _____ Date: _____ Approval: _____

Avantco Refrigeration

Avantco APT-48M-HC 48" 2 Door Mega Top Refrigerated Sandwich Prep Table

Item #178APT48MHC

Technical Data

Width	46 3/4 Inches
Depth	35 Inches
Height	46 Inches
Cutting Board Width	47 Inches
Left Door Opening Width	19 3/8 Inches
Nominal Width	48 Inches
Right Door Opening Width	19 3/8 Inches
Cutting Board Depth	8 Inches
Work Surface Height	35 1/4 Inches
Amps	2.4 Amps

Features

- Stainless steel exterior and aluminum interior with 304 stainless steel floor
- Industry-best 3/4" cutting board is built-in for convenient prep space and removable for cleaning
- Digital control with auto defrost
- Mega top accommodates (18) 1/6 size, 6" deep food pans
- 115V; 1/2 hp; R-290 refrigerant; 2.4 Amps

Certifications

ETL Sanitation ETL US & Canada 5-15P

Avantco Refrigeration

Technical Data

Hertz	60 Hertz
Phase	1 Phase
Voltage	115 Volts
1/6 Size Pan Capacity	18 Pans
Access Type	Doors
BTU (LBP)	1285 BTU
Compressor Style	Side / Rear Breathing
Construction	Stainless Steel and Aluminum
Display Case Type	Refrigerated
Door Style	Swing
Door Type	Solid
Hinge Location	Left/Right
Horsepower	1/2 HP
Installation Type	Freestanding
Net Volume	13 cu. ft.
Number of Doors	2 Doors
Number of Shelves	2 Shelves
Plug Type	NEMA 5-15P
Refrigerant Type	R-290
Style	Counter Height
Temperature Range	33 - 40 Degrees F
Top Type	Mega Top
Type	Prep Refrigeration

Plan View

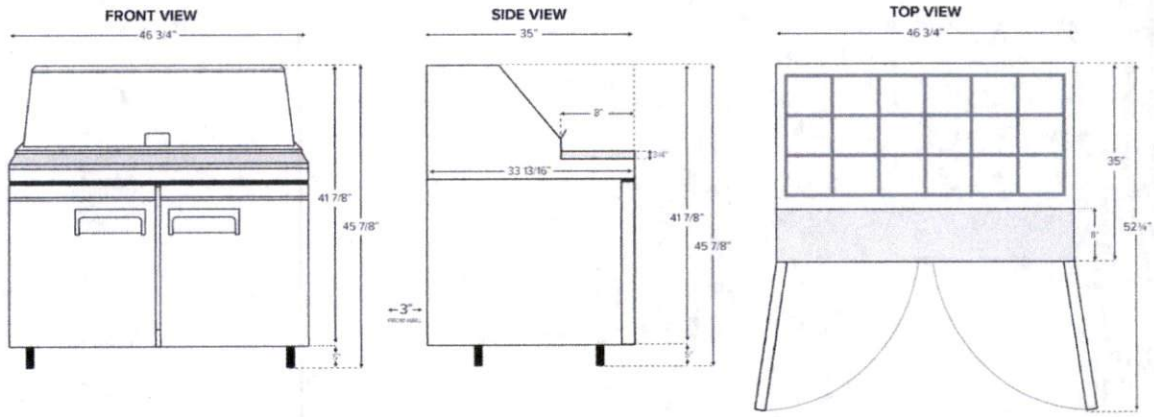

Notes & Details

Optimize your back-of-house operations with this Avantco APT-48M-HC 47" 2 door mega top stainless steel refrigerated sandwich prep table, which allows you to better keep up with customer demand. Whether used in a university, sub shop, or hospital, the unit will help streamline the sandwich prep process with its convenient features and capacity. Its top accommodates up to (18) 1/6 size food pans up to 6" deep (sold separately). These pans are great for holding common sandwich or salad toppings, from eggs and cheese to green pepper or ham. Plus, a lift-up lid encloses the top to maintain proper, food-safe temperatures.

A full-length cutting board, which is 8" deep, is mounted to the table surface, providing a place for slicing ingredients and assembling orders. The cutting board can even be removed for easy cleaning or swapped out with another board of your choosing. Beneath the workspace is additional storage space. Because it's refrigerated, the space is great for storing back-up ingredients, such as deli meat and cheese, as well as less-common toppings. Two epoxy-coated shelves are included, and each can accommodate up to 90 lb. of weight to help you with organizing your assorted supplies. Divider bars are also included for ultimate convenience.

High-quality performance is made possible by the unit's 1/2 hp refrigeration system, which maintains temperatures between 33 and 40 degrees Fahrenheit using R-290 refrigerant. This specialized refrigerant has an ozone depletion potential (ODP) of 0 and a global warming potential (GWP) of 3. You can control your unit freely using the built-in digital controls.

The construction of this unit is designed with commercial use in mind. It features a stainless steel exterior and an aluminum interior with a 304 stainless steel floor, which is fortified with foamed-in-place polyurethane insulation. The insulation also helps to promote proper temperature retention. For operation, the prep table requires a 115V electrical connection.

⚠ **WARNING:** This product can expose you to chemicals including lead, which are known to the State of California to cause cancer, birth defects, or other reproductive harm. For more information, go to www.p65warnings.ca.gov.

Avantco Refrigeration

Item #: 178SSPT71MC Project: _____

Qty: _____ Date: _____ Approval: _____

Avantco Refrigeration

Avantco SS-PT-71M-C 70" 3 Door Mega Top Stainless Steel Refrigerated Sandwich Prep Table with 11 1/2" Cutting Board

Item #178SSPT71MC

Technical Data

Width	70 3/8 Inches
Depth	37 1/2 Inches
Height	45 7/8 Inches
Cutting Board Width	70 3/8 Inches
Interior Width	66 1/2 Inches
Nominal Width	72 Inches
Cutting Board Depth	11 1/2 Inches
Interior Depth	23 3/4 Inches
Interior Height	23 1/2 Inches
Work Surface Height	35 1/4 Inches

Features

- Mega top accommodates (30) 1/6 size, 6" deep food pans (sold separately)
- Industry-best 3/4" thick, 11 1/2" deep cutting board adds 3 1/2" of additional workspace
- Digital control with auto defrost
- Stainless steel exterior and interior; foamed-in-place polyurethane insulation
- 115V; 2/3 hp compressor; R-290 refrigerant

Certifications

5-15P ETL Sanitation ETL US & Canada

Avantco Refrigeration

Technical Data

Amps	3.3 Amps
Hertz	60 Hertz
Phase	1 Phase
Voltage	115 Volts
1/6 Size Pan Capacity	30 Pans
Access Type	Doors
BTU (LBP)	2080 BTU
Capacity	18 cu. ft.
Casters	With Casters
Compressor Style	Side / Rear Breathing
Construction	Stainless Steel
Door Style	Swing
Door Type	Solid
Hinge Location	Left/Right
Horsepower	2/3 HP
Number of Doors	3 Doors
Number of Shelves	3 Shelves
Plug Type	NEMA 5-15P
Refrigerant Type	R-290
Style	Counter Height
Temperature Range	33 - 40 Degrees F
Top Type	Cutting Top Mega Top
Type	Prep Refrigeration

Notes & Details

Optimize your back-of-house operations with this Avantco SS-PT-71M-C 70" 3 door stainless steel mega top refrigerated sandwich prep table, and better keep up with customer demands. Whether used in a university, sub shop, or hospital, the unit is sure to help streamline the sandwich prep process with its convenient features and capacity. Its top, for instance, accommodates up to (30) 1/6 size food pans up to 6" deep (sold separately). These are great for holding common sandwich or salad toppings, from eggs and cheese to green pepper or ham. Plus, a lift-up lid encloses the top to maintain proper, food safe temperatures. A full-length cutting board, which is 3/4" thick and 11 1/2" deep, is mounted to the table surface, providing a place for slicing ingredients and assembling orders. This mega top, industry-best cutting board is removable for easy cleaning at the end of the day.

Beneath the workspace is additional storage space. Because it's refrigerated, the space is great for storing back-up ingredients, such as deli meat and cheese, as well as less common toppings. Three epoxy-coated shelves are included and can each accommodate up to 90 lb. of weight, helping to organize your assorted supplies.

High-quality performance is made possible by the unit's 2/3 hp refrigeration system, which maintains temperatures between 33 and 40 degrees Fahrenheit. It does this by circulating R-290 refrigerant. This specialized refrigerant has an ozone depletion potential (ODP) of 0 and a global warming potential (GWP) of 3.

The construction of this unit is designed with commercial use in mind. It features a 430 type stainless steel exterior and 304 type stainless steel interior, which are fortified with foamed-in-place polyurethane insulation. The insulation also helps to promote proper temperature retention. For operation, the prep table requires a 115V electrical connection.

⚠ **WARNING:** This product can expose you to chemicals including lead, which are known to the State of California to cause cancer, birth defects, or other reproductive harm. For more information, go to www.p65warnings.ca.gov.

Project: _____ Date: _____ Approval: _____ Qty: ____ Item #: 600TB3018G

Regency Tables & Sinks

REGENCY
Tables and Sinks

Regency 30" x 18" 18-Gauge 304 Stainless Steel Equipment Filler Table with Backsplash and Galvanized Undershelf

#600TB3018G

Technical Data

Length	18 Inches
Width	30 Inches
Height	38 Inches
Backsplash Height	4 Inches
Work Surface Height	34 Inches
Backsplash	With Backsplash
Base Style	Undershelf
Features	Customizable Height NSF Listed
Gauge	18 Gauge

Features

- 18-gauge type 304 stainless steel top shelf
- Galvanized steel undershelf and legs with adjustable plastic bullet feet
- Designed to fit in between two pieces of equipment
- 4" backsplash helps prevent spills
- Aluminum corner brackets on undershelf

Certifications

NSF Listed

Technical Data

Leg Construction	Galvanized Steel
Number of Legs	4 Legs
Size	30" x 18"
Stainless Steel Type	Type 304
Table Style	Undershelf
Tabletop Material	Stainless Steel
Top Capacity	420 lb.
Type	Filler Tables
Undershelf Capacity	300 lb.
Undershelf Construction	Galvanized Steel
Usage	Light Duty

Notes & Details

This stainless steel commercial 30" x 18" equipment filler table with a 4" high backsplash and undershelf is designed to help you maximize the space in your kitchen. The top shelf is made of durable and easy-to-clean 18-gauge type 304 stainless steel, offering excellent durability and a professional looking finish. With its thin footprint at just 30" in width, this table easily fits between kitchen equipment to provide important extra work space for food preparation, storage supplies, and other tasks within your business.

The work table's adjustable undershelf is constructed from 18-gauge galvanized steel and is further supported with aluminum corner brackets. A 4" high backsplash is included to help protect walls and contain items on the work top. The legs of this work table are 1 5/8" in diameter and are also made of galvanized steel, with plastic feet that are adjustable up to 1".

⚠ **WARNING:** This product can expose you to chemicals including Nickel and Lead, which are known to the State of California to cause cancer, birth defects, or other reproductive harm. For more information, go to www.p65warnings.ca.gov.

Item #: 177STE5S Project: _____

Qty: _____ Date: _____ Approval: _____

Avantco STE-5S Five Pan Open Well Electric Steam Table with Undershelf - 208/240V, 3750W

Item #177STE5S

Technical Data

Width	71 Inches
Depth	30 Inches
Height	34 Inches
Power Cord Length	4 9/16 Feet
Cutting Board Width	71 Inches
Cutting Board Depth	8 Inches
Hertz	60 Hertz
Voltage	208 - 240 Volts
Wattage	3750 Watts
Base Style	Undershelf

Features

- Medium-duty stainless steel and galvanized leg construction, ensuring durability and reliability
- 8" deep wells hold 5 full size food pans; accommodates various pan configurations for versatility
- Polyethylene 8" deep cutting board provides plenty of extra work space
- Convenient undershelf provides additional space for utensils, pans, or lids
- Independent infinite control knobs for optimum heating versatility

Certifications

6-30P ETL US

Avantco Equipment

Avantco Equipment

Technical Data

Casters	Without Casters
Color	Silver
Control Type	Infinite
Material	Stainless Steel / Galvanized Steel
Number of Pans	5 Pans
Number of Wells	5
Plug Type	NEMA 6-30P
Power Type	Electric
Style	Floor Model Heated
Top Material	Stainless Steel
Type	Stationary
Usage	Indoor
Well Type	Open / Dry Well

Notes & Details

Keep all of your menu items piping hot and readily available with the Avantco STE-5S five pan open well electric steam table with undershelf! This powerful holding unit can hold five full size food pans full of pasta, meat, or side dishes in each 750W well. This unit is constructed of medium-duty stainless steel with galvanized legs and 8" deep wells, ensuring the durability and reliability you need at your buffet or catered event.

Use the undershelf to store extra serving utensils, food pans, or lids to keep all of the tools you need close at hand. For extra convenience, the polyethylene 8" deep, 1/2" thick cutting board gives you a little extra work space for changing out food pans or filling plates. For optimum heating versatility, each individual well is independently controlled by an infinite control knob. Although intended for dry use, this steam table can be used wet with a compatible spillage pan (sold separately). A 208/240V electrical connection is required.

⚠ **WARNING:** This product can expose you to chemicals including lead, which are known to the State of California to cause cancer, birth defects, or other reproductive harm. For more information, go to www.p65warnings.ca.gov.

Project: _____ Date: _____ Approval: _____ Qty: ____ Item #: 600S317172G

Regency Tables & Sinks

REGENCY
Tables and Sinks

Regency 91" 16-Gauge Stainless Steel Three Compartment Commercial Sink with Galvanized Steel Legs and 2 Drainboards - 17" x 17" x 12" Bowls

#600S317172G

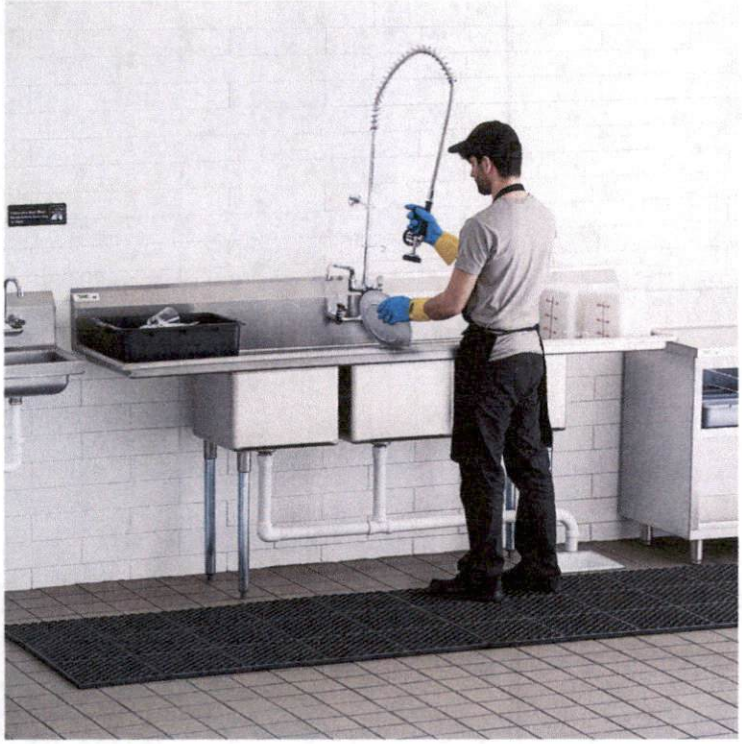

Technical Data

Length	91 Inches
Width	22 1/2 Inches
Height	44 3/4 Inches
Drainboard Length	18 Inches
Bowl Depth	12 Inches
Backsplash Height	8 1/4 Inches
Work Surface Height	36 1/2 Inches
Basket Drain Size	3 1/2 Inches
Bowl Front to Back	17 Inches
Bowl Left to Right	17 Inches

Features

- 16 gauge type 304 stainless steel sink with galvanized steel legs and adjustable plastic feet
- Designed with (3) 12" deep bowls and rounded corners for easy cleaning
- Galvanized steel legs with adjustable bullet feet for added stability
- Includes 1 1/2" IPS drain connection and 3 1/2" basket strainers
- Backsplash and rolled edges prevent splashes and overflow

Certifications

NSF Listed

Technical Data

Drain Outlet Size	1 1/2 Inches
Faucet Centers	8 Inches
Features	NSF Listed
Gauge	16 Gauge
Leg Construction	Galvanized Steel
Material	Stainless Steel
Number of Compartments	3 Compartments
Number of Drainboards	2 Drainboards
Stainless Steel Type	Type 304
Style	2 Drainboards
Type	Straight / Line Sinks

Plan View

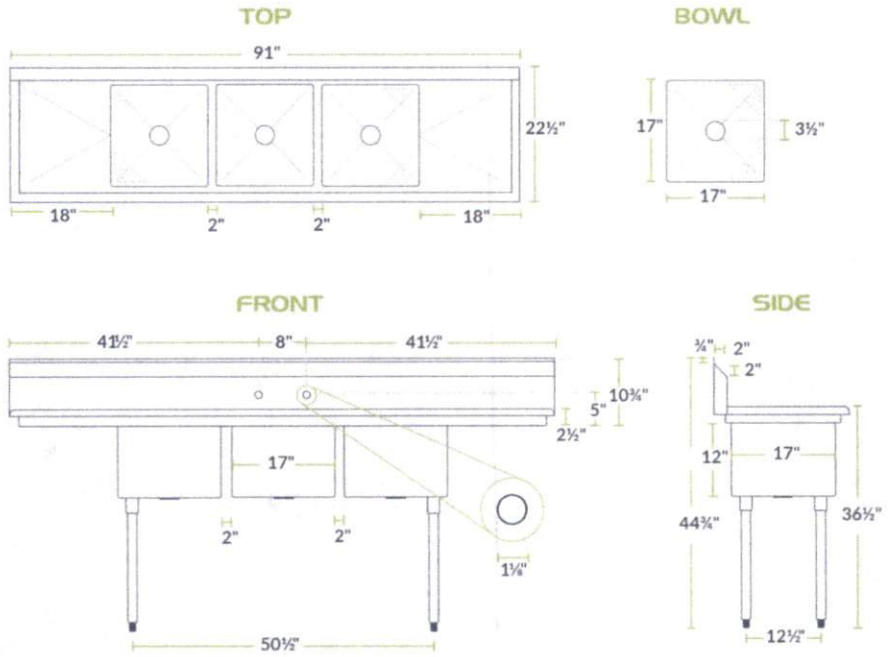

Notes & Details

This versatile Regency three compartment stainless steel commercial sink with drainboards offers you the divided bowls that you need to efficiently clean your dishes at an affordable price! This sink's three compartments allow you to conveniently complete the entire dishwashing process--washing, rinsing, and sanitizing--within the same unit. Ideal for any establishment, its multipurpose functionality and durable design will go a long way in your commercial kitchen. Made of 16 gauge type 304 stainless steel for long-lasting durability and exceptional resistance to corrosion, and supported by 1 5/8" galvanized steel legs, you can always be sure that your sink is stable and ready for use. Each sink bowl measures 17" x 17" with a 12" depth to hold water, sanitizer, dishes, and more, while (3) 3 1/2" basket strainers prevent scraps of food from clogging your plumbing. For sanitation, the coved corners of the sink bowls allow for fast and easy cleaning.

This sink comes with a 18" drainboard on either side to help dry wet dishes, and the backsplash is 10 3/4" tall to keep your walls dry. A 2 1/2" raised rolled edge provides comfort and helps contain splashes and overflow. Adjustable plastic bullet feet allow you to level the sink on uneven flooring for sure stability, and precut holes are drilled into the backsplash on 8" centers for your wall-mounted faucet (sold separately).

Regency Tables & Sinks

351S60N

Cooking Performance Group S60-N Natural Gas 10 Burner 60" Range with 2 Standard Ovens - 360,000 BTU

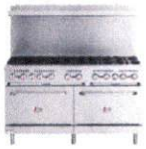

Item #: 351S60N Qty: _____

Project: _____

Approval: _____ Date: _____

Features

- (10) 30,000 BTU open top burners with cast iron lift-off grates for easy cleaning
- Rugged stainless steel front and aluminum sides; porcelainized oven bottom
- 9 1/2" deep back shelf and 4 1/2" plate rail for added storage and safety
- Free caster set available above with your purchase
- Requires a natural gas connection; located on the right side of the unit

Technical Data

Width	60 Inches
Depth	32 5/8 Inches
Height	60 3/8 Inches
Oven Interior Width	26 7/8 Inches
Oven Interior Depth	25 7/8 Inches
Oven Interior Height	13 7/8 Inches
Burner BTU	30000 BTU
Burner Style	Grates
Compliances	Commonwealth of Massachusetts
Control Type	Manual

Certifications

ETL US & Canada

ETL Sanitation

3/4" Gas Connection

351S60N

Cooking Performance Group S60-N Natural Gas 10 Burner 60" Range with 2 Standard Ovens - 360,000 BTU

Technical Data

Gas Inlet Size	3/4 Inches
Installation Type	Freestanding
Maximum Temperature	550 Degrees F
Number of Burners	10 Burners
Number of Ovens	2
Number of Racks	4
Oven BTU	30000
Power Type	Natural Gas
Range Base Style	Standard Oven
Total BTU	360000 BTU

Plan View

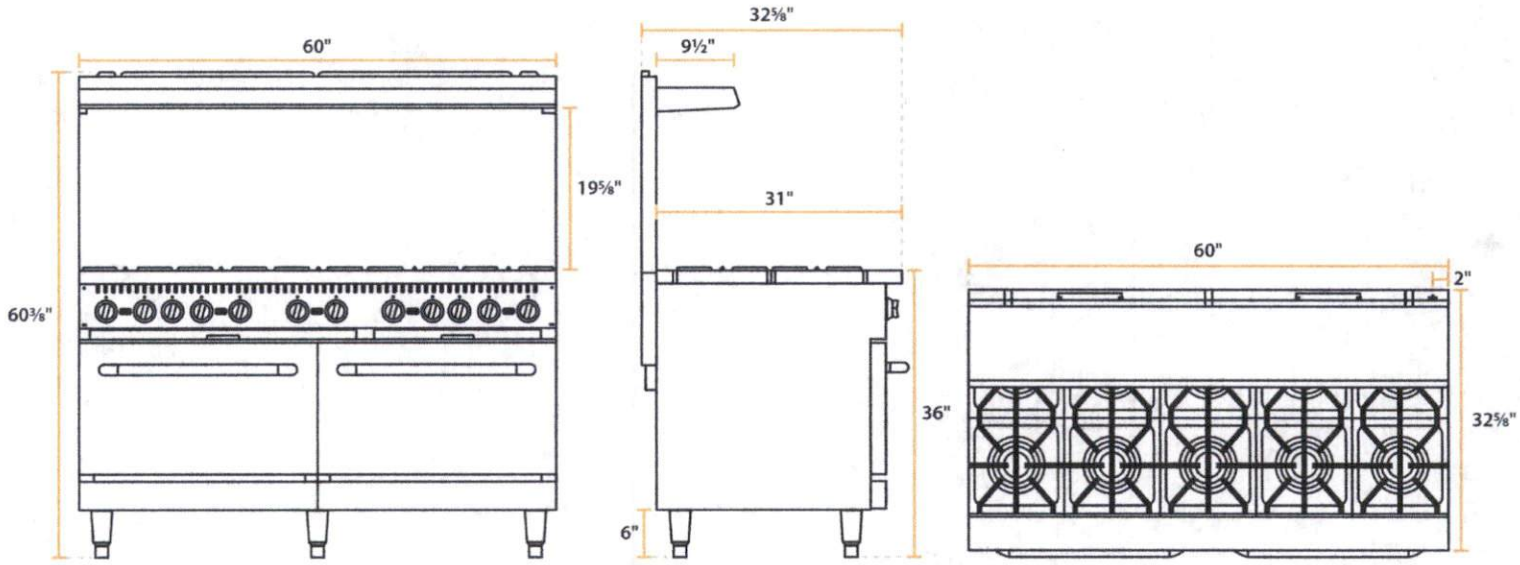

FRONT SIDE TOP

351S60N

Cooking Performance Group S60-N Natural Gas 10 Burner 60" Range with 2 Standard Ovens - 360,000 BTU

Notes & Details

Boost your kitchen's efficiency, reliability, and overall performance with this Cooking Performance Group S60-N gas range! This natural gas range boasts (10) 30,000 BTU open top burners to deliver the impressive cooking performance you demand. The independently-controlled burners mean you can simultaneously execute a wide variety of tasks while their 12" x 12" heavy-duty cast iron grates support your sauce pans, fry pans, and other cookware. These rugged grates allow you to confidently boil, saute, and simmer as needed while effortlessly sliding even the heaviest stock pots from one burner to another. A 4 1/2" plate rail gives you a bit of extra room to work with and combines with a 9 1/2" deep back shelf that holds go-to seasonings and supplies to maximize your cooktop efficiency.

Two 30,000 BTU standard ovens make this unit even more versatile by giving you a convenient way to warm your delicious foods or even do a bit of baking for your dessert menu! The ovens' temperature can be adjusted from 250-550 degrees Fahrenheit to accommodate virtually any recipe. With 2 chrome plated racks that can be used in 4 different positions within each cavity, you can easily arrange the ovens to best complement your specific needs.

This 60" range features a rugged stainless steel front and durable aluminum sides that are not only designed to provide you with years of trouble-free performance, but are also extremely simple to clean! The cast iron grates lift off for a simple, thorough cleansing while the deep pull-out crumb tray further expedites end-of-day cleanup. And, thanks to the porcelainized bottom, maintaining a spotless oven is easier than ever. 6" adjustable stainless steel legs ensure that your unit is level and allows you to easily clean underneath for a safe and sanitary kitchen. A natural gas connection, located on the right side of the unit, is required for operation.

⚠ **WARNING:** This product can expose you to chemicals including lead, which are known to the State of California to cause cancer, birth defects, or other reproductive harm. For more information, go to www.p65warnings.ca.gov.

351GMCPG48NL

Cooking Performance Group GM-CPG-48-NL 48" Gas Countertop Griddle with Manual Controls - 120,000 BTU

Item #: 351GMCPG48NL Qty: _____

Project: _____

Approval: _____ Date: _____

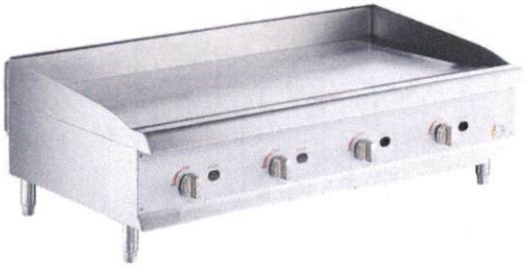

Features

- 4 independently-controlled 30,000 BTU burners
- Standing pilots for instant ignition
- Heavy-duty, adjustable feet provide stability
- Made of durable, easy-to-clean stainless steel
- Field convertible to liquid propane; includes orifice for connection

Technical Data

Width	48 Inches
Depth	29 5/16 Inches
Height	16 5/16 Inches
Cooking Surface Width	48 Inches
Cooking Surface Depth	20 Inches
Backsplash	With Backsplash
Burner BTU	30000 BTU
Burner Style	U-Shaped
Compliances	Commonwealth of Massachusetts
Control Type	Manual

Certifications

ETL US

ETL Sanitation

Field Convertible (Gas)

3/4" Gas Connection

Project: _____ Date: _____ Approval: _____ Qty: ____ Item #: 600T2436G

Regency Tables & Sinks

REGENCY
Tables and Sinks

Regency 24" x 36" 18-Gauge 304 Stainless Steel Commercial Work Table with Galvanized Legs and Undershelf

#600T2436G

Technical Data

Length	36 Inches
Width	24 Inches
Height	34 Inches
Work Surface Height	34 Inches
Backsplash	Without Backsplash
Base Style	Undershelf
Features	Customizable Height NSF Listed

Technical Data

Leg Construction	Galvanized Steel
Number of Legs	4 Legs
Size	24" x 36"
Stainless Steel Type	Type 304
Table Style	Undershelf
Tabletop Material	Stainless Steel
Top Capacity	430 lb.
Undershelf Capacity	320 lb.
Undershelf Construction	Galvanized Steel
Usage	Light Duty

Notes & Details

This Regency 24" x 36" stainless steel commercial work table with undershelf provides additional work space in your busy kitchen. Great for prepping entrees, sides, and desserts, it's constructed from 18-gauge, 304 series stainless steel which offers greater durability and corrosion resistance than type 430 stainless steel. It has a smooth, easy-to-clean surface which makes this work table an ideal addition to your establishment. With the ability to hold up to 430 lb. of evenly distributed weight on the top shelf and 320 lb. on the undershelf, this work table provides additional storage options in crowded kitchens or tight work spaces.

The adjustable, galvanized steel undershelf should be placed 6" off of the ground when used in food service applications to comply with food safety regulations. Plus, a height of 34" allows you to can create a comfortable work station for your employees. For increased stability, the legs of this work table are 1 5/8" in diameter and are also made of tubular galvanized steel, with plastic feet that are adjustable up to 1" to best fit your needs!

⚠ **WARNING:** This product can expose you to chemicals including Nickel and Lead, which are known to the State of California to cause cancer, birth defects, or other reproductive harm. For more information, go to www.p65warnings.ca.gov.

Steelton

Project _____

Item 522ETSG24602 Quantity _____

Approval _____ Date _____

Steelton 24" x 60" 18 Gauge 430 Stainless Steel Work Table with Undershelf and 2" Rear Upturn

Item #522ETSG24602

Special Features

- Made of 18 gauge, type 430 stainless steel
- Galvanized steel legs and undershelf
- Ideal for lower volume kitchens and startups
- Undershelf is adjustable
- Rolled front edge with 2" rear upturn

Technical Data

Length	60 Inches
Width	24 Inches
Height	36 Inches
Backsplash Height	2 Inches
Work Surface Height	34 Inches
Backsplash	With Backsplash
Features	Customizable Height NSF Listed With Undershelf
Gauge	18 Gauge

Certifications

NSF Listed

Technical Data

Leg Construction	Galvanized Steel
Number of Legs	4 Legs
Size	24" x 60"
Stainless Steel Type	Type 430
Tabletop Material	Stainless Steel
Top Capacity	650 lb.
Undershelf Capacity	396 lb.
Undershelf Construction	Galvanized Steel
Usage	Light Duty

Technical Drawing

522ETSG24602

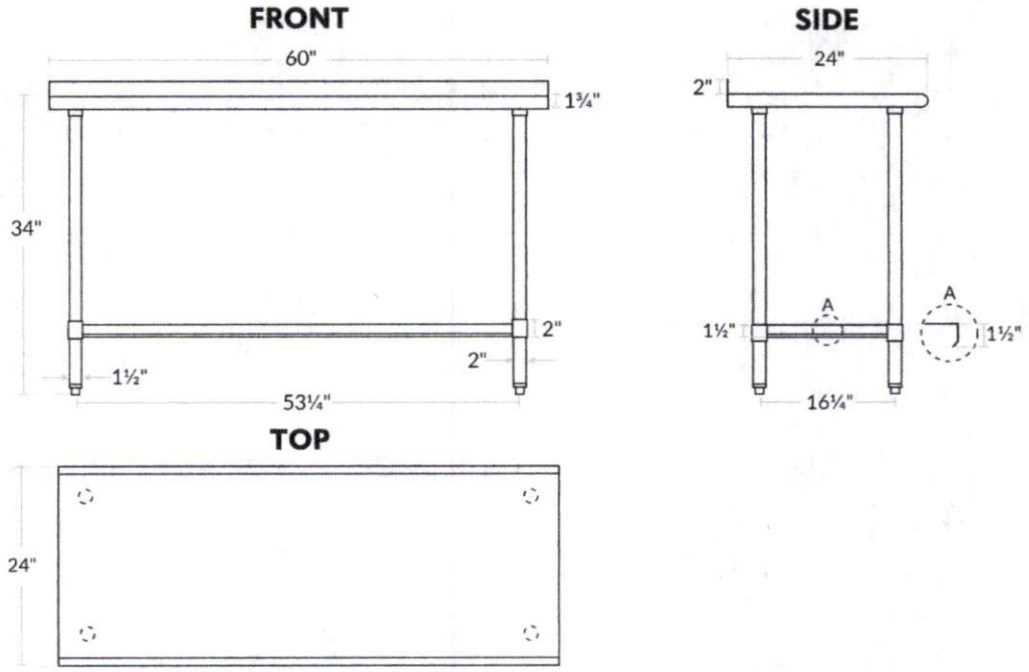

⚠ **WARNING:** This product can expose you to chemicals including lead, which are known to the State of California to cause cancer, birth defects, or other reproductive harm. For more information, go to www.p65warnings.ca.gov.

Project: _____ Date: _____ Approval: _____ Qty: ____ Item #: 600HS12SP

Regency Tables & Sinks

REGENCY
Tables and Sinks

Regency 12" x 16" Wall Mounted Hand Sink with Gooseneck Faucet and Side Splash

#600HS12SP

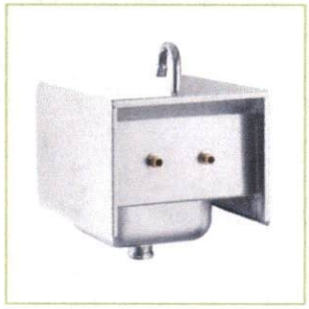

Technical Data

Length	12 Inches
Width	16 Inches
Height	12 Inches
Bowl Depth	4 Inches
Bowl Front to Back	9 Inches
Bowl Left to Right	9 Inches
Compliances	Commonwealth of Massachusetts
Faucet Centers	4 Inches
Flow Rate	2 GPM
Gauge	20 Gauge

Features

- 8" gooseneck faucet included
- 18-gauge type 304 stainless steel side splashes and a wall mounted clip
- 20-gauge type 304 stainless steel
- Holes punched on 4" centers; 8" backsplash
- Single 9" x 9" x 4" bowl includes 1 1/2" IPS drain baskets

Certifications

NSF **NSF Listed**

Technical Data

Features	Faucet Included NSF Listed Side Splashes
Installation Type	Wall Mounted
Material	Stainless Steel
Number of Compartments	1 Compartment
Number of Faucets	1
Stainless Steel Type	Type 304
Type	Hand Sinks

Plan View

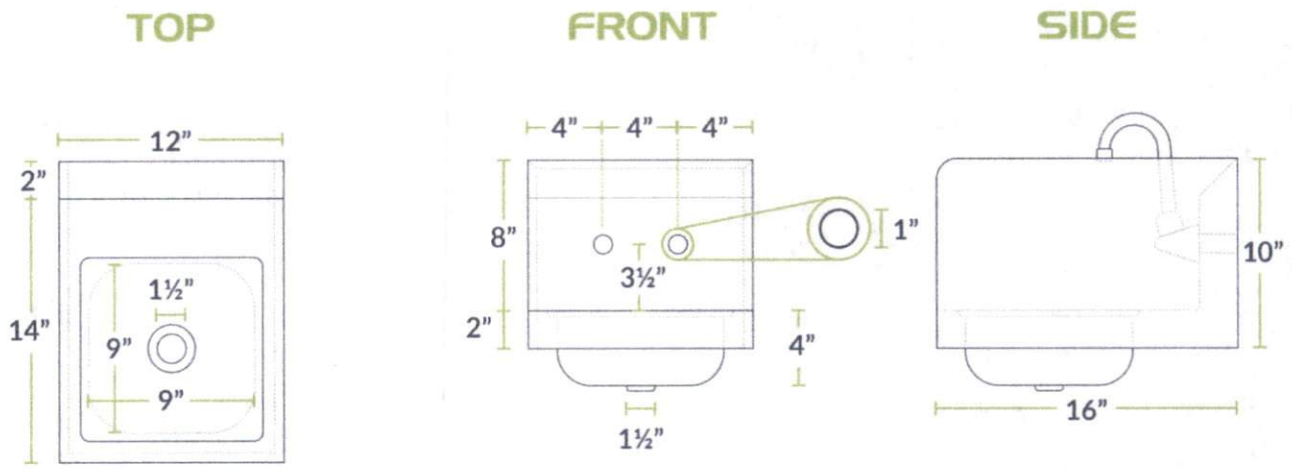

Notes & Details

Keep your restaurant up to code without sacrificing space with this Regency HS-12-SP space saver hand sink with side splash. Each sink comes standard with a single 9" x 9" x 4" bowl and 8" high back and side splashes. Additionally, this hand sink has two holes punched on 4" centers to accept its included Regency 8" gooseneck faucet.

This sink offers an economical, 20-gauge type 304 stainless steel construction along its top, bowl, and backspash, in addition to 18-gauge type 304 stainless steel side splashes and a wall mounted clip. It comes standard with a 1 1/2" IPS drain basket.

⚠ **WARNING:** This product can expose you to chemicals including Nickel and Lead, which are known to the State of California to cause cancer, birth defects, or other reproductive harm. For more information, go to www.p65warnings.ca.gov.

351GTCPG60NL

Cooking Performance Group GT-CPG-60-NL 60" Gas Countertop Griddle with Thermostatic Controls - 150,000 BTU

Item #: 351GTCPG60NL Qty: _____

Project: _____

Approval: _____ Date: _____

Features

- 5 independently-controlled 30,000 BTU burners
- Standing pilots for instant ignition
- Heavy-duty, 3/4" thick steel griddle plate
- Made of durable, easy-to-clean stainless steel
- Field convertible to liquid propane; includes orifice for connection

Technical Data

Width	60 Inches
Depth	29 5/16 Inches
Height	16 3/4 Inches
Cooking Surface Width	60 Inches
Cooking Surface Depth	20 Inches
Backsplash	With Backsplash
Burner BTU	30000 BTU
Control Type	Thermostatic
Cooking Surface Material	Polished Steel
Features	Massachusetts Accepted Plumbing Product

Certifications

- ETL Sanitation
- 3/4" Gas Connection
- Field Convertible (Gas)
- ETL, US & Canada

351GTCPG60NL

Cooking Performance Group GT-CPG-60-NL 60" Gas Countertop Griddle with Thermostatic Controls - 150,000 BTU

Technical Data

Installation Type	Countertop
Number of Burners	5 Burners
Number of Controls	5 Controls
Plate Thickness	3/4 Inch
Power Type	Natural Gas
Temperature Range	200 - 575 Degrees F
Total BTU	150000 BTU
Type	Griddles

Plan View

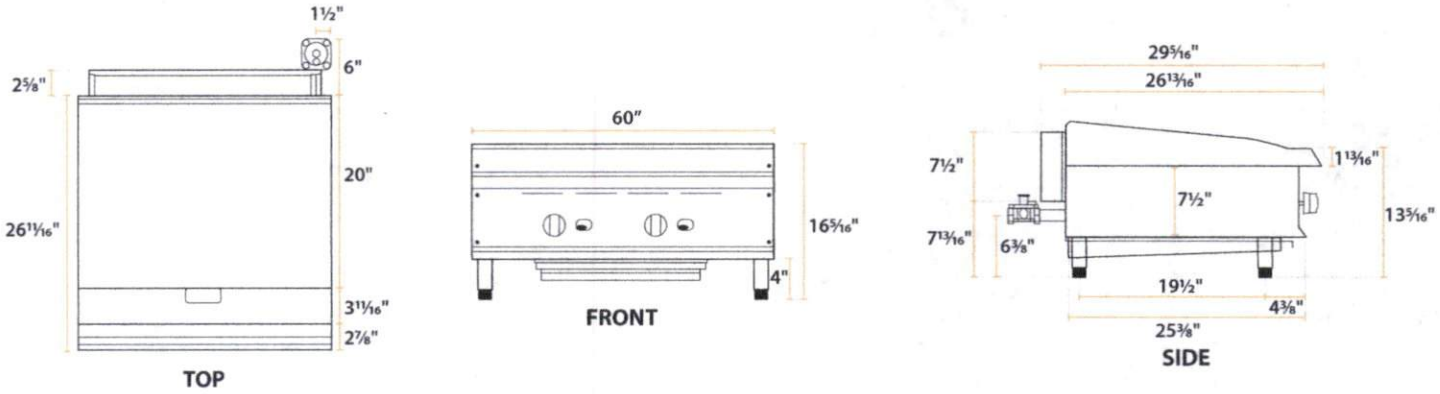

351GTCPG60NL

Cooking Performance Group GT-CPG-60-NL 60" Gas Countertop Griddle with Thermostatic Controls - 150,000 BTU

Notes & Details

The Cooking Performance Group GT-CPG-60-NL 60" countertop griddle features energy saving thermostats that are adjustable from 200 to 575 degrees Fahrenheit for precise temperature control, making it an excellent choice for delicate breakfast foods like eggs and hotcakes, as well as your lunch menu of chicken, hamburgers, and other meats! The unit boasts 5 powerful 30,000 BTU stainless steel burners with standing pilots for instant ignition that work in perfect harmony with the thermostats to maintain your selected griddle temperature during peak cooking periods. The 3/4" thick, 60" wide polished steel cooking surface features an impressive 20" depth that is sure to deliver all of the cooking workspace needed.

The Cooking Performance Group GT-CPG-60-NL countertop griddle is made of rugged stainless steel that is both durable and extremely easy to clean, includes back and side splashes to protect your walls and countertops, and even offers a full width waste tray to provide you with the complete package of excellent performance and worry-free maintenance! The unit offers a conveniently located 3/4" rear gas connection and ships ready to connect to a natural gas supply. The unit includes a liquid propane orifice kit for quick and easy field conversion.

⚠ **WARNING:** This product can expose you to chemicals including lead, which are known to the State of California to cause cancer and birth defects or other reproductive harm. For more information, go to www.p65warnings.ca.gov.

351CPGSP18N

Cooking Performance Group CPG-SP-18-N Natural Gas Stock Pot Range - 80,000 BTU

Item #: 351CPGSP18N Qty: _____

Project: _____

Approval: _____ Date: _____

Features

- Two adjustable valves provide 80,000 BTU
- Cabinet base for extra storage and drip tray for easy clean up
- Stainless steel front, sides, 6" adjustable legs, and base
- Durable cast iron grate
- Requires natural gas connection

Technical Data

Width	18 Inches
Depth	25 Inches
Height	22 1/2 Inches
Base Style	Storage Base
Burner BTU	80000 BTU
Color	Silver
Features	Field-Convertible (Gas) Massachusetts Accepted Plumbing Product
Gas Connection Size	3/4 Inches
Installation Type	Freestanding

Certifications

- CSA, US and Canada
- CSA Design, US
- CSA Blue Flame, Canada
- 3/4" Gas Connection
- Field Convertible (Gas)

351CPGSP18N

Cooking Performance Group CPG-SP-18-N Natural Gas Stock Pot Range - 80,000 BTU

Technical Data

Material	Stainless Steel
Number of Burners	1 Burner
Power Type	Natural Gas
Total BTU	80000 BTU
Type	Stock Pot Ranges

Notes & Details

This Cooking Performance Group CPG-SP-18-N field convertible natural gas stock pot range allows you to quickly and easily prepare your flavorful pastas, soups, and sauces while taking up minimal space! Equipped with 1 adjustable valve, this unit delivers a total of 80,000 BTU of power to ensure efficiency and even cooking at your operation. The stainless steel front and sides combine with a heavy-duty cast iron top grate to provide outstanding durability.

Thanks to the cabinet base, this range offers operators additional storage space to keep stock pots, ladles, tongs, and pot holders close by. With 6" adjustable legs, the unit can remain stable on uneven kitchen floors. Plus, a drip tray makes it easy to clean the unit at the end of a busy shift. This unit runs on natural gas, but a field conversion orifice kit comes included with your purchase.

⚠ **WARNING:** This product can expose you to chemicals including lead, which are known to the State of California to cause cancer and birth defects or other reproductive harm. For more information, go to www.p65warnings.ca.gov.

Project _____

Item 829BMR23R Quantity _____

Approval _____ Date _____

Main Street Equipment BMR-23-R 29" Solid Door Reach-In Refrigerator

Item #829BMR23R

Special Features

- Corrosion-resistant stainless steel exterior with aluminum interior
- Features a self-closing and stay-open locking door
- Includes 3 epoxy-coated shelves with 90 lb. capacity each
- Digital temperature controller with automatic defrost function
- R-290 refrigerant; 115V; 1/4 hp; 3.6 Amps

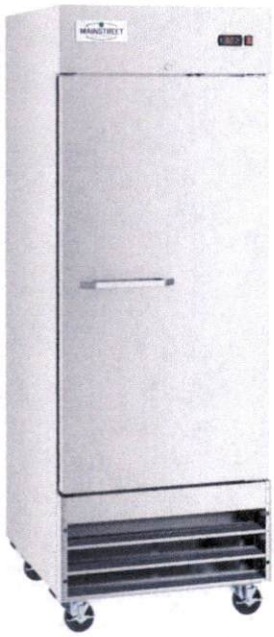

Technical Data

Width	29 Inches
Depth	32 3/16 Inches
Height	82 1/2 Inches
Cord Length	98 Inches
Interior Width	24 3/8 Inches
Right Door Opening Width	24 5/16 Inches
Interior Depth	27 1/8 Inches
Interior Height	51 9/16 Inches
Amps	3.6 Amps
Hertz	60 Hertz

Certifications

5-15P

ETL Sanitation

ETL US

Technical Data

Phase	1 Phase
Voltage	115 Volts
Wattage	336 Watts
Capacity	23.1 cu. ft.
Compressor Location	Bottom Mounted
Door Type	Solid
Hinge Location	Right
Horsepower	1/4 HP
Individual Shelf Capacity	90 lb.
Installation Type	Freestanding
Material	Aluminum / Stainless Steel
Number of Doors	1 Doors
Number of Shelves	3 Shelves
Plug Type	NEMA 5-15P
Power Type	Electric
Refrigerant Type	R-290
Sections	1 Section
Temperature Range	32 - 40 Degrees F
Type	Refrigerators

⚠ **WARNING:** This product can expose you to chemicals including lead, which are known to the State of California to cause cancer, birth defects, or other reproductive harm. For more information, go to www.p65warnings.ca.gov.

Project _____

Item 541FF40N Quantity _____

Approval _____ Date _____

Main Street Equipment Natural Gas 40 lb. Stainless Steel Floor Fryer - 90,000 BTU

Item #541FF40N

Special Features

- All stainless steel tank, door, front, top, ledge, and header; galvanized steel sides
- Easy-to-use thermostat for accurate and adjustable temperature between 200-400 degrees Fahrenheit
- 40 lb. fry pot with an efficient and quiet 3 tube burner system and full port drain
- Two nickel chrome wire mesh fry baskets included
- Natural gas, 90,000 BTU

Technical Data

Width	15 1/2 Inches
Depth	30 1/4 Inches
Height	47 1/8 Inches
Fry Pot Width	14 Inches
Fry Pot Depth	13 3/4 Inches
Burner Style	Tube
Cabinet	Galvanized and Stainless Steel
Capacity	40 lb.
Compliances	Commonwealth of Massachusetts
Control Type	Millivolt

Certifications

ETL Sanitation

ETL US & Canada

3/4" Gas Connection

Technical Data

Gas Inlet Size	3/4 Inches
Number of Burners	3 Burners
Number of Fry Baskets	2 Fry Baskets
Number of Fry Pots	1 Fry Pot
Power Type	Natural Gas
Temperature Range	200 - 400 Degrees F
Temperature Settings	Adjustable
Total BTU	90000 BTU
Type	Gas Floor Fryers

Technical Drawing

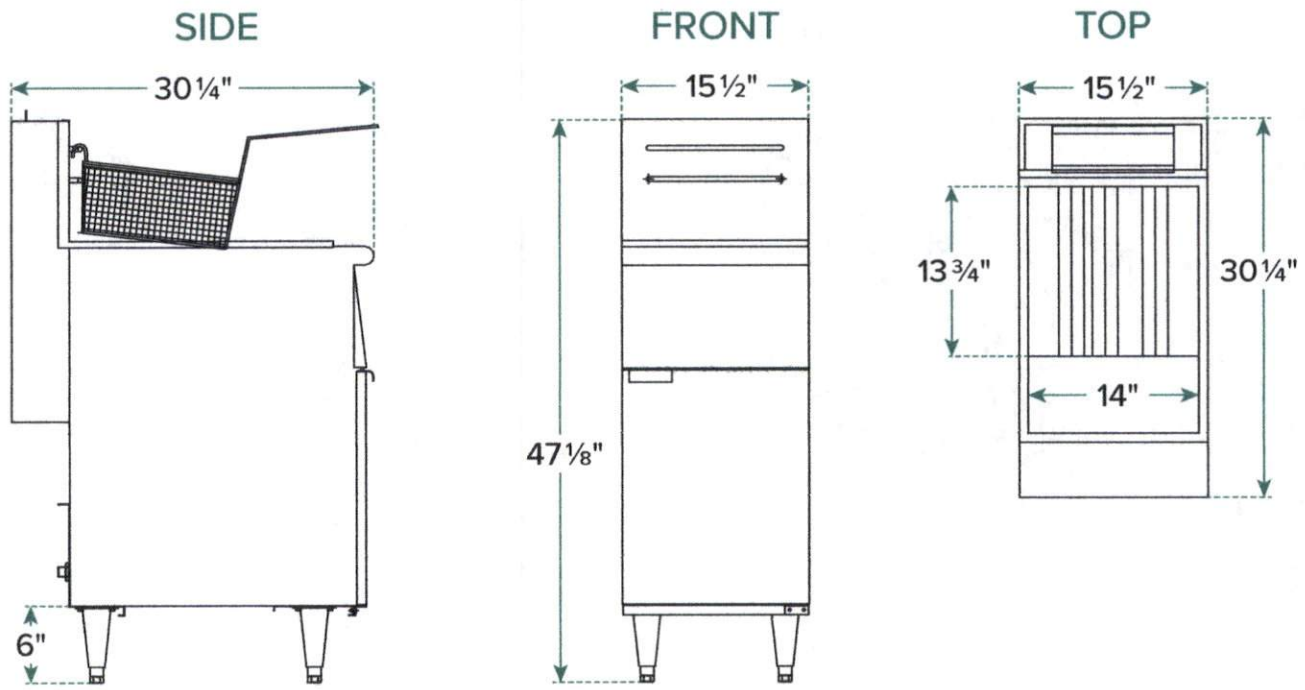

⚠ **WARNING:** This product can expose you to chemicals including lead, which are known to the State of California to cause cancer, birth defects, or other reproductive harm. For more information, go to www.p65warnings.ca.gov.

Item #: 178APT48MHC Project: _____

Qty: _____ Date: _____ Approval: _____

Avantco Refrigeration

Avantco APT-48M-HC 48" 2 Door Mega Top Refrigerated Sandwich Prep Table

Item #178APT48MHC

Technical Data

Width	46 3/4 Inches
Depth	35 Inches
Height	46 Inches
Cutting Board Width	47 Inches
Left Door Opening Width	19 3/8 Inches
Nominal Width	48 Inches
Right Door Opening Width	19 3/8 Inches
Cutting Board Depth	8 Inches
Work Surface Height	35 1/4 Inches
Amps	2.4 Amps

Features

- Stainless steel exterior and aluminum interior with 304 stainless steel floor
- Industry-best 3/4" cutting board is built-in for convenient prep space and removable for cleaning
- Digital control with auto defrost
- Mega top accommodates (18) 1/6 size, 6" deep food pans
- 115V; 1/2 hp; R-290 refrigerant; 2.4 Amps

Certifications

ETL Sanitation **ETL US & Canada** **5-15P**

Avantco Refrigeration

Technical Data

Hertz	60 Hertz
Phase	1 Phase
Voltage	115 Volts
1/6 Size Pan Capacity	18 Pans
Access Type	Doors
BTU (LBP)	1285 BTU
Compressor Style	Side / Rear Breathing
Construction	Stainless Steel and Aluminum
Display Case Type	Refrigerated
Door Style	Swing
Door Type	Solid
Hinge Location	Left/Right
Horsepower	1/2 HP
Installation Type	Freestanding
Net Volume	13 cu. ft.
Number of Doors	2 Doors
Number of Shelves	2 Shelves
Plug Type	NEMA 5-15P
Refrigerant Type	R-290
Style	Counter Height
Temperature Range	33 - 40 Degrees F
Top Type	Mega Top
Type	Prep Refrigeration

Plan View

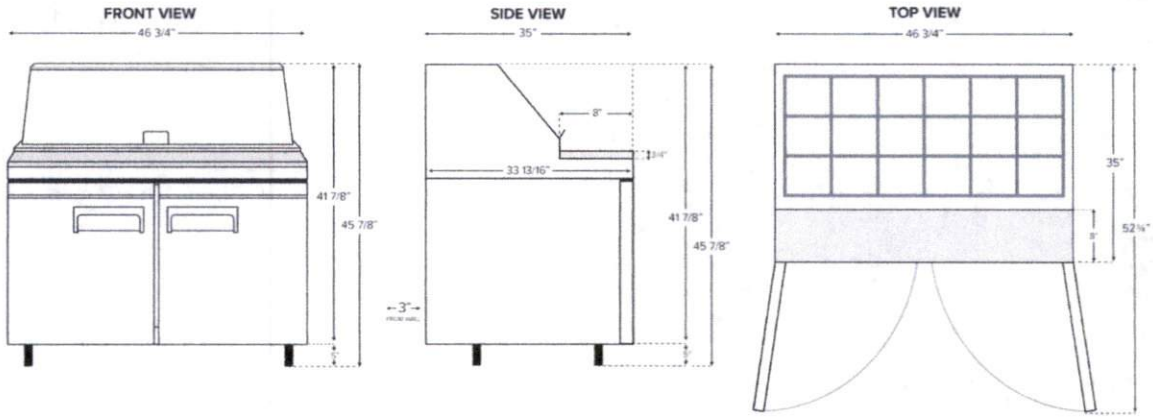

Notes & Details

Optimize your back-of-house operations with this Avantco APT-48M-HC 47" 2 door mega top stainless steel refrigerated sandwich prep table, which allows you to better keep up with customer demand. Whether used in a university, sub shop, or hospital, the unit will help streamline the sandwich prep process with its convenient features and capacity. Its top accommodates up to (18) 1/6 size food pans up to 6" deep (sold separately). These pans are great for holding common sandwich or salad toppings, from eggs and cheese to green pepper or ham. Plus, a lift-up lid encloses the top to maintain proper, food-safe temperatures.

A full-length cutting board, which is 8" deep, is mounted to the table surface, providing a place for slicing ingredients and assembling orders. The cutting board can even be removed for easy cleaning or swapped out with another board of your choosing. Beneath the workspace is additional storage space. Because it's refrigerated, the space is great for storing back-up ingredients, such as deli meat and cheese, as well as less-common toppings. Two epoxy-coated shelves are included, and each can accommodate up to 90 lb. of weight to help you with organizing your assorted supplies. Divider bars are also included for ultimate convenience.

High-quality performance is made possible by the unit's 1/2 hp refrigeration system, which maintains temperatures between 33 and 40 degrees Fahrenheit using R-290 refrigerant. This specialized refrigerant has an ozone depletion potential (ODP) of 0 and a global warming potential (GWP) of 3. You can control your unit freely using the built-in digital controls.

The construction of this unit is designed with commercial use in mind. It features a stainless steel exterior and an aluminum interior with a 304 stainless steel floor, which is fortified with foamed-in-place polyurethane insulation. The insulation also helps to promote proper temperature retention. For operation, the prep table requires a 115V electrical connection.

⚠ **WARNING:** This product can expose you to chemicals including lead, which are known to the State of California to cause cancer, birth defects, or other reproductive harm. For more information, go to www.p65warnings.ca.gov.

Avantco Refrigeration

Item #: 178SSPT71MC Project: _____

Qty: _____ Date: _____ Approval: _____

Avantco Refrigeration

Avantco SS-PT-71M-C 70" 3 Door Mega Top Stainless Steel Refrigerated Sandwich Prep Table with 11 1/2" Cutting Board

Item #178SSPT71MC

Technical Data

Width	70 3/8 Inches
Depth	37 1/2 Inches
Height	45 7/8 Inches
Cutting Board Width	70 3/8 Inches
Interior Width	66 1/2 Inches
Nominal Width	72 Inches
Cutting Board Depth	11 1/2 Inches
Interior Depth	23 3/4 Inches
Interior Height	23 1/2 Inches
Work Surface Height	35 1/4 Inches

Features

- Mega top accommodates (30) 1/6 size, 6" deep food pans (sold separately)
- Industry-best 3/4" thick, 11 1/2" deep cutting board adds 3 1/2" of additional workspace
- Digital control with auto defrost
- Stainless steel exterior and interior; foamed-in-place polyurethane insulation
- 115V; 2/3 hp compressor; R-290 refrigerant

Certifications

5-15P ETL Sanitation ETL US & Canada

Avantco Refrigeration

Technical Data

Amps	3.3 Amps
Hertz	60 Hertz
Phase	1 Phase
Voltage	115 Volts
1/6 Size Pan Capacity	30 Pans
Access Type	Doors
BTU (LBP)	2080 BTU
Capacity	18 cu. ft.
Casters	With Casters
Compressor Style	Side / Rear Breathing
Construction	Stainless Steel
Door Style	Swing
Door Type	Solid
Hinge Location	Left/Right
Horsepower	2/3 HP
Number of Doors	3 Doors
Number of Shelves	3 Shelves
Plug Type	NEMA 5-15P
Refrigerant Type	R-290
Style	Counter Height
Temperature Range	33 - 40 Degrees F
Top Type	Cutting Top Mega Top
Type	Prep Refrigeration

Notes & Details

Optimize your back-of-house operations with this Avantco SS-PT-71M-C 70" 3 door stainless steel mega top refrigerated sandwich prep table, and better keep up with customer demands. Whether used in a university, sub shop, or hospital, the unit is sure to help streamline the sandwich prep process with its convenient features and capacity. Its top, for instance, accommodates up to (30) 1/6 size food pans up to 6" deep (sold separately). These are great for holding common sandwich or salad toppings, from eggs and cheese to green pepper or ham. Plus, a lift-up lid encloses the top to maintain proper, food safe temperatures. A full-length cutting board, which is 3/4" thick and 11 1/2" deep, is mounted to the table surface, providing a place for slicing ingredients and assembling orders. This mega top, industry-best cutting board is removable for easy cleaning at the end of the day.

Beneath the workspace is additional storage space. Because it's refrigerated, the space is great for storing back-up ingredients, such as deli meat and cheese, as well as less common toppings. Three epoxy-coated shelves are included and can each accommodate up to 90 lb. of weight, helping to organize your assorted supplies.

High-quality performance is made possible by the unit's 2/3 hp refrigeration system, which maintains temperatures between 33 and 40 degrees Fahrenheit. It does this by circulating R-290 refrigerant. This specialized refrigerant has an ozone depletion potential (ODP) of 0 and a global warming potential (GWP) of 3.

The construction of this unit is designed with commercial use in mind. It features a 430 type stainless steel exterior and 304 type stainless steel interior, which are fortified with foamed-in-place polyurethane insulation. The insulation also helps to promote proper temperature retention. For operation, the prep table requires a 115V electrical connection.

⚠ **WARNING:** This product can expose you to chemicals including lead, which are known to the State of California to cause cancer, birth defects, or other reproductive harm. For more information, go to www.p65warnings.ca.gov.

Project: _____ Date: _____ Approval: _____ Qty: ____ Item #: 600TB3018G

Regency Tables & Sinks

REGENCY
Tables and Sinks

Regency 30" x 18" 18-Gauge 304 Stainless Steel Equipment Filler Table with Backsplash and Galvanized Undershelf

#600TB3018G

Technical Data

Length	18 Inches
Width	30 Inches
Height	38 Inches
Backsplash Height	4 Inches
Work Surface Height	34 Inches
Backsplash	With Backsplash
Base Style	Undershelf
Features	Customizable Height NSF Listed
Gauge	18 Gauge

Features

- 18-gauge type 304 stainless steel top shelf
- Galvanized steel undershelf and legs with adjustable plastic bullet feet
- Designed to fit in between two pieces of equipment
- 4" backsplash helps prevent spills
- Aluminum corner brackets on undershelf

Certifications

NSF Listed

Technical Data

Leg Construction	Galvanized Steel
Number of Legs	4 Legs
Size	30" x 18"
Stainless Steel Type	Type 304
Table Style	Undershelf
Tabletop Material	Stainless Steel
Top Capacity	420 lb.
Type	Filler Tables
Undershelf Capacity	300 lb.
Undershelf Construction	Galvanized Steel
Usage	Light Duty

Notes & Details

This stainless steel commercial 30" x 18" equipment filler table with a 4" high backsplash and undershelf is designed to help you maximize the space in your kitchen. The top shelf is made of durable and easy-to-clean 18-gauge type 304 stainless steel, offering excellent durability and a professional looking finish. With its thin footprint at just 30" in width, this table easily fits between kitchen equipment to provide important extra work space for food preparation, storage supplies, and other tasks within your business.

The work table's adjustable undershelf is constructed from 18-gauge galvanized steel and is further supported with aluminum corner brackets. A 4" high backsplash is included to help protect walls and contain items on the work top. The legs of this work table are 1 5/8" in diameter and are also made of galvanized steel, with plastic feet that are adjustable up to 1".

⚠ **WARNING:** This product can expose you to chemicals including Nickel and Lead, which are known to the State of California to cause cancer, birth defects, or other reproductive harm. For more information, go to www.p65warnings.ca.gov.

Item #: 177STE5S Project: _____

Qty: _____ Date: _____ Approval: _____

Avantco Equipment

Avantco STE-5S Five Pan Open Well Electric Steam Table with Undershelf - 208/240V, 3750W

Item #177STE5S

Technical Data

Width	71 Inches
Depth	30 Inches
Height	34 Inches
Power Cord Length	4 9/16 Feet
Cutting Board Width	71 Inches
Cutting Board Depth	8 Inches
Hertz	60 Hertz
Voltage	208 - 240 Volts
Wattage	3750 Watts
Base Style	Undershelf

Features

- Medium-duty stainless steel and galvanized leg construction, ensuring durability and reliability
- 8" deep wells hold 5 full size food pans; accommodates various pan configurations for versatility
- Polyethylene 8" deep cutting board provides plenty of extra work space
- Convenient undershelf provides additional space for utensils, pans, or lids
- Independent infinite control knobs for optimum heating versatility

Certifications

6-30P ETL US

Avantco Equipment

Technical Data

Casters	Without Casters
Color	Silver
Control Type	Infinite
Material	Stainless Steel / Galvanized Steel
Number of Pans	5 Pans
Number of Wells	5
Plug Type	NEMA 6-30P
Power Type	Electric
Style	Floor Model Heated
Top Material	Stainless Steel
Type	Stationary
Usage	Indoor
Well Type	Open / Dry Well

Notes & Details

Keep all of your menu items piping hot and readily available with the Avantco STE-5S five pan open well electric steam table with undershelf! This powerful holding unit can hold five full size food pans full of pasta, meat, or side dishes in each 750W well. This unit is constructed of medium-duty stainless steel with galvanized legs and 8" deep wells, ensuring the durability and reliability you need at your buffet or catered event.

Use the undershelf to store extra serving utensils, food pans, or lids to keep all of the tools you need close at hand. For extra convenience, the polyethylene 8" deep, 1/2" thick cutting board gives you a little extra work space for changing out food pans or filling plates. For optimum heating versatility, each individual well is independently controlled by an infinite control knob. Although intended for dry use, this steam table can be used wet with a compatible spillage pan (sold separately). A 208/240V electrical connection is required.

⚠ **WARNING:** This product can expose you to chemicals including lead, which are known to the State of California to cause cancer, birth defects, or other reproductive harm. For more information, go to www.p65warnings.ca.gov.

Project: _____ Date: _____ Approval: _____ Qty: ____ Item #: 600S317172G

Regency Tables & Sinks

REGENCY
Tables and Sinks

Regency 91" 16-Gauge Stainless Steel Three Compartment Commercial Sink with Galvanized Steel Legs and 2 Drainboards - 17" x 17" x 12" Bowls

#600S317172G

Technical Data

Length	91 Inches
Width	22 1/2 Inches
Height	44 3/4 Inches
Drainboard Length	18 Inches
Bowl Depth	12 Inches
Backsplash Height	8 1/4 Inches
Work Surface Height	36 1/2 Inches
Basket Drain Size	3 1/2 Inches
Bowl Front to Back	17 Inches
Bowl Left to Right	17 Inches

Features

- 16 gauge type 304 stainless steel sink with galvanized steel legs and adjustable plastic feet
- Designed with (3) 12" deep bowls and rounded corners for easy cleaning
- Galvanized steel legs with adjustable bullet feet for added stability
- Includes 1 1/2" IPS drain connection and 3 1/2" basket strainers
- Backsplash and rolled edges prevent splashes and overflow

Certifications

NSF Listed

Technical Data

Drain Outlet Size	1 1/2 Inches
Faucet Centers	8 Inches
Features	NSF Listed
Gauge	16 Gauge
Leg Construction	Galvanized Steel
Material	Stainless Steel
Number of Compartments	3 Compartments
Number of Drainboards	2 Drainboards
Stainless Steel Type	Type 304
Style	2 Drainboards
Type	Straight / Line Sinks

Plan View

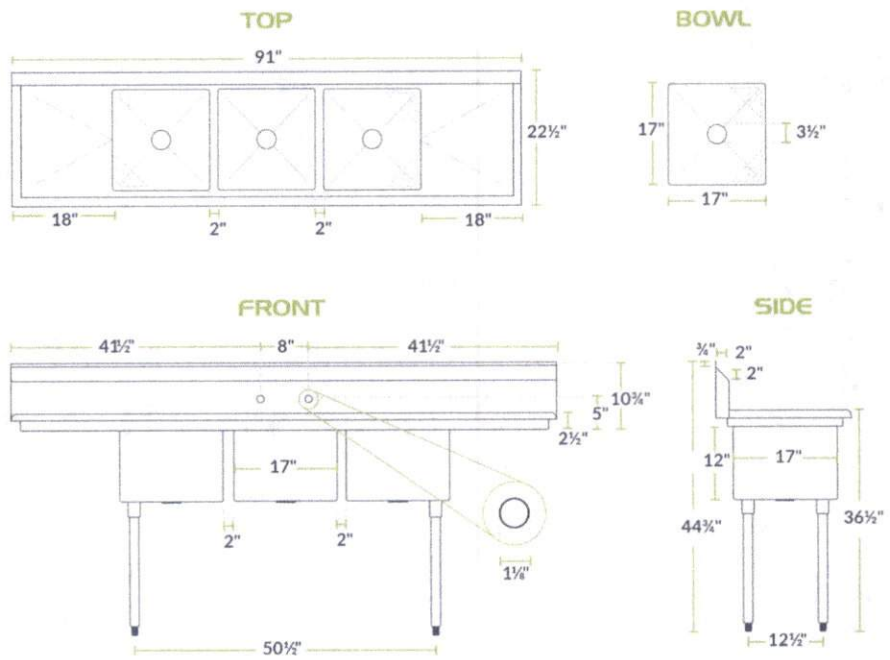

Notes & Details

This versatile Regency three compartment stainless steel commercial sink with drainboards offers you the divided bowls that you need to efficiently clean your dishes at an affordable price! This sink's three compartments allow you to conveniently complete the entire dishwashing process--washing, rinsing, and sanitizing--within the same unit. Ideal for any establishment, its multipurpose functionality and durable design will go a long way in your commercial kitchen. Made of 16 gauge type 304 stainless steel for long-lasting durability and exceptional resistance to corrosion, and supported by 1 5/8" galvanized steel legs, you can always be sure that your sink is stable and ready for use. Each sink bowl measures 17" x 17" with a 12" depth to hold water, sanitizer, dishes, and more, while (3) 3 1/2" basket strainers prevent scraps of food from clogging your plumbing. For sanitation, the coved corners of the sink bowls allow for fast and easy cleaning.

This sink comes with a 18" drainboard on either side to help dry wet dishes, and the backsplash is 10 3/4" tall to keep your walls dry. A 2 1/2" raised rolled edge provides comfort and helps contain splashes and overflow. Adjustable plastic bullet feet allow you to level the sink on uneven flooring for sure stability, and precut holes are drilled into the backsplash on 8" centers for your wall-mounted faucet (sold separately).

Regency Tables & Sinks

351S60N

Cooking Performance Group S60-N Natural Gas 10 Burner 60" Range with 2 Standard Ovens - 360,000 BTU

Item #: 351S60N Qty: _____

Project: _____

Approval: _____ Date: _____

Features

- (10) 30,000 BTU open top burners with cast iron lift-off grates for easy cleaning
- Rugged stainless steel front and aluminum sides; porcelainized oven bottom
- 9 1/2" deep back shelf and 4 1/2" plate rail for added storage and safety
- Free caster set available above with your purchase
- Requires a natural gas connection; located on the right side of the unit

Technical Data

Width	60 Inches
Depth	32 5/8 Inches
Height	60 3/8 Inches
Oven Interior Width	26 7/8 Inches
Oven Interior Depth	25 7/8 Inches
Oven Interior Height	13 7/8 Inches
Burner BTU	30000 BTU
Burner Style	Grates
Compliances	Commonwealth of Massachusetts
Control Type	Manual

Certifications

ETL US & Canada

ETL Sanitation

3/4" Gas Connection

351S60N

Cooking Performance Group S60-N Natural Gas 10 Burner 60" Range with 2 Standard Ovens - 360,000 BTU

Technical Data

Gas Inlet Size	3/4 Inches
Installation Type	Freestanding
Maximum Temperature	550 Degrees F
Number of Burners	10 Burners
Number of Ovens	2
Number of Racks	4
Oven BTU	30000
Power Type	Natural Gas
Range Base Style	Standard Oven
Total BTU	360000 BTU

Plan View

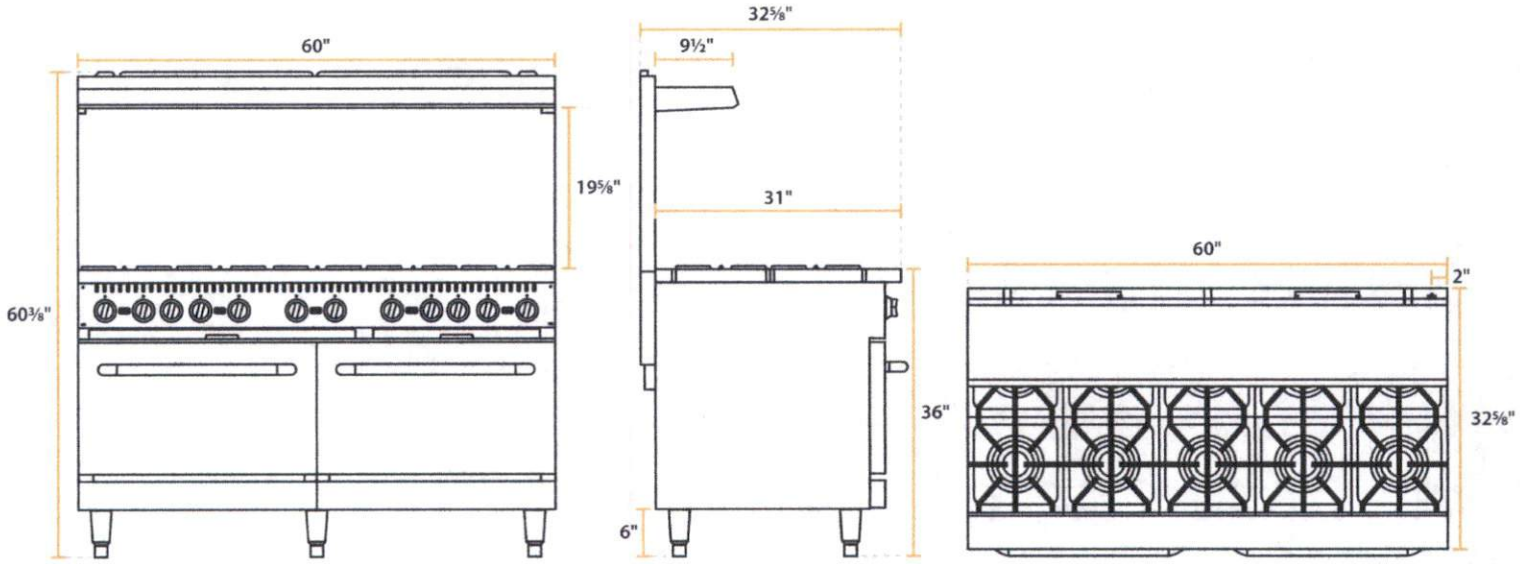

FRONT SIDE TOP

351S60N

Cooking Performance Group S60-N Natural Gas 10 Burner 60" Range with 2 Standard Ovens - 360,000 BTU

Notes & Details

Boost your kitchen's efficiency, reliability, and overall performance with this Cooking Performance Group S60-N gas range! This natural gas range boasts (10) 30,000 BTU open top burners to deliver the impressive cooking performance you demand. The independently-controlled burners mean you can simultaneously execute a wide variety of tasks while their 12" x 12" heavy-duty cast iron grates support your sauce pans, fry pans, and other cookware. These rugged grates allow you to confidently boil, saute, and simmer as needed while effortlessly sliding even the heaviest stock pots from one burner to another. A 4 1/2" plate rail gives you a bit of extra room to work with and combines with a 9 1/2" deep back shelf that holds go-to seasonings and supplies to maximize your cooktop efficiency.

Two 30,000 BTU standard ovens make this unit even more versatile by giving you a convenient way to warm your delicious foods or even do a bit of baking for your dessert menu! The ovens' temperature can be adjusted from 250-550 degrees Fahrenheit to accommodate virtually any recipe. With 2 chrome plated racks that can be used in 4 different positions within each cavity, you can easily arrange the ovens to best complement your specific needs.

This 60" range features a rugged stainless steel front and durable aluminum sides that are not only designed to provide you with years of trouble-free performance, but are also extremely simple to clean! The cast iron grates lift off for a simple, thorough cleansing while the deep pull-out crumb tray further expedites end-of-day cleanup. And, thanks to the porcelainized bottom, maintaining a spotless oven is easier than ever. 6" adjustable stainless steel legs ensure that your unit is level and allows you to easily clean underneath for a safe and sanitary kitchen. A natural gas connection, located on the right side of the unit, is required for operation.

⚠ **WARNING:** This product can expose you to chemicals including lead, which are known to the State of California to cause cancer, birth defects, or other reproductive harm. For more information, go to www.p65warnings.ca.gov.

351GMCPG48NL

Cooking Performance Group GM-CPG-48-NL 48" Gas Countertop Griddle with Manual Controls - 120,000 BTU

Item #: 351GMCPG48NL Qty: _____

Project: _____

Approval: _____ Date: _____

Features

- 4 independently-controlled 30,000 BTU burners
- Standing pilots for instant ignition
- Heavy-duty, adjustable feet provide stability
- Made of durable, easy-to-clean stainless steel
- Field convertible to liquid propane; includes orifice for connection

Technical Data

Width	48 Inches
Depth	29 5/16 Inches
Height	16 5/16 Inches
Cooking Surface Width	48 Inches
Cooking Surface Depth	20 Inches
Backsplash	With Backsplash
Burner BTU	30000 BTU
Burner Style	U-Shaped
Compliances	Commonwealth of Massachusetts
Control Type	Manual

Certifications

ETL US

ETL Sanitation

Field Convertible (Gas)

3/4" Gas Connection

351GMCPG48NL

Cooking Performance Group GM-CPG-48-NL 48" Gas Countertop Griddle with Manual Controls - 120,000 BTU

Technical Data

Cooking Surface Material	Polished Steel
Gas Inlet Size	3/4 Inches
Installation Type	Countertop
Number of Burners	4 Burners
Number of Controls	4
Plate Thickness	3/4 Inches
Power Type	Field Convertible Natural Gas
Total BTU	120000 BTU
Type	Griddles
Usage	Medium Duty

Plan View

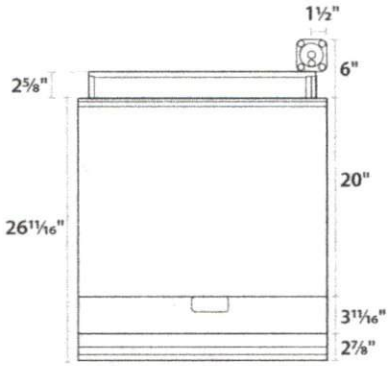

TOP

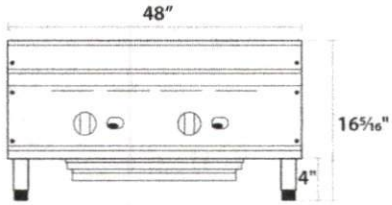

FRONT

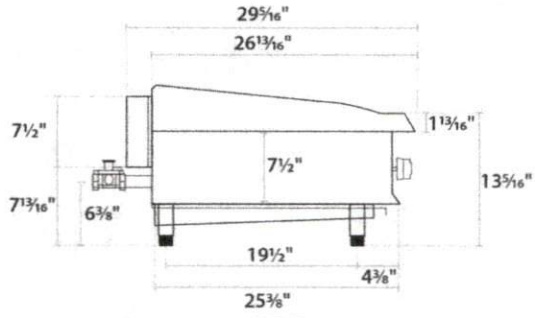

SIDE

351GMCPG48NL

Cooking Performance Group GM-CPG-48-NL 48" Gas Countertop Griddle with Manual Controls - 120,000 BTU

Notes & Details

This Cooking Performance Group GM-CPG-48-NL 48" countertop griddle boasts four powerful 30,000 BTU stainless steel U-shaped burners with standing pilots for instant ignition that make it a fantastic choice for busy snack bars, concession stands and take-out restaurants! Great for burgers, bacon, cheesesteak, and other meats, this unit's manual controls offers added appeal to experienced chefs who prefer the "feel" of manual controls, while the 3/4" thick, 48" wide polished steel cooking surface features an impressive 20" depth that is sure to deliver all of the workspace needed.

The Cooking Performance Group GM-CPG-48-NL countertop griddle is made of stainless steel that is both durable and extremely easy to clean, includes back and side splashes to protect your walls and countertops, and even has a full width waste tray to provide you with a complete package of excellent performance and worry-free maintenance! It has a 3/4" rear gas connection and ships ready to connect to a natural gas supply, but includes a liquid propane orifice kit for simple field conversion.

⚠ **WARNING:** This product can expose you to chemicals including lead, which are known to the State of California to cause cancer, birth defects, or other reproductive harm. For more information, go to www.p65warnings.ca.gov.

Item #: 178CBE48HC Project: _____

Qty: _____ Date: _____ Approval: _____

Avantco Refrigeration

Avantco CBE-48-HC 48" 2 Drawer Refrigerated Chef Base

Item #178CBE48HC

Technical Data

Width	48 3/8 Inches
Depth	32 1/8 Inches
Height	25 13/16 Inches
Power Cord Length	84 Inches
Interior Width	36 5/8 Inches
Packaging Width	50 15/16 Inches
Interior Depth	27 9/16 Inches
Packaging Depth	34 7/8 Inches
Interior Height	16 9/16 Inches
Packaging Height	28 1/2 Inches

Features

- 880 lb. weight capacity; 1 3/4" stainless steel top with marine edge
- Each drawer holds 2 full size food pans, 4" deep
- Stainless steel exterior for durability
- Digital temperature controls for intuitive and simple operation
- 1/3 hp, 115V; R290 refrigerant; 1.6 Amps

Certifications

5-15P ETL Sanitation ETL US & Canada

Avantco Refrigeration

Technical Data

Amps	1.6 Amps
Hertz	60 Hertz
Phase	1 Phase
Voltage	115 Volts
Access Type	Drawers
Base Style	Refrigerator
BTU (LBP)	786 BTU
Capacity	9.6 cu. ft.
Compressor Location	Side Mounted
Drawer Capacity	132 lb.
Features	Automatic Electric Defrost Digital Temperature Controller
Horsepower	1/3 HP
Insulation Material	Polyurethane Foam
Material	Stainless Steel
Maximum Ambient Temperature	90 Degrees F
Net Weight	203 lb.
Number of Drawers	2 Drawers
Plug Type	NEMA 5-15P
Refrigerant Type	R-290
Temperature Range	33 - 40 Degrees F
Top Capacity	880 lb.
Top Material	Stainless Steel
Top Style	Marine Edge
Top Thickness	1.75

Plan View

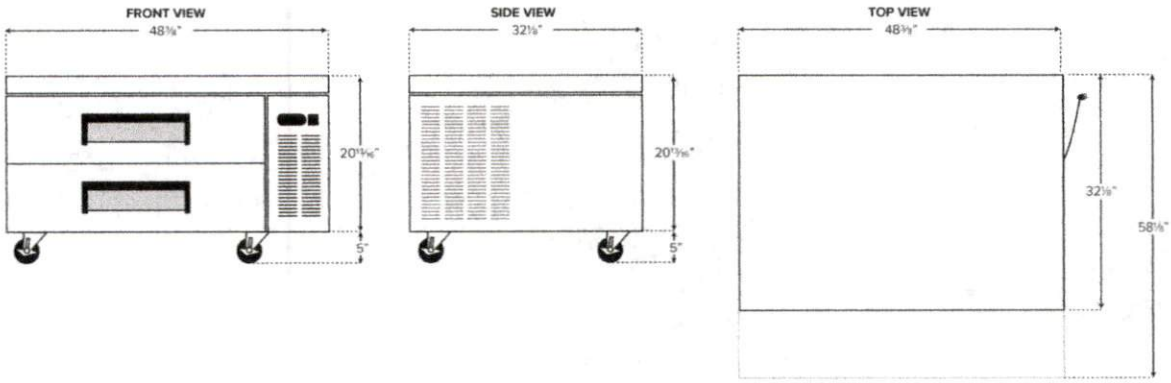

Notes & Details

Provide a convenient place to hold and store cold foods right where they are needed by adding this Avantco CBE-48-HC 48" 2 drawer refrigerated chef base to your kitchen! As a space and productivity solution for your kitchen, this chef base makes it easy to increase efficiency by placing countertop cooking equipment right on top of the chef base where you store your cold ingredients. This base features a durable 1 3/4" stainless steel top that can hold up to 880 lb. of weight. Equipped with a marine edge, the unit's top helps to contain drips and spills for easy cleanup.

Each drawer in this unit can hold up to 2 full size food pans (sold separately). The digital temperature control allows you to set the interior of the unit to hold your prepared foods and ingredients at safe temperatures between 33 and 40 degrees Fahrenheit.

The stainless steel construction adds extended durability in a busy kitchen environment. For greater ease of cleaning, casters come included so that you can move the unit away from the wall. The refrigeration system uses a 1/3 hp compressor and R290 refrigerant. This unit requires a 115V electrical connection.

⚠ **WARNING:** This product can expose you to chemicals including lead, which are known to the State of California to cause cancer, birth defects, or other reproductive harm. For more information, go to www.p65warnings.ca.gov.

Avantco Refrigeration

Project: _____ Date: _____ Approval: _____ Qty: ____ Item #: 60ST3048R

REGENCY
Tables and Sinks

Regency 30" x 48" 16 Gauge Stainless Steel Work Table with Sink - Sink on Right

#60ST3048R

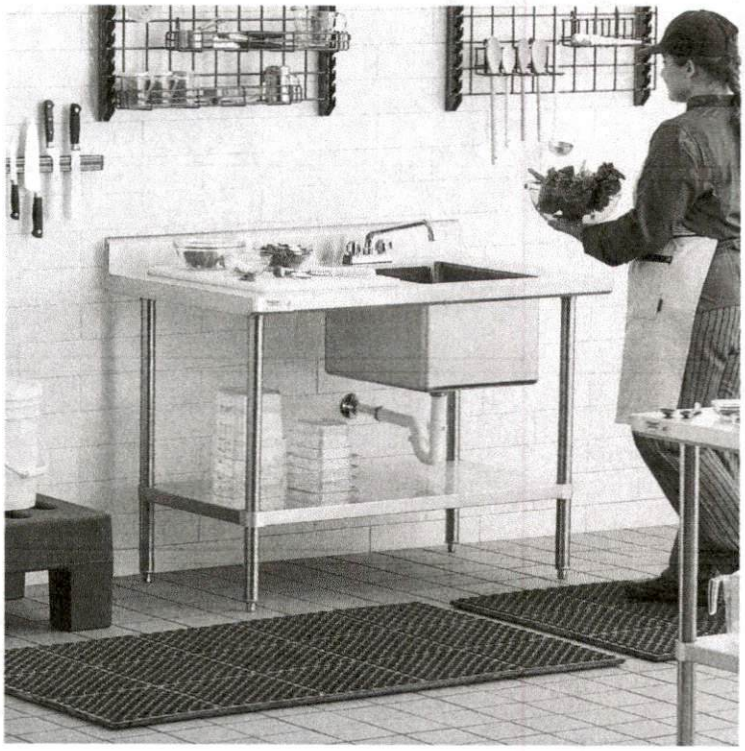

Technical Data

Length	48 Inches
Width	30 Inches
Height	40 1/2 Inches
Spout Length	12 Inches
Bowl Depth	12 Inches
Backsplash Height	5 Inches
Faucet Height	4 7/8 Inches
Work Surface Height	35 1/2 Inches
Backsplash	With Backsplash
Bowl Front to Back	20 Inches

Features

- 16-gauge type 304 stainless steel top offers greater durability and corrosion-resistance
- 16-gauge type 430 stainless steel undershelf and hat channels
- Features a 12" deep stainless steel sink with a deck mounted faucet
- Convenient 5" backsplash protects posterior wall
- Stainless steel legs and sockets for maximum support; adjustable bullet feet

Certifications

NSF **NSF Listed**

Technical Data

Base Style	Table with Sink Undershelf
Bowl Left to Right	16 Inches
Faucet Centers	4 Inches
Features	Customizable Height NSF Listed Sink With Undershelf
Flow Rate	2 GPM
Gauge	16 Gauge
Handle Type	Wrist
Leg Construction	Stainless Steel
Number of Legs	4 Legs
Size	30" x 48"
Spout Clearance	2 11/16 Inches
Spout Type	Swing
Stainless Steel Type	Type 304
Table Style	Undershelf
Tabletop Material	Stainless Steel
Top Capacity	500 lb.
Type	Work Tables with Sink
Undershelf Capacity	370 lb.
Undershelf Construction	Stainless Steel
Usage	Standard Duty
Water Inlet Size	1/2 Inches

Plan View

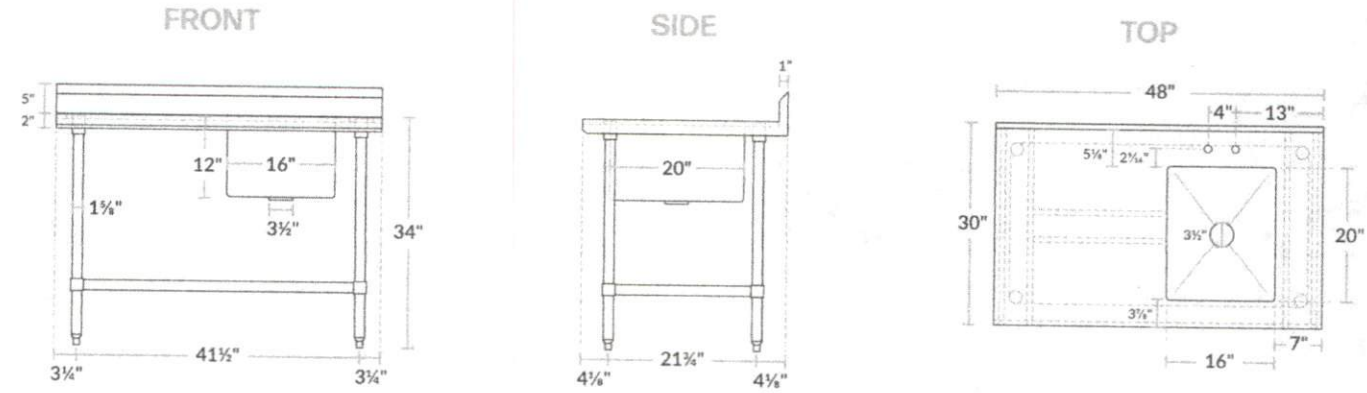

Notes & Details

Complete your commercial kitchen's prep area with this Regency 30" x 48" stainless steel work table with sink! Combining an easy-to-clean, 16 gauge type 304 stainless steel top with a 12" deep sink, this unit is designed to streamline your workflow for maximum efficiency and convenience. Not only does this unit provide plenty of room on its work surface, but it also offers an 18 gauge type 430 stainless steel undershelf secured with aluminum die cast clamps to supply storage space for keeping scales, cutting boards, food storage boxes, and other kitchen appliances within easy reach.

With its integrated 16" x 20" sink, this unit allows you to easily rinse ingredients or wash your hands as you are completing other tasks on the table's work surface. Its 12" deck mounted swing faucet with 4" centers provides excellent clearance, and the included 3 1/2" drain basket has a 1.5" IPS Drain connection and helps collect excess waste particles to eliminate the possibility of clogging. Plus, a 5" backsplash protects your walls from splashes and spills while also preventing items from falling behind the table.

For unparalleled stability, this work table features stainless steel bullet feet and leg sockets that allow you to place the table on uneven floors. Plus, the unit is supported by stainless steel legs and hat channels, providing a solid foundation and long-lasting reliability.

⚠ **WARNING:** This product can expose you to chemicals including Nickel and Lead, which are known to the State of California to cause cancer, birth defects, or other reproductive harm. For more information, go to www.p65warnings.ca.gov.

Item #: 178UDD3788 Project: _____

Qty: _____ Date: _____ Approval: _____

Avantco Black Kegerator / Beer Dispenser with 2 Quadruple Tap Towers (4) 1/2 Keg Capacity

Item #178UDD3788

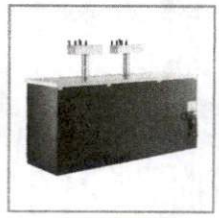

Technical Data

Width	79 Inches
Depth	27 3/4 Inches
Height	35 5/8 Inches
Power Cord Length	108 Inches
Interior Width	66 3/8 Inches
Interior Depth	21 7/8 Inches
Nominal Depth	Standard
Faucet Height	11 Inches
Interior Height	30 1/2 Inches
Tap Tower Height	17 Inches

Features

- (2) 3" stainless steel "T" towers, each with 4 chrome-plated brass faucets
- 4 shelves included for optional bottle and can storage; LED interior lighting
- Includes (8) "D" system couplers that connect to your gas hose, beer hose, or keg valve
- Each tower includes 4 hoses and mounting hardware
- 115V; 1/2 hp compressor; R290 refrigerant

Certifications

ETL Sanitation ETL, US 5-15P

Avantco Refrigeration

Avantco Refrigeration

Technical Data

Tap Tower Diameter	3 Inches
Amps	4.1 Amps
Hertz	60 Hertz
Phase	1 Phase
Voltage	115 Volts
Wattage	385 Watts
Capacity	25.8 cu. ft.
Color	Black
Compressor Location	Left Side Mounted
Compressor Style	Side / Rear Breathing
Door Type	Solid
Exterior Finish	Black / Stainless Steel
Features	LED Lighting Removable Magnetic Door Gaskets
Horsepower	1/2 HP
Individual Shelf Capacity	88 lb.
Number of Doors	3 Doors
Number of Kegs	4 Kegs
Number of Shelves	4 Shelves
Number of Taps	8+ Taps
Plug Type	NEMA 5-15P
Refrigerant Type	R-290
Starting Amps	12.3 Amps
Starting Wattage	1155 Watts
Style	1/2 Barrel
Top Capacity	353 lb.
Type	Kegerators / Beer Dispensers

Avantco Refrigeration

Plan View

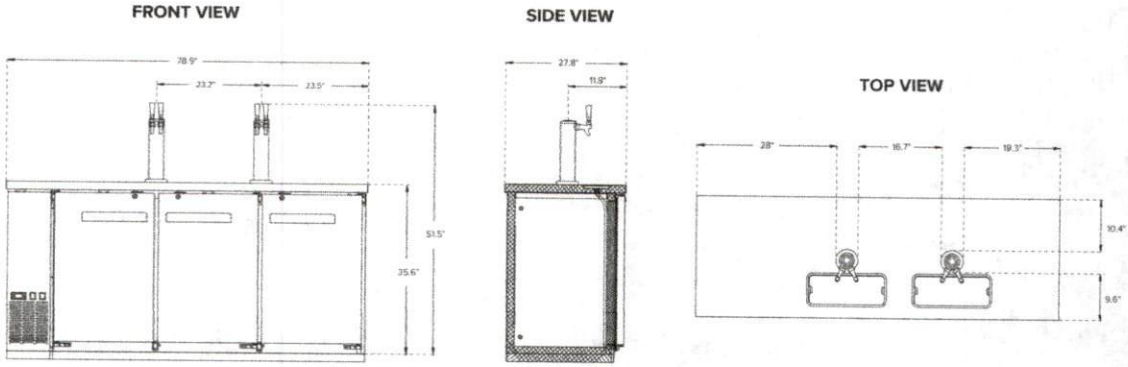

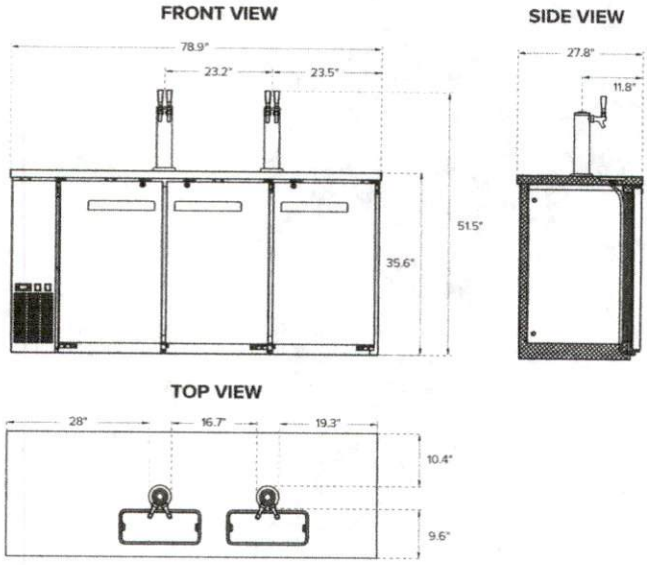

Avantco Refrigeration

Notes & Details

Whether you operate a pub, banquet hall, catering service, or facilitate other special events, this Avantco black beer dispenser is an excellent way to offer crisp, refreshing draft beer to your guests without investing in a complex built-in tap system! This unit features 2 quadruple tap towers with a 11" faucet height that allows you to easily fill pint glasses and pitchers with local microbrews, international macrobrews, and everything in between. Each tower is made from stainless steel with a polished chrome finish and is air-cooled to keep all your beers chilled to perfection. Plus, each tower comes with 4 hoses to get the beer flowing right away. As an added bonus, 2 double tap towers are also included, which allow you to switch the tower configuration as your needs change!

The dispenser cabinet holds (4) 1/2 kegs so you can stock up on one brew or offer customers a selection to choose from, and it even comes with 4 shelves for optional bottle or can storage. The doors themselves are not only self-closing to prevent potential energy loss, but also lock to prevent theft during off hours. This unit is equipped with knockout plugs to install external CO2 lines.

Unlike many competitive beer dispensers, this model ships with "D" system couplers so that you can tap kegs right out of the box! Built into each coupler, an integrated pressure relief valve provides you with added safety and peace of mind by ensuring the gas flow is cut off if the pressure gets too high.

This commercial kegerator features a black coated steel exterior and a 304 type stainless steel interior that is both durable and easy to clean, while a built-in drip tray further expedites end-of-day cleaning. It has a 1/2 hp refrigeration system that circulates R-290 hydrocarbon refrigerant. R290 refrigerant has an ozone depletion potential (ODP) of 0 and a global warming potential (GWP) of 3. A 115V electrical connection is required for operation.

⚠ **WARNING:** This product can expose you to chemicals including lead, which are known to the State of California to cause cancer and birth defects or other reproductive harm. For more information, go to www.p65warnings.ca.gov.

Steelton

Project _____

Item 522B11014 Quantity _____

Approval _____ Date _____

Steelton 15" Underbar Dump Sink - 10" x 14" x 10" Bowl

Item #522B11014

Special Features

- Features a 2" drain, 1 1/2" IPS drain baskets, and 4" centers
- Made of high-quality 18 gauge, type 304 stainless steel
- Sturdy galvanized steel legs
- Ideal place for employees to dump discarded drinks and other liquids
- Underbar design for maximum space efficiency

Technical Data

Length	15 Inches
Width	18 3/4 Inches
Height	33 Inches
Bowl Depth	10 Inches
Backsplash Height	3 Inches
Backsplash	With Backsplash
Bowl Front to Back	14 Inches
Bowl Left to Right	10 Inches
Faucet Centers	4 Inches
Features	NSF Listed

Certifications

NSF **NSF Listed**

Technical Data

Gauge	18 Gauge
Leg Construction	Galvanized Steel
Material	Stainless Steel
Number of Bowls	1 Bowl
Number of Compartments	1 Compartment
Number of Drainboards	None
Stainless Steel Type	Type 304
Type	Bar Sinks

Technical Drawing

#522B11014

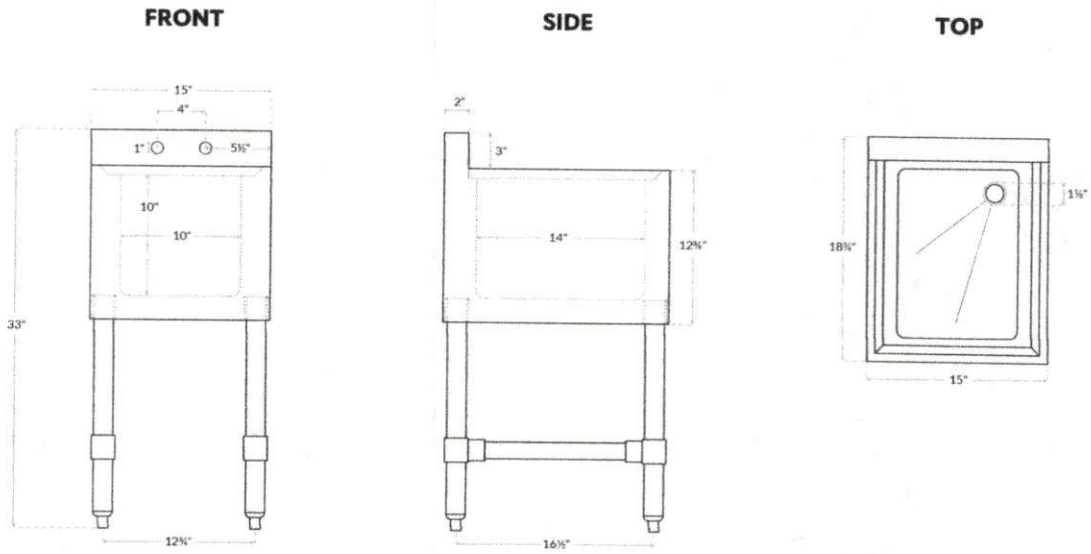

⚠ **WARNING:** This product can expose you to chemicals including lead, which are known to the State of California to cause cancer, birth defects, or other reproductive harm. For more information, go to www.p65warnings.ca.gov.

Item #: 178UBB48GHC Project: _____

Qty: _____ Date: _____ Approval: _____

Avantco Refrigeration

Avantco UBB-48G-HC 48" Black Counter Height Narrow Glass Door Back Bar Refrigerator with LED Lighting

Item #178UBB48GHC

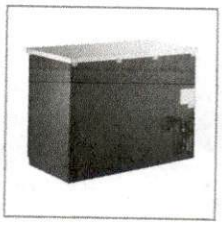

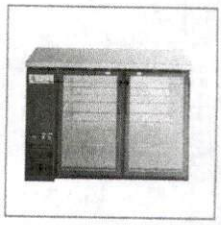

Technical Data

Width	48 3/4 Inches
Depth	24 7/16 Inches
Height	36 1/4 Inches
Power Cord Length	102 Inches
Interior Width	36 1/4 Inches
Left Door Opening Width	16 7/16 Inches
Packaging Width	51 1/4 Inches
Right Door Opening Width	16 7/16 Inches
Shelf Width	17 5/8 Inches
Interior Depth	18 1/2 Inches

Features

- Durable stainless steel countertop and interior with black-coated steel exterior
- LED interior lighting
- Four adjustable epoxy-coated steel shelves can be removed to fit two 1/2 kegs
- Preprogrammed digital temperature controls feature auto-defrost for easy setup and maintenance
- 115V; 3/7 hp; 2 Amps; R290 refrigerant

Certifications

ETL US 5-15P ETL Sanitation

Avantco Refrigeration

Technical Data

Nominal Depth	Narrow
Packaging Depth	27 1/2 Inches
Shelf Depth	18 1/8 Inches
Interior Height	30 1/2 Inches
Packaging Height	41 3/4 Inches
Amps	2 Amps
Hertz	60 Hertz
Phase	1 Phase
Voltage	115 Volts
Access Type	Doors
BTU (LBP)	974 BTU
Capacity	(2) 1/2 Kegs 13 cu. ft.
Casters	Without Casters
Compressor Location	Side Mounted
Countertop Type	Stainless Steel
Door Style	Swing
Door Type	Glass
Exterior Finish	Black
Features	Automatic Electric Defrost Digital Temperature Controller Food Rated LED Lighting
Horsepower	3/7 HP
Individual Shelf Capacity	90 lb.
Insulation Material	Polyurethane Foam
Material	Black Coated Steel / Stainless Steel
Maximum Ambient Temperature	90 Degrees F
Net Weight	231 lb.
Number of Doors	2 Doors
Number of Kegs	2 Kegs
Number of Shelves	4 Shelves
Plug Type	NEMA 5-15P
Refrigerant Type	R-290
Shelf Material	Epoxy-Coated Steel
Temperature Range	33 - 40 Degrees F
Top Type	Counter Height

Plan View

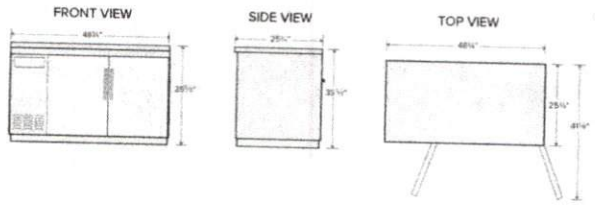

Notes & Details

Optimize the space behind your bar by adding refrigerated storage with this Avantco 48" counter height narrow back bar refrigerator! Providing 13 cu. ft. of interior storage space, the unit fits up to (2) 1/2 kegs and houses (4) 17 5/8" x 18 1/8" shelves that each accommodate up to 90 lb. The epoxy-coated steel shelves are perfect for storing and organizing beverages for your bar service, from bottles of ale and beer to cans of crisp ciders. Plus, with a narrow design, the unit fits in spaces other units can't, helping you to maximize the space you have available.

The interior, made of strong 304 type stainless steel, is accessible through two glass doors. Because they're made of glass, the doors provide excellent product visibility, enabling you to easily view your current drink or ingredient selection for efficient drink preparation. For overall durability, the unit's exterior is made with black coated steel and is topped with a type 304 stainless steel surface.

This back bar refrigerator ensures optimal performance by operating with a 3/7 hp refrigeration system that circulates R290 hydrocarbon refrigerant to maintain temperatures from 33 to 40 degrees Fahrenheit. R290 refrigerant has an ozone depletion potential (ODP) of 0 and a global warming potential (GWP) of 3. The foamed-in-place polyurethane insulation helps to trap in the cold air and to prevent the ambient air from entering. This ensures that all food held in the unit remains at food safe temperatures and ready for preparation or direct service to customers! The unit requires a 115V electrical connection for operation and even comes with adjustable feet for simple, convenient leveling.

⚠ **WARNING:** This product can expose you to chemicals including lead, which are known to the State of California to cause cancer, birth defects, or other reproductive harm. For more information, go to www.p65warnings.ca.gov.

Avantco Refrigeration