HARNETT COUNTY PLAN REVIEW APPLICATION COVER LETTER
FOOD SERVICE ESTABLISHMENTS
CHANGE OF OWNERSHIP

Potential owners are required to complete this application so we may collect the necessary information for the purpose of issuing a permit for an establishment that may have or has changed ownership. All questions must be completed so that we can determine if any operational changes may occur or if the type of food preparation will be modified. A proposed menu must be submitted with this application

This application will be reviewed using North Carolina's 15A NCAC 18A .2600 *Rules Governing the Food Protection and Sanitation of Food Establishments* and the *NC Food Code Manual.* To view these rules, go to http://www.deh.enr.state.nc.us/rules.htm or obtain a copy from our office at 307 West Cornelius Harnett Boulevard, Lillington, NC 27546. This application must be submitted to the local health department for approval **prior to** the change of ownership.

Submit completed application to: Central Permitting, 420 McKinney Pkwy., Lillington, NC 27546

If you have questions, contact one of the following Food and Lodging staff listed below at 910-893-7547:

Gale Violette, REHS
Food and Lodging Program Specialist

Jamie Turlington, REHS
Environmental Health Specialist

Cindy Pierce, REHS
Environmental Health Specialist

Nikki Eason, REHS
Environmental Health Specialist

Plans must be submitted with the following supporting documentation:

✓ A proposed menu
✓ A completed Food Service Plan Review Application/Change of Ownership
✓ A site plan drawn to scale showing the placement of each piece of food service equipment, storage areas, trash can wash facilities, etc.

05/21
gv

Cindy

Thank you for your time & patience.

Brandy Taylor

404-312-4278

brandy@LostPaddlePizza.com

Food Service Plan Review Application

Name of Establishment: Lost Paddle Pizza
Physical Address: 100 South Main St.
City: Lillington State: NC Zip: 27546
Phone (if available): 40 Fax: _____
Email: LostPaddlePizza@gmail.com

Applicant: Brandy Taylor
Address: 113E. Spring St.
City: Fuquay-Varina State: NC Zip: 27526
Phone: 404-312-4278 Fax: _____
Email: _____

Owner (if different from Applicant): _____
Address: _____
City: _____ State: _____ Zip: _____
Phone: _____ Fax: _____
Email: _____

I certify that the information in this application is correct, and I understand that any deviation without prior approval from this Department may nullify plan approval.

Signature: _____ **Date:** _____
(Applicant or Responsible Representative)

Hours of Operation:

Mon 10-9 Tues 10-9 Wed 10-9 Thurs 10-9 Fri 10-10 Sat 10-10 Sun 10-9

Number of Seats: 70

Facility total square feet: 2,8224

Projected start date: 4/1/22

Type of Food Service:

- ✓ Restaurant
- _____ Food Stand
- _____ Drink Stand
- _____ Commissary
- _____ Meat Market
- _____ Other (explain): _____

Check all that apply

- ✓ Sit down meals
- ✓ Take-out meals
- _____ Catering

Utensils:

Multi-use (reusable): ✓ Single-use (disposable): _____

Food delivery schedule (per week): MONDAY / THURS

Indicate any **specialized process** that will take place:

_____ Curing _____ Acidification (sushi, etc.) _____ Smoking

N/A _____ Reduced Oxygen Packaging (e.g. vacuum packaging, sous vide, cook-chill, etc.)

Has the process been approved by the Variance Committee of the DPH Food Protection Branch? _____

Indicate any of the following **highly susceptible populations** that will be catered to or served:

N/A _____ Nursing/Rest Home _____ Child Care Center _____Health Care Facility

_____ Assisted Living Center _____ School with pre-school aged children or an immunocompromised population

Water Supply:

Type of water supply: (check one)

- ☐ Non-public (well)
- ☒ Community/Municipal

Is an annual water sample required of your establishment? (check one)

- ☐ Yes
- ☒ No

Wastewater System:

Type of wastewater system: (check one)

- ☒ Public sewer
- ☐ On-site septic system

Water Heater:

Manufacturer and Model: State Industries SBD 81190NE

Storage Capacity: 81 gallons

- Electric water heater: ~~[illegible]~~ kilowatts (kW)
- Gas water heater: 190000 BTU's

Water heater recovery rate: 184 GPH

If tankless, _____ GPM ; Number of heaters: _____

Person in Charge (PIC) and Employee Health

Are Persons in Charge certified food protection managers who have passed a test accredited by an approved ANSI program? YES

Eligible Person In Charge: Brandy Taylor

Program ServeSafe Cert. # 17437468 Exp. Date 2/4/24

For multiple shifts and/or occasions of absences, list all eligible Persons in Charge:

Eligible Person In Charge: Melissa Smith

Program ServeSafe Cert. # 20365359 Exp. Date 3/23/26

Eligible Person In Charge: [redacted]

Program [redacted] Cert. # _____ Exp. Date [redacted]

*Attach a copy of your establishment's Employee Health Policy

Are copies of signed Employee Health Policies on file? N/A

Food Sources

Names of food distributors:	Deliveries/wk
1. DFG	2
2.	
3.	
4.	

Time/Temperature Control for Food Safety

Foods that will be held **hot** before serving: CHILI, ALL ELSE WILL BE COOKED TO ORDER

Foods that will be held **cold** before serving: Cheese, ONIONS, MARINARA, Celery, Cucumbers, Tomatos, HAM, Peppers, Sauces that require refrigeration,

Will **time** be used as a method to control for food safety? YES
Will a buffet be provided? NO If so, attach a list of foods that will be on the buffet.

Cooling

List foods that will be cooked and cooled for later use or added to another food as an ingredient: chili

Describe utensils and methods used to cool foods: SANDWICH & Pizza Tables, WALK IN & Reach IN coolers

Dry Storage

Frequency of deliveries per week: 2 Number of dry storage shelves: 4

Square feet shelf space: 144 ft^2

Is a separate room designated for dry storage? YES

Food Preparation Facilities

Number of food prep sinks: 1 Are separate sinks provided for vegetables and meats? YES
Size of sink drain boards (inches): 22 3/4 X 26

How will sinks be sanitized after use or between meat species? MEAT WILL BE PREPPED ON A SEPARATE DUNNAGE RACK. CLEANED WITH SOAP WATER & SANITIZED WITH A QUATERNARY SANITIZER

Dishwashing Facilities

Manual Dishwashing

Number of sink compartments: 3

Size of sink compartments (inches): Length 24 Width 18 Depth 14

Length of drain boards (inches): Right 22 3/4 Left 26

Are the basins large enough to immerse your largest utensil? yes

What type of sanitizer will be used?

Chlorine _____ Quaternary ✓ Hot water (171°F)_____ Other (specify) _____

Mechanical Dishwashing

Will a dishmachine be used? Yes Y No _____

Dishmachine manufacturer and model: waiting on delivery / Available

Hot water sanitizing ? _____ or chemical sanitizing? _____

How will large utensils such as prep tables, dough mixing bowls, slicers, and other food contact surfaces that cannot be submerged in sinks or put through a dishwasher be cleaned and sanitized? All items can be submerged or put through dishwasher

How many air drying shelves will you have? 4

Calculate the square feet of total air drying space: 12 ft^2

Hand washing

Indicate number and locations of hand sinks in the establishment:

1- Next to dish washing sinks

2- At bar area

Employee Area

Indicate location for storing employees' personal items: Office Area

Near patio

Garbage, Refuse and Other

Will trash be stored in the restaurant overnight? Yes _____ No X If so, how will it be stored to prevent contamination? ~~NA~~

Location and size of can wash facility: kitchen 16" x 10"

Are hot and cold water provided as well as a threaded nozzle? Yes

Will a dumpster be provided? Yes

Do you have a contract with the dumpster provider for cleaning? Yes

How will used grease be handled? GREASE DISPOSAL CONTAINER / Pickup by 3rd PARTY OIL COMPY

Is there a contract for grease trap cleaning? Yes

Are doors self-closing? Yes Fly fans provided? YES

Where will chemicals be stored? Chemical Rack in Dry Storage

Where will clean linen be stored? Office Area near patio

Where will dirty linen be stored? Office Area near patio

Food Handling Procedures
To be used as attachment to application (page9/10)

1.How will the food arrive?
2.Where will food be stored?
3.How and where thawed?
4.Prep area?
5.Time/Frequency of food handling
6.Will food be used in secondary dish?
7. Cooling procedures if applicable

Food Product:
Wings
1.Frozen
2.Cooler after thawing
3.Thawing pans in cooler
4. Prep table and prep sink
5. Produce am/pm prep, cook to order
6. Food will not be used in a future dish
7. Non-shelf items will be stored in cooler, frozen items in freezer

Food Product:
Nachos
1. Fresh beef, buns and produce
2. Cooler, dry storage
3.N/A
4. Prep table and prep sink
5. Produce am/pm prep, cook to order
6. Food will not be used in a future dish
7. Non-shelf items will be stored in cooler, frozen items in freezer

Food Product:
House Salad
1. Whole Fresh produce
2.Cooler
3.N/A
4. Prep table and prep sink
5. Produce am/pm prep, cook to order
6. Food will not be used in a future dish
7. Non-shelf items will be stored in cooler

Food Product:
Pizza
1. Frozen Dough, shelf stable sauces, fresh produce
2. Cooler after thawing
3. Thawing pans in cooler
4. Prep table and prep sink
5. Produce am/pm prep, cook to order
6. Food will not be used in a future dish
7. Non-shelf items will be stored in cooler, frozen items in freezer

Food Product:
Burgers
1. Fresh beef, buns and produce
2. Cooler, bread storage
3. N/A
4. Prep table and prep sink
5. Produce am/pm prep, cook to order
6. Food will not be used in a future dish
7. Non-shelf items will be stored in cooler, frozen items in freezer

Food Product:
Sub/Deli Sandwiches
1. deli meat, buns and produce
2. Cooler, bread storage
3. N/A
4. Prep table and prep sink
5. Produce am/pm prep, cook to order
6. Food will not be used in a future dish
7. Non-shelf items will be stored in cooler, frozen items in freezer

Food Product:
Meatball Sub
1. Fresh beef, buns and produce, shelf stable sauce
2. Cooler, bread storage
3. N/A
4. Prep table and prep sink
5. Produce am/pm prep, cook to order
6. Food will not be used in a future dish
7. Non-shelf items will be stored in cooler, frozen items in freezer

FOOD HANDLING PROCEDURES

Explain the following with as much detail as possible. Complete descriptions including specific areas of the kitchen and corresponding items on the plan where food is handled will expedite the plan review process. Incomplete descriptions may result in the application being returned.

Explain the entire food handling procedure for each food item on the proposed menu. Including:

- How the food will arrive (frozen, fresh, packaged, etc.)
- Where the food will be stored
- Where and how the food will be thawed
- Where (prep tables, sink, counter, etc.) the food will be handled (washed, cut, marinated, breaded, cooked, etc.)
- When (time of day and frequency/day) food will be handled
- Whether or not the food or any part of the food will be used as leftovers or as any ingredient in a future dish
- How the food will be cooled if applicable

FOOD PRODUCT _____

_____
_____
_____
_____
_____
_____
_____
_____
_____
_____
_____
_____

FOOD PRODUCT _____

_____
_____
_____
_____
_____
_____
_____
_____
_____
_____
_____
_____


635 ft²
25' 5"
25' 0"
1279 ft²
25' 0"
25' 5"
25' 0"
25' 5"
25' 0"
17' 5"
50' 0"
50' 6"
50' 8"
10' 7"
512 ft²
Bar
199 ft²
12' 7"
12' 7"
12' 0"
15' 10"
15' 10"
16' 4"
10' 1"
10' 1"

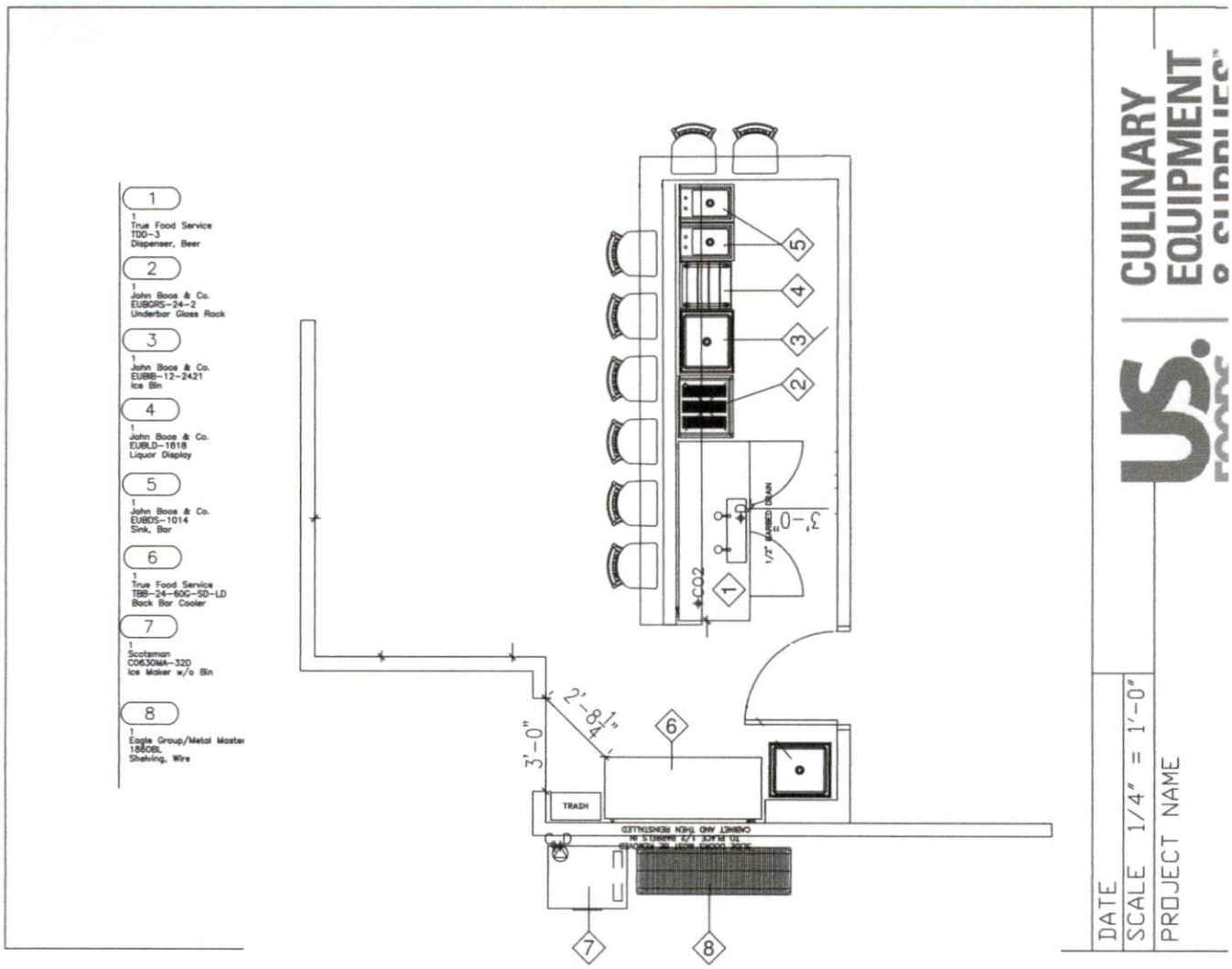
1
1
True Food Service
TDD-3
Dispenser, Beer
2
1
John Boos & Co.
EUBGRS-24-2
Underbar Glass Rack
3
1
John Boos & Co.
EUBIB-12-2421
Ice Bin
4
1
John Boos & Co.
EUBLD-1818
Liquor Display
5
1
John Boos & Co.
EUBDS-1014
Sink, Bar
6
1
True Food Service
TBB-24-60G-SD-LD
Back Bar Cooler
7
1
Scotsman
C0630MA-32D
Ice Maker w/o Bin
8
1
Eagle Group/Metal Master
1880BL
Shelving, Wire
CO2
1/2" BARRED DRAIN
3'-0"
2'-8 1/4"
3'-0"
TRASH
CABINET AND TRASH REMOVALLED
TO PLACE 1/2 BARRELS IN
STORE COOKS WITH SE REMOVED
CULINARY
EQUIPMENT
& SUPPLIES
DATE
SCALE 1/4" = 1'-0"
PROJECT NAME


199 ft²
1279 ft²
512 ft²
635 ft²
Bar

BLODGETT

961/966

Double Gas Deck Oven

OPTIONS AND ACCESSORIES
(AT ADDITIONAL CHARGE)

- **Flexible gas hose with quick disconnect and restraining device**
  - ❑ 36" (914 mm)
  - ❑ 48" (1219mm)
- ❑ QHT Rokite deck 1-1/2" (38.1mm) thick pizza type deck
- ❑ Steam jets
- ❑ FDTH 300° to 650° temperature thermostat

OPTIONS AND ACCESSORIES
(AT NO ADDITIONAL CHARGE)

- ❑ Centigrade dial, 100°C to 300°C

Project _____

Item No. _____

Quantity _____

961/966 - DOUBLE

Ovens consist of basic sections and are a complete and separate unit capable of operating alone or in combination. All data is shown per oven section, unless otherwise indicated.

Refer to operator manual specification chart for listed model names.

EXTERIOR CONSTRUCTION

- Full angle iron frame
- Stainless steel front, top, sides and back
- Counterbalanced doors with concealed hinges
- Heavy chrome plated tubular steel door handle
- 7" (178mm) stainless steel legs are adjustable for leveling
- Burner doors open easily for ignition, cleaning or adjustment, without removal of any fastenings
- Vitreous fiber insulation at top, back, sides, bottom and doors.

INTERIOR CONSTRUCTION

- (1 - 961) 42" x 32" x 7" (1067mm x 813mm x 178mm)
  (1 - 966) 42" x 32" x 16-1/4" (1067mm x 813mm x 413mm) oven compartment interior
- Aluminized steel baking compartment liner
- Aluminized steel combustion chamber
- Steel deck supported by an angle iron frame
- 12 gauge (3.02mm) press-formed, reinforced and flanged aluminized steel deck

OPERATION

- Free-floating, easily removable duplex-tube burner
- Removable fixed orifices on main and pilot burner
- Main gas valve, temperature control valve and safety pilot valve fully within section body and are accessible through a covered and ventilated compartment in front.
- Air mixers with adjustable air shutters and locking device
- Liquid pressure thermostat with temperature control range of 200°F (93°C) to 500°F (288°C)

STANDARD FEATURES

- Fahrenheit dial 200°F to 500°F
- Vent kit
- Large crown angle trim
- Double connector for stacking
- Steel oven deck
- Two year parts and one year labor warranty
- Five year limited oven door warranty*

** For all international markets, contact your local distributor.*

NOTE: The company reserves the right to make substitutions of components without prior notice

Intertek

0539

P/N 35034 Rev X (4/19)

www.blodgett.com
42 Allen Martin Drive, Essex Junction, VT 05452
Phone: (802) 658-6600 | Fax: (802) 864-0183

BLODGETT

961/966 DECK OVEN

APPROVAL/STAMP

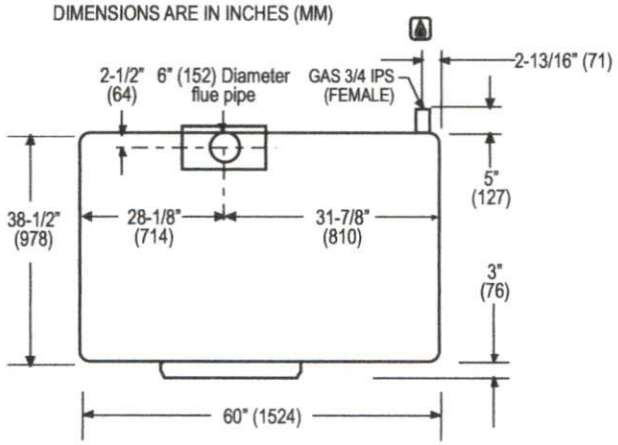

TOP VIEW

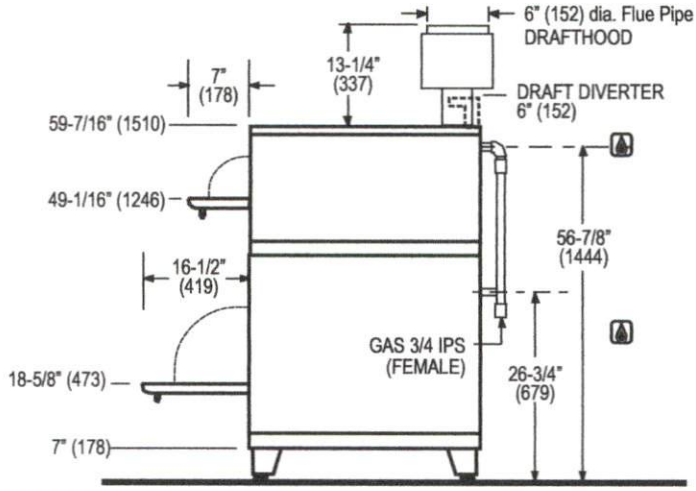

SHORT FORM SPECIFICATIONS Provide Blodgett combination deck oven, model 961/966. Each unit shall be a combination of two independent ovens with single, manifolded gas connections and flues. Construction shall be welded stainless steel top, front, back and sides, and shall be fully insulated on all sides. Ovens shall be supported by 7" high formed adjustable legs. Doors shall be counterbalanced (no springs) with concealed hinges and chrome plated tubular steel handles. Separate burner door provided for ignition, cleaning and adjustment. The upper section baking compartment shall be 42" W x 7" H x 32" D; the lower section baking compartment shall be 42" W x 16-1/4" H x 32" D. Both shall be lined with aluminized steel, and decks shall be of 11 gauge press-formed, reinforced and flanged steel. Each section shall be gas heated by a free-floating, easily removable, duplex-type burner controlled by a liquid pressure thermostat with range of 200°F to 500°F. Provide with two year parts and one year labor warranty. Provide with options and accessories as indicated.

DIMENSIONS

Floor space	60" (1524mm) wide x 40" (1016mm) deep
Cooking Compartment (per section)	
Top section	42" (1067mm) W x 7" (178mm) H x 32" (813mm) D
Bottom section	42" (1067mm) W x 16-1/4" (413mm) H x 32" (813mm) D
Area per section	9.34 sq. ft. (0.87m2)
Total area	18.68sq. ft. (1.74m2)

SECTION DETAILS

Number of section	2
Number of controls	2
Number of compartments	2

PRODUCT CLEARANCE

From combustible and non-combustible construction

6" (152 mm)

PAN CAPACITES

10" (254mm) pie tins:	24
18" x 26" (457mm x 660mm) bun pans	4
9-1/2" x 5" (241mm x 127mm) bread pans	48
9" x 7" (228mm x 178mm) roll pans	32
19" x 4" (483mm x 102mm) pullman pans	28
13" x 16-1/2" (330mm x 419mm) cup tins	18
20" x 28" (508mm x 711mm) roast pans	4
No. 200 pans (324mm x 527mm)	8
#1 bean pot	70
#2 bean pot	40
#3 bean pot	24
25 lb (11 kg) turkeys	5

GAS SUPPLY (per section)

3/4" NPT

Inlet Pressure

Natural Gas	7.0" W.C. min. - 10.5" W.C. max.
Propane	11.0" W.C. min. - 13.0" W.C. max.

Manifold Pressure

Natural Gas	5" W.C.
Propane	10" W.C.

MAXIMUM INPUT

961	37,000 BTU/hr
966	50,000 BTU/hr
961/966	87,000 BTU/hr

MINIMUM ENTRY CLEARANCE

Uncrated	32-1/2" (826mm)
Crated	37" (940mm)

SHIPPING INFORMATION

Approx. Weight

961	540 lbs. (245kg)
966	630 lbs. (286kg)
961/966	1170 lbs. (531kg)

Crate Sizes

65" (1651mm) x 27" (686mm) x 46.5" (1181mm)

65" (1651mm) x 37" (940mm) x 46.5" (1181mm)

Harnett County Fire Marshals Office

Harnett County Emergency Services

Occupancy: **Lost Paddle**
Occupancy ID: **4300HOWA000001**
Address: **100 S MAIN ST**
LILLINGTON NC 27546
Inspection Type: **110 - Consultation, Fire Protection**
Inspection Date: **3/29/2022** By: Tschida, Don (9379)
Time In: **13:00** Time Out: **13:30**
Authorized Date: **03/29/2022** By: Tschida, Don (9379)

Form: Consultation

Inspection Description:

Basic Questionnaire to be utilized when recording a consultation.

Inspection Topics:

Scope of Project

Scope of Proposed Project

Give a brief explanation of the project or purpose of consultation.

Status: N/A
Notes: Consultation with new owners of restaurant. Advised of the following with reference to the fire code:
Check emergency lights monthly for 30 seconds and annually for 90 minutes. Keep documentation of tests.
Hood suppression system shall be serviced every 6 months with documentation.
Hood shall be cleaned every 6 months with documentation.
Extinguishers shall be serviced annually.
Maintain 36" of clearance in front of electrical panels.
Discussed adequate exit discharge using front and back door. Discussed how closing off the back porch would change exit configuration and occupancy load.
Discussed the use of fused power strips. Power strips shall be plugged directly into an electrical outlet.

Additional Time Spent on Inspection:

Category	Start Date / Time	End Date / Time

Notes: No Additional time recorded

Total Additional Time: 0 minutes
Inspection Time: 30 minutes
Total Time: 30 minutes

Summary:

Overall Result: Consultation Completed

Inspector Notes:

Inspector:

Name: Tschida, Don
Rank: Deputy Fire Marshal
Work Phone(s): None on file