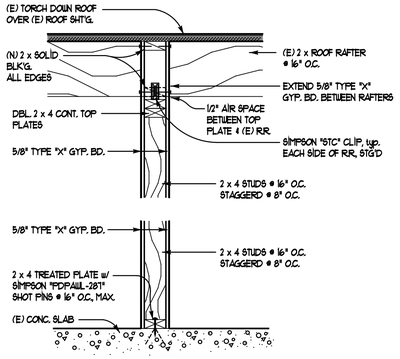

Section View

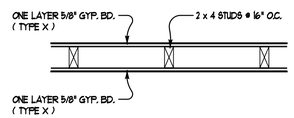

Plan View

Joints & Nail-Heads

JOINTS STAGGERED 24" ON OPPOSITE SIDES

Gypsum Board

ONE LAYER 5/8" TYPE "X" GYPSUM WALLBOARD or GYPSUM VENEER BASE APPLIED PARALLEL or AT RIGHT ANGLES TO EACH 2 x 4 WOOD STUDS @ 16" O.C., NAILED WITH 6d COATED NAILS, 1 7/8" LONG, Ø.0939 SHANK, 1/4" HEADS @ 7" O.C.

1 HOUR RATED WALL ASSEMBLY NON-BEARING WALL FRAMING

190005-404A (4A) 1"=1'-0"

10/01/2019 12:56 WALL FRMTG. @ UL U314 ICC-ES-ESR-2138 SIMPSON SHOT PIN

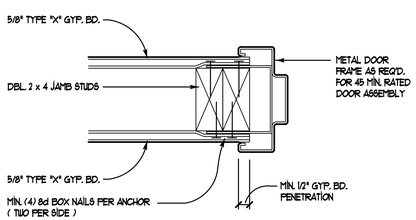

1 HOUR RATED WALL ASSEMBLY AT 45 MINUTE DOOR ASSEMBLY

190005-405 (5) 3"=1'-0"

10/01/2019 12:56

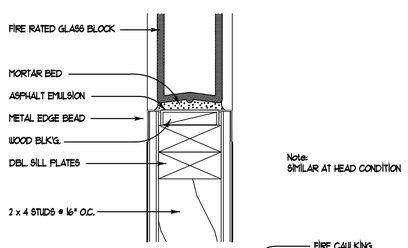

1 HOUR RATED WALL ASSEMBLY AT 45 MINUTE GLASS BLOCK WDW

190005-406 (6) 3"=1'-0"

10/01/2019 12:56

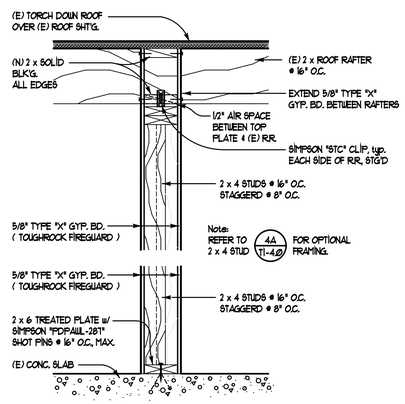

Section View

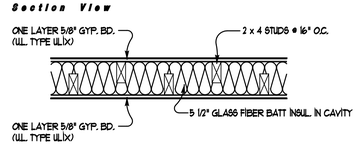

Plan View

Joints & Nail-Heads

JOINTS COVERED WITH JOINT COMPOUND and PAPER TAPE. NAIL HEADS SHALL NOT BE EXPOSED and SHALL BE COVERED WITH JOINT COMPOUND.

Gypsum Board

5/8 INCH TOUGHROCK FIREGUARD "X" or 5/8 INCH DENSARMOR PLUS FIREGUARD GYPSUM PANELS APPLIED VERTICALLY or HORIZONTALLY TO EACH SIDE OF 2 x 4 STUDS at 16" O.C. STAGGARED ON 2 x 6 WOOD PLATES WITH 1-7/8 INCH 6d COATED NAILS 7 INCHES ON CENTER. WALLBOARD NAILED TO TOP and BOTTOM PLATES 7 INCHES ON CENTER, STAGGER JOINTS EACH SIDE. HORIZONTAL BRACING REQUIRED AT MID HEIGHT.

1 HOUR RATED WALL ASSEMBLY NON-BEARING WALL FRAMING

190005-404 (4) 1"=1'-0"

10/01/2019 12:56 WALL FRMTG. @ GA WP 5513 ICC-ES-ESR-2138 SIMPSON SHOT PIN

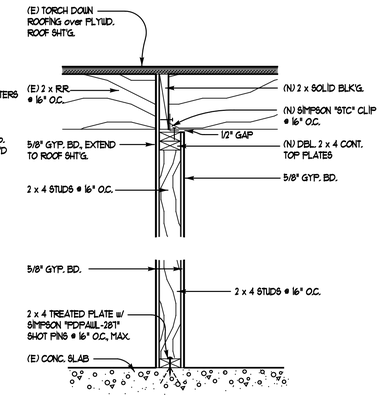

NON-BEARING WALL FRAMING

190005-403 (3) 1"=1'-0"

10/01/2019 11:48 ICC-ES-ESR-2138 SIMPSON SHOT PIN

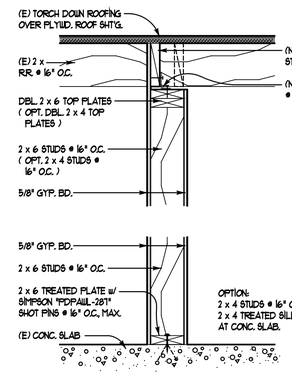

NON-BEARING WALL FRAMING

190005-401 (1) 1"=1'-0"

10/01/2019 12:56 ICC-ES-ESR-2138 SIMPSON SHOT PIN

REFER TO (5 / TI-7) FOR WALL FRAMING CONTINUATION TO FRAMING ABOVE

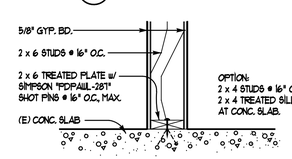

NON-BEARING WALL FRAMING

190005-402 (2) 1"=1'-0"

10/01/2019 12:56 ICC-ES-ESR-2138 SIMPSON SHOT PIN

ROOM FINISH SCHEDULE

ROOM NAME	FLOOR	BASE N	BASE E	BASE S	BASE W	WALLS N	WALLS E	WALLS S	WALLS W	WAINSCOT N	WAINSCOT E	WAINSCOT S	WAINSCOT W	WAINSCOT PAINT	WAINSCOT HEIGHT	CEILING FINISH	CEILING PAINT	CEILING MOULDING	CEILING HEIGHT	REMARKS
LOUNGE	ECS.	C.C.T.	V.T.S.B.	V.T.S.B.	V.T.S.B.	GYP.	GYP.	GYP.	GYP.	COLOR + MANUF. PER OWNER						EXPOSED FRAMING	COLOR + MANUF. PER OWNER		10'-0" ±	.
PRIVATE TASTING	ECS.	C.C.T.	C.C.T.	C.C.T.	C.C.T.		GYP.2	GYP.								EXPOSED FRAMING			10'-0" ±	
CORNHOLE	ECS.															EXPOSED FRAMING			10'-0" ±	
BAR	ECS.	C.C.T.														EXPOSED FRAMING			10'-0" ±	CERAMIC TILE BACK SPLASH .
STORAGE	ECS.	C.C.T.					GYP.	GYP.								EXPOSED FRAMING			10'-0" ±	
COLD STORAGE	.																			MANUFACTURERS FINISHED FLOOR PANELS MANUFACTURERS FINISHED WALL PANELS
HALL	ECS.																		10'-0" ±	
MEN'S	ECS.	C.C.T.	C.C.T.	C.C.T.	C.C.T.	GYP.	GYP.2	GYP.	GYP.							G.B.P.			8'-0" ±	
WOMEN'S	ECS.	C.C.T.	C.C.T.	C.C.T.	C.C.T.	GYP.	GYP.2	GYP.	GYP.							G.B.P.			8'-0" ±	
BREWMASTER OFFICE	ECS.	.														EXPOSED FRAMING			10'-0" ±	
BREWING	ECS.	C.C.T.	C.C.T.	C.C.T.	C.C.T.				GYP.2							EXPOSED FRAMING			10'-0" ±	

INDEX

FLOOR MATERIAL

CPT CARPET
C.T. CERAMIC TILE (NON-SLIP)
E.C.S. EXPOSED CONCRETE SEALED
(E) EXISTING PATCH AS REQUIRED
H.W. HARDWOOD - OAK
Finish: PERGO PROFESSIONAL GRADE ULTRATEC or EQUAL.
L.W.F. LAMINATE WOOD FLOORING
M.P. MEXICAN PAVERS (BY OWNER)
T.C. TROWELED CONCRETE
V.T. VINYL TILE (12" SQ.)
V.S. VINYL (SEAMLESS)
Y.C.W.D. 1 x 4 YELLOW CEDAR T. & G.
D.O.T. DEX-O-TEX - WEATHERWEAR

BASE MATERIAL

B.T. STD. BASE TRIM
(E) EXISTING PATCH AS REQUIRED
V.C.B. VINYL CARPET BASE
V.T.S.B. 4" VINYL TOP SET BASE
C.C.T. COVED CERAMIC TILE
B.W.M. BASE WOOD MOULDING (H.O.M. No. 1175 INVERTED OVER 1 x 6 WHITE OAK)
B.M. H.O.M. No. 5920
M.B.M. MATCH EXISTING BASE MOULDING

WALL MATERIAL

(E) (E) EXISTING PATCH AS REQUIRED
G.B.P. 5/8" GYP. BD., PAINTED
G.B.P.2 TYPE "X" 5/8" GYP. BD., PAINTED
G.B.V. 1/2" GYP. BD. w/ VINYL WALL COVERING
G.B.W.P. 1/2" WATER RESISTANT GYP. BD., PAINTED.
STCO. 7/8" EXT. STUCCO ON MTL. LATH & PAPER

WAINSCOT MATERIAL

C.T. CERAMIC TILE
MT. MARLITE w/ MATCHING TRIM

CEILING MATERIAL

A.C.T. ACOUSTIC CEILING TILE
G.B.P. 5/8" GYP. BD., PAINTED
G.B.W.P. 5/8" WATER RESISTANT GYP. BD., PAINTED
W.D.V.J 1 x 8 V.J. T & G WHITE OAK BLEACHED

PAINT SPECIFATIONS

PAINT COLOR and MANUFACTURER TO BE DETERMINED BY THE OWNER. MINIMUM (3) COATS SHALL BE INSTALLED.

MOULDINGS

ALL MOULDINGS TO BE "HOUSE OF MOULDINGS" NUMBER AS INDICATED.

WINDOW SCHEDULE

MARK NO.	NOM. OPNG. SIZE WIDTH	NOM. OPNG. SIZE HEIGHT	NOM. OPNG. SIZE ROUGH	TYPE	FRAME MAT.	GLASS TYPE	GLASS THICK	REMARKS
1	3'-0" ±	8'-0" ±	.	STORE FRONT	.	MATCH EXISTING	MATCH EXISTING	RETROFIT NEW TEMP. GLASS PANEL VERIFY SIZE IN FIELD
2 (6 / -)	5'-4"	5'-4"	+ 1/4" (H) + 1/4" (V)	FXD.	.	TEMP. GLASS	Ø.375	3/4 HOUR RATED GLASS BLOCK THICKSET 6x6 or EQUAL 8" x 8" x 4" - NOMINAL CLARITY FINISH INSTALL PER MANUF. SPECS. TO MEET RATING REQ'MENTS.

NOTES:

1. SINGLE WINDOWS TO BE INSTALLED SO THAT THE TOP OF THE WINDOW MATCHES TOP OF DOOR HEIGHT
2. ALL WINDOWS SHALL CONFORM TO THE LOCAL BUILDING CODE.
3. CONTRACTOR SHALL SUPPLY SAMPLE OF PRODUCT PRIOR TO ORDERING.

DOOR SCHEDULE

DOOR NO.	DOORS WIDTH	DOORS HEIGHT	DOORS ROUGH	DOORS THK.	FRAME MATERIAL	FRAME MATERIAL	FRAME THRESH HOLD	REMARKS
A	3'-5" ±	6'-8"	. .	MATCH EXISTING STORE FRONT	STORE FRONT	MTL.	YES	RETROFIT NEW TEMP. GLASS GLASS DOOR & ALUM. FRAME INTO EXISTING STOREFRONT WINDOW SYSTEM. DOOR SHALL REMAIN UNLOCKED DURING BUSINESS HOURS
B	3'-0"	6'-8"	. .	MATCH EXISTING STORE FRONT	STORE FRONT	ALUM.	YES	RETROFIT NEW TEMP. GLASS GLASS DOOR & ALUM. FRAME INTO EXISTING INFILLED OPENING. DEMO EXISTING BRICK INFILL PRIOR TO ORDERING STOREFRONT DOOR SYSTEM
C	3'-0"	6'-8"	5'-0" U VERIFY	MATCH EXISTING STORE FRONT	STORE FRONT	ALUM.	N/R	ALUM. STOREFRONT TEMP. GLASS SYSTEM TO MATCH EXISTING INSTALL WITH TEMP. GLASS SIDE LITES AS REQ'D. TO FILL EXISTING WIDTH OF OPENING.
D	3'-0"	6'-8"	1/2" (H) 1/2" (W)	1 3/4	S.C.	WD.	.	4-PANEL DOOR w/ A.D.A. COMPLIANT 18" BOT. RAIL (3) HINGES MIN. A.D.A. COMPLIANT HANDLES LOCKABLE PRE-HANG IF DESIRED
E								NOT USED
F	3'-0"	6'-8"	. .	.	.	.	.	PART OF WALK-IN COOLER SYSTEM. A.D.A. COMPLIANT 18" BOT. RAIL A.D.A. COMPLIANT PULL HANDLE NON-LOCKABLE
G	3'-0"	6'-8"	1/2" (H) 1/2" (W)	1 3/4	S.C.	WD.	.	4-PANEL DOOR w/ A.D.A. COMPLIANT 18" BOT. RAIL (3) HINGES MIN. A.D.A. COMPLIANT HANDLES NON-LOCKABLE INSTALL WOMEN PICTOGRAM w/ "WOMEN" TEXT BELOW ON WALL SIDE OF DOOR.
H	3'-0"	6'-8"	1/2" (H) 1/2" (W)	1 3/4	S.C.	WD.	.	4-PANEL DOOR w/ A.D.A. COMPLIANT 18" BOT. RAIL (3) HINGES MIN. A.D.A. COMPLIANT HANDLES NON-LOCKABLE INSTALL MEN PICTOGRAM w/ "MEN" TEXT BELOW ON WALL SIDE OF DOOR.
J (5 / -)	3'-0"	6'-8"	1/2" (H) 1/2" (W)	1 3/4	MTL.	MTL.	YES	3/4 HOUR RATED DOOR w/ SMOKE SEAL, SELF-CLOSING A.D.A. COMPLIANT 18" BOT. RAIL (3) HINGES MIN. A.D.A. COMPLIANT HANDLES LOCKABLE ADD PLACARD ABOVE DOOR "THIS IS NOT AN EXIT"
K	3'-0"	6'-8"	1/2" (H) 1/2" (W)	1 3/4	SC	WD.	.	4-PANEL DOOR w/ A.D.A. COMPLIANT 18" BOT. RAIL (3) HINGES MIN. A.D.A. COMPLIANT HANDLES LOCKABLE PRE-HANG IF DESIRED
L	3'-0"	-	. .	1"	.	.	.	TOILET COMPARTMENT SYSTEM .
M	2'-4"	-	.	1"	.	.	.	TOILET COMPARTMENT SYSTEM .
N	3'-0"	6'-8"	.	1 3/4"	MTL.	ALM.	YES	EGRESS DOOR "EXIT" ONLY PANIC HARDWARE A.D.A. COMPLIANT 18" BOT. RAIL (3) HINGES MIN. NO OUTSIDE HANDLE NOT LOCKABLE

NOTES:

1. DOORS TO BE PLACED AS INDICATED ON PLAN.
2. CONTRACTOR TO COORDINATE WITH OWNER REGARDING ALL DOOR HARDWARE, HINGES AND LOCKS.
3. CONTRACTOR SHALL SUPPLY SAMPLE OF PRODUCT PRIOR TO ORDERING.
4. REFER TO HANDICAP GENERAL NOTE SHEETS FOR ADDITIONAL A.D.A. INFORMATION.
5. HINGE SIDE OF DOOR SHALL BE PLACED A MIN. OF 4 INCHES OFF ADJACENT WALL, U.N.O.

Plan Check Submit'l. 10-14-19

Abacus design group

Building Design
Additions/Remodels
Tenant Improvements
Swimming Pools
Retaining Walls

AN ASSOCIATE MEMBER TO THE AMERICAN INSTITUTE OF ARCHITECTS

(661) 702-0214

3816 E Fernan Hill Road
Coeur d'Alene, ID 83814

TENANT IMPROVEMENT FOR,
Belleau Wood Brewery Company
6 West Ivy Street
Lillington, NC 27546

DATE: 10-14-19
DESIGNER:
DRAWN/CHECKED: J.C.
JOB NUMBER: 190005

Permit No.

10/09/2019 14:13 190005-03.dwg

WINDOW SCHEDULE
DOOR SCHEDULE
FINISH SCHEDULE
MISC. WALL DETAILS

TI-4.0