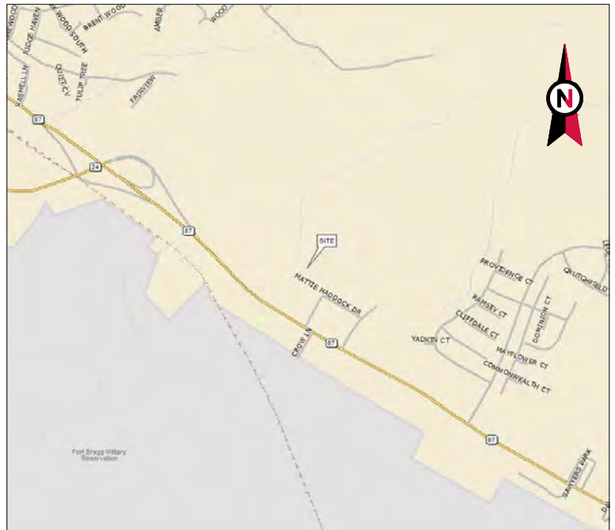

VICINITY MAP

AMERICAN TOWER®

ATC SITE NAME: SPOUT SPRINGS NC
ATC SITE NUMBER: 280251
AT&T MOBILITY SITE ID: SINC001601
AT&T MOBILITY FA LOCATION CODE: 12626511
AT&T MOBILITY SITE NAME: 368-389
AT&T MOBILITY USID: 135237
SITE ADDRESS: 641 NC HWY 24-87
CAMERON, NC 27332-6191

LOCATION MAP

AT&T MOBILITY ANTENNA AMENDMENT PLAN

AT&T MOBILITY IWM JOB NUMBER(S): **WSVWN0054969,** WSVWN0055285, WSVWN0056420, WSVWN0057530, WSVWN0056136, WSVWN0055668.
AT&T MOBILITY PACE JOB NUMBER(S): **MRVWN045043,** MRVWN044637, MRVWN044754, MRVWN044933, MRVWN044420, MRVWN044489.

COMPLIANCE CODE

ALL WORK SHALL BE PERFORMED AND MATERIALS INSTALLED IN ACCORDANCE WITH THE CURRENT EDITIONS OF THE FOLLOWING CODES AS ADOPTED BY THE LOCAL GOVERNMENT AUTHORITIES. NOTHING IN THESE PLANS IS TO BE CONSTRUED TO PERMIT WORK NOT CONFORMING TO THESE CODES.

1. 2018 NORTH CAROLINA BUILDING CODE (NCBC)
2. 2020 NATIONAL ELECTRIC CODE (NEC) WITH NC AMENDMENTS
3. LOCAL BUILDING CODE
4. CITY/COUNTY ORDINANCES

UTILITY COMPANIES

POWER COMPANY: CENTRAL EMC
PHONE: (800) 282-8610

TELEPHONE COMPANY: WINDSTREAM
PHONE: (800) 347-1991

811 Know what's below. Call before you dig.

PROJECT SUMMARY

SITE ADDRESS:

641 NC HWY 24-87

CAMERON, NC 27332-6191

COUNTY: HARNETT

GEOGRAPHIC COORDINATES:

LATITUDE: 35.26477

LONGITUDE: -79.04823

GROUND ELEVATION: 334' AMSL

ZONING INFORMATION:

JURISDICTION: HARNETT COUNTY

PARCEL ID: 9585-62-8794.000

PROJECT TEAM

TOWER OWNER:
AMERICAN TOWER
10 PRESIDENTIAL WAY
WOBURN, MA 01801

APPLICANT:
AT&T MOBILITY

ENGINEER:
TEP ENGINEERING, PLLC
326 TRYON RD
RALEIGH, NC 27603

PROPERTY OWNER:
HMS KIDS INC
3035 NC 87 S
CAMERON, NC 28326-7681

PROJECT LOCATION DIRECTIONS

NC 24/87 N FROM FAYETTEVILLE, NC. ACCESS ROAD RIGHT AFTER SPOUT SPRINGS PLAZA ON RIGHT.

PROJECT DESCRIPTION

THE PROPOSED PROJECT INCLUDES MODIFYING GROUND BASED AND TOWER MOUNTED EQUIPMENT AS INDICATED PER BELOW:

TOWER WORK:
REMOVE (6) ANTENNA(S) AND (12) RRU(s).

INSTALL (15) MOUNT PIPE(S), (18) U-BOLT(S), (6) CROSSOVER PLATE KIT(S), (6) BACK TO BACK RRU BRACKET(S), (9) ANTENNA(S), AND (9) RRU(s).

EXISTING (3) RRU(s), (3) SQUID(S), (2) 0.39" FIBER TRUNK(S), (4) 0.78" 8 AWG 6 DC POWER TRUNK(S), (1) 0.92" 6 AWG 6 DC POWER TRUNK(S), (1) 3/8" RET CONTROL CABLE(S), AND (2) 2" CONDUIT(S) TO REMAIN.

TOWER WORK:
REMOVE (1) ALPHA TE45 INDOOR POWER PLANT(S).

INSTALL (1) VERTIV 7100 POWER PLANT(S), (8) VERTIV -58V CONVERTER(S), (10) VERTIV -48V RECTIFIER(S), (1) 6672 BBU(s) (12) VERTIV 50A DC BREAKER(S), AND (3) VERTIV 30A DC BREAKER(S).

PROJECT NOTES

1. THE FACILITY IS UNMANNED.
2. A TECHNICIAN WILL VISIT THE SITE APPROXIMATELY ONCE A MONTH FOR ROUTINE INSPECTION AND MAINTENANCE.
3. THE PROJECT WILL NOT RESULT IN ANY SIGNIFICANT LAND DISTURBANCE OR EFFECT OF STORM WATER DRAINAGE.
4. NO SANITARY SEWER, POTABLE WATER OR TRASH DISPOSAL IS REQUIRED.
5. HANDICAP ACCESS IS NOT REQUIRED.
6. THE PROJECT DEPICTED IN THESE PLANS QUALIFIES AS AN ELIGIBLE FACILITIES REQUEST ENTITLED TO EXPEDITED REVIEW UNDER 47 U.S.C. § 1455(A) AS A MODIFICATION OF AN EXISTING WIRELESS TOWER THAT INVOLVES THE COLLOCATION, REMOVAL, AND/OR REPLACEMENT OF TRANSMISSION EQUIPMENT THAT IS NOT A SUBSTANTIAL CHANGE UNDER CFR § 1.61000 (B)(7).

SHEET INDEX

SHEET NO:	DESCRIPTION:	REV:	DATE:	BY:
G-001	TITLE SHEET	1	04/22/25	SSP
G-002	GENERAL NOTES	1	04/22/25	SSP
G-003 - G-007	APPENDIX B	1	04/22/25	SSP
C-001	OVERALL SITE PLAN	1	04/22/25	SSP
C-101	DETAILED SITE PLAN	1	04/22/25	SSP
C-102	DETAILED EQUIPMENT LAYOUT	1	04/22/25	SSP
C-201	TOWER ELEVATION	1	04/22/25	SSP
C-401	ANTENNA INSTALLATION	1	04/22/25	SSP
C-402	ANTENNA SCHEDULE	1	04/22/25	SSP
C-501	CONSTRUCTION DETAILS	1	04/22/25	SSP
E-101	ELECTRICAL DETAILS	1	04/22/25	SSP
E-101	ELECTRICAL DETAILS	1	04/22/25	SSP
E-103	GROUNDING PLAN	1	04/22/25	SSP
E-501	GROUNDING DETAILS	1	04/22/25	SSP
R-601 - R-609	SUPPLEMENTAL			

AMERICAN TOWER®

PLANS PREPARED BY:

TEP ENGINEERING, PLLC
326 TRYON ROAD
RALEIGH, NC 27603-3530
OFFICE: (919) 661-6351
www.tepgroup.net
N.C. LICENSE #P-1403

TEP IS A FAMILY OF COMPANIES LICENSED TO PROVIDE DIFFERENT SERVICES IN DIFFERENT JURISDICTIONS. DEPENDING ON THE JURISDICTION, PROFESSIONAL ENGINEERING AND LAND SURVEYING SERVICES ARE PROVIDED BY TEP OPCO LLC, A DELAWARE LIMITED LIABILITY COMPANY, TEP ENGINEERING, LLC, A NORTH CAROLINA PROFESSIONAL LIMITED LIABILITY COMPANY, OR M&H ENGINEERING, LLC, A NEW YORK PROFESSIONAL LIMITED LIABILITY COMPANY. GENERAL CONTRACTOR SERVICES ARE PROVIDED BY TEP OPCO LLC, A DELAWARE LIMITED LIABILITY COMPANY. WE ACQUIRE THE REQUISITE LICENSES IN EACH STATE. ADDITIONAL INFORMATION CAN BE OBTAINED FROM THE COMPANY.

REV.	DESCRIPTION	BY	DATE
A	PRELIMINARY	APM	03/12/25
0	100% CONSTRUCTION	APM	03/20/25
1	100% CONSTRUCTION	SSP	04/22/25

ATC SITE NUMBER: 280251

ATC SITE NAME: SPOUT SPRINGS NC

AT&T MOBILITY SITE NUMBER:

SINC001601

AT&T MOBILITY SITE NAME:

368-389

SITE ADDRESS:
641 NC HWY 24-87
CAMERON, NC 27332-6191

TEP Engineering, PLLC P-1403

NORTH CAROLINA PROFESSIONAL SEAL 048226 ENGINEER SCOTT C. BRAINLEY

SEAL: 04/22/25

AT&T

DATE DRAWN:	04/22/25
ATC JOB NO:	14884017
CUSTOMER NAME:	368-389
CUSTOMER ID:	SINC001601

TITLE SHEET

SHEET NUMBER:	REVISION:
G-001	1

Copyright © 2025 ATC IP LLC, All Rights Reserved.

GENERAL CONSTRUCTION NOTES:

1. OWNER FURNISHED MATERIALS, AT&T MOBILITY "THE COMPANY" WILL PROVIDE AND THE CONTRACTOR WILL INSTALL

   A. BTS EQUIPMENT FRAME (PLATFORM) AND ICEBRIDGE SHELTER (GROUND BUILD/CO-LOCATE ONLY)
   B. AC/TELCO INTERFACE BOX (PPC)
   C. ICE BRIDGE (CABLE TRAY WITH COVER) (GROUND BUILD/CO-LOCATE ONLY, GC TO FURNISH AND INSTALL FOR ROOFTOP INSTALLATION)
   D. TOWERS, MONOPOLES
   E. TOWER LIGHTING
   F. GENERATORS & LIQUID PROPANE TANK
   G. ANTENNA STANDARD BRACKETS, FRAMES AND PIPES FOR MOUNTING
   H. ANTENNAS (INSTALLED BY OTHERS)
   I. TRANSMISSION LINE
   J. TRANSMISSION LINE JUMPERS
   K. TRANSMISSION LINE CONNECTORS WITH WEATHERPROOFING KITS
   L. TRANSMISSION LINE GROUND KITS
   M. HANGERS
   N. HOISTING GRIPS
   O. BTS EQUIPMENT

2. THE CONTRACTOR IS RESPONSIBLE TO PROVIDE ALL OTHER MATERIALS FOR THE COMPLETE INSTALLATION OF THE SITE INCLUDING, BUT NOT LIMITED TO, SUCH MATERIALS AS FENCING, STRUCTURAL STEEL SUPPORTING SUB-FRAME FOR PLATFORM, ROOFING LABOR AND MATERIALS, GROUNDING RINGS, GROUNDING WIRES, COPPER-CLAD OR XIT CHEMICAL GROUND ROD(S), BUSS BARS, TRANSFORMERS AND DISCONNECT SWITCHES WHERE APPLICABLE, TEMPORARY ELECTRICAL POWER, CONDUIT, LANDSCAPING COMPOUND STONE, CRANES, CORE DRILLING, SLEEPERS AND RUBBER MATTING, REBAR, CONCRETE CAISSONS, PADS AND/OR AUGER MOUNTS, MISCELLANEOUS FASTENERS, CABLE TRAYS, NON-STANDARD ANTENNA FRAMES AND ALL OTHER MATERIAL AND LABOR REQUIRED TO COMPLETE THE JOB ACCORDING TO THE DRAWINGS AND SPECIFICATIONS. IT IS THE POSITION OF AT&T MOBILITY TO APPLY FOR PERMITTING AND CONTRACTOR RESPONSIBLE FOR PICKUP AND PAYMENT OF REQUIRED PERMITS.

3. ALL WORK SHALL CONFORM TO ALL CURRENT APPLICABLE FEDERAL, STATE, AND LOCAL CODES, INCLUDING ANSI/EIA/TIA-222, AND COMPLY WITH ATC CONSTRUCTION SPECIFICATIONS.

4. CONTRACTOR SHALL CONTACT LOCAL 811 FOR IDENTIFICATION OF UNDERGROUND UTILITIES PRIOR TO START OF CONSTRUCTION.

5. CONTRACTOR SHALL BE RESPONSIBLE FOR COORDINATING ALL REQUIRED INSPECTIONS.

6. ALL DIMENSIONS TO, OF, AND ON EXISTING BUILDINGS, DRAINAGE STRUCTURES, AND SITE IMPROVEMENTS SHALL BE VERIFIED IN FIELD BY CONTRACTOR WITH ALL DISCREPANCIES REPORTED TO THE ENGINEER.

7. DO NOT CHANGE SIZE OR SPACING OF STRUCTURAL ELEMENTS.

8. DETAILS SHOWN ARE TYPICAL; SIMILAR DETAILS APPLY TO SIMILAR CONDITIONS UNLESS OTHERWISE NOTED.

9. THESE DRAWINGS DO NOT INCLUDE NECESSARY COMPONENTS FOR CONSTRUCTION SAFETY WHICH SHALL BE THE SOLE RESPONSIBILITY OF THE CONTRACTOR.

10. CONTRACTOR SHALL BRACE STRUCTURES UNTIL ALL STRUCTURAL ELEMENTS NEEDED FOR STABILITY ARE INSTALLED. THESE ELEMENTS ARE AS FOLLOWS: LATERAL BRACING, ANCHOR BOLTS, ETC.

11. CONTRACTOR SHALL DETERMINE EXACT LOCATION OF EXISTING UTILITIES, GROUNDS DRAINS, DRAIN PIPES, VENTS, ETC. BEFORE COMMENCING WORK.

12. INCORRECTLY FABRICATED, DAMAGED, OR OTHERWISE MISFITTING OR NONCONFORMING MATERIALS OR CONDITIONS SHALL BE REPORTED TO THE AT&T MOBILITY REP PRIOR TO REMEDIAL OR CORRECTIVE ACTION. ANY SUCH REMEDIAL ACTION SHALL REQUIRE WRITTEN APPROVAL BY THE AT&T MOBILITY REP PRIOR TO PROCEEDING.

13. EACH CONTRACTOR SHALL COOPERATE WITH THE AT&T MOBILITY REP, AND COORDINATE HIS WORK WITH THE WORK OF OTHERS.

14. CONTRACTOR SHALL REPAIR ANY DAMAGE CAUSED BY CONSTRUCTION OF THIS PROJECT TO MATCH EXISTING PRE-CONSTRUCTION CONDITIONS TO THE SATISFACTION OF THE AT&T MOBILITY CONSTRUCTION MANAGER.

15. ALL CABLE/CONDUIT ENTRY/EXIT PORTS SHALL BE WEATHERPROOFED DURING INSTALLATION USING A SILICONE SEALANT.

16. WHERE EXISTING CONDITIONS DO NOT MATCH THOSE SHOWN IN THIS PLAN SET, CONTRACTOR SHALL NOTIFY THE AT&T MOBILITY REP AND ENGINEER OF RECORD IMMEDIATELY.

17. CONTRACTOR SHALL ENSURE ALL SUBCONTRACTORS ARE PROVIDED WITH A COMPLETE AND CURRENT SET OF DRAWINGS AND SPECIFICATIONS FOR THIS PROJECT.

18. CONTRACTOR SHALL REMOVE ALL RUBBISH AND DEBRIS FROM THE SITE AT THE END OF EACH DAY.

19. CONTRACTOR SHALL COORDINATE WORK SCHEDULE WITH AMERICAN TOWER CORPORATION (ATC) AND TAKE PRECAUTIONS TO MINIMIZE IMPACT AND DISRUPTION OF OTHER OCCUPANTS OF THE FACILITY.

20. CONTRACTOR SHALL FURNISH AT&T MOBILITY AND AMERICAN TOWER CORPORATION (ATC) WITH A PDF MARKED UP AS-BUILT SET OF DRAWINGS UPON COMPLETION OF WORK.

21. PRIOR TO SUBMISSION OF BID, CONTRACTOR SHALL COORDINATE WITH AT&T MOBILITY REP TO DETERMINE WHAT, IF ANY, ITEMS WILL BE PROVIDED. ALL ITEMS NOT PROVIDED SHALL BE PROVIDED AND INSTALLED BY THE CONTRACTOR. CONTRACTOR WILL INSTALL ALL ITEMS PROVIDED.

22. PRIOR TO SUBMISSION OF BID, CONTRACTOR SHALL COORDINATE WITH AT&T MOBILITY REP TO DETERMINE IF ANY PERMITS WILL BE OBTAINED BY CONTRACTOR. ALL REQUIRED PERMITS NOT OBTAINED BY AT&T MOBILITY MUST BE OBTAINED, AND PAID FOR, BY THE CONTRACTOR.

23. CONTRACTOR SHALL INSTALL ALL SITE SIGNAGE IN ACCORDANCE WITH AT&T MOBILITY SPECIFICATIONS AND REQUIREMENTS.

24. CONTRACTOR SHALL SUBMIT ALL SHOP DRAWINGS TO AT&T MOBILITY FOR REVIEW AND APPROVAL PRIOR TO FABRICATION.

25. ALL EQUIPMENT SHALL BE INSTALLED ACCORDING TO MANUFACTURER'S SPECIFICATIONS AND LOCATED ACCORDING TO AT&T MOBILITY SPECIFICATIONS, AND AS SHOWN IN THESE PLANS.

26. THE CONTRACTOR SHALL SUPERVISE AND DIRECT THE PROJECT DESCRIBED HEREIN. THE CONTRACTOR SHALL BE SOLELY RESPONSIBLE FOR ALL THE CONSTRUCTION MEANS, METHODS, TECHNIQUES, SEQUENCES AND PROCEDURES AND FOR COORDINATING ALL PORTIONS OF THE WORK UNDER THE CONTRACT.

27. CONTRACTOR SHALL NOTIFY AT&T MOBILITY REP A MINIMUM OF 48 HOURS IN ADVANCE OF POURING CONCRETE OR BACKFILLING ANY UNDERGROUND UTILITIES, FOUNDATIONS OR SEALING ANY WALL, FLOOR OR ROOF PENETRATIONS FOR ENGINEERING REVIEW AND APPROVAL.

28. WHEN THE PROJECT SCOPE REQUIRES THE USE OF THE SAFETY CLIMB, THE GENERAL CONTRACTOR SHALL ENSURE THE SAFETY CLIMB IS FREE OF OBSTRUCTIONS, NOT RUBBING ON OR TRAPPED BY ANY INSTALLED CUSTOMER EQUIPMENT, IS VISUALLY TAUT, MEETS MANUFACTURER INSTALLATION SPECIFICATIONS, AND IS FIRMLY SECURED AT ALL CABLE GUIDE LOCATIONS UPON PROJECT COMPLETION.

29. COMPLETION OF PROJECT SHALL NOT OBSTRUCT, TRAP, LOOSEN, OR OTHERWISE CAUSE FAILURE TO MEET MANUFACTURER INSTALLATION REQUIREMENTS FOR THE SAFETY CLIMB.

30. CONTRACTOR SHALL BE RESPONSIBLE FOR SITE SAFETY INCLUDING COMPLIANCE WITH ALL APPLICABLE OSHA STANDARDS AND RECOMMENDATIONS AND SHALL PROVIDE ALL NECESSARY SAFETY DEVICES INCLUDING PPE AND PPM AND CONSTRUCTION DEVICES SUCH AS WELDING AND FIRE PREVENTION, TEMPORARY SHORING, SCAFFOLDING, TRENCH BOXES/SLOPING, BARRIERS, ETC.

31. THE CONTRACTOR SHALL PROTECT AT HIS OWN EXPENSE, ALL EXISTING FACILITIES AND SUCH OF HIS NEW WORK LIABLE TO INJURY DURING THE CONSTRUCTION PERIOD. ANY DAMAGE CAUSED BY NEGLECT ON THE PART OF THIS CONTRACTOR OR HIS REPRESENTATIVES, OR BY THE ELEMENTS DUE TO NEGLECT ON THE PART OF THIS CONTRACTOR OR HIS REPRESENTATIVES, EITHER TO THE EXISTING WORK, OR TO HIS WORK OR THE WORK OF ANY OTHER CONTRACTOR, SHALL BE REPAIRED AT HIS EXPENSE TO THE OWNER'S SATISFACTION.

32. ALL WORK SHALL BE INSTALLED IN A FIRST CLASS, NEAT AND WORKMANLIKE MANNER BY MECHANICS SKILLED IN THE TRADE INVOLVED. THE QUALITY OF WORKMANSHIP SHALL BE SUBJECT TO THE APPROVAL OF THE AT&T MOBILITY REP. ANY WORK FOUND BY THE AT&T MOBILITY REP TO BE OF INFERIOR QUALITY AND/OR WORKMANSHIP SHALL BE REPLACED AND/OR REWORKED AT CONTRACTOR EXPENSE UNTIL APPROVAL IS OBTAINED.

33. IN ORDER TO ESTABLISH STANDARDS OF QUALITY AND PERFORMANCE, ALL TYPES OF MATERIALS LISTED HEREINAFTER BY MANUFACTURER'S NAMES AND/OR MANUFACTURER'S CATALOG NUMBER SHALL BE PROVIDED BY THESE MANUFACTURERS AS SPECIFIED.

34. AT&T MOBILITY FURNISHED EQUIPMENT SHALL BE PICKED-UP AT THE AT&T MOBILITY WAREHOUSE, NO LATER THAN 48HR AFTER BEING NOTIFIED INSURED, STORED, UNCRATE, PROTECTED AND INSTALLED BY THE CONTRACTOR WITH ALL APPURTENANCES REQUIRED TO PLACE THE EQUIPMENT IN OPERATION, READY FOR USE. THE CONTRACTOR SHALL BE RESPONSIBLE FOR THE EQUIPMENT AFTER PICKING IT UP.

35. AT&T MOBILITY OR HIS ARCHITECT/ENGINEER RESERVES THE RIGHT TO REJECT ANY EQUIPMENT OR MATERIALS WHICH, IN HIS OWN OPINION ARE NOT IN COMPLIANCE WITH THE CONTRACT DOCUMENTS, EITHER BEFORE OR AFTER INSTALLATION AND THE EQUIPMENT SHALL BE REPLACED WITH EQUIPMENT CONFORMING TO THE REQUIREMENTS OF THE CONTRACT DOCUMENTS BY THE CONTRACTOR AT NO COST TO AT&T MOBILITY OR THEIR ARCHITECT/ENGINEER.

SPECIAL CONSTRUCTION
ANTENNA INSTALLATION NOTES:

1. WORK INCLUDED:

A. ANTENNA AND COAXIAL CABLES ARE FURNISHED BY AT&T MOBILITY UNDER A SEPARATE CONTRACT. THE CONTRACTOR SHALL ASSIST ANTENNA INSTALLATION CONTRACTOR IN TERMS OF COORDINATION AND SITE ACCESS. ERECTION SUBCONTRACTOR SHALL BE RESPONSIBLE FOR THE PROTECTION OF PERSONNEL.

B. INSTALL ANTENNAS AS INDICATED ON DRAWINGS AND AT&T MOBILITY SPECIFICATIONS.

C. INSTALL GALVANIZED STEEL ANTENNA MOUNTS AS INDICATED ON DRAWINGS.

D. INSTALL FURNISHED GALVANIZED STEEL OR ALUMINUM WAVEGUIDE.

E. CONTRACTOR SHALL PROVIDE FOUR (4) SETS OF SWEEP TESTS USING ANRITZU-PACKARD 8713B RF SCALAR NETWORK ANALYZER. SUBMIT FREQUENCY DOMAIN REFLECTOMETER(FDR) TESTS RESULTS TO THE PROJECT MANAGER. SWEEP TESTS SHALL BE AS PER ATTACHED RFS "MINIMUM FIELD TESTING RECOMMENDED FOR ANTENNA AND HELIAX COAXIAL CABLE SYSTEMS" DATED 10/5/93. TESTING SHALL BE PERFORMED BY AN INDEPENDENT TESTING SERVICE AND BE BOUND AND SUBMITTED WITHIN ONE WEEK OF WORK COMPLETION.

F. INSTALL COAXIAL CABLES AND TERMINATING BETWEEN ANTENNAS AND EQUIPMENT PER MANUFACTURER'S RECOMMENDATIONS. WEATHERPROOF ALL CONNECTIONS BETWEEN THE ANTENNA AND EQUIPMENT PER MANUFACTURER'S REQUIREMENTS. TERMINATE ALL COAXIAL CABLE THREE (3) FEET IN EXCESS OF ENTRY PORT LOCATION UNLESS OTHERWISE STATED.

G. ANTENNA AND COAXIAL CABLE GROUNDING:

2. ALL EXTERIOR #6 GREEN GROUND WIRE "DAISY CHAIN" CONNECTIONS ARE TO BE WEATHER SEALED WITH RFS CONNECTORS/SPLICE WEATHERPROOFING KIT #221213 OR EQUAL.

3. ALL COAXIAL CABLE GROUNDING KITS ARE TO BE INSTALLED ON STRAIGHT RUNS OF COAXIAL CABLE (NOT WITHIN BENDS)

ALL DISCREPANCIES FROM WHAT IS SHOWN ON THESE CONSTRUCTION DRAWINGS SHALL BE COMMUNICATED TO ATC ENGINEERING IMMEDIATELY FOR CORRECTION OR RE-DESIGN. FAILURE TO COMMUNICATE DIRECTLY WITH ATC ENGINEERING OR ANY CHANGES FROM THE DESIGN CONDUCTED WITHOUT PRIOR APPROVAL FROM ATC ENGINEERING SHALL BE THE SOLE RESPONSIBILITY OF THE GENERAL CONTRACTOR.

AMERICAN TOWER®

PLANS PREPARED BY:

TEP

TEP ENGINEERING, PLLC
326 TRYON ROAD
RALEIGH, NC 27603-3530
OFFICE: (919) 661-6351
www.tepgroup.net
N.C. LICENSE #P-1403

TEP IS A FAMILY OF COMPANIES LICENSED TO PROVIDE DIFFERENT SERVICES IN DIFFERENT JURISDICTIONS. DEPENDING ON THE JURISDICTION, PROFESSIONAL ENGINEERING AND LAND SURVEYING SERVICES ARE PROVIDED BY TEP OPCO LLC, A DELAWARE LIMITED LIABILITY COMPANY, TEP ENGINEERING, LLC, A NORTH CAROLINA PROFESSIONAL LIMITED LIABILITY COMPANY, OR M&H ENGINEERING, LLC, A NEW YORK PROFESSIONAL LIMITED LIABILITY COMPANY. GENERAL CONTRACTOR SERVICES ARE PROVIDED BY TEP OPCO LLC, A DELAWARE LIMITED LIABILITY COMPANY. WE ACQUIRE THE REQUISITE LICENSES IN EACH STATE. ADDITIONAL INFORMATION CAN BE OBTAINED FROM THE COMPANY.

REV.	DESCRIPTION	BY	DATE
A	PRELIMINARY	APM	03/12/25
0	100% CONSTRUCTION	APM	03/20/25
1	100% CONSTRUCTION	SSP	04/22/25

ATC SITE NUMBER: 280251

ATC SITE NAME: SPOUT SPRINGS NC

AT&T MOBILITY SITE NUMBER:

SINC001601

AT&T MOBILITY SITE NAME:

368-389

SITE ADDRESS:
641 NC HWY 24-87
CAMERON, NC 27332-6191

TEP Engineering, PLLC P-1403

NORTH CAROLINA PROFESSIONAL SEAL 048226 ENGINEER SCOTT C. BRANTLEY

SEAL: 04/22/25

AT&T

DATE DRAWN:	04/22/25
ATC JOB NO:	14884017
CUSTOMER NAME:	368-389
CUSTOMER ID:	SINC001601

GENERAL NOTES

SHEET NUMBER:	REVISION:
G-002	1

Copyright © 2025 ATC IP LLC, All Rights Reserved

2018 APPENDIX B
BUILDING CODE SUMMARY FOR ALL COMMERCIAL PROJECTS
(EXCEPT 1 AND 2-FAMILY DWELLINGS AND TOWNHOUSES)

(Reproduce the following data on the building plans sheet 1 or 2)

Name of Project: SPOUT SPRINGS NC

Address: 641 NC HWY 24-87, CAMERON, NC Zip Code 27332-6191

Owner/Authorized Agent: AARON DIAL Phone # (919) 466 - 5383 E-Mail AaronDial@AmericanTower.com

Owned By: ☐ City/County ☒ Private ☐ State

Code Enforcement Jurisdiction: ☐ City ☒ County HARNETT ☐ State

CONTACT:

DESIGNER	FIRM	NAME	LICENSE #	TELEPHONE #	E-MAIL
Architectural				( )	
Civil	TEP ENGINEERING, PLLC	Scott C. Brantley	048226	(919) 661-6351	sbrantley@tepgroup.net
Electrical				( )	
Fire Alarm				( )	
Plumbing				( )	
Mechanical				( )	
Sprinkler-Standpipe				( )	
Structural				( )	
Retaining Walls >5' High				( )	
Other				( )	

("Other" should include firms and individuals such as truss, precast, pre-engineered, interior designers, etc.)

2018 NC BUILDING CODE: ☐ New Building ☐ Addition ☒ Renovation
☐ 1st Time Interior Completion
☐ Shell/Core - Contact the local inspection jurisdiction for possible additional procedures and requirements
☐ Phased Construction - Shell/Core- Contact the local inspection jurisdiction for possible additional procedures and requirements

2018 NC EXISTING BUILDING CODE: EXISTING: ☐ Prescriptive ☐ Repair ☐ Chapter 14
Alteration: ☐ Level I ☐ Level II ☐ Level III
☐ Historic Property ☐ Change of Use

CONSTRUCTED: (date) _____ **CURRENT OCCUPANCY(S)** (Ch. 3): _____

RENOVATED: (date) _____ **PROPOSED OCCUPANCY(S)** (Ch. 3): _____

OCCUPANCY CATEGORY (Table 1604.5): **Current:** ☐ I ☐ II ☐ III ☐ IV
Proposed: ☐ I ☐ II ☐ III ☐ IV

BASIC BUILDING DATA

Construction Type: ☒ I-A ☐ II-A ☐ III-A ☐ IV ☐ V-A
(check all that apply) ☐ I-B ☐ II-B ☐ III-B ☐ V-B

Sprinklers: ☒ No ☐ Partial ☐ Yes ☐ NFPA 13 ☐ NFPA 13R ☐ NFPA 13D

Standpipes: ☒ No ☐ Yes Class ☐ I ☐ II ☐ III ☐ Wet ☐ Dry

Fire District: ☒ No ☐ Yes **Flood Hazard Area:** ☒ No ☐ Yes

Special Inspections Required: ☒ No ☐ Yes (Contact the local inspection jurisdiction for additional procedures and requirements.)

Gross Building Area Table

FLOOR	EXISTING (SQ FT)	NEW (SQ FT)	SUB-TOTAL
3rd Floor	N/A		
2nd Floor	N/A		
Mezzanine	N/A		
1st Floor	230 SQ FT EQUIPMENT SHELTER		
Basement	N/A		
TOTAL	230 SQ FT EQUIPMENT SHELTER		

ALLOWABLE AREA

Primary Occupancy Classification(s): Select one Select one Select one Select one Select one Select one

Assembly ☐ A-1 ☐ A-2 ☐ A-3 ☐ A-4 ☐ A-5
Business ☐
Educational ☐
Factory ☐ F-1 Moderate ☐ F-2 Low
Hazardous ☐ H-1 Detonate ☐ H-2 Deflagrate ☐ H-3 Combust ☐ H-4 Health ☐ H-5 HPM
Institutional ☐ I-1 Condition ☐ 1 ☐ 2
☐ I-2 Condition ☐ 1 ☐ 2
☐ I-3 Condition ☐ 1 ☐ 2 ☐ 3 ☐ 4 ☐ 5
☐ I-4
Mercantile ☐
Residential ☐ R-1 ☐ R-2 ☐ R-3 ☐ R-4
Storage ☐ S-1 Moderate ☐ S-2 Low ☐ High-piled
☐ Parking Garage ☐ Open ☐ Enclosed ☐ Repair Garage
Utility and Miscellaneous ☒

Accessory Occupancy Classification(s): N/A

Incidental Uses (Table 509): N/A

Special Uses (Chapter 4 – List Code Sections): N/A

Special Provisions: (Chapter 5 – List Code Sections): N/A

Mixed Occupancy: ☐ No ☐ Yes Separation: _____ Hr. Exception: _____

☐ Non-Separated Use (508.3) - The required type of construction for the building shall be determined by applying the height and area limitations for each of the applicable occupancies to the entire building. The most restrictive type of construction, so determined, applies to the entire building.

☐ Separated Use (508.4) - See below for area calculations. Separation, the area of the occupancy shall be such that the sum of the actual floor area of each use divided by the allowable floor area shall not exceed 1.

Actual Area of Occupancy A / *Allowable Area of Occupancy A* + *Actual Area of Occupancy B* / *Allowable Area of Occupancy B* ≤ 1

_____ + _____ + …… = _____ ≤ 1.00

N/A
NOT A BUILDING

AMERICAN TOWER®

PLANS PREPARED BY:

TEP

TEP ENGINEERING, PLLC
326 TRYON ROAD
RALEIGH, NC 27603-3530
OFFICE: (919) 661-6351
www.tepgroup.net
N.C. LICENSE #P-1403

TEP IS A FAMILY OF COMPANIES LICENSED TO PROVIDE DIFFERENT SERVICES IN DIFFERENT JURISDICTIONS. DEPENDING ON THE JURISDICTION, PROFESSIONAL ENGINEERING AND LAND SURVEYING SERVICES ARE PROVIDED BY TEP OPCO LLC, A DELAWARE LIMITED LIABILITY COMPANY, TEP ENGINEERING, LLC, A NORTH CAROLINA PROFESSIONAL LIMITED LIABILITY COMPANY, OR M&H ENGINEERING, LLC, A NEW YORK PROFESSIONAL LIMITED LIABILITY COMPANY. GENERAL CONTRACTOR SERVICES ARE PROVIDED BY TEP OPCO LLC, A DELAWARE LIMITED LIABILITY COMPANY. WE ACQUIRE THE REQUISITE LICENSES IN EACH STATE. ADDITIONAL INFORMATION CAN BE OBTAINED FROM THE COMPANY.

REV.	DESCRIPTION	BY	DATE
A	PRELIMINARY	APM	03/12/25
0	100% CONSTRUCTION	APM	03/20/25
1	100% CONSTRUCTION	SSP	04/22/25

ATC SITE NUMBER: 280251

ATC SITE NAME: SPOUT SPRINGS NC

AT&T MOBILITY SITE NUMBER:

SINC001601

AT&T MOBILITY SITE NAME:

368-389

SITE ADDRESS:
641 NC HWY 24-87
CAMERON, NC 27332-6191

TEP Engineering, PLLC P-1403

NORTH CAROLINA PROFESSIONAL SEAL 048226 ENGINEER SCOTT C. BRANTLEY

SEAL: 04/22/25

AT&T

DATE DRAWN:	04/22/25
ATC JOB NO:	14884017
CUSTOMER NAME:	368-389
CUSTOMER ID:	SINC001601

APPENDIX B

SHEET NUMBER: G-003

REVISION: 1

Copyright © 2025 ATC IP LLC, All Rights Reserved

STORY NO.	DESCRIPTION AND USE	(A) BLDG AREA PER STORY (ACTUAL)	(B) TABLE 5	(C) AREA FOR FRONTAGE INCREASE[1,5]	(D) ALLOWABLE AREA PER STORY OR UNLIMITED[2,3]

N/A
NOT A BUILDING

[1] Frontage area increases from Section 50 ... us:

a. Perimeter which fronts a publ... e having 20 feet minimum width = _____ (F)

b. Total Building Perimeter _____ (P)

c. Ratio (F/P) = _____ (F/

d. W = Minimum width of public wa... _____ (W)

e. Percent of frontage increase $I_f = 100[F/P - 0.25] \times W/30$ = _____ (%)

[2] Unlimited area applicable under conditions of Section 507.

[3] Maximum Building Area = total number of stories in the building x D (maximum3 stories) (506.2).

[4] The maximum area of open parking garages must comply with Tab... 406.5.4. The maximum area of air traffic control towers must comply with Table 412.3.1.

[5] Frontage increase is based on the unsprinklered area value in ...

N/A
NOT A BUILDING

ALLOW...

		SHOWN ON PLANS	CODE REFERENCE
Building Height in Feet (Table 504.3)			
Building Height in Stories (Table 504.4)			

[1] Provide code reference if the "Shown on Plans" qu... on Table 504.3 or 504.4.

FIRE PROTECTION REQUIREMENTS

BUILDING ELEMENT	FIRE SEPARATION DISTANCE (FEET)	RATING REQ'D	RATING PROVID... (W/... REF...	DETAIL # AND ...T #	DESIGN # FOR RATED ASSEMBLY	SHEET # FOR RATED PENETRATION	SHEET # FOR RATED JOINTS
Structural Frame, including columns, girders, trusses							
Bearing Walls							
Exterior							
North							
East							
West							
South							
Interior							
Nonbearing Walls and Partitions							
Exterior walls							
North							
East							
West							
South							
Interior walls and partitions							
Floor Construction Including supporting beams and joists							
Floor Ceiling Assembly							
Columns Supporting Floors							
Roof Construction, including supporting beams and joists							
Roof Ceiling Assembly							
Columns Supporting Roof							
Shaft Enclosures - Exit							
Shaft Enclosures - Other							
Corridor Separation							
Occupancy/Fire Barrier Separation							
Party/Fire Wall Separation							
Smoke Barrier Separation							
Smoke Partition							
Tenant/Dwelling Unit/ Sleeping Unit Separation							
Incidental Use Separation							

N/A
NOT A BUILDING

N/A
NOT A BUILDING

* Indicate section number permitting reduction

AMERICAN TOWER®

PLANS PREPARED BY:

TEP

TEP ENGINEERING, PLLC
326 TRYON ROAD
RALEIGH, NC 27603-3530
OFFICE: (919) 661-6351
www.tepgroup.net
N.C. LICENSE #P-1403

TEP IS A FAMILY OF COMPANIES LICENSED TO PROVIDE DIFFERENT SERVICES IN DIFFERENT JURISDICTIONS. DEPENDING ON THE JURISDICTION, PROFESSIONAL ENGINEERING AND LAND SURVEYING SERVICES ARE PROVIDED BY TEP OPCO LLC, A DELAWARE LIMITED LIABILITY COMPANY, TEP ENGINEERING, LLC, A NORTH CAROLINA PROFESSIONAL LIMITED LIABILITY COMPANY, OR M&H ENGINEERING, LLC, A NEW YORK PROFESSIONAL LIMITED LIABILITY COMPANY. GENERAL CONTRACTOR SERVICES ARE PROVIDED BY TEP OPCO LLC, A DELAWARE LIMITED LIABILITY COMPANY. WE ACQUIRE THE REQUISITE LICENSES IN EACH STATE. ADDITIONAL INFORMATION CAN BE OBTAINED FROM THE COMPANY.

REV.	DESCRIPTION	BY	DATE
A	PRELIMINARY	APM	03/12/25
0	100% CONSTRUCTION	APM	03/20/25
1	100% CONSTRUCTION	SSP	04/22/25

ATC SITE NUMBER: 280251

ATC SITE NAME: SPOUT SPRINGS NC

AT&T MOBILITY SITE NUMBER:

SINC001601

AT&T MOBILITY SITE NAME:

368-389

SITE ADDRESS:
641 NC HWY 24-87
CAMERON, NC 27332-6191

TEP Engineering, PLLC P-1403

NORTH CAROLINA PROFESSIONAL SEAL 048226 ENGINEER SCOTT C. BRANNEN

SEAL: 04/22/25

AT&T

DATE DRAWN:	04/22/25
ATC JOB NO:	14884017
CUSTOMER NAME:	368-389
CUSTOMER ID:	SINC001601

APPENDIX B

SHEET NUMBER: G-004

REVISION: 1

Copyright © 2025 ATC IP LLC, All Rights Reserved

PERCENTAGE OF WALL O[illegible]NG CALCULATIONS

Fire Separation Distance (Feet) from Property lines	Degree of openings Protection (Table 705.8)	[illegible]E AREA	Actual shown on plans (%)

N/A
NOT A BUILDING

LIFE SA[illegible]STEM REQUIREMENTS

Emergency Lighting: ☐ No ☐ [illegible]
Exit Signs: ☐ No ☐ Yes
Fire Alarm: ☐ No ☐ Yes
Smoke Detection Systems: ☐ No ☐ Yes ☐ Partial _____
Panic Hardware: ☐ No ☐ Yes

LIFE SAFETY PLAN REQUIREMENTS

Life Safety Plan Sheet #: _____

- ☐ Fire and/or smoke rated wall locations (Chapter 7)
- ☐ Assumed and real property line locations (if not on the site plan)
- ☐ Exterior wall opening area with respect to distance to assumed p[illegible]rty lines (705.8)
- ☐ Occupancy Use for each area as it relates to occupant load ca[illegible] Table 1004.1.2)
- ☐ Occupant loads for each area
- ☐ Exit access travel distances (1017)
- ☐ Common path of travel distances (Tables 1006.2.1[illegible]
- ☐ Dead end lengths (1020.4)
- ☐ Clear exit widths for each exit door
- ☐ Maximum calculated occupant load cap[illegible]an accommodate based on egress width (1005.3)
- ☐ Actual occupant load for each exit do[illegible]
- ☐ A separate schematic plan indicating [illegible] floor/ceiling and/or roof structure is provided for purposes of occupancy separation
- ☐ Location of doors with panic hardware (101[illegible]10)
- ☐ Location of doors with delayed egress locks and the amount of delay (1010.1.9.7)
- ☐ Location of doors with electromagnetic egress locks (1010.1.9.9)
- ☐ Location of doors equipped with hold-open devices
- ☐ Location of emergency escape windows (1030)
- ☐ The square footage of each fire area (202)
- ☐ The square footage of each smoke compartment for Occupancy Classification I-2 (407.5)
- ☐ Note any code exceptions or table notes that may have been utilized regarding the items above

N/A
NOT A BUILDING

ACCESSIBLE DWELL[illegible]G UNITS
(SECTION 1[illegible]

Total Units	Accessible Units Required	Accessible Units Provided	Type A Units Required	[illegible]	[illegible]B [illegible]S [illegible]QUIRED	Type B Units Provided	total accessible Units provided

N/A
NOT A BUILDING

[illegible]E PARKING
[illegible]ION 1106)

LOT OR PARKING AREA	TOTAL # OF PARKING S[illegible]		# OF ACCESSIBLE SPACES PROVIDED			TOTAL # ACCESSIBLE PROVIDED
	REQUIRED	PROVIDE[illegible]	REGULAR WITH 5' ACCESS AISLE	VAN SPACES WITH 132" ACCESS AISLE	VAN SPACES WITH 8' ACCESS AISLE	
TOTAL						

PLUMBING FIXTURE R[illegible]IREMENTS
(TABLE [illegible]

USE		WATERCLOSETS			URINA[illegible]	[illegible]S		SHOWERS /TUBS	DRINKING FOUNTAINS	
		MALE	FEMALE	UNISEX		[illegible]LE	UNISEX		REGULAR	ACCESSIBLE
SPACE	EXIST'G									
	NEW									
	REQ'D									

N/A
NOT A BUILDING

[illegible]IAL APPROVALS

Special approval: (Local Jurisdiction, Department of Insurance, OSC, DPI, DHHS, etc., describe below)

_____

_____

AMERICAN TOWER®

PLANS PREPARED BY:

TEP

TEP ENGINEERING, PLLC
326 TRYON ROAD
RALEIGH, NC 27603-3530
OFFICE: (919) 661-6351
www.tepgroup.net
N.C. LICENSE #P-1403

TEP IS A FAMILY OF COMPANIES LICENSED TO PROVIDE DIFFERENT SERVICES IN DIFFERENT JURISDICTIONS. DEPENDING ON THE JURISDICTION, PROFESSIONAL ENGINEERING AND LAND SURVEYING SERVICES ARE PROVIDED BY TEP OPCO LLC, A DELAWARE LIMITED LIABILITY COMPANY, TEP ENGINEERING, LLC, A NORTH CAROLINA PROFESSIONAL LIMITED LIABILITY COMPANY, OR M&H ENGINEERING, LLC, A NEW YORK PROFESSIONAL LIMITED LIABILITY COMPANY. GENERAL CONTRACTOR SERVICES ARE PROVIDED BY TEP OPCO LLC, A DELAWARE LIMITED LIABILITY COMPANY. WE ACQUIRE THE REQUISITE LICENSES IN EACH STATE. ADDITIONAL INFORMATION CAN BE OBTAINED FROM THE COMPANY.

REV.	DESCRIPTION	BY	DATE
A	PRELIMINARY	APM	03/12/25
0	100% CONSTRUCTION	APM	03/20/25
1	100% CONSTRUCTION	SSP	04/22/25

ATC SITE NUMBER: 280251

ATC SITE NAME: SPOUT SPRINGS NC

AT&T MOBILITY SITE NUMBER:

SINC001601

AT&T MOBILITY SITE NAME:

368-389

SITE ADDRESS:
641 NC HWY 24-87
CAMERON, NC 27332-6191

TEP Engineering, PLLC P-1403

NORTH CAROLINA PROFESSIONAL SEAL 048226 ENGINEER SCOTT C. BRAMLEY

SEAL: 04/22/25

AT&T

DATE DRAWN:	04/22/25
ATC JOB NO:	14884017
CUSTOMER NAME:	368-389
CUSTOMER ID:	SINC001601

APPENDIX B

SHEET NUMBER:	REVISION:
G-005	1

Copyright © 2025 ATC IP LLC, All Rights Reserved

ENERGY SUMMARY

ENERGY REQUIREMENTS:
The following data shall be considered minimum and an[illegible]bute required to meet the energy code shall also be provided. Each Designer shall furnish the requ[illegible] project information for the plan data sheet. If performance method, state the annual energy cos[illegible]ference design vs annual energy cost for the proposed design.

Existing building envelope complies wit[illegible] ☐ Yes (The remainder of this section is not applicable)

Exempt Building: ☐ No ☐ Y[illegible]utory reference): _____

Climate Zone: ☐ 3A [illegible]

Method of Compliance: Energy [illegible]de ☐ Performance ☐ Prescriptive
ASHRAE 90.1 ☐ Performance ☐ Prescriptive
(If "Other" specify source here)_____

THERMAL ENVELOPE (Prescriptive method only)

Roof/ceiling Assembly (each assembly)
Description of assembly: _____
U-Value of total assembly: _____
R-Value of insulation: _____
Skylights in each assembly: _____
U-Value of skylight: _____
total square footage of skylights in each assemb[illegible] _____

Exterior Walls (each assembly)
Description of assembly: _____
U-Value of total assembly: _____
R-Value of insulation: _____
Openings (windows or doors [illegible]
U-Value of assem[illegible] _____
Solar heat gain [illegible] _____
projection f[illegible] _____
Door R-Va[illegible] _____

Walls below grade (each assembly)
Description of assembly: _____
U-Value of total assembly: _____
R-Value of insulation: _____

Floors over unconditioned space (each assembly)
Description of assembly: _____
U-Value of total assembly: _____
R-Value of insulation: _____

Floors slab on grade
Description of assembly: _____
U-Value of total assembly: _____
R-Value of insulation: _____
Horizontal/vertical requirement: _____
slab heated: _____

N/A
NOT A BUILDING

2018 APPENDIX B
BUILDING CODE SUMMARY FOR ALL COMMERCIAL PROJECTS
STRUCTURAL DESIGN
(PROVIDE ON THE STRUCTURAL SHEETS IF APPLICABLE)

DESIGN LOADS:

Importance Factors: Snow (I_S) _____
Seismic (I_E) _____

Live Loads: Roof _____ psf
Mezzanine _____ psf
Floor _____ psf

Ground Snow Load: _____ psf

Wind Load: Basic Wind Speed [illegible] (ASCE-7)
Exposure Category [illegible]

SEISMIC DESIGN CATEGORY: ☐ [illegible] ☐ [illegible] ☐ D

Provide the following Seismic Design P[illegible]
Risk Category (Table 1604[illegible] ☐ III ☐ IV
Spectral Response Accel[illegible] [illegible] _____ %g S_1_____ %g
Site Classification (ASCE 7) [illegible] ☐ B ☐ C ☐ D ☐ E ☐ F
Data Source: ☐ [illegible]ld Test ☐ Presumptive ☐ Historical Data
Basic structural system ☐ Bearing Wall ☐ Dual w/Special Moment Frame
☐ Building Frame ☐ Dual w/Intermediate R/C or Special Steel
☐ Moment Frame ☐ Inverted Pendulum
Analysis Procedure: ☐ Simplified ☐ Equivalent Lateral Force ☐ Dynamic
Architectural, Mechanical, Components anchored? ☐ Yes ☐ No

LATERAL DESIGN CONTROL: Earthquake ☐ Wind ☐

SOIL BEARING CAPACITIES:
Field Test (provide copy of test report) _____ psf
Presumptive Bearing capacity _____ psf
Pile size, type, and capacity _____

N/A
NOT A BUILDING

AMERICAN TOWER®

PLANS PREPARED BY:

TEP

TEP ENGINEERING, PLLC
326 TRYON ROAD
RALEIGH, NC 27603-3530
OFFICE: (919) 661-6351
www.tepgroup.net
N.C. LICENSE #P-1403

TEP IS A FAMILY OF COMPANIES LICENSED TO PROVIDE DIFFERENT SERVICES IN DIFFERENT JURISDICTIONS. DEPENDING ON THE JURISDICTION, PROFESSIONAL ENGINEERING AND LAND SURVEYING SERVICES ARE PROVIDED BY TEP OPCO LLC, A DELAWARE LIMITED LIABILITY COMPANY, TEP ENGINEERING, LLC, A NORTH CAROLINA PROFESSIONAL LIMITED LIABILITY COMPANY, OR M&H ENGINEERING, LLC, A NEW YORK PROFESSIONAL LIMITED LIABILITY COMPANY. GENERAL CONTRACTOR SERVICES ARE PROVIDED BY TEP OPCO LLC, A DELAWARE LIMITED LIABILITY COMPANY. WE ACQUIRE THE REQUISITE LICENSES IN EACH STATE. ADDITIONAL INFORMATION CAN BE OBTAINED FROM THE COMPANY.

REV.	DESCRIPTION	BY	DATE
A	PRELIMINARY	APM	03/12/25
0	100% CONSTRUCTION	APM	03/20/25
1	100% CONSTRUCTION	SSP	04/22/25

ATC SITE NUMBER: 280251

ATC SITE NAME: SPOUT SPRINGS NC

AT&T MOBILITY SITE NUMBER:
SINC001601

AT&T MOBILITY SITE NAME:
368-389

SITE ADDRESS:
641 NC HWY 24-87
CAMERON, NC 27332-6191

TEP Engineering, PLLC P-1403

NORTH CAROLINA PROFESSIONAL SEAL 048226 ENGINEER SCOTT C. BRANTLEY

SEAL: 04/22/25

AT&T

DATE DRAWN:	04/22/25
ATC JOB NO:	14884017
CUSTOMER NAME:	368-389
CUSTOMER ID:	SINC001601

APPENDIX B

SHEET NUMBER:	REVISION:
G-006	1

Copyright © 2025 ATC IP LLC, All Rights Reserved

2018 APPENDIX B
BUILDING CODE SUMMARY FOR ALL COMMERCIAL PROJECTS
MECHANICAL DESIGN
(PROVIDE ON THE MECHANICAL SHEETS IF APPLICABLE)

MECHANICAL SUMMARY

MECHANICAL SYSTEMS, SERVICE SYSTEMS AND EQUIPMENT

Thermal Zone

winter dry bulb: _____
summer dry bulb: _____

Interior design conditions

winter dry bulb: _____
summer dry bulb: _____
relative humidity: _____

Building heating load: _____

Building cooling load: _____

N/A
NOT A BUILDING

Mechanical Spacing Conditioning System

Unitary
- description of unit: _____
- heating efficiency: _____
- cooling efficiency: _____
- size category of unit: _____

Boiler
- Size category. If oversized, state reason.: _____

Chiller
- Size category. If oversized, state reason.: _____

List equipment efficiencies: _____

2018 APPENDIX B
BUILDING CODE SUMMARY FOR ALL COMMERCIAL PROJECTS
ELECTRICAL DESIGN
(PROVIDE ON THE ELECTRICAL SHEETS IF APPLICABLE)

ELECTRICAL SUMMARY

ELECTRICAL SYSTEM AND EQUIPMENT

Method of Compliance: Energy Code ☐ Perfor[illegible]ce ☐ Prescriptive
ASHRAE 90.1 ☐ Per[illegible] ☐ Prescriptive

Lighting schedule (each fixture type)

lamp type required in fixture
number of lamps in fixture
ballast type used in the fi[illegible]
number of ballasts in [illegible]
total wattage per fi[illegible]
total interior wa[illegible]owed (whole building or space by space)
total exterior wa[illegible]. allowed

N/A
NOT A BUILDING

Additional Efficiency Packag[illegible]tions
(When using the 2018 NCECC; not required for ASHRAE 90.1)

- ☐ C406.2 More Efficient HVAC Equipment Performance
- ☐ C406.3 Reduced Lighting Power Density
- ☐ C406.4 Enhanced Digital Lighting Controls
- ☐ C406.5 On-Site Renewable Energy
- ☐ C406.6 Dedicated Outdoor Air System
- ☐ C406.7 Reduced Energy Use in Service Water Heating

AMERICAN TOWER®

PLANS PREPARED BY:

TEP

TEP ENGINEERING, PLLC
326 TRYON ROAD
RALEIGH, NC 27603-3530
OFFICE: (919) 661-6351
www.tepgroup.net
N.C. LICENSE #P-1403

TEP IS A FAMILY OF COMPANIES LICENSED TO PROVIDE DIFFERENT SERVICES IN DIFFERENT JURISDICTIONS. DEPENDING ON THE JURISDICTION, PROFESSIONAL ENGINEERING AND LAND SURVEYING SERVICES ARE PROVIDED BY TEP OPCO LLC, A DELAWARE LIMITED LIABILITY COMPANY, TEP ENGINEERING, LLC, A NORTH CAROLINA PROFESSIONAL LIMITED LIABILITY COMPANY, OR M&H ENGINEERING, LLC, A NEW YORK PROFESSIONAL LIMITED LIABILITY COMPANY. GENERAL CONTRACTOR SERVICES ARE PROVIDED BY TEP OPCO LLC, A DELAWARE LIMITED LIABILITY COMPANY. WE ACQUIRE THE REQUISITE LICENSES IN EACH STATE. ADDITIONAL INFORMATION CAN BE OBTAINED FROM THE COMPANY.

REV.	DESCRIPTION	BY	DATE
A	PRELIMINARY	APM	03/12/25
0	100% CONSTRUCTION	APM	03/20/25
1	100% CONSTRUCTION	SSP	04/22/25

ATC SITE NUMBER: 280251

ATC SITE NAME: SPOUT SPRINGS NC

AT&T MOBILITY SITE NUMBER:

SINC001601

AT&T MOBILITY SITE NAME:

368-389

SITE ADDRESS:
641 NC HWY 24-87
CAMERON, NC 27332-6191

TEP Engineering, PLLC P-1403

NORTH CAROLINA PROFESSIONAL SEAL 048226 ENGINEER SCOTT C. BRANTLEY

SEAL: 04/22/25

AT&T

DATE DRAWN:	04/22/25
ATC JOB NO:	14884017
CUSTOMER NAME:	368-389
CUSTOMER ID:	SINC001601

APPENDIX B

SHEET NUMBER:	REVISION:
G-007	1

Copyright © 2025 ATC IP LLC, All Rights Reserved

NOTES:

1. BOUNDARY LINES OBTAINED FROM HARNETT COUNTY ONLINE GIS.
2. ZONING INFORMATION OBTAINED FROM HARNETT COUNTY.
3. THE TOWER IS LOCATED IN ZONE "X," AREAS DETERMINED TO BE OUTSIDE THE 0.2% ANNUAL CHANCE FLOODPLAIN ACCORDING TO FEMA COMMUNITY PANEL #3710958400J, DATED OCTOBER 03, 2006.

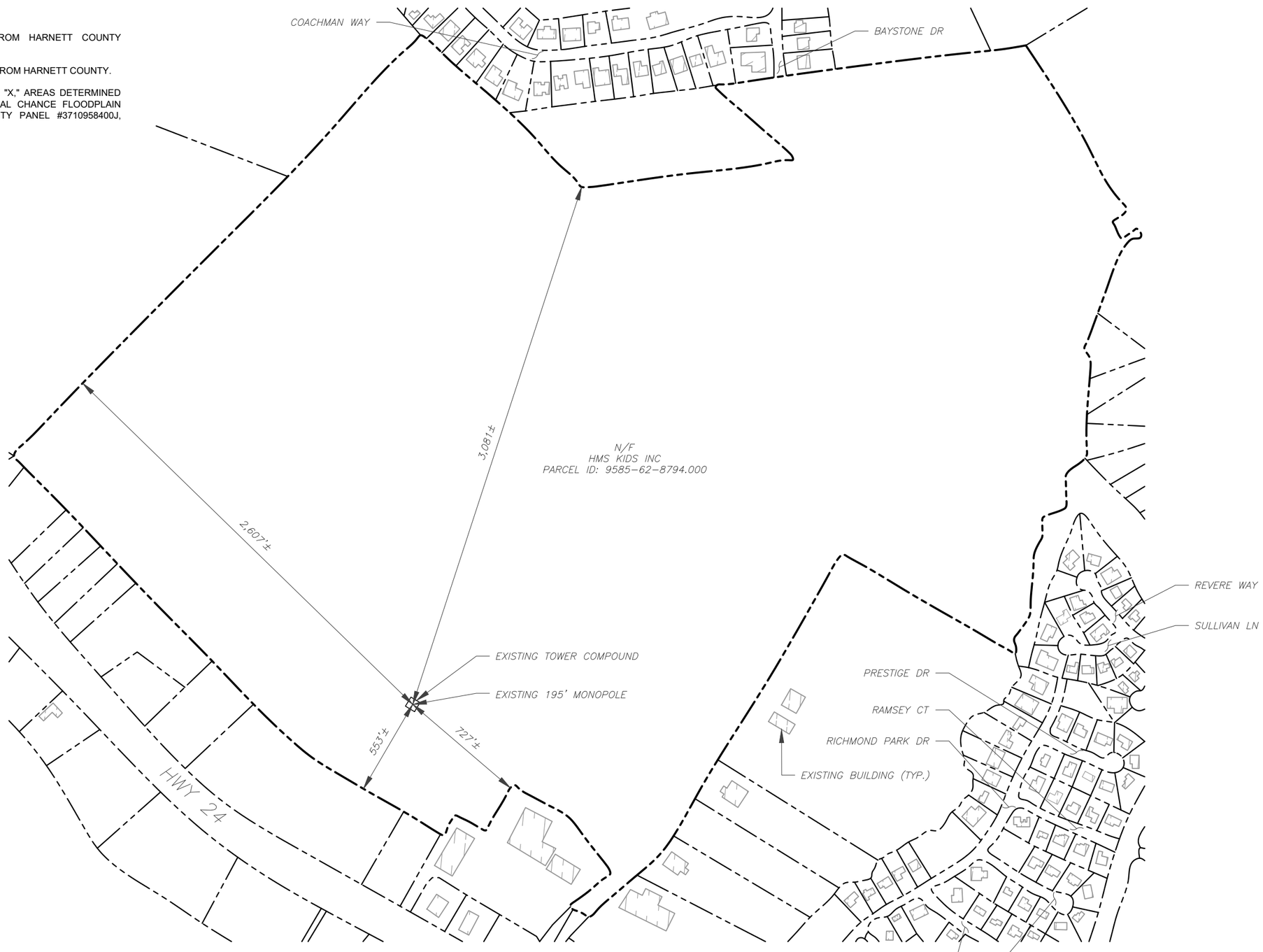

1 OVERALL SITE PLAN
SCALE: 1" = 600'

0 600' 1200'

SCALE: 1"=600' (11X17)
1"=300' (22X34)

LEGEND

- EXISTING PROPERTY LINE
- EXISTING ADJACENT PROPERTY LINE
- EXISTING LEASE AREA

AMERICAN TOWER®

PLANS PREPARED BY:

TEP

TEP ENGINEERING, PLLC
326 TRYON ROAD
RALEIGH, NC 27603-3530
OFFICE: (919) 661-6351
www.tepgroup.net
N.C. LICENSE #P-1403

TEP IS A FAMILY OF COMPANIES LICENSED TO PROVIDE DIFFERENT SERVICES IN DIFFERENT JURISDICTIONS. DEPENDING ON THE JURISDICTION, PROFESSIONAL ENGINEERING AND LAND SURVEYING SERVICES ARE PROVIDED BY TEP OPCO LLC, A DELAWARE LIMITED LIABILITY COMPANY, TEP ENGINEERING, LLC, A NORTH CAROLINA PROFESSIONAL LIMITED LIABILITY COMPANY, OR M&H ENGINEERING, LLC, A NEW YORK PROFESSIONAL LIMITED LIABILITY COMPANY. GENERAL CONTRACTOR SERVICES ARE PROVIDED BY TEP OPCO LLC, A DELAWARE LIMITED LIABILITY COMPANY. WE ACQUIRE THE REQUISITE LICENSES IN EACH STATE. ADDITIONAL INFORMATION CAN BE OBTAINED FROM THE COMPANY.

REV.	DESCRIPTION	BY	DATE
A	PRELIMINARY	APM	03/12/25
0	100% CONSTRUCTION	APM	03/20/25
1	100% CONSTRUCTION	SSP	04/22/25

ATC SITE NUMBER: 280251

ATC SITE NAME: SPOUT SPRINGS NC

AT&T MOBILITY SITE NUMBER:

SINC001601

AT&T MOBILITY SITE NAME:

368-389

SITE ADDRESS:
641 NC HWY 24-87
CAMERON, NC 27332-6191

TEP Engineering, PLLC P-1403

NORTH CAROLINA PROFESSIONAL SEAL 048226 ENGINEER SCOTT C. BRAWLEY

SEAL: 04/22/25

AT&T

DATE DRAWN:	04/22/25
ATC JOB NO:	14884017
CUSTOMER NAME:	368-389
CUSTOMER ID:	SINC001601

OVERALL SITE PLAN

SHEET NUMBER:	REVISION:
C-001	1

Copyright © 2025 ATC IP LLC, All Rights Reserved

SITE PLAN NOTES:

1. THIS SITE PLAN REPRESENTS THE BEST PRESENT KNOWLEDGE AVAILABLE TO THE ENGINEER AT THE TIME OF THIS DESIGN. THE CONTRACTOR SHALL VISIT THE SITE PRIOR TO CONSTRUCTION AND VERIFY ALL EXISTING CONDITIONS RELATED TO THE SCOPE OF WORK FOR THIS PROJECT.

2. ICE BRIDGE, CABLE LADDER, COAX PORT, AND COAX CABLE ARE SHOWN FOR REFERENCE ONLY. CONTRACTOR SHALL CONFIRM THE EXACT LOCATION OF ALL PROPOSED AND EXISTING EQUIPMENT AND STRUCTURES DEPICTED ON THIS PLAN. BEFORE UTILIZING EXISTING CABLE SUPPORTS, COAX PORTS, INSTALLING NEW PORTS OR ANY OTHER EQUIPMENT, CONTRACTOR SHALL VERIFY ALL ASPECTS OF THE COMPONENTS MEET THE ATC SPECIFICATIONS.

3. IT IS THE RESPONSIBILITY OF THE CONTRACTOR TO COORDINATE WITH THE T-MOBILE REPRESENTATIVE AND LOCAL UTILITY COMPANY FOR THE INSTALLATION OF CONDUITS, CONDUCTORS, BREAKERS, DISCONNECTS, OR ANY OTHER EQUIPMENT REQUIRED FOR ELECTRICAL SERVICE. ALL ELECTRICAL WORK SHALL BE PERFORMED IN ACCORDANCE WITH LATEST EDITION OF THE STATE AND NATIONAL CODES, ORDINANCES AND REGULATIONS APPLICABLE TO THIS PROJECT.

LEGEND

⊗	GROUNDING TEST WELL
ATS	AUTOMATIC TRANSFER SWITCH
B	BOLLARD
CSC	CELL SITE CABINET
D	DISCONNECT
E	ELECTRICAL
F	FIBER
GEN	GENERATOR
G	GENERATOR RECEPTACLE
HH, V	HAND HOLE, VAULT
IB	ICE BRIDGE
K	KENTROX BOX
LC	LIGHTING CONTROL
M	METER
PB	PULL BOX
PP	POWER POLE
T	TELCO
TRN	TRANSFORMER
—— x ——	CHAINLINK FENCE

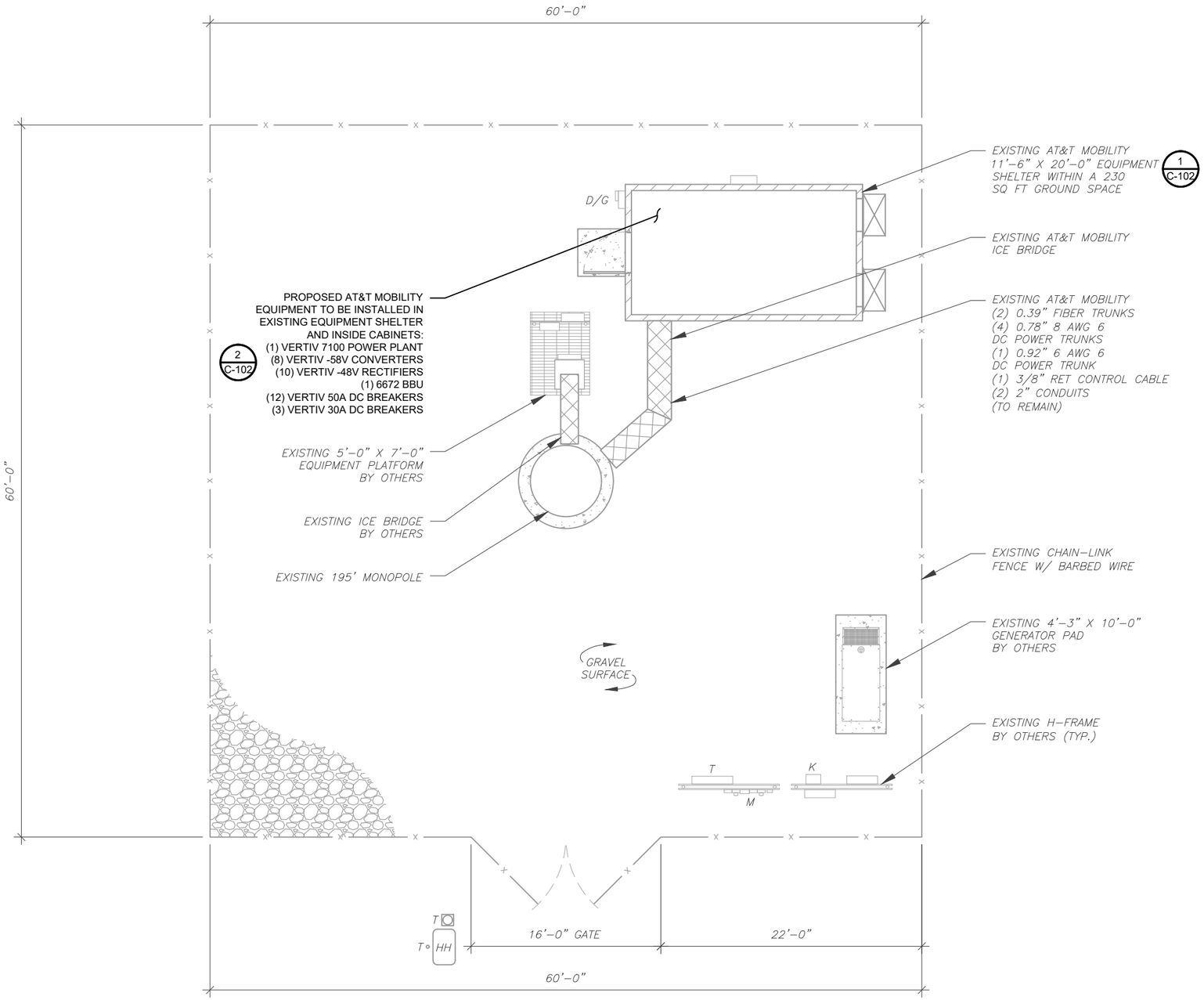

1 DETAILED SITE PLAN

SCALE: 1" = 10'

0 10' 20'

SCALE: 1"=10' (11X17)
1"=5' (22X34)

AMERICAN TOWER®

PLANS PREPARED BY:

TEP

TEP ENGINEERING, PLLC
326 TRYON ROAD
RALEIGH, NC 27603-3530
OFFICE: (919) 661-6351
www.tepgroup.net
N.C. LICENSE #P-1403

TEP IS A FAMILY OF COMPANIES LICENSED TO PROVIDE DIFFERENT SERVICES IN DIFFERENT JURISDICTIONS. DEPENDING ON THE JURISDICTION, PROFESSIONAL ENGINEERING AND LAND SURVEYING SERVICES ARE PROVIDED BY TEP OPCO LLC, A DELAWARE LIMITED LIABILITY COMPANY, TEP ENGINEERING, LLC, A NORTH CAROLINA PROFESSIONAL LIMITED LIABILITY COMPANY, OR M&H ENGINEERING, LLC, A NEW YORK PROFESSIONAL LIMITED LIABILITY COMPANY. GENERAL CONTRACTOR SERVICES ARE PROVIDED BY TEP OPCO LLC, A DELAWARE LIMITED LIABILITY COMPANY. WE ACQUIRE THE REQUISITE LICENSES IN EACH STATE. ADDITIONAL INFORMATION CAN BE OBTAINED FROM THE COMPANY.

REV.	DESCRIPTION	BY	DATE
A	PRELIMINARY	APM	03/12/25
0	100% CONSTRUCTION	APM	03/20/25
1	100% CONSTRUCTION	SSP	04/22/25

ATC SITE NUMBER: 280251

ATC SITE NAME: SPOUT SPRINGS NC

AT&T MOBILITY SITE NUMBER:

SINC001601

AT&T MOBILITY SITE NAME:

368-389

SITE ADDRESS:
641 NC HWY 24-87
CAMERON, NC 27332-6191

TEP Engineering, PLLC P-1403

NORTH CAROLINA PROFESSIONAL SEAL 048226 ENGINEER SCOTT C. BRANTLEY

SEAL: 04/22/25

AT&T

DATE DRAWN:	04/22/25
ATC JOB NO:	14884017
CUSTOMER NAME:	368-389
CUSTOMER ID:	SINC001601

DETAILED SITE PLAN

SHEET NUMBER:	REVISION:
C-101	1

Copyright © 2025 ATC IP LLC, All Rights Reserved

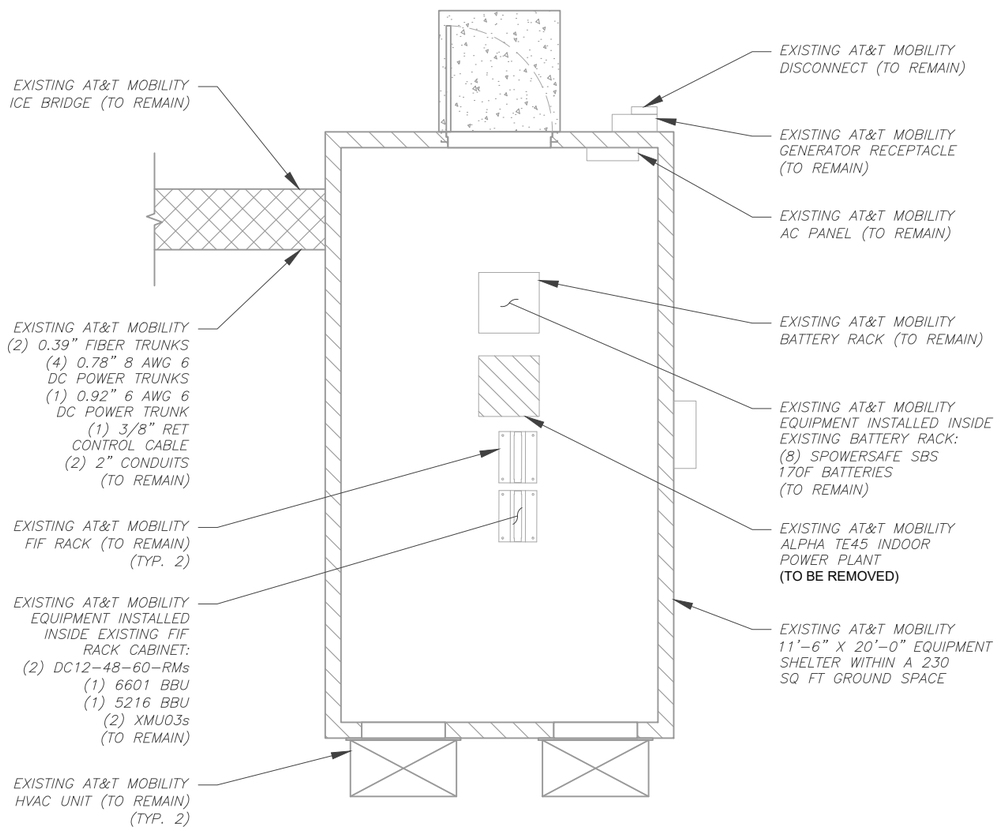

1 EXISTING DETAILED EQUIPMENT LAYOUT

SCALE: 1" = 5'

0 5' 10'

SCALE: 1"=5' (11X17)
1"=2.5' (22X34)

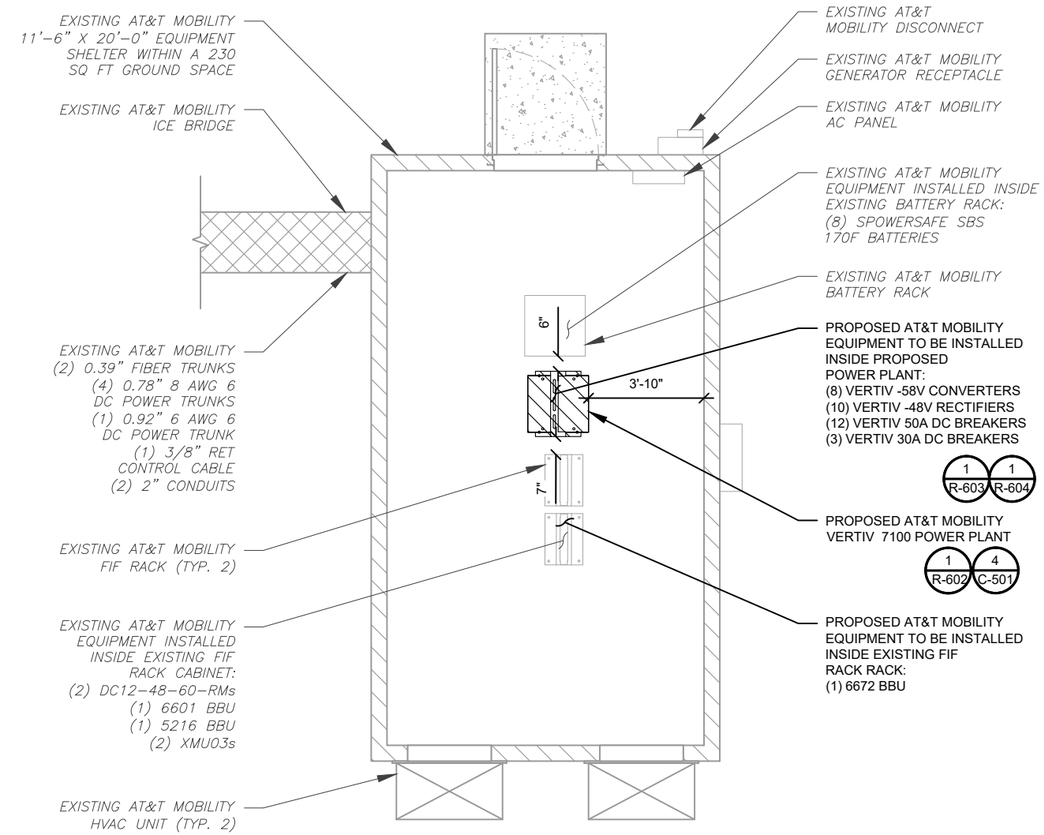

2 PROPOSED DETAILED EQUIPMENT LAYOUT

SCALE: 1" = 5'

0 5' 10'

SCALE: 1"=5' (11X17)
1"=2.5' (22X34)

AMERICAN TOWER®

PLANS PREPARED BY:

TEP

TEP ENGINEERING, PLLC
326 TRYON ROAD
RALEIGH, NC 27603-3530
OFFICE: (919) 661-6351
www.tepgroup.net
N.C. LICENSE #P-1403

TEP IS A FAMILY OF COMPANIES LICENSED TO PROVIDE DIFFERENT SERVICES IN DIFFERENT JURISDICTIONS. DEPENDING ON THE JURISDICTION, PROFESSIONAL ENGINEERING AND LAND SURVEYING SERVICES ARE PROVIDED BY TEP OPCO LLC, A DELAWARE LIMITED LIABILITY COMPANY, TEP ENGINEERING, LLC, A NORTH CAROLINA PROFESSIONAL LIMITED LIABILITY COMPANY, OR M&H ENGINEERING, LLC, A NEW YORK PROFESSIONAL LIMITED LIABILITY COMPANY. GENERAL CONTRACTOR SERVICES ARE PROVIDED BY TEP OPCO LLC, A DELAWARE LIMITED LIABILITY COMPANY. WE ACQUIRE THE REQUISITE LICENSES IN EACH STATE. ADDITIONAL INFORMATION CAN BE OBTAINED FROM THE COMPANY.

REV.	DESCRIPTION	BY	DATE
A	PRELIMINARY	APM	03/12/25
0	100% CONSTRUCTION	APM	03/20/25
1	100% CONSTRUCTION	SSP	04/22/25

ATC SITE NUMBER: 280251

ATC SITE NAME: SPOUT SPRINGS NC

AT&T MOBILITY SITE NUMBER:

SINC001601

AT&T MOBILITY SITE NAME:

368-389

SITE ADDRESS:
641 NC HWY 24-87
CAMERON, NC 27332-6191

TEP Engineering, PLLC P-1403

NORTH CAROLINA PROFESSIONAL SEAL 048226 ENGINEER SCOTT C. BRANTLEY

SEAL: 04/22/25

AT&T

DATE DRAWN:	04/22/25
ATC JOB NO:	14884017
CUSTOMER NAME:	368-389
CUSTOMER ID:	SINC001601

DETAILED EQUIPMENT LAYOUT

SHEET NUMBER:	REVISION:
C-102	1

Copyright © 2025 ATC IP LLC, All Rights Reserved

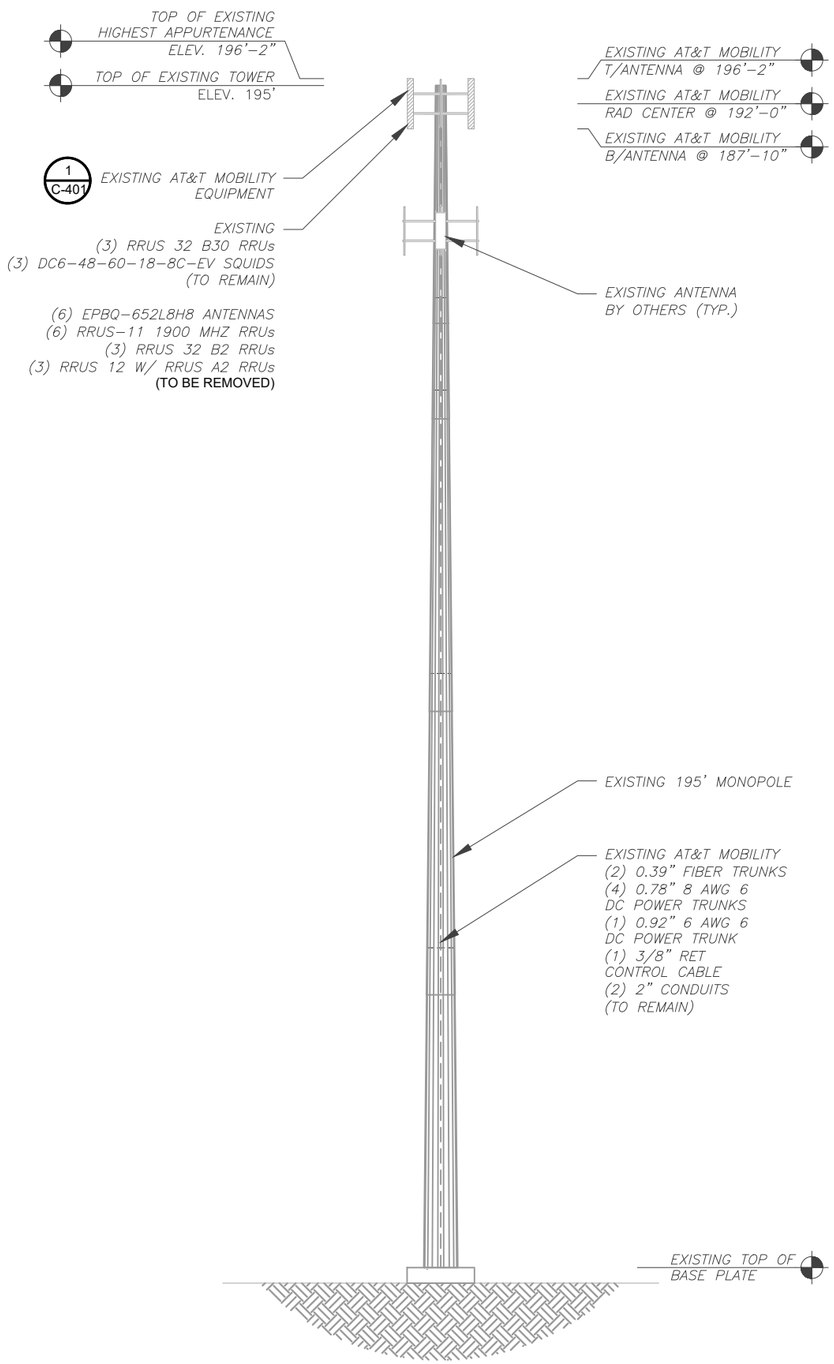

1 EXISTING TOWER ELEVATION

SCALE: 1" = 25'

0 25' 50'

SCALE: 1"=25' (11X17)
1"=12.5' (22X34)

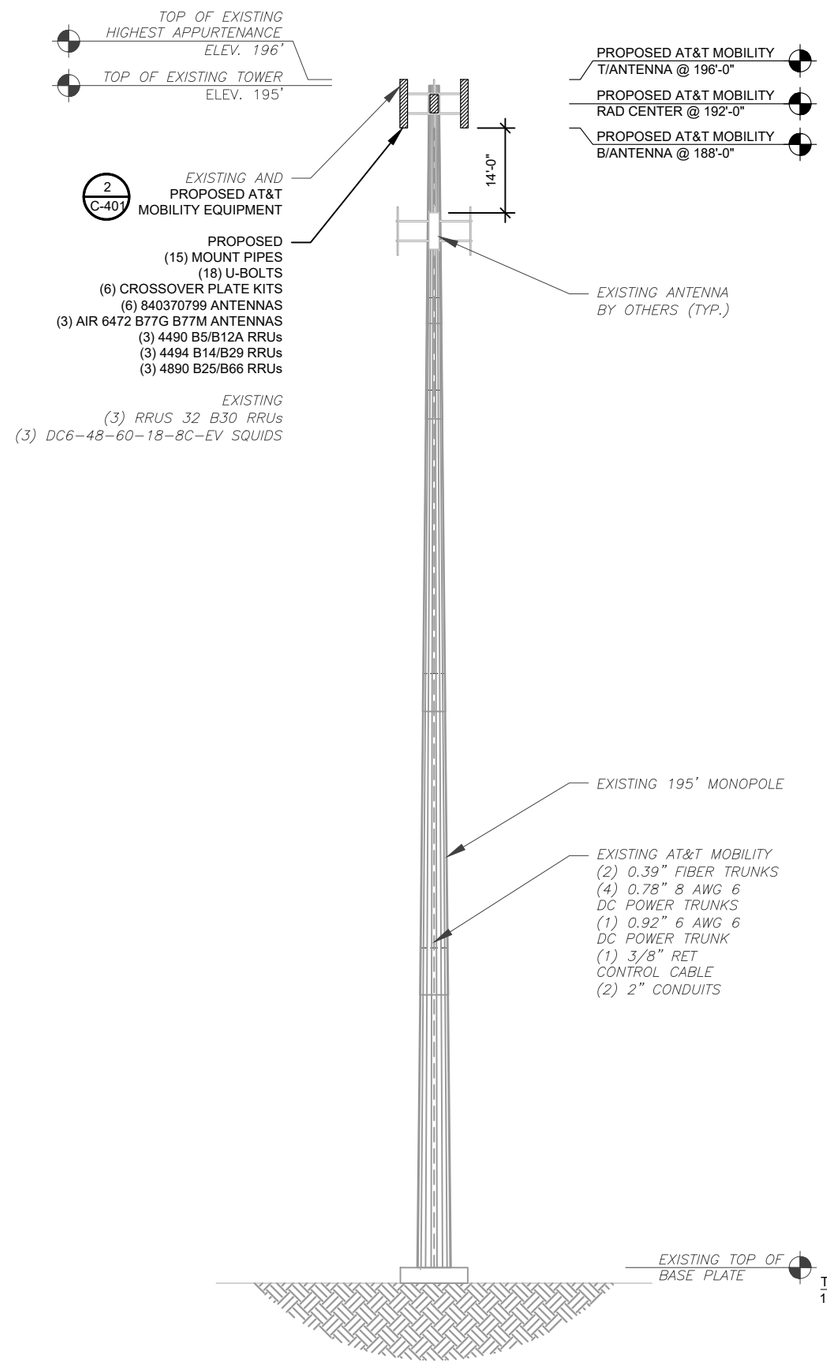

2 PROPOSED TOWER ELEVATION

SCALE: 1" = 25'

0 25' 50'

SCALE: 1"=25' (11X17)
1"=12.5' (22X34)

PER MOUNT ANALYSIS COMPLETED BY AMERICAN TOWER CORPORATION, DATED MARCH 05, 2025, THE EXISTING MOUNT MUST BE MODIFIED TO ADEQUATELY SUPPORT THE PROPOSED LOADING. THE MOUNT MODIFICATION PROPOSED IN THE MOUNT ANALYSIS, INCLUDED AT THE END OF THIS PLAN SET, MUST BE INSTALLED PRIOR TO THE INSTALLATION OF THE PROPOSED ANTENNAS AND OTHER EQUIPMENT.

TOWER NOTES:

1. IT IS THE CONTRACTOR'S RESPONSIBILITY TO CONFIRM WITH THE PROJECT MANAGER THAT THEY HAVE THE MOST RECENT VERSION OF THE STRUCTURAL ANALYSIS BEFORE COMMENCING WORK. EXISTING AND PROPOSED TOWER APPURTENANCES, MOUNTS, AND ANTENNAS ARE SHOWN BASED ON THE STRUCTURAL ANALYSIS.
2. WHERE APPLICABLE, ALL NEW ANTENNAS, EQUIPMENT, MOUNTS, CABLING, ETC. SHALL BE PAINTED/SOCKED TO MATCH EXISTING EQUIPMENT IN ACCORDANCE WITH FAA, JURISDICTION, AND/OR OTHER LOCAL REQUIREMENTS.
3. TOWER ELEVATION DEPICTION MAY NOT REFLECT ALL EQUIPMENT INCLUDED IN STRUCTURAL ANALYSIS. REFER TO STRUCTURAL ANALYSIS FOR FULL TOWER LOADING.

AMERICAN TOWER®

PLANS PREPARED BY:

TEP

TEP ENGINEERING, PLLC
326 TRYON ROAD
RALEIGH, NC 27603-3530
OFFICE: (919) 661-6351
www.tepgroup.net
N.C. LICENSE #P-1403

TEP IS A FAMILY OF COMPANIES LICENSED TO PROVIDE DIFFERENT SERVICES IN DIFFERENT JURISDICTIONS. DEPENDING ON THE JURISDICTION, PROFESSIONAL ENGINEERING AND LAND SURVEYING SERVICES ARE PROVIDED BY TEP OPCO LLC, A DELAWARE LIMITED LIABILITY COMPANY, TEP ENGINEERING, LLC, A NORTH CAROLINA PROFESSIONAL LIMITED LIABILITY COMPANY, OR M&H ENGINEERING, LLC, A NEW YORK PROFESSIONAL LIMITED LIABILITY COMPANY. GENERAL CONTRACTOR SERVICES ARE PROVIDED BY TEP OPCO LLC, A DELAWARE LIMITED LIABILITY COMPANY. WE ACQUIRE THE REQUISITE LICENSES IN EACH STATE. ADDITIONAL INFORMATION CAN BE OBTAINED FROM THE COMPANY.

REV.	DESCRIPTION	BY	DATE
A	PRELIMINARY	APM	03/12/25
0	100% CONSTRUCTION	APM	03/20/25
1	100% CONSTRUCTION	SSP	04/22/25

ATC SITE NUMBER: 280251

ATC SITE NAME: SPOUT SPRINGS NC

AT&T MOBILITY SITE NUMBER:

SINC001601

AT&T MOBILITY SITE NAME:

368-389

SITE ADDRESS:
641 NC HWY 24-87
CAMERON, NC 27332-6191

TEP Engineering, PLLC P-1403

SEAL: 04/22/25

AT&T

DATE DRAWN:	04/22/25
ATC JOB NO:	14884017
CUSTOMER NAME:	368-389
CUSTOMER ID:	SINC001601

TOWER ELEVATION

SHEET NUMBER:	REVISION:
C-201	1

Copyright © 2025 ATC IP LLC, All Rights Reserved

EXISTING CONFIGURATIONS ARE BASED ON RFDS.
CONTRACTOR TO VERIFY EXISTING CONDITIONS.

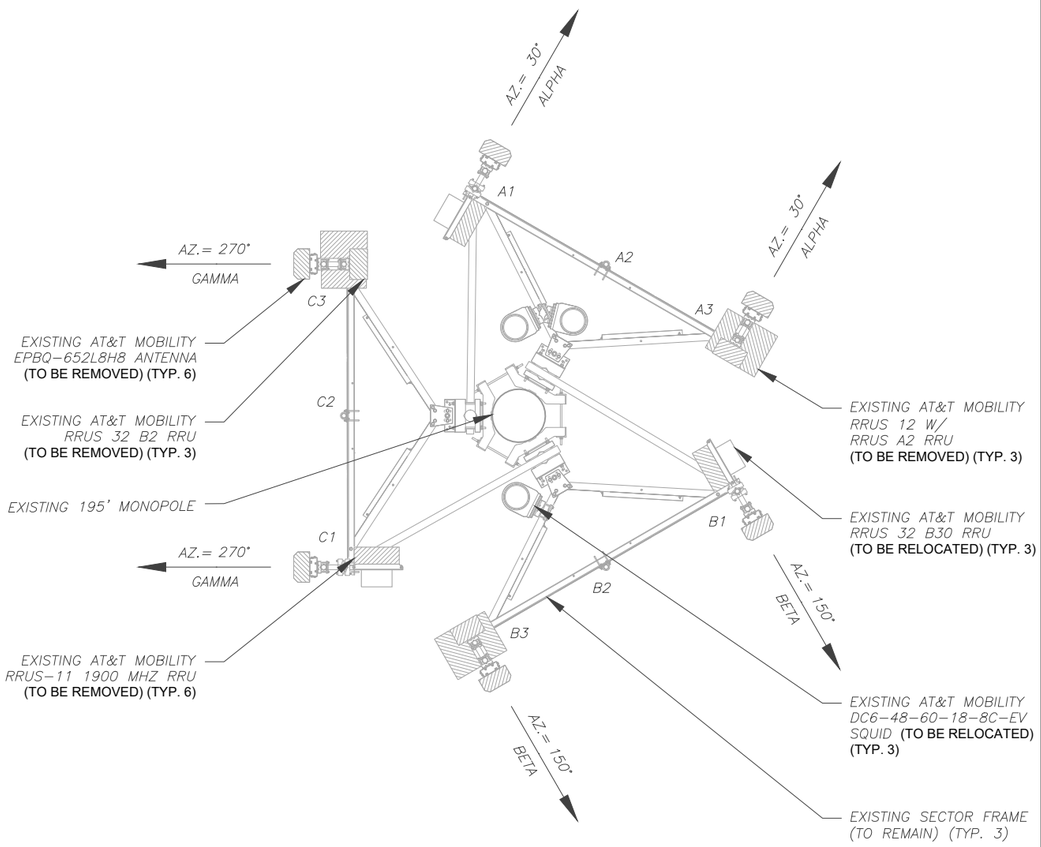

1 EXISTING ANTENNA PLAN
SCALE: 1" = 5'

0 5' 10'
SCALE: 1"=5' (11X17)
1"=2.5' (22X34)

PER MOUNT ANALYSIS COMPLETED BY AMERICAN TOWER CORPORATION, DATED MARCH 05, 2025, THE EXISTING MOUNT MUST BE MODIFIED TO ADEQUATELY SUPPORT THE PROPOSED LOADING. THE MOUNT MODIFICATION PROPOSED IN THE MOUNT ANALYSIS, INCLUDED AT THE END OF THIS PLAN SET, MUST BE INSTALLED PRIOR TO THE INSTALLATION OF THE PROPOSED ANTENNAS AND OTHER EQUIPMENT.

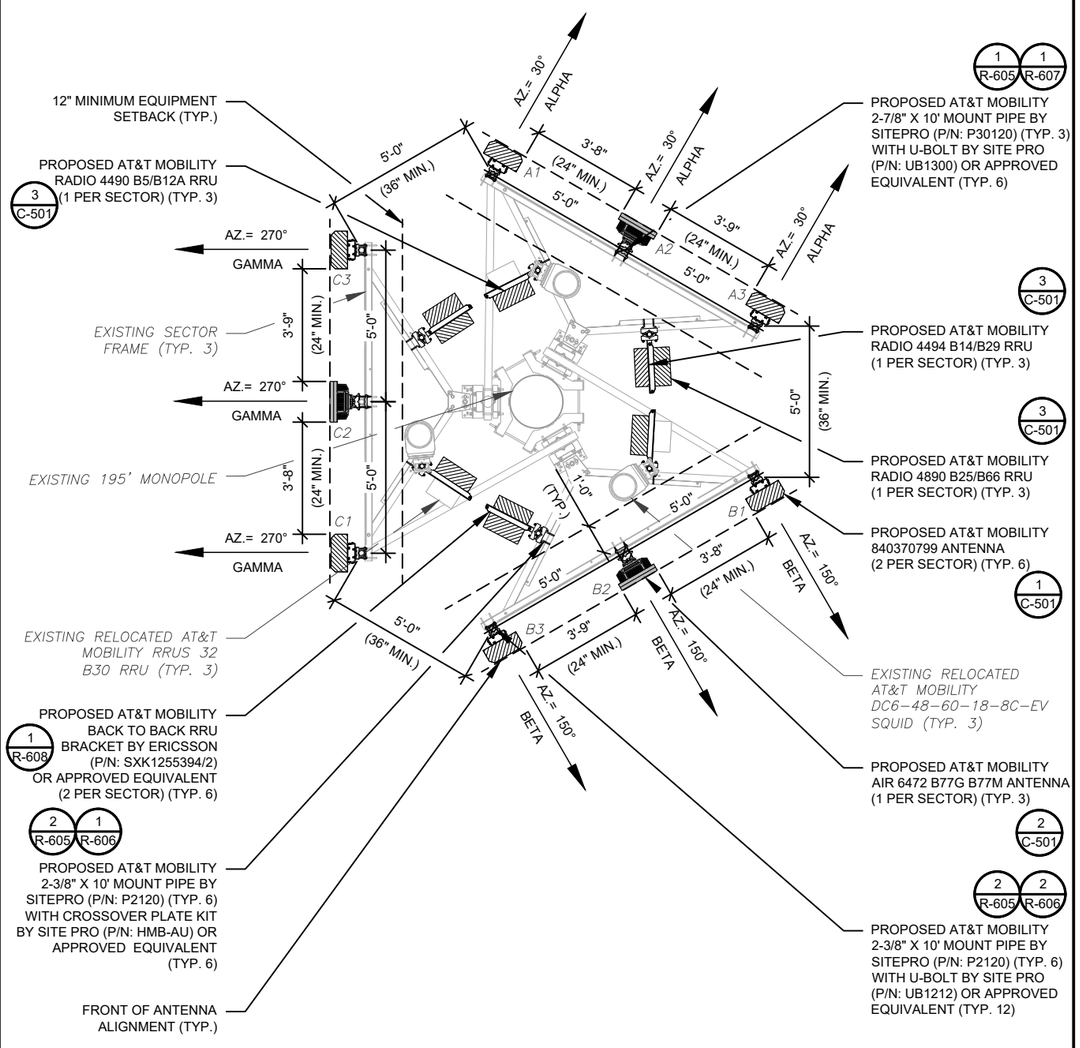

2 FINAL ANTENNA PLAN
SCALE: 1" = 5'

0 5' 10'
SCALE: 1"=5' (11X17)
1"=2.5' (22X34)

PROPOSED RRUs MUST BE INSTALLED A MINIMUM OF 12" AWAY FROM HORIZONTAL MOUNTING PIPE

AMERICAN TOWER®

PLANS PREPARED BY:

TEP

TEP ENGINEERING, PLLC
326 TRYON ROAD
RALEIGH, NC 27603-3530
OFFICE: (919) 661-6351
www.tepgroup.net
N.C. LICENSE #P-1403

TEP IS A FAMILY OF COMPANIES LICENSED TO PROVIDE DIFFERENT SERVICES IN DIFFERENT JURISDICTIONS. DEPENDING ON THE JURISDICTION, PROFESSIONAL ENGINEERING AND LAND SURVEYING SERVICES ARE PROVIDED BY TEP OPCO LLC, A DELAWARE LIMITED LIABILITY COMPANY, TEP ENGINEERING, LLC, A NORTH CAROLINA PROFESSIONAL LIMITED LIABILITY COMPANY, OR M&H ENGINEERING, LLC, A NEW YORK PROFESSIONAL LIMITED LIABILITY COMPANY. GENERAL CONTRACTOR SERVICES ARE PROVIDED BY TEP OPCO LLC, A DELAWARE LIMITED LIABILITY COMPANY. WE ACQUIRE THE REQUISITE LICENSES IN EACH STATE. ADDITIONAL INFORMATION CAN BE OBTAINED FROM THE COMPANY.

REV.	DESCRIPTION	BY	DATE
A	PRELIMINARY	APM	03/12/25
0	100% CONSTRUCTION	APM	03/20/25
1	100% CONSTRUCTION	SSP	04/22/25

ATC SITE NUMBER: 280251

ATC SITE NAME: SPOUT SPRINGS NC

AT&T MOBILITY SITE NUMBER:

SINC001601

AT&T MOBILITY SITE NAME:

368-389

SITE ADDRESS:
641 NC HWY 24-87
CAMERON, NC 27332-6191

TEP Engineering, PLLC P-1403

SEAL: 04/22/25

AT&T

DATE DRAWN:	04/22/25
ATC JOB NO:	14884017
CUSTOMER NAME:	368-389
CUSTOMER ID:	SINC001601

ANTENNA INSTALLATION

SHEET NUMBER:	REVISION:
C-401	1

Copyright © 2025 ATC IP LLC, All Rights Reserved

EXISTING ANTENNA SCHEDULE

LOCATION			ANTENNA SUMMARY				NON ANTENNA SUMMARY	
SECTOR	RAD	AZ	POS	ANTENNA	BAND	STATUS	ADDITIONAL TOWER MOUNTED EQUIPMENT	STATUS
ALPHA	192'	30°	A1	EPBQ-652L8H8	–	RMV	(1) RRUS 32 B30 (1) RRUS-11 1900 MHZ	REL RMV
			A2	–	–	–	–	–
			A3	EPBQ-652L8H8	–	RMV	(1) RRUS 32 B2 (1) RRUS 12 W/ RRUS A2 (1) RRUS-11 1900 MHZ	RMV RMV RMV
BETA	192'	150°	B1	EPBQ-652L8H8	–	RMV	(1) RRUS 32 B30 (1) RRUS-11 1900 MHZ	REL RMV
			B2	–	–	–	–	–
			B3	EPBQ-652L8H8	–	RMV	(1) RRUS 32 B2 (1) RRUS 12 W/ RRUS A2 (1) RRUS-11 1900 MHZ	RMV RMV RMV
GAMMA	192'	270°	C1	EPBQ-652L8H8	–	RMV	(1) RRUS 32 B30 (1) RRUS-11 1900 MHZ	REL RMV
			C2	–	–	–	–	–
			C3	EPBQ-652L8H8	–	RMV	(1) RRUS 32 B2 (1) RRUS 12 W/ RRUS A2 (1) RRUS-11 1900 MHZ	RMV RMV RMV

NOTES

1. GC TO VERIFY THE FINAL RFDS MATCHES THE FINAL CONSTRUCTION DRAWINGS. GC TO NOTIFY ATC PM OF ANY DISCREPANCY PRIOR TO INSTALLING THE EQUIPMENT.
2. GC TO CAP ALL UNUSED PORTS.
3. CONFIRM SPACING OF PROPOSED EQUIP DOES NOT CAUSE TOWER CONFLICTS NOR IMPEDE TOWER CLIMBING PEGS.
4. THE ANTENNA ORIENTATION PLAN IS A SCHEMATIC. ATC DID NOT CONFIRM EXISTING SITE CONDITIONS INCLUDING, BUT NOT LIMITED TO, ANTENNA AZIMUTHS, MOUNT CONFIGURATIONS AND TOWER ORIENTATION. SCALES SHOWN ARE FOR REFERENCE ONLY AND EXISTING DIMENSIONS ARE APPROXIMATE. THE CONTRACTOR SHALL VERIFY ALL EXISTING CONDITIONS PRIOR TO INSTALLATION AND NOTIFY ATC OF ANY DISCREPANCIES.
5. CONTRACTOR TO ENSURE PROPER SEPARATION IN ACCORDANCE WITH AT&T'S FIRSTNET REQUIREMENTS.

STATUS ABBREVIATIONS

RMV: TO BE REMOVED
RMN: TO REMAIN
REL: TO BE RELOCATED
ADD: TO BE ADDED

CABLE LENGTHS FOR JUMPERS

JUNCTION BOX TO RRU: 15'
RRU TO ANTENNA: 10'

FINAL ANTENNA SCHEDULE

LOCATION			ANTENNA SUMMARY				NON ANTENNA SUMMARY	
SECTOR	RAD	AZ	POS	ANTENNA	BAND	STATUS	ADDITIONAL TOWER MOUNTED EQUIPMENT	STATUS
ALPHA	192'	30°	A1	840370799	LTE 700/LTE WCS	ADD	*(1) RRUS 32 B30* (1) RADIO 4490 B5/B12A	*RMN* ADD
			A2	AIR6472 B77G B77M	5G CBAND/5G DOD	ADD	-	-
			A3	840370799	LTE 700(FNET)/LTE AWS/5G AWS/LTE 1900/5G 1900	ADD	(1) RADIO 4890 B25/B66 (1) RADIO 4494 B14/B29	ADD ADD
BETA	192'	150°	B1	840370799	LTE 700/LTE WCS	ADD	*(1) RRUS 32 B30* (1) RADIO 4490 B5/B12A	*RMN* ADD
			B2	AIR6472 B77G B77M	5G CBAND/5G DOD	ADD	-	-
			B3	840370799	LTE 700(FNET)/LTE AWS/5G AWS/LTE 1900/5G 1900	ADD	(1) RADIO 4890 B25/B66 (1) RADIO 4494 B14/B29	ADD ADD
GAMMA	192'	270°	C1	840370799	LTE 700/LTE WCS	ADD	*(1) RRUS 32 B30* (1) RADIO 4490 B5/B12A	*RMN* ADD
			C2	AIR6472 B77G B77M	5G CBAND/5G DOD	ADD	-	-
			C3	840370799	LTE 700(FNET)/LTE AWS/5G AWS/LTE 1900/5G 1900	ADD	(1) RADIO 4890 B25/B66 (1) RADIO 4494 B14/B29	ADD ADD

EXISTING FIBER DISTRIBUTION/SQUID		EXISTING CABLING SUMMARY			
MODEL NUMBER	STATUS	CONDUIT	DC / RET	FIBER	STATUS
(3) DC6-48-60-18-8C-EV	REL	*(2) 2" CONDUIT*	*(4) 0.78" 8 AWG 6*	*(2) 0.39"*	*RMN*
–	–	–	*(1) 0.92 6 AWG 6*	–	*RMN*
–	–	–	*(1) 3/8" RET*	–	*RMN*

1 EQUIPMENT SCHEDULES

EXISTING FIBER DISTRIBUTION/SQUID		EXISTING CABLING SUMMARY			
MODEL NUMBER	STATUS	CONDUIT	DC / RET	FIBER	STATUS
(3) DC6-48-60-18-8C-EV	*RMN*	*(2) 2" CONDUIT*	*(4) 0.78" 8 AWG 6*	*(2) 0.39"*	*RMN*
-	-	-	*(1) 0.92 6 AWG 6*	-	*RMN*
-	-	-	*(1) 3/8" RET*	-	*RMN*

AMERICAN TOWER®

PLANS PREPARED BY:

TEP

TEP ENGINEERING, PLLC
326 TRYON ROAD
RALEIGH, NC 27603-3530
OFFICE: (919) 661-6351
www.tepgroup.net
N.C. LICENSE #P-1403

TEP IS A FAMILY OF COMPANIES LICENSED TO PROVIDE DIFFERENT SERVICES IN DIFFERENT JURISDICTIONS. DEPENDING ON THE JURISDICTION, PROFESSIONAL ENGINEERING AND LAND SURVEYING SERVICES ARE PROVIDED BY TEP OPCO LLC, A DELAWARE LIMITED LIABILITY COMPANY, TEP ENGINEERING, LLC, A NORTH CAROLINA PROFESSIONAL LIMITED LIABILITY COMPANY, OR M&H ENGINEERING, LLC, A NEW YORK PROFESSIONAL LIMITED LIABILITY COMPANY. GENERAL CONTRACTOR SERVICES ARE PROVIDED BY TEP OPCO LLC, A DELAWARE LIMITED LIABILITY COMPANY. WE ACQUIRE THE REQUISITE LICENSES IN EACH STATE. ADDITIONAL INFORMATION CAN BE OBTAINED FROM THE COMPANY.

REV.	DESCRIPTION	BY	DATE
A	PRELIMINARY	APM	03/12/25
0	100% CONSTRUCTION	APM	03/20/25
1	100% CONSTRUCTION	SSP	04/22/25

ATC SITE NUMBER: 280251

ATC SITE NAME: SPOUT SPRINGS NC

AT&T MOBILITY SITE NUMBER:

SINC001601

AT&T MOBILITY SITE NAME:

368-389

SITE ADDRESS:
641 NC HWY 24-87
CAMERON, NC 27332-6191

TEP Engineering, PLLC P-1403

NORTH CAROLINA PROFESSIONAL SEAL 048226 ENGINEER SCOTT C. BRANTLEY

SEAL: 04/22/25

AT&T

DATE DRAWN:	04/22/25
ATC JOB NO:	14884017
CUSTOMER NAME:	368-389
CUSTOMER ID:	SINC001601

ANTENNA SCHEDULE

SHEET NUMBER:	REVISION:
C-402	1

Copyright © 2025 ATC IP LLC, All Rights Reserved.

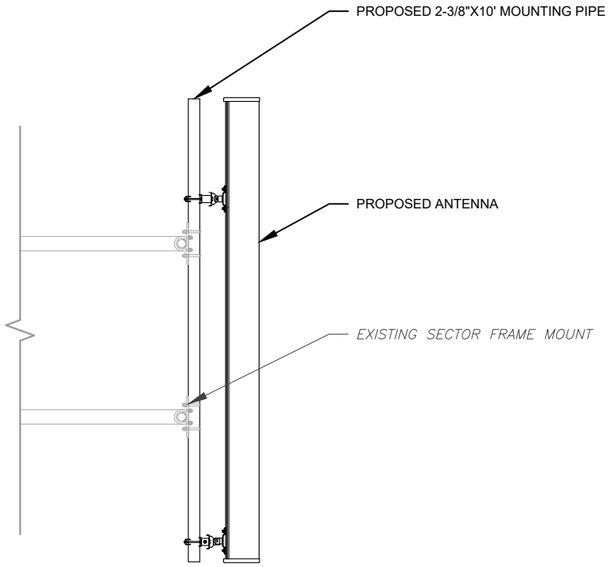

1 PROPOSED ANTENNA MOUNTING DETAIL

SCALE: N.T.S.

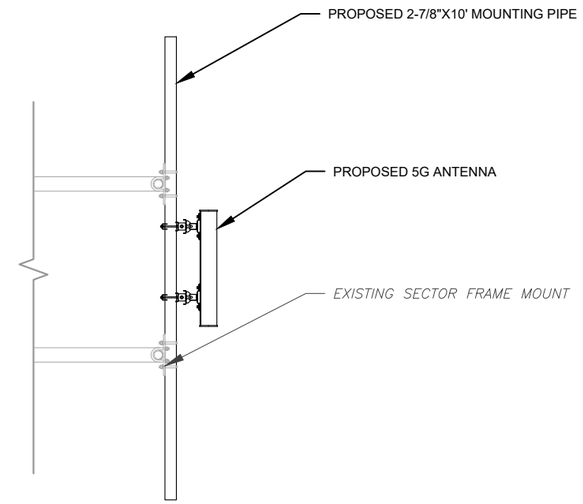

2 PROPOSED 5G ANTENNA MOUNTING DETAIL

SCALE: N.T.S.

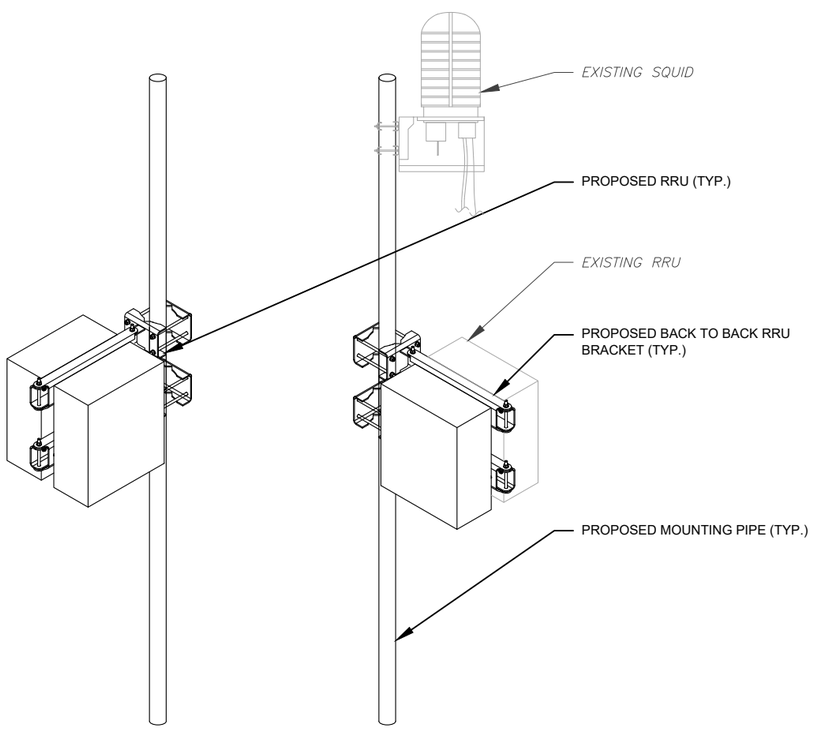

3 PROPOSED RRU & EXISTING SQUID MOUNTING DETAIL

SCALE: N.T.S.

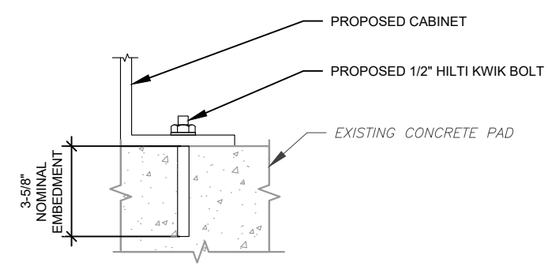

NOTE:

INSTALL HILTI KWIK BOLT ANCHORS STRICTLY PER INSTALLATION INSTRUCTIONS INCLUDED WITH PRODUCT OR FOUND ONLINE AT WWW.US.HILTI.COM. PROPER INSTALLATION IS CRITICAL FOR FULL PERFORMANCE.

4 CABINET ATTACHMENT DETAIL

SCALE: N.T.S.

AMERICAN TOWER®

PLANS PREPARED BY:

TEP

TEP ENGINEERING, PLLC
326 TRYON ROAD
RALEIGH, NC 27603-3530
OFFICE: (919) 661-6351
www.tepgroup.net
N.C. LICENSE #P-1403

TEP IS A FAMILY OF COMPANIES LICENSED TO PROVIDE DIFFERENT SERVICES IN DIFFERENT JURISDICTIONS. DEPENDING ON THE JURISDICTION, PROFESSIONAL ENGINEERING AND LAND SURVEYING SERVICES ARE PROVIDED BY TEP OPCO LLC, A DELAWARE LIMITED LIABILITY COMPANY, TEP ENGINEERING, LLC, A NORTH CAROLINA PROFESSIONAL LIMITED LIABILITY COMPANY, OR M&H ENGINEERING, LLC, A NEW YORK PROFESSIONAL LIMITED LIABILITY COMPANY. GENERAL CONTRACTOR SERVICES ARE PROVIDED BY TEP OPCO LLC, A DELAWARE LIMITED LIABILITY COMPANY. WE ACQUIRE THE REQUISITE LICENSES IN EACH STATE. ADDITIONAL INFORMATION CAN BE OBTAINED FROM THE COMPANY.

REV.	DESCRIPTION	BY	DATE
A	PRELIMINARY	APM	03/12/25
0	100% CONSTRUCTION	APM	03/20/25
1	100% CONSTRUCTION	SSP	04/22/25

ATC SITE NUMBER: 280251

ATC SITE NAME: SPOUT SPRINGS NC

AT&T MOBILITY SITE NUMBER:

SINC001601

AT&T MOBILITY SITE NAME:

368-389

SITE ADDRESS:
641 NC HWY 24-87
CAMERON, NC 27332-6191

TEP Engineering, PLLC P-1403

NORTH CAROLINA PROFESSIONAL SEAL 048226 ENGINEER SCOTT C. BRANTLEY

SEAL: 04/22/25

AT&T

DATE DRAWN:	04/22/25
ATC JOB NO:	14884017
CUSTOMER NAME:	368-389
CUSTOMER ID:	SINC001601

CONSTRUCTION DETAILS

SHEET NUMBER:	REVISION:
C-501	1

Copyright © 2025 ATC IP LLC, All Rights Reserved.

AC POWER PANEL A (EXISTING)
120/240 VOLTS, 1-PHASE, 3-WIRE, 200A

MAIN BREAKER RATING (A) : 200 SYSTEM VOLTAGE (V) : 240

DESCRIPTION	VA	c/nc	BKR	POSN	L1	L2	POSN	BKR	c/nc	VA	DESCRIPTION
CONTROLLER	520	nc	30/2	1	3030		2	50/2	c	2510	HVAC #1
	520	nc		3		3030	4		c	2510	
RECTIFIER #1	520	c	30/2	5	3030		6	50/2	c	2510	HVAC #2
	520	c		7		3030	8		c	2510	
RECTIFIER #2	520	c	30/2	9	1420		10	20/1	nc	900	INTERIOR LIGHTS
	520	c		11		820	12	20/1	nc	300	EXTERIOR LIGHTS
RECTIFIER #5 / OFF	0	c	30/2	13	720		14	20/1	nc	720	RECEPTACLES
	0	c		15		0	16				BLANK
RECTIFIER #4	520	c	30/2	17	520		18				BLANK
	520	c		19		520	20				BLANK
RECTIFIER #3	520	c	30/2	21	520		22				BLANK
	520	c		23		520	24				BLANK
RECTIFIER #6 / OFF	0	c	30/2	25	0		26				BLANK
	0	c		27		0	28				BLANK
RECTIFIER #7 / OFF	0	c	30/2	29	0		30				BLANK
	0	c		31		0	32				BLANK
RECTIFIER #8 / OFF	0	c	30/2	33	0		34				BLANK
	0	c		35		0	36				BLANK
BLANK				37	0		38				BLANK
BLANK				39		0	40				BLANK
GFCI	720	nc	20/1	41	720		42				BLANK
PHASE TOTALS (VA):					9960	7920					
PHASE TOTALS (A):					83	66					
CURRENT PER PHASE W/ 125% Continuous Loads(A):					98	81	Amperes/phase cannot exceed main breaker rating				
PANEL TOTAL (VA):					17880		Legend: c = continuous, nc = non-continuous				
PANEL TOTAL W/ 125% Continuous Loads (VA):					21430						

1 EXISTING PANEL SCHEDULE

SCALE: N.T.S.

AC POWER PANEL A (PROPOSED)
120/240 VOLTS, 1-PHASE, 3-WIRE, 200A

MAIN BREAKER RATING (A) : 200 SYSTEM VOLTAGE (V) : 240

DESCRIPTION	VA	c/nc	BKR	POSN	L1	L2	POSN	BKR	c/nc	VA	DESCRIPTION
CONTROLLER	520	nc	30/2	1	3030		2	50/2	c	2510	HVAC #1
	520	nc		3		3030	4		c	2510	
VERTIV RECTIFIER 1 & 2	1245	c	30/2	5	3755		6	50/2	c	2510	HVAC #2
	1245	c		7		3755	8		c	2510	
VERTIV RECTIFIER 3 & 4	1245	c	30/2	9	2145		10	20/1	nc	900	INTERIOR LIGHTS
	1245	c		11		1545	12	20/1	nc	300	EXTERIOR LIGHTS
VERTIV RECTIFIER 5 & 6	1245	c	30/2	13	1965		14	20/1	nc	720	RECEPTACLES
	1245	c		15		1245	16				BLANK
VERTIV RECTIFIER 7 & 8	1245	c	30/2	17	1245		18				BLANK
	1245	c		19		1245	20				BLANK
VERTIV RECTIFIER 9 & 10	1245	c	30/2	21	1245		22				BLANK
	1245	c		23		1245	24				BLANK
SPARE / OFF	0	c	30/2	25	0		26				BLANK
	0	c		27		0	28				BLANK
SPARE / OFF	0	c	30/2	29	0		30				BLANK
	0	c		31		0	32				BLANK
SPARE / OFF	0	c	30/2	33	0		34				BLANK
	0	c		35		0	36				BLANK
BLANK				37	0		38				BLANK
BLANK				39		0	40				BLANK
GFCI	720	nc	20/1	41	720		42				BLANK
PHASE TOTALS (VA):					14105	12065					
PHASE TOTALS (A):					118	101					
CURRENT PER PHASE W/ 125% Continuous Loads(A):					141	124	Amperes/phase cannot exceed main breaker rating				
PANEL TOTAL (VA):					26170		Legend: c = continuous, nc = non-continuous				
PANEL TOTAL W/ 125% Continuous Loads (VA):					31793						

2 PROPOSED PANEL SCHEDULE

SCALE: N.T.S.

AMERICAN TOWER®

PLANS PREPARED BY:

TEP

TEP ENGINEERING, PLLC
326 TRYON ROAD
RALEIGH, NC 27603-3530
OFFICE: (919) 661-6351
www.tepgroup.net
N.C. LICENSE #P-1403

TEP IS A FAMILY OF COMPANIES LICENSED TO PROVIDE DIFFERENT SERVICES IN DIFFERENT JURISDICTIONS. DEPENDING ON THE JURISDICTION, PROFESSIONAL ENGINEERING AND LAND SURVEYING SERVICES ARE PROVIDED BY TEP OPCO LLC, A DELAWARE LIMITED LIABILITY COMPANY, TEP ENGINEERING, LLC, A NORTH CAROLINA PROFESSIONAL LIMITED LIABILITY COMPANY, OR M&H ENGINEERING, LLC, A NEW YORK PROFESSIONAL LIMITED LIABILITY COMPANY. GENERAL CONTRACTOR SERVICES ARE PROVIDED BY TEP OPCO LLC, A DELAWARE LIMITED LIABILITY COMPANY. WE ACQUIRE THE REQUISITE LICENSES IN EACH STATE. ADDITIONAL INFORMATION CAN BE OBTAINED FROM THE COMPANY.

REV.	DESCRIPTION	BY	DATE
A	PRELIMINARY	APM	03/12/25
0	100% CONSTRUCTION	APM	03/20/25
1	100% CONSTRUCTION	SSP	04/22/25

ATC SITE NUMBER: 280251

ATC SITE NAME: SPOUT SPRINGS NC

AT&T MOBILITY SITE NUMBER:

SINC001601

AT&T MOBILITY SITE NAME:

368-389

SITE ADDRESS:
641 NC HWY 24-87
CAMERON, NC 27332-6191

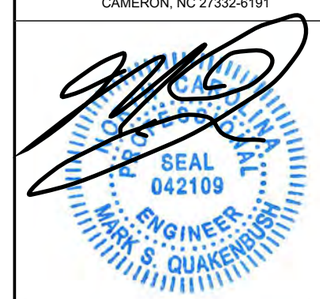

SEAL: 04/22/25

AT&T

DATE DRAWN:	04/22/25
ATC JOB NO:	14884017
CUSTOMER NAME:	368-389
CUSTOMER ID:	SINC001601

ELECTRICAL DETAILS

SHEET NUMBER: E-101

REVISION: 1

Copyright © 2025 ATC IP LLC, All Rights Reserved.

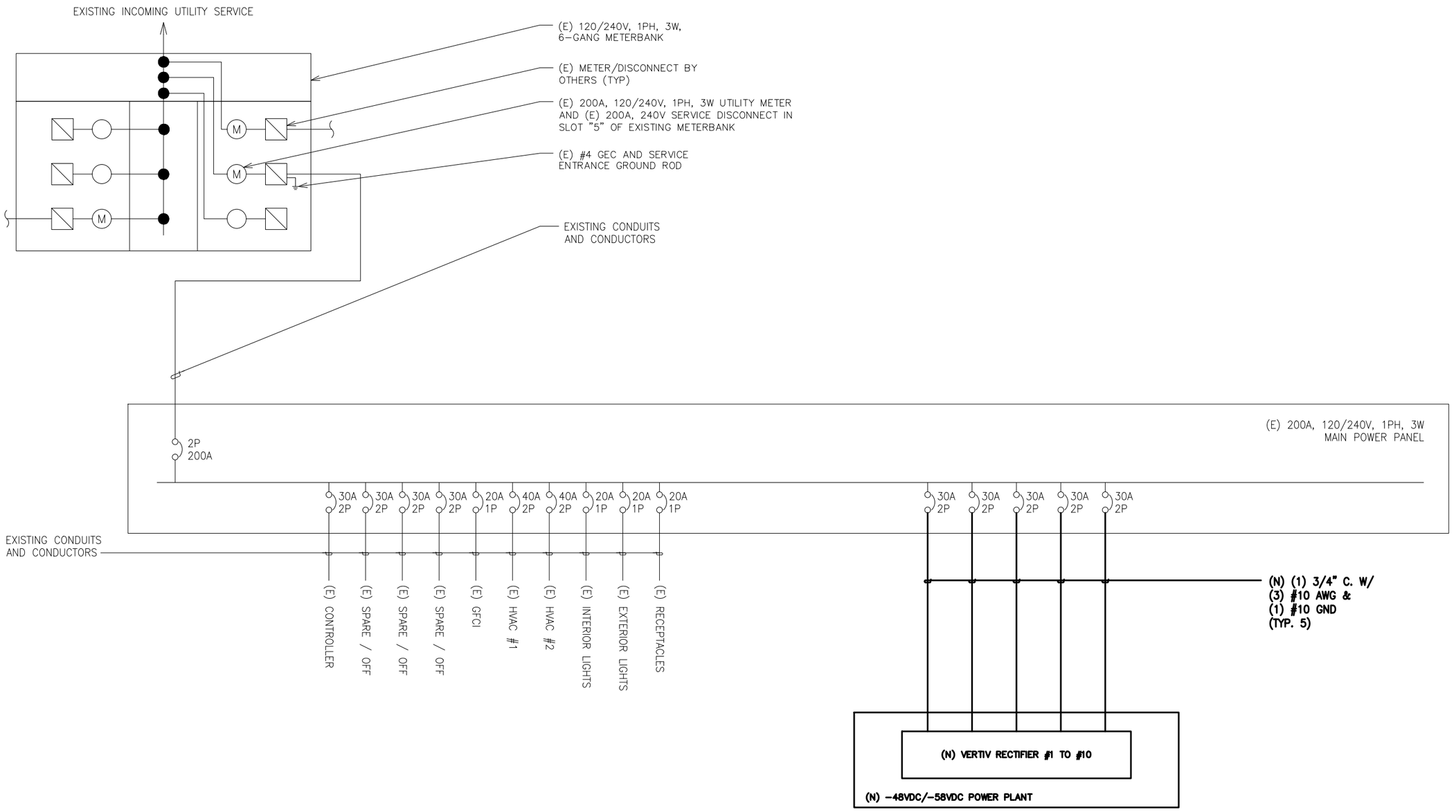

LEGEND:
(E) – EXISTING
(N) – NEW
(F) – FUTURE

1 ONE-LINE DIAGRAM
SCALE: N.T.S.

AMERICAN TOWER®

PLANS PREPARED BY:

TEP

TEP ENGINEERING, PLLC
326 TRYON ROAD
RALEIGH, NC 27603-3530
OFFICE: (919) 661-6351
www.tepgroup.net
N.C. LICENSE #P-1403

TEP IS A FAMILY OF COMPANIES LICENSED TO PROVIDE DIFFERENT SERVICES IN DIFFERENT JURISDICTIONS. DEPENDING ON THE JURISDICTION, PROFESSIONAL ENGINEERING AND LAND SURVEYING SERVICES ARE PROVIDED BY TEP OPCO LLC, A DELAWARE LIMITED LIABILITY COMPANY, TEP ENGINEERING, LLC, A NORTH CAROLINA PROFESSIONAL LIMITED LIABILITY COMPANY, OR M&H ENGINEERING, LLC, A NEW YORK PROFESSIONAL LIMITED LIABILITY COMPANY. GENERAL CONTRACTOR SERVICES ARE PROVIDED BY TEP OPCO LLC, A DELAWARE LIMITED LIABILITY COMPANY. WE ACQUIRE THE REQUISITE LICENSES IN EACH STATE. ADDITIONAL INFORMATION CAN BE OBTAINED FROM THE COMPANY.

REV.	DESCRIPTION	BY	DATE
A	PRELIMINARY	APM	03/12/25
0	100% CONSTRUCTION	APM	03/20/25
1	100% CONSTRUCTION	SSP	04/22/25

ATC SITE NUMBER: 280251

ATC SITE NAME: SPOUT SPRINGS NC

AT&T MOBILITY SITE NUMBER:

SINC001601

AT&T MOBILITY SITE NAME:

368-389

SITE ADDRESS:
641 NC HWY 24-87
CAMERON, NC 27332-6191

SEAL: 04/22/25

AT&T

DATE DRAWN:	04/22/25
ATC JOB NO:	14884017
CUSTOMER NAME:	368-389
CUSTOMER ID:	SINC001601

ELECTRICAL DETAILS

SHEET NUMBER:	REVISION:
E-102	1

Copyright © 2025 ATC IP LLC, All Rights Reserved

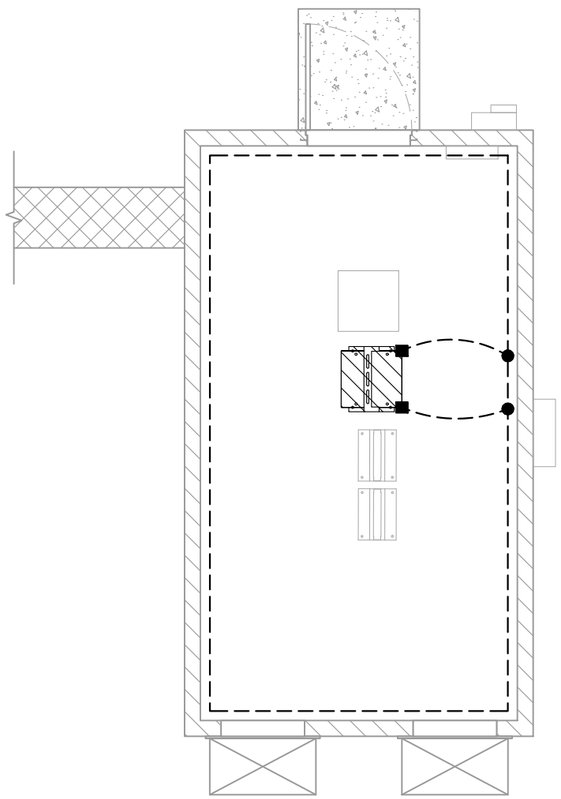

LEGEND	
■	EXOTHERMIC CONNECTION
●	MECHANICAL CONNECTION
▭	ANTENNA GROUND BAR
MGB	MASTER GROUND BAR

1 EQUIPMENT GROUNDING PLAN

SCALE: N.T.S.

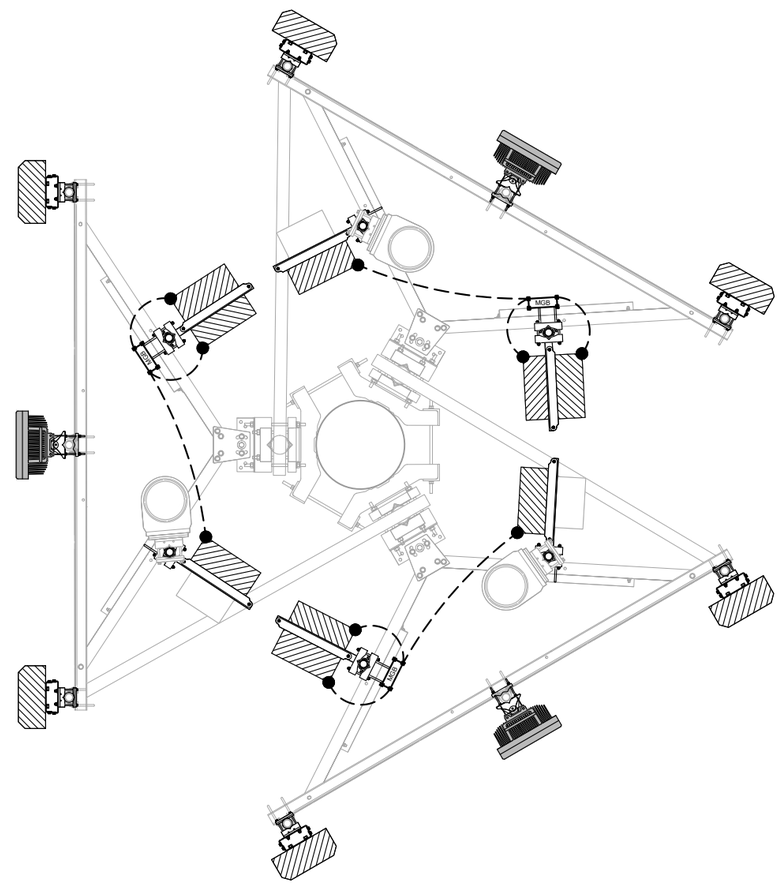

LEGEND	
■	EXOTHERMIC CONNECTION
●	MECHANICAL CONNECTION
▭	ANTENNA GROUND BAR
MGB	MASTER GROUND BAR

2 ANTENNA GROUNDING PLAN

SCALE: N.T.S.

AMERICAN TOWER®

PLANS PREPARED BY:

TEP

TEP ENGINEERING, PLLC
326 TRYON ROAD
RALEIGH, NC 27603-3530
OFFICE: (919) 661-6351
www.tepgroup.net
N.C. LICENSE #P-1403

TEP IS A FAMILY OF COMPANIES LICENSED TO PROVIDE DIFFERENT SERVICES IN DIFFERENT JURISDICTIONS. DEPENDING ON THE JURISDICTION, PROFESSIONAL ENGINEERING AND LAND SURVEYING SERVICES ARE PROVIDED BY TEP OPCO LLC, A DELAWARE LIMITED LIABILITY COMPANY, TEP ENGINEERING, LLC, A NORTH CAROLINA PROFESSIONAL LIMITED LIABILITY COMPANY, OR M&H ENGINEERING, LLC, A NEW YORK PROFESSIONAL LIMITED LIABILITY COMPANY. GENERAL CONTRACTOR SERVICES ARE PROVIDED BY TEP OPCO LLC, A DELAWARE LIMITED LIABILITY COMPANY. WE ACQUIRE THE REQUISITE LICENSES IN EACH STATE. ADDITIONAL INFORMATION CAN BE OBTAINED FROM THE COMPANY.

REV.	DESCRIPTION	BY	DATE
A	PRELIMINARY	APM	03/12/25
0	100% CONSTRUCTION	APM	03/20/25
1	100% CONSTRUCTION	SSP	04/22/25

ATC SITE NUMBER: 280251

ATC SITE NAME: SPOUT SPRINGS NC

AT&T MOBILITY SITE NUMBER:

SINC001601

AT&T MOBILITY SITE NAME:

368-389

SITE ADDRESS:
641 NC HWY 24-87
CAMERON, NC 27332-6191

SEAL: 04/22/25

AT&T

DATE DRAWN:	04/22/25
ATC JOB NO:	14884017
CUSTOMER NAME:	368-389
CUSTOMER ID:	SINC001601

GROUNDING PLAN

SHEET NUMBER:	REVISION:
E-103	1

Copyright © 2025 ATC IP LLC, All Rights Reserved.

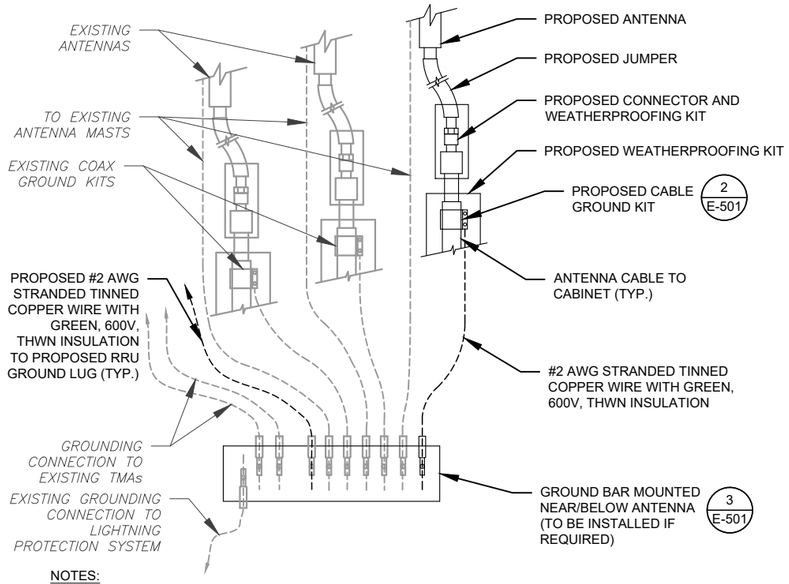

NOTES:

1. THIS DETAIL IS INTENDED TO SHOW THE GENERAL GROUNDING REQUIREMENTS. SLIGHT ADJUSTMENTS MAY BE REQUIRED BASED ON EXISTING SITE CONDITIONS. THE CONTRACTOR SHALL MAKE FIELD ADJUSTMENTS AS NEEDED AND INFORM THE CONSTRUCTION MANAGER OF ANY CONFLICTS.
2. SITE GROUNDING SHALL COMPLY WITH AT&T MOBILITY GROUNDING STANDARDS, LATEST EDITION, AND COMPLY WITH AT&T MOBILITY GROUNDING CHECKLIST, LATEST VERSION. WHEN NATIONAL AND LOCAL GROUNDING CODES ARE MORE STRINGENT THEY SHALL GOVERN.

1 TYPICAL ANTENNA GROUNDING DIAGRAM

SCALE: N.T.S.

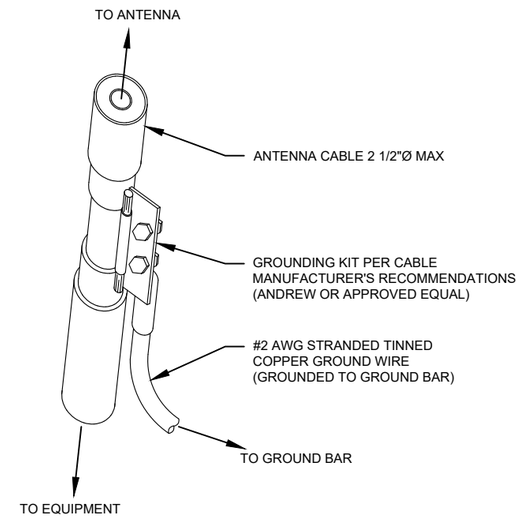

GROUND KIT NOTES:

1. DO NOT INSTALL CABLE GROUND KIT AT A BEND AND ALWAYS DIRECT GROUND WIRE DOWN TO GROUND BAR.
2. CONTRACTOR SHALL PROVIDE WEATHERPROOFING KIT (ANDREW PART NUMBER 221213) AND INSTALL/TAPE PER MANUFACTURER'S SPECIFICATIONS.

2 CABLE GROUND KIT CONNECTION DETAIL

SCALE: N.T.S.

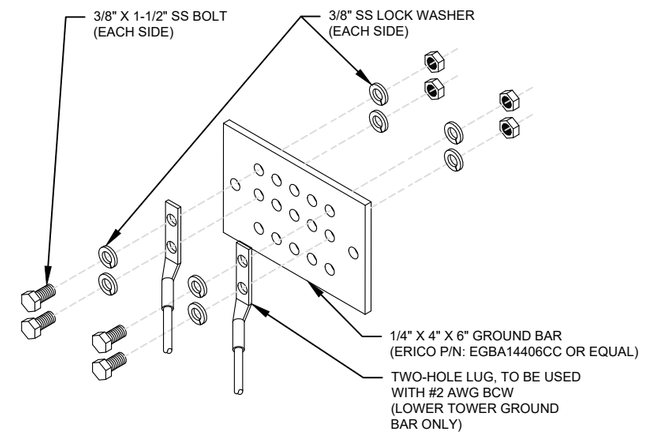

GROUND BAR NOTES:

1. GROUND BAR KITS COME WITH ALL HARDWARE, NUTS, BOLTS, WASHERS, ETC. EXCEPT THE STRUCTURAL MOUNTING MEMBER(S).
2. GROUND BAR TO BE BONDED DIRECTLY TO TOWER.

3 TOWER GROUND BAR DETAIL

SCALE: N.T.S.

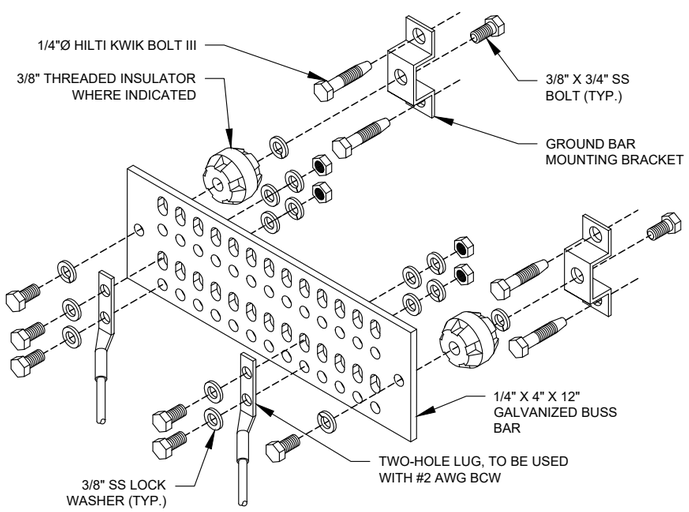

GROUND BAR NOTES

1. GROUND KITS COME WITH ALL HARDWARE, NUTS, BOLTS, WASHERS, ETC. EXCEPT THE STRUCTURAL MOUNTING MEMBER(S).
2. GROUND BAR SHALL BE BOLTED TO STRUCTURAL MEMBER OR ANCHORED TO CONCRETE SLAB W/ HILTI KWIK BOLT III.

4 MAIN GROUND BAR DETAIL

SCALE: N.T.S.

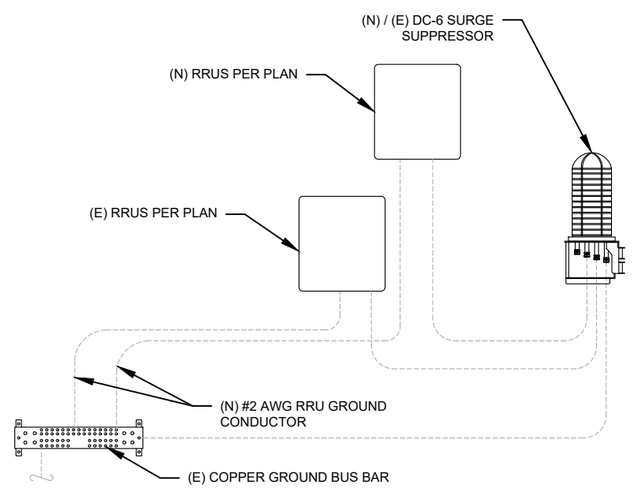

5 RRU GROUNDING

SCALE: N.T.S.

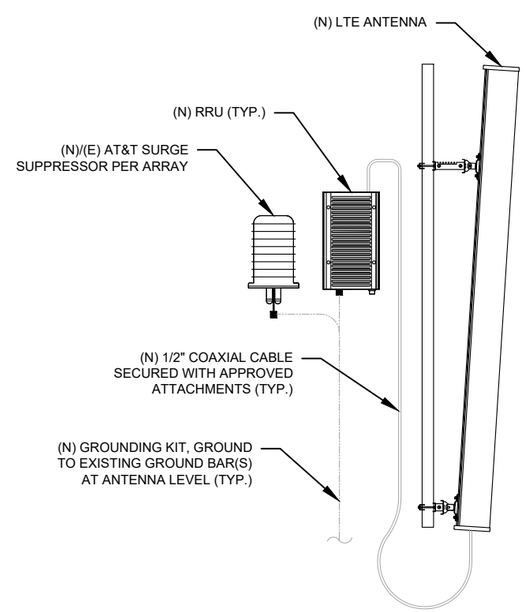

6 ANTENNA/RRU GROUNDING

SCALE: N.T.S.

AMERICAN TOWER®

PLANS PREPARED BY:

TEP

TEP ENGINEERING, PLLC
326 TRYON ROAD
RALEIGH, NC 27603-3530
OFFICE: (919) 661-6351
www.tepgroup.net
N.C. LICENSE #P-1403

TEP IS A FAMILY OF COMPANIES LICENSED TO PROVIDE DIFFERENT SERVICES IN DIFFERENT JURISDICTIONS. DEPENDING ON THE JURISDICTION, PROFESSIONAL ENGINEERING AND LAND SURVEYING SERVICES ARE PROVIDED BY TEP OPCO LLC, A DELAWARE LIMITED LIABILITY COMPANY, TEP ENGINEERING, LLC, A NORTH CAROLINA PROFESSIONAL LIMITED LIABILITY COMPANY, OR M&H ENGINEERING, LLC, A NEW YORK PROFESSIONAL LIMITED LIABILITY COMPANY. GENERAL CONTRACTOR SERVICES ARE PROVIDED BY TEP OPCO LLC, A DELAWARE LIMITED LIABILITY COMPANY. WE ACQUIRE THE REQUISITE LICENSES IN EACH STATE. ADDITIONAL INFORMATION CAN BE OBTAINED FROM THE COMPANY.

REV.	DESCRIPTION	BY	DATE
A	PRELIMINARY	APM	03/12/25
0	100% CONSTRUCTION	APM	03/20/25
1	100% CONSTRUCTION	SSP	04/22/25

ATC SITE NUMBER: 280251

ATC SITE NAME: SPOUT SPRINGS NC

AT&T MOBILITY SITE NUMBER:

SINC001601

AT&T MOBILITY SITE NAME:

368-389

SITE ADDRESS:
641 NC HWY 24-87
CAMERON, NC 27332-6191

SEAL: 04/22/25

AT&T

DATE DRAWN:	04/22/25
ATC JOB NO:	14884017
CUSTOMER NAME:	368-389
CUSTOMER ID:	SINC001601

GROUNDING DETAILS

SHEET NUMBER:	REVISION:
E-501	1

Copyright © 2025 ATC IP LLC, All Rights Reserved.

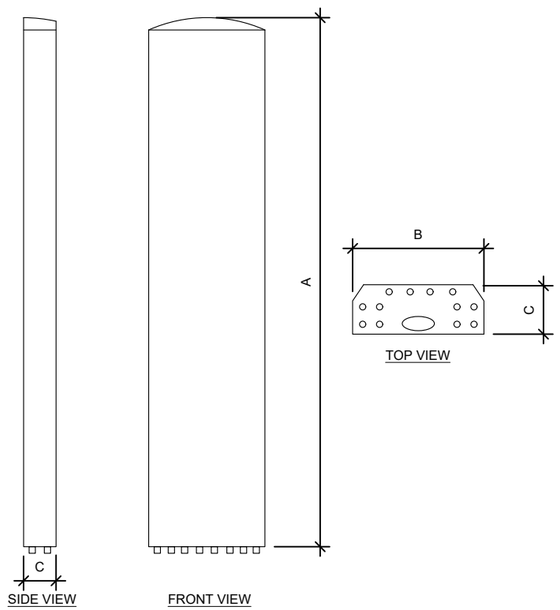

ANTENNA SPECIFICATIONS				
ANTENNA MODEL	A	B	C	WEIGHT (LBS)
840370799	96.0"	14.9"	6.5"	105.8
AIR 6472 B77G B77M	36.3"	15.8"	7.4"	67.2

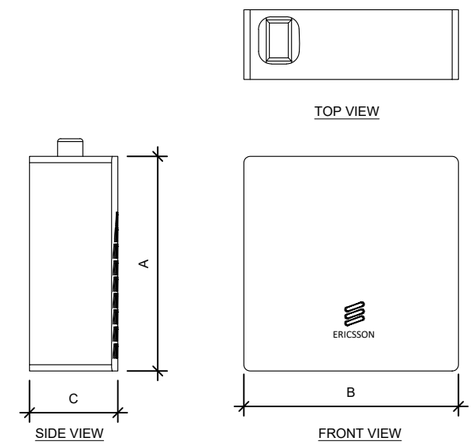

RRU SPECIFICATIONS				
RRU MODEL	A	B	C	WEIGHT (LBS)
RADIO 4490 B5/B12A	20.6"	15.6"	7.0"	65.0
RADIO 4890 B25/B66	17.5"	15.2"	6.9"	68.0
RADIO 4494 B14/B29	17.5"	15.1"	5.6"	57.3

1 EQUIPMENT SPECIFICATIONS

SCALE: N.T.S.

SUPPLEMENTAL

SHEET NUMBER: R-601

REVISION: -

Copyright © 2025 ATC IP LLC, All Rights Reserved

Vertiv™ NetSure™ 7100 Series

-48V DC Power System – 20 kW to 600 kW

VERTIV.

Key Benefits

- Effectively power a variety of equipment types with -48VDC rectifiers, -58VDC or +24VDC converters and 120VAC inverters, all from one power system.
- Actively manage and monitor system performance, battery health, and generator operation using the NetSure controller platform across your entire network.
- Minimize upfront cost by incrementally increasing capacity as needed.
- Easily migrate from -48V to -58V or +24V DC equipment or vice-versa with multi-purpose rectifier/converter slots and field adjustable split bus dual voltage breaker panels.
- Lower energy consumption and reduce cost of ownership with high-efficiency eSure rectifiers and converters.
- Securely manage your site power with optional HTTPS and SNMPv3 encryption, as well as RADIUS User Authentication.
- Easily monitor and adjust system parameters with a simple, graphic user interface accessed through an on-board color display or web pages supported by all major browsers.

Versatile DC power solution with high efficiency eSure™ rectifiers, converters and inverters, modular distribution, and advanced control and monitoring accepts single or three-phase input up to 277/480 VAC.

Description

Vertiv™ NetSure™ 7100 Series DC power systems with high efficiency eSure™ rectifiers, converters and inverters, modular distribution, and advanced control and monitoring are designed to accept single or three-phase input up to 277/480 VAC for a wide range of access, edge and core network applications. Available with 3500 or 2000 watt rectifiers, 2000 watt peak -48V to -58V DC to DC converters or 1500 watt -48V to +24V DC to DC converters, 1000 watt inverters, and a NetSure controller, these systems deliver up to 12,000 amps of current at -48V, up to 520 amps at -58V DC or +24V DC and up to 12kVA at 120VAC. Modular distribution panels, mounting shelves for rectifiers, converters and inverters, batteries and battery trays can be housed in an indoor enclosure or relay rack.

Each shelf can accommodate up to six plug'n'play rectifiers, which are controlled by the NCU. Additional shelves can be added as load requirements increase. The rectifiers, DC to DC converters and inverters are housed in shelves that occupy 1 RU. Each shelf accommodates rectifiers in all six positions and converters in three positions. Inverters are housed in separate shelves that accommodate six inverters each.

The NetSure 7100 can be expanded to up to six distribution bays for a total capacity of 12,000 amps and up to 24 distribution panels. Each NetSure 7100 distribution cabinet is modular by row and position.

NetSure™ 7100

Four distinct distribution cabinet sizes are available to accommodate from one to four distribution panels. This allows the system to be configured in relay racks of various heights for installation in low-profile sites or atop batteries or other equipment to make more effective use of floor space. Several distribution panels are available offering different combinations of distribution positions, low voltage disconnect and battery disconnect options.

Distribution device options include 1 amp to 300 amp bullet-style circuit breakers, 3 amp to 125 amp TPS-style fuses in plug-in bullet-style holders, 100 amp to 800 amp GJ/218-style circuit breakers, and 70 amp to 600 amp TPH-style fuses. These devices can be configured for both -48V load and battery disconnect and -58V or +24V load (bullet devices only). A GMT fuse module is also available.

The 120VAC inverter option is available at 6kVA (2RU total) or 12kVA (4RU total). Output is provided as either bulk via 70 amp breakers or NEMA receptacles at 15 amps each.

High-Efficiency eSure™ Rectifiers & Inverter R48-3500e3 (left), I120-1000 (center) & R48-2000e3 (right)

Application

The NetSure 7100 system is ideal for wireless, and wireline applications, including cell sites, MTSOs, small COs, datacenters, co-locations, huts, vaults and enclosures.

Vertiv™ NetSure™ 7100 Series

VERTIV.

Technical Specifications (System)

System Features	
System Voltage, Nominal	-48 VDC (-42.0 VDC to -58.0 VDC range)
Output Voltage, Secondary	-58 VDC (-56.0 VDC to -58.0 VDC range) or +24 VDC (+24.0 VDC to +28.0 VDC range)
Output Voltage, Inverter	120VAC nominal
Input Voltage	Single Phase: 208/240/277 VAC (277 VAC for 3500 W rectifiers only) Three Phase: 208 VAC or 277/480 VAC (277/480 VAC for 3500 W rectifiers only)
Control	Microprocessor (NCU)

Rated Output Capacity	
Bay - Rectifier, Converter, Inverter	2500 amps (-48VDC), 520 amps (-58VDC or +24VDC), 6kVA or 12kVA (120VAC)
Bay, Distribution	2000 amps (48 VDC) and 520 amps (-58 VDC or +24 VDC), 6kVA or 12kVA (120VAC)
Rectifier	3500 W (R48-3500e3 or R48-3500) or 2000 W (R48-2000e3)
Shelf	438 amps (3500W rectifiers) or 250 amps (2000W rectifiers)
Distribution Panel	600 amps

Physical Characteristics	
Framework Type	Rail-mount (can be mounted in an enclosure or relay rack)
Mounting Width	23 inches
Mounting Depth	20 inches, 9 inch front projection
Access	Front access for installation, operation and maintenance

Environmental	
Operating Temperature	-40 °F to 104 °F (-40 °C to 40 °C) continuous operation
Storage	-40 °F to 185 °F (-40 °C to 85 °C)
Humidity	0% to 95% relative humidity, non-condensing
Ventilation	Rectifiers and converters are fan-cooled front to rear
EMI/RFI Suppression	Conforms to FCC rules Part 15, Subpart B, Class B and EN55022 Class B, radiated and conducted
Safety Compliance	UL Listed 1801, cUL, NEBS Level 3

Ordering Information

Part Number	Description
582127000	NetSure™ 7100 DC power system
1M830DNA	NCU controller
1R483500E3	3500 W eSure rectifier, 1RU height
1R483500E	3500 W eSure™ rectifier, 3RU height
588705400	Power shelf for 1 RU 3500 W rectifiers
1R482000E3	2000 W eSure rectifier, 1RU height
1C48582000P3	2000 W peak, 1600 W average -48 VDC to -58 VDC converter
1C48241500	1500 W -48 VDC to +24 VDC converter
588705300	Power shelf for 1 RU (2000 W) rectifiers and converters
1I1201000	1000VA Inverter, 1RU height

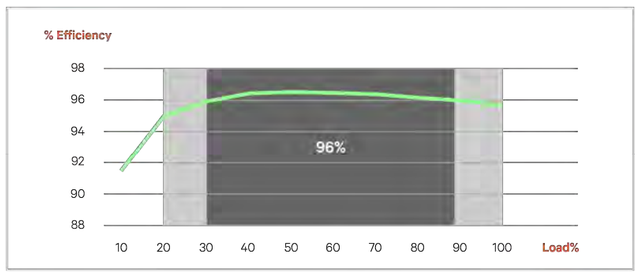

R48-3500e3 Efficiency Curve at 230 VAC Nominal

System Elements

-48 VDC NetSure™ 7100

1. AC Connection Panel (both sides)
2. DC Distribution Cabinet
3. NetSure Control Unit
4. Rectifiers/Converters
5. Relay Rack or Enclosure
6. Inverters

Vertiv.com | **Vertiv Headquarters,** 505 N Cleveland Ave, Westerville, OH 43082, USA

© 2024 Vertiv Group Corp. All rights reserved. Vertiv™ and the Vertiv logo are trademarks or registered trademarks of Vertiv Group Corp. All other names and logos referred to are trade names, trademarks or registered trademarks of their respective owners. While every precaution has been taken to ensure accuracy and completeness here, Vertiv Group Corp. assumes no responsibility, and disclaims all liability, for damages resulting from use of this information or for any errors or omissions. Specifications, rebates and other promotional offers are subject to change at Vertiv's sole discretion upon notice.

DC-00169 Rev.1-03/24

1 PROPOSED VERTIV 7100 POWER PLANT DETAIL

SCALE : N.T.S.

NOTE: THIS SHEET WAS CREATED BY OTHERS AND PROVIDED AT THE REQUEST OF THE CUSTOMER WITHOUT EDIT.

SUPPLEMENTAL

SHEET NUMBER:	REVISION:
R-602	-

Copyright © 2025 ATC IP LLC, All Rights Reserved

eSure™ Rectifier

R48-2000e3

VERTIV.

Benefits

- Optimize the amount of energy delivered and reduce power consumption with over 96% efficiency.
- Increase space for revenue generating equipment with modules that pack more power in a small space with high power density.
- Facilitate easy maintenance, expansion and system changes with hot swappable capabilities.
- Enjoy increased reliability and active load sharing with Digital Signal Processing (DSP) which translates into fewer components and optimized operation.
- Appreciate the flexibility to utilize in a variety of applications with a wide input voltage range of 85 VAC to 300 VAC and full power output at temperatures from -40˚C to +65˚C.

In addition to reducing power consumption and lowering operating cost, eSure™ high-efficiency rectifiers offer superior performance and uncompromised reliability.

Description

The 2000 watt high-efficiency eSure rectifier (model R48-2000e3) converts standard AC supply voltages into stable nominal -48 VDC voltage that is adjustable to application needs. This constant power rectifier designed with the latest patented switch-mode technology, uses DSP (Digital Signal Processing) for efficient operation.

The R48-2000e3 can be connected in parallel with other rectifiers and converters to support a variety of telecom applications. Unified remote management and control of the power system is enabled when combined with a Vertiv™ controller.

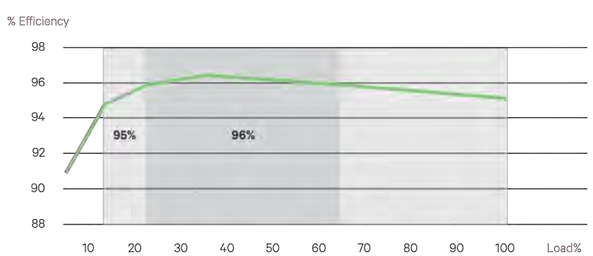

R48-2000e3 Efficiency Curve at 250 VAC Nominal

eSure™ Rectifier

VERTIV.

Technical Specifications

AC Input	R48-2000E3
Voltage	85 VAC to 300 VAC (see figure 1), 187 VAC to 264 VAC (nominal)
Frequency	45 Hz to 65 Hz
Maximum Current	12 A
Power Factor	>0.99 from 50 to 100% load
Protection	High and low voltage protection, surge and lightning protection Adapts to poor quality grid (voltage dip, weak mains) Disconnection at 415 VAC Mains fuses in both lines
DC Output	
Voltage	-42 VDC to -58 VDC
Maximum Power	2000 W
Maximum Current	42 A @ -48 VDC, limit set point 0 to 42 A (see figure 2)
Peak Efficiency	96.2%
Protection	Fuse for reverse connection and back feeding protection High voltage shutdown High temperature protection
Control and Monitoring	
Converter Alarm and Signaling	Alarm and status reported via CAN bus to system controller
Visual Indications	Green LED: Normal Operation Yellow LED: Alarm Red LED: Failure
Environmental	
Operating	-40°C to 80°C / -40°F to +176°F (see figure 3 for derating)
Temperature Derating	Full output power up to +65°C at input voltage range 200 to 250 VAC (see figure 3)
Storage	-40°C to +70°C / -40°F to +158°F
Relative Humidity	0 to 95%
Altitude	Full output power up to +65°C at input voltage range @200~ 250 VAC
Standards Compliance	
Safety	60950-1 (EN, IEC and UL)
EMC	EN55022, CISPR22, ETSI EN300 286: 2005, FCC CFR 47 Part 15, Telcordia GR-1089-CORE issue 6 (Class B conducted and radiated)
Environment	REACH, RoHS, WEEE
Mechanics	
Dimensions (H x W x D)	41 x 84.5 x 252.5 (mm) / 1.61 x 3.33 x 9.94 (inches)
Weight	1.13 kg / 2.49 lbs

Ordering Information

Model Number	Description
1R482000E3	eSure™ rectifier, -48 VDC, 2000 W

Figures

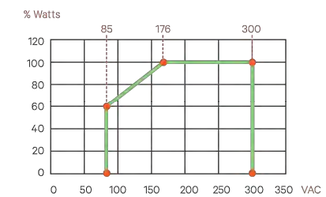

Figure 1: *Output Power vs. Input Voltage and Vo > 48 V at Tamb <55°C*

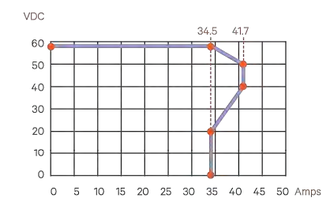

Figure 2: *Output Voltage vs. Output Current at Maximum Output Power 2000 W*

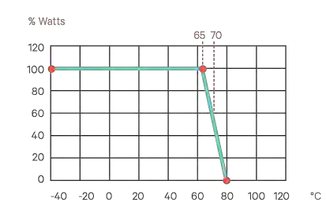

Figure 3: *Output Power vs. Temperature at Uin > 200VAC*

Vertiv.com | **Vertiv Headquarters,** 1050 Dearborn Drive, Columbus, OH, 43085, USA

© 2020 Vertiv Group Corp. All rights reserved. Vertiv™ and the Vertiv logo are trademarks or registered trademarks of Vertiv Group Corp. All other names and logos referred to are trade names, trademarks or registered trademarks of their respective owners. While every precaution has been taken to ensure accuracy and completeness here, Vertiv Group Corp. assumes no responsibility, and disclaims all liability, for damages resulting from use of this information or for any errors or omissions. Specifications, rebates and other promotional offers are subject to change at Vertiv's sole discretion upon notice.

R48-2000E3 (R06/20)

1 PROPOSED -48V RECTIFIER DETAIL

SCALE : N.T.S.

NOTE: THIS SHEET WAS CREATED BY OTHERS AND PROVIDED AT THE REQUEST OF THE CUSTOMER WITHOUT EDIT.

SUPPLEMENTAL

SHEET NUMBER:	REVISION:
R-603	-

Copyright © 2025 ATC IP LLC, All Rights Reserved

Vertiv™ eSure™ Converter

C48/58 -2000P3

VERTIV.

Key Benefits

Converter, 48 to 58 VDC, 2000 W Peak / 1600 W Average

- Reduce power consumption and lower operating costs with 95% peak efficiency.
- Easily add capacity with hot pluggable interchangeable components.
- Ensure high availability with wide input voltage range from 41 VDC to 58 VDC.
- Power your 5G sites in the harsh environments with operation from -40°C to +65°C.
- Enjoy peace of mind with high quality UL recognized design.

Easily support higher power 5G remote radios on cell towers with modular 2000 watt eSure™ power extend converters.

Description

The Vertiv™ eSure™ C48/58-2000P3 high-efficiency converter is designed to operate from a nominal -48 VDC source to provide nominal -58 VDC load power, which is adjustable to application needs up to 2000 watts peak, 1600 watts average. This constant power converter designed with the latest patented switchmode technology, uses digital signal processing (DSP) for efficient operation.

The eSure C48/58-2000P3 DC to DC converter is ideal for feeding high power remote radio heads (RRHs). 58 VDC is regulated over a wide input range to minimize voltage drop in the cable feeding the RRH and sustain operation to end of battery discharge. When redundancy is critical or loads are high, multiple eSure C48/58-2000P3 converters can be connected in parallel to support a variety of telecom applications. Unified remote management and control of the power system is enabled when combined with a Vertiv™ NetSure™ controller.

% Efficiency

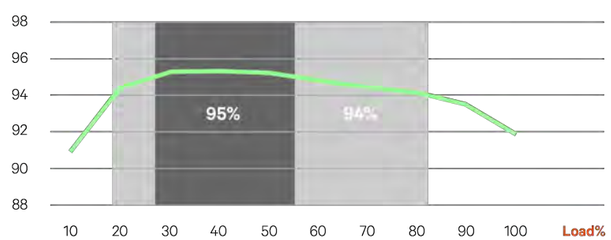

C48/58-2000P3 Efficiency Curve at 53.5 VDC Nominal Input

Vertiv™ eSure™ Converter

VERTIV.

Technical Specifications

DC Input	C48/58-2000P3
Voltage	41 VDC to 58.5 VDC, 48 VDC (nominal)
Maximum Current	53 A

DC Output	
Voltage	56 VDC to 58 VDC
Maximum Power	2000 W peak, 1600 W average at 40°C, 1280 W average at 65°C
Maximum Current	35.7 A at 2000 W peak (*see figure 1*), 28.6 A at 1600 W average, 22.9 A at 1280 W average, all at 56 VDC
Peak Efficiency	>95%
Noise	< 250mV pk-pk; < 20mV rms; <38 dBrnC

Control and Monitoring	
Alarms and Signaling	Alarm and status reported via CAN bus to system controller
Visual Indications	Green LED: Normal Operation Yellow LED: Alarm Red LED: Failure Flashing Red LED: Fan Failure

Environmental	
Operating Temperature	-40°C to +80°C / -40°F to +176°F (*see figure 2*)
Storage Temperature	-40°C to +85°C / -40°F to +185°F
Relative Humidity	0 to 90%
Altitude	2000 m / 6560 ft at full power

Standards Compliance	
Safety	UL62368-1, EN62368-1, IEC62368-1
EMC	FCC CFR 47 Part 15 Class A conducted and Class B radiated
Environment	REACH, RoHS

Mechanics	
Dimensions (H x W x D)	41 x 84.5 x 252.5 mm / 1.61 x 3.33 x 9.94 inches
Weight	1.13 kg / 2.49 lbs

Ordering Information

Part Number	Description
1C48582000P3	eSure™ converter, -48 to -58 VDC, 2000 W peak / 1600 W average

Figures

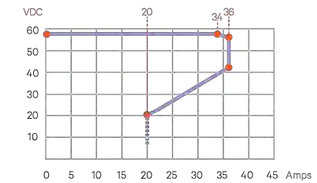

Figure 1: *Output Voltage vs. Output Current at Maximum peak Power 2000 W*

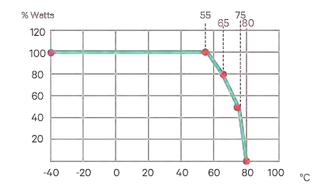

Figure 2: *Output Power vs. Temperature at -41VDC≥Vin ≥ -58VDC*

Vertiv.com | **Vertiv Headquarters,** 1050 Dearborn Drive, Columbus, OH, 43085, USA

© 2024 Vertiv Group Corp. All rights reserved. Vertiv™ and the Vertiv logo are trademarks or registered trademarks of Vertiv Group Corp. All other names and logos referred to are trade names, trademarks or registered trademarks of their respective owners. While every precaution has been taken to ensure accuracy and completeness here, Vertiv Group Corp. assumes no responsibility, and disclaims all liability, for damages resulting from use of this information or for any errors or omissions. Specifications, rebates and other promotional offers are subject to change at Vertiv's sole discretion upon notice.

C48/58-2000P3 (02/2024)

1 PROPOSED -48/-58V DC CONVERTER DETAIL

SCALE : N.T.S.

NOTE: THIS SHEET WAS CREATED BY OTHERS AND PROVIDED AT THE REQUEST OF THE CUSTOMER WITHOUT EDIT.

SUPPLEMENTAL

SHEET NUMBER:	REVISION:
R-604	-

Copyright © 2025 ATC IP LLC, All Rights Reserved.

Pxxx: Bulk Pipe

SITE PRO 1
A valmont COMPANY

Part #	Length	OD x Length (in)
Schedule 40		
P260	5'-0"	2-3/8" x 60"
P263	5'-3"	2-3/8" x 63"
P272	6'-0"	2-3/8" x 72"
P284	7'-0"	2-3/8" x 84"
P296	8'-0"	2-3/8" x 96"
P2108	9'-0"	2-3/8" x 108"
P2120	10'-0"	2-3/8" x 120"
P2126	10'-6"	2-3/8" x 126"
P2150	12'-6"	2-3/8" x 150"
P2174	14'-6"	2-3/8" x 174"
P2252	21'-0"	2-3/8" x 252"
P3072	6'-0"	2-7/8" x 72"
P3084	7'-0"	2-7/8" x 84"
P3096	8'-0"	2-7/8" x 96"
P30108	9'-0"	2-7/8" x 108"
P30120	10'-0"	2-7/8" x 120"
P30126	10'-6"	2-7/8" x 126"
P30150	12'-6"	2-7/8" x 150"
P30174	14'-6"	2-7/8" x 174"
P30252	21'-0"	2-7/8" x 252"
P360	5'-0"	3-1/2" x 60"
P372	6'-0"	3-1/2" x 72"
P384	7'-0"	3-1/2" x 84"
P396	8'-0"	3-1/2" x 96"
P3150	12'-6"	3-1/2" x 150"
P3160	13'-4"	3-1/2" x 160"
P3174	14'-6"	3-1/2" x 174"
P3216	18'-0"	3-1/2" x 216"
P3252	21'-0"	3-1/2" x 252"
P472	6'-0"	4-1/2" x 72"
P4126	10'-6"	4-1/2" x 126"
P4252	21'-0"	4-1/2" x 252"

Features:
- Factory cut end, hot-dip galvanized pipe

Construction:
- ASTM A53 Grade B
- Schedule 40 or Schedule 80

Design Criteria:
- ASTM A53 Grade B (Yield Fy = 35 ksi [240 MPa]/ Tensile Fu = 60 ksi [415 MPa])
- Hot dip galvanized in accordance with ASTM A123 requirements

Part #	Length	OD x Length (in)
Schedule 80		
P2252-80	21'	2-1/2" x 252"
P30126-80	10'-6"	2-7/8" x 126"
P30252-80	21'	2-7/8" x 252"
P3252-80	21'	3-1/2" x 252"

created on: 03/03/2023
©2023

SitePro1.com 888-438-7761

1 PROPOSED PIPE MOUNT DETAIL
SCALE: N.T.S.

Pxxx: Bulk Pipe

SITE PRO 1
A valmont COMPANY

Part #	Length	OD x Length (in)
Schedule 40		
P260	5'-0"	2-3/8" x 60"
P263	5'-3"	2-3/8" x 63"
P272	6'-0"	2-3/8" x 72"
P284	7'-0"	2-3/8" x 84"
P296	8'-0"	2-3/8" x 96"
P2108	9'-0"	2-3/8" x 108"
P2120	10'-0"	2-3/8" x 120"
P2126	10'-6"	2-3/8" x 126"
P2150	12'-6"	2-3/8" x 150"
P2174	14'-6"	2-3/8" x 174"
P2252	21'-0"	2-3/8" x 252"
P3072	6'-0"	2-7/8" x 72"
P3084	7'-0"	2-7/8" x 84"
P3096	8'-0"	2-7/8" x 96"
P30108	9'-0"	2-7/8" x 108"
P30120	10'-0"	2-7/8" x 120"
P30126	10'-6"	2-7/8" x 126"
P30150	12'-6"	2-7/8" x 150"
P30174	14'-6"	2-7/8" x 174"
P30252	21'-0"	2-7/8" x 252"
P360	5'-0"	3-1/2" x 60"
P372	6'-0"	3-1/2" x 72"
P384	7'-0"	3-1/2" x 84"
P396	8'-0"	3-1/2" x 96"
P3150	12'-6"	3-1/2" x 150"
P3160	13'-4"	3-1/2" x 160"
P3174	14'-6"	3-1/2" x 174"
P3216	18'-0"	3-1/2" x 216"
P3252	21'-0"	3-1/2" x 252"
P472	6'-0"	4-1/2" x 72"
P4126	10'-6"	4-1/2" x 126"
P4252	21'-0"	4-1/2" x 252"

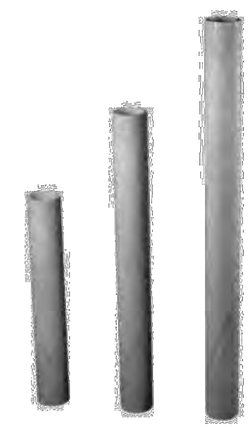

Features:
- Factory cut end, hot-dip galvanized pipe

Construction:
- ASTM A53 Grade B
- Schedule 40 or Schedule 80

Design Criteria:
- ASTM A53 Grade B (Yield Fy = 35 ksi [240 MPa]/ Tensile Fu = 60 ksi [415 MPa])
- Hot dip galvanized in accordance with ASTM A123 requirements

Part #	Length	OD x Length (in)
Schedule 80		
P2252-80	21'	2-1/2" x 252"
P30126-80	10'-6"	2-7/8" x 126"
P30252-80	21'	2-7/8" x 252"
P3252-80	21'	3-1/2" x 252"

created on: 03/03/2023
©2023

SitePro1.com 888-438-7761

2 PROPOSED PIPE MOUNT DETAIL
SCALE: N.T.S.

NOTE: THIS SHEET WAS CREATED BY OTHERS AND PROVIDED AT THE REQUEST OF THE CUSTOMER WITHOUT EDIT.

SUPPLEMENTAL

SHEET NUMBER:	REVISION:
R-605	1

Copyright © 2025 ATC IP LLC, All Rights Reserved

PARTS LIST						
ITEM	QTY	PART NO.	PART DESCRIPTION	LENGTH	UNIT WT.	NET WT.
1	2	X-HMBA-PL	1/4" x 8" FLAT STOCK (A36)	12 1/4 in	6.23	12.46
2	2	X-115765	5" V-CLAMP	7 1/16 in	1.03	2.05
3	4	X-LDA	LINDAPTER TYPE A SHORT TAIL		0.13	0.54
4	4	X-LDC	LINDAPTER TYPE C		0.55	2.20
5	8	G12065	1/2" x 6-1/2" HDG HEX BOLT GR5 FULL THREAD	6 1/2 in	0.41	3.28
6	4	G1202	1/2" x 2" HDG HEX BOLT GR5	2 in	0.18	0.70
7	8	G12FW	1/2" HDG USS FLATWASHER	3/32 in	0.03	0.27
8	12	G12LW	1/2" HDG LOCKWASHER	1/8 in	0.01	0.17
9	12	G12NUT	1/2" HDG HEAVY 2H HEX NUT		0.07	0.86
					TOTAL WT. #	22.53

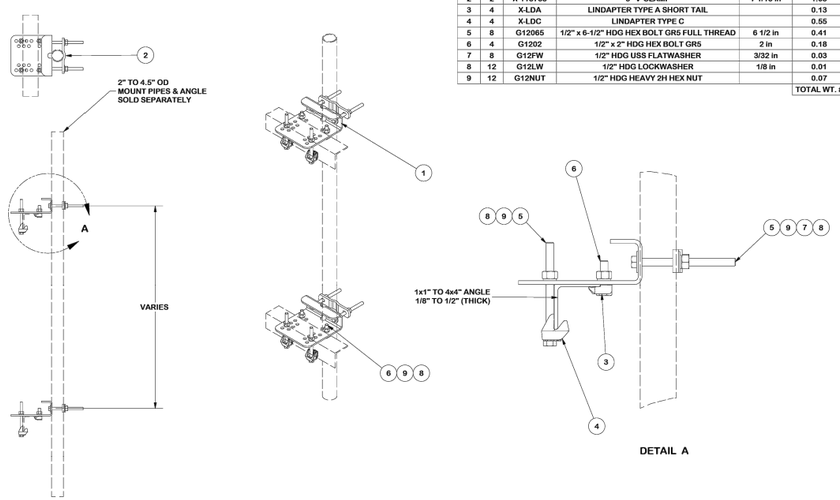

TOLERANCE NOTES

TOLERANCES ON DIMENSIONS, UNLESS OTHERWISE NOTED ARE:
SAWED, SHEARED AND GAS CUT EDGES *(± 0.030")*
DRILLED HOLES AND PUNCHED HOLES *(± 0.030")* - NO CONING OF HOLES
MILLED, PLANED AND MACHINED EDGES *(± 0.010")* - NO CONING OF HOLES
BENDS AND ANGLES ARE ± 1/2 DEGREE
ALL OTHER MACHINING *(± 0.005")*
ALL OTHER ASSEMBLY *(± 0.060")*

PATENT INFORMATION: WWW.SITEPRO1.COM/PATENTS

PROPRIETARY NOTE:
THE INFORMATION AND TECHNIQUES CONTAINED IN THIS DRAWING ARE PROPRIETARY INFORMATION OF VALMONT INDUSTRIES AND CONSIDERED A TRADE SECRET. ANY USE OR DISCLOSURE WITHOUT THE CONSENT OF VALMONT INDUSTRIES IS STRICTLY PROHIBITED.

DESCRIPTION: HANDRAIL MOUNT BRACKET UNIVERSAL ANGLE

SITE PRO 1 — A valmont COMPANY
Engineering Support Team: sp1engineering@valmont.com

CPD NO.	DRAWN BY	ENG. APPROVAL	PART NO.
	JET 11/30/2023	12/12/2023	HMB-AU
CLASS / SUB	DRAWING USAGE	CHECKED BY	DWG. NO.
87 / 02	CUSTOMER	JET 12/12/2023	HMB-AU

PAGE 1 OF 1

1 PROPOSED CROSSOVER PLATE KIT DETAIL
SCALE : N.T.S.

SITE PRO 1
A valmont COMPANY

U-bolts

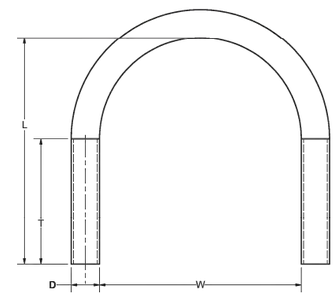

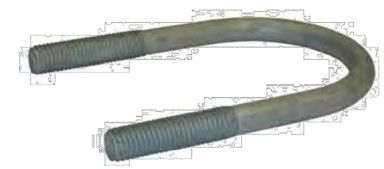

Features: Includes nuts, locks, and flat washers, long thread lengths. Hot-dip galvanized.

Construction: SAE J429 Gr. 2. Coarse threads.

Design Criteria: Conforms to the minimum requirements as stated in SAE J429 (Latest Revision) Grade 2 Stud, Rolled or Cut CNC threads. SAE J429 Grade 2 (Yield Fy = 57 ksi / Tensile Fu = 74 ksi). All finished goods are Hot Dip Galvanized in accordance with ASTM A123 requirements.

Part #	Diameter (D)	Width (W)	Length (L)	Thread (T)	Weight
UB3200	3/8″	2″	3″	1-1/4″	0.40 lb.
UB3212	3/8″	2-1/2″	3-5/8″	1-3/4″	0.45 lb.
UB3300	3/8″	3″	4-1/4″	2″	0.50 lb.
UB3312	3/8″	3-1/2″	4-3/4″	2″	0.50 lb.
UB3418	3/8″	4″	5-3/4″	2-1/2″	0.60 lb.
UB1400	1/2″	2″	4″	2″	0.65 lb.
UB1212	1/2″	2-1/2″	4-1/2″	2″	0.65 lb.
UB1300	1/2″	3″	5″	2″	0.70 lb.
UB1358	1/2″	3-5/8″	5-1/2″	3″	0.75 lb.
UB1306	1/2″	3-5/8″	6″	3″	0.80 lb.
UB1418	1/2″	4-1/8″	6″	3″	0.90 lb.
UB1458	1/2″	4-5/8″	7″	3″	0.90 lb.
UB5258	5/8″	2-5/8″	4-1/2″	2″	1.20 lb.
UB5358	5/8″	3-5/8″	6″	3″	1.45 lb.
UB5458	5/8″	4-5/8″	7″	3″	1.60 lb.

valmont
PiROD
MICROFLECT

New York, NY	Los Angeles, CA	Salem, OR
888-438-7761	888-776-1937	888-880-9191
Atlanta, GA	**Plymouth, IN**	**Dallas, TX**
866-901-0603	888-753-7446	888-809-5151

2 PROPOSED U-BOLT DETAIL
SCALE: N.T.S.

NOTE: THIS SHEET WAS CREATED BY OTHERS AND PROVIDED AT THE REQUEST OF THE CUSTOMER WITHOUT EDIT.

SUPPLEMENTAL

SHEET NUMBER:	REVISION:
R-606	-

Copyright © 2025 ATC IP LLC, All Rights Reserved

SITE PRO 1

U-bolts

A valmont COMPANY

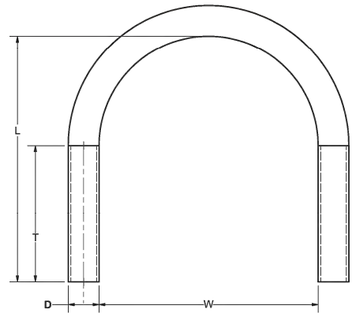

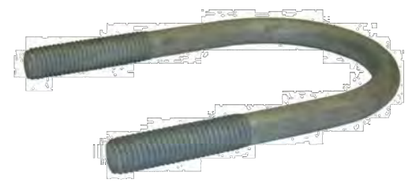

Features: Includes nuts, locks, and flat washers, long thread lengths. Hot-dip galvanized.

Construction: SAE J429 Gr. 2. Coarse threads.

Design Criteria: Conforms to the minimum requirements as stated in SAE J429 (Latest Revision) Grade 2 Stud, Rolled or Cut CNC threads. SAE J429 Grade 2 (Yield Fy = 57 ksi / Tensile Fu = 74 ksi). All finished goods are Hot Dip Galvanized in accordance with ASTM A123 requirements.

Part #	Diameter (D)	Width (W)	Length (L)	Thread (T)	Weight
UB3200	3/8″	2″	3″	1-1/4″	0.40 lb.
UB3212	3/8″	2-1/2″	3-5/8″	1-3/4″	0.45 lb.
UB3300	3/8″	3″	4-1/4″	2″	0.50 lb.
UB3312	3/8″	3-1/2″	4-3/4″	2″	0.50 lb.
UB3418	3/8″	4″	5-3/4″	2-1/2″	0.60 lb.
UB1400	1/2″	2″	4″	2″	0.65 lb.
UB1212	1/2″	2-1/2″	4-1/2″	2″	0.65 lb.
UB1300	1/2″	3″	5″	2″	0.70 lb.
UB1358	1/2″	3-5/8″	5-1/2″	3″	0.75 lb.
UB1306	1/2″	3-5/8″	6″	3″	0.80 lb.
UB1418	1/2″	4-1/8″	6″	3″	0.90 lb.
UB1458	1/2″	4-5/8″	7″	3″	0.90 lb.
UB5258	5/8″	2-5/8″	4-1/2″	2″	1.20 lb.
UB5358	5/8″	3-5/8″	6″	3″	1.45 lb.
UB5458	5/8″	4-5/8″	7″	3″	1.60 lb.

valmont
PiRod
MICROFLECT

New York, NY 888-438-7761
Los Angeles, CA 888-776-1937
Salem, OR 888-880-9191
Atlanta, GA 866-901-0603
Plymouth, IN 888-753-7446
Dallas, TX 888-809-5151

1 PROPOSED U-BOLT DETAIL
SCALE: N.T.S.

NOTE: THIS SHEET WAS CREATED BY OTHERS AND PROVIDED AT THE REQUEST OF THE CUSTOMER WITHOUT EDIT.

SUPPLEMENTAL

SHEET NUMBER: R-607

REVISION: -

Copyright © 2025 ATC IP LLC, All Rights Reserved

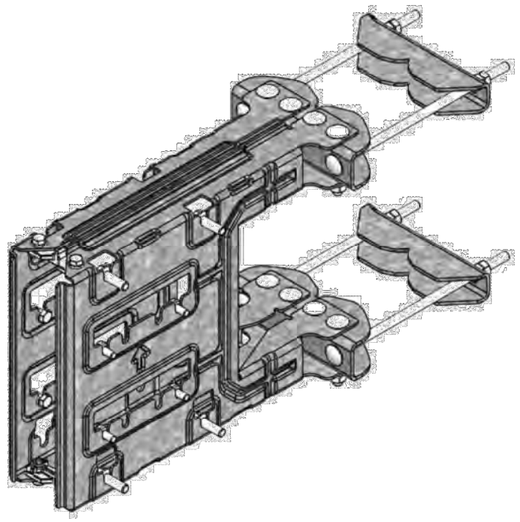

SXK 125 5394/2

Universal B2B Bracket CC110

Universal B2B Bracket CC110 is designed for installation of back to back ERS on any supporting structure i.e. pole, mast, tower leg etc. It is Low PIM bracket. When installed properly, it meets the requirements of installation in High Risk PIM Zones. Static and dynamic testing was conducted as per IEC 61000-4-3: 2020 PRV and ITU-R SM-329.

Robustness

The Universal B2B Bracket CC110 kit supports for installation of back to back ERS weight upto 50 kg on each side simultaneously. It supports the ERS mounting on pole, mast, tower leg or square tube. Easy installation due to use of carriage bolts for mounting on the supporting structure and key holes for ERS in the bracket. Bush separators has been provided to avoid any contact of arms with each other.

Quality

All components of the assembly are made of galvanized High Tensile Steel, which supports corrosion resistance.

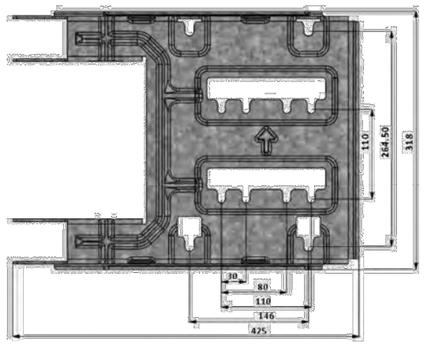

ericsson.com

Technical specification

Functional Description

SXK 125 5394/2

Universal B2B Bracket CC110 kit supports installation of ERS back to back with Centre to Centre distance of 30mm x 110mm, 80mm x 110mm and 110mm x 110mm. It also supports two RRUs (back to back) with Centre to Centre distance of 146mm x 264.5 mm (old generation ERS). ERS or RRU are mounted back to back in portrait position on any supporting structure with ERS or RRU weight up to 50kg on each side.

Product	Universal B2B Bracket CC110				
Product number	SXK 125 5394/2				
Mounting range	Profile	Minimum	Maximum		
	Circular tube	Ø25 mm (1 inch)	Ø120 mm (4.7 inch)		
	60º Angle	35 mm Opening (1.4 inch)	115 mm Opening (4.5 inch)		
	90º Angle	35 x 35 mm (1.4 X 1.4 inch)	112 x 112 mm (4.4 X 4.4 inch)		
	Square tube	35 x 35 mm (1.4 X 1.4 inch)	80 x 80 mm (3.1 X 3.1 inch)		
Mechanical specification	Brackets	High Tensile Steel, Galvanized			
	Fasteners	Grade 8.8 Galvanized & A4			
	Bush Separators	Composite material(PBT+PET)-GF30			
Recommended tools	M8 ISO, 13mm torque wrench (10-22 Nm)				
	M10 ISO, 16mm & 17mm torque wrench (15-25 Nm)				
Performance	Maximum wind speed	67 m/s (240 km/h, 149 mph)			
	Survival wind speed	90 m/s (324 Km/h, 201 mph)			
	Maximum equipment weight	2 x 50 Kg (2 x 110.2 lbs)			
Packaging dimension	Length	Width	Height	Package Weight	Product Weight
Universal B2B Bracket CC110 (SXK 125 5394/2)	480 mm (18.9 in)	360 mm (14.2 in)	80 mm (3.2 in)	10.4 Kg (22.9 lbs)	10.0 Kg (22.0 lbs)

287 01- SXK 125 5394/2, Rev. A
©Ericsson AB 2021

1 PROPOSED RRU BACK TO BACK BRACKET DETAIL
SCALE: N.T.S.

NOTE: THIS SHEET WAS CREATED BY OTHERS AND PROVIDED AT THE REQUEST OF THE CUSTOMER WITHOUT EDIT.

SUPPLEMENTAL

SHEET NUMBER:	REVISION:
R-608	-

Copyright © 2025 ATC IP LLC, All Rights Reserved

AMERICAN TOWER®
CORPORATION

Mount Analysis Report

Mount Type	:	10.5 ft Sector Frame
ATC Asset Name	:	SPOUT SPRINGS NC
ATC Asset Number	:	280251
Engineering Number	:	14884017_C8_02
Mount Elevation	:	190.5 ft
Proposed Carrier	:	AT&T Mobility
Carrier Site Name	:	368-389
Carrier Site Number	:	WSVWN0054969
Site Location	:	641 NC Hwy 24-87 Cameron, NC 27332-6191 35.264775, -79.048239
County	:	Harnett
Date	:	March 5, 2025
Max Usage	:	100%
Analysis Result	:	Contingent Pass

Prepared By:
Zach Stoll
Structural Engineer I

NORTH CAROLINA PROFESSIONAL SEAL 054229 ENGINEER ISAAC P. DODSON

Isaac Dodson

Digitally signed by Isaac Dodson
Date: 2025.03.05 15:57:15 -05'00'

COA: P-1177

Introduction

The purpose of this report is to summarize results of the mount analysis performed for AT&T Mobility at 190.5 ft.

Supporting Documents

Specifications Sheet:	Kenwood T1672KT10, dated April 6, 2016
Radio Frequency Data Sheet:	RFDS ID #12626511, dated October 4, 2024
Reference Photos:	Site photos from 2022

Analysis

This mount was analyzed using American Tower Corporation's Mount Analysis Program and RISA-3D

Basic Wind Speed:	118 mph (3-Second Gust)
Basic Wind Speed w/ Ice:	37 mph (3-Second Gust) w/ 0.62" radial ice concurrent
Codes:	ANSI/TIA-222-I
Exposure Category:	C
Risk Category:	II
Topographic Factor Procedure:	Method 1
Feature:	Flat
Crest Height (H):	0 ft
Crest Length (L):	0 ft
Spectral Response:	Sds = 0.18, Sd1 = 0.11
Site Class:	D - Stiff Soil
Live Loads:	Lm = 500 lbs, Lv = 250 lbs

***Live Load(s) reduction is confirmed to either not govern or not be applicable**

Conclusion

Based on the analysis results, the antenna mount meets the requirements per the applicable codes listed above provided the modifications listed below are completed:

- Install P2 (2.375" x 120") in mount pipe position MA1 and MA2. Connect with Site Pro 1 HMB-AU (or approved equivalent) U-Bolts.
- Replace mount pipe in positions 1 and 3 with P2 (2.375" x 120"). Connect with Site Pro 1 UB1212 (or approved equivalent) U-Bolts.
- Replace mount pipe in position 2 with P2.5 (2.875" x 120"). Connect with Site Pro 1 UB1300 (or approved equivalent) U-Bolts.
- No structural failures were addressed with the noted contingencies. Contingencies address Carrier's antenna spacing requirements.
- The rough cost estimate, pre-MOD design, is estimated to be ≤$10k.

If you have any questions or require additional information, please reach out to your American Tower contact. If you do not have an American Tower contact and have an Engineering question, please contact MountAnalysis@americantower.com. Please include the American Tower site name, site number, and engineering number in the subject line for any questions.

A.T. Engineering Service, PLLC - 1 Fenton Main, Suite 300 - Cary, NC 27511 - 919.468.0112 Office - 919.466.5414 Fax - www.americantower.com

Copyright © 2025 ATC IP LLC, All Rights Reserved

SUPPLEMENTAL

SHEET NUMBER:	REVISION:
R-609	-

(-) MOUNT ANALYSIS

NOTE: THIS SHEET WAS CREATED BY OTHERS AND PROVIDED AT THE REQUEST OF THE CUSTOMER WITHOUT EDIT. PLEASE REFERENCE THE MOUNT ANALYSIS REPORT FOR COMPLETE MOUNT ANALYSIS CALCULATIONS AND DETAILS. SUPPLEMENTAL PAGES INCLUDED IN THE CONSTRUCTION DRAWINGS ARE FOR REFERENCE ONLY. GENERAL CONTRACTOR IS TO VERIFY THEY HAVE THE MOST RECENT MOUNT ANALYSIS PRIOR TO CONSTRUCTION.