Initial Application Date: 4.22.15

Application # 1550035966

DRB # _____ CU # _____

SCANNED

Land's Aks Fourth Ave Inc. COMMERCIAL

COUNTY OF HARNETT LAND USE APPLICATION

Central Permitting (Physical) 108 E. Front Street, Lillington, NC 27546 (Mailing) PO Box 65 Lillington NC 27546 Phone: (910) 893-7525 opt # 2 Fax: (910) 893-2793 www.harnett.org/permits

~~LANDOWNER~~ Building: Touchstone Realty Mailing Address: 622 Buffalo Lake Rd DATE

City: Sanford State: NC Zip: 27332 Contact #: 843.761.6009 Email: bcsignservice@aol.com

APPLICANT*: BSC Sign Service, LLC Mailing Address: P.O. Box 836

City: Moncks Corner State: SC Zip: 29461 Contact #: 843.761.6009 Email: bcsignservice@aol.com

*Please fill out applicant information if different than landowner

CONTACT NAME APPLYING IN OFFICE: Diane Villanueva Phone #: 843.761.6009

PROPERTY LOCATION: Subdivision: 622 Buffalo Lake Rd. Lot #: 3 Lot Size: 1.28AC

State Road #: 622 State Road Name: Buffalo Lake Rd Map Book&Page: 2014F/799A

Parcel: 03 9586 0024 08 PIN: 9587-53-3087.000

Zoning: RA20R Flood Zone: X Watershed: NA Deed Book&Page: 2924,237 Power Company*: _____

*New structures with Progress Energy as service provider need to supply premise number _____ from Progress Energy.

SPECIFIC DIRECTIONS TO THE PROPERTY FROM LILLINGTON: W. on W. old Rd/NC-27 towards S. 8th Street - Slight left onto NC 27 W/NC 27 - Turn left onto Buffalo Lake Rd. Property on the right

PROPOSED USE:

- ☐ Multi-Family Dwelling No. Units: _____ No. Bedrooms/Unit: _____
- ☑ Business Sq. Ft. Retail Space: _____ Type: _____ # Employees: _____ Hours of Operation: _____
- ☐ Daycare # Preschoolers: _____ # Afterschoolers: _____ # Employees: _____ Hours of Operation: _____
- ☐ Industry Sq. Ft: _____ Type: _____ # Employees: _____ Hours of Operation: _____
- ☐ Church Seating Capacity: _____ # Bathrooms: _____ Kitchen: _____
- ☐ Accessory/Addition/Other (Size ____x____) Use: _____

Water Supply: ____ County ____ Existing Well ____ New Well (*# of dwellings using well* _____) ***MUST** have operable water before final

Sewage Supply: ____ New Septic Tank (*Complete Checklist*) ____ Existing Septic Tank (*Complete Checklist*) ____ County Sewer

Comments: I am applying to install a 18' x 7'7" sign for Touchstone Realty. See attached Colored rendering

If permits are granted I agree to conform to all ordinances and laws of the State of North Carolina regulating such work and the specifications of plans submitted. I hereby state that foregoing statements are accurate and correct to the best of my knowledge. Permit subject to revocation if false information is provided.

Diane Villanueva — **Signature of Owner or Owner's Agent**

3.16.2015 — **Date**

****This application expires 6 months from the initial date if permits have not been issued****

A RECORDED SURVEY MAP, RECORDED DEED (OR OFFER TO PURCHASE) AND PLAT ARE REQUIRED WHEN APPLYING FOR LAND USE APPLICATION

Date: _____

Site Address: 622 Buffalo Lake Road Sanford, NC 27332 Phone: 919-499-4600

Directions to job site from Lillington: 27 west to Buffalo Lake Road to site

35944

Subdivision: _____ Lot: _____

Description of Proposed Work: Install new Road Sign

SCANNED

Heated SF _____ Unheated SF _____

General Contractor Information: Building Cost $ 20,482.00

B & C Sign Service, LLC — 843-761-6009

Building Contractor's Company Name — Telephone

P.O. Box 836 Moncks Corner, SC 29461 — bcsignservice@aol.com

Address — Email Address

Diane Villanueva

Signature of Owner/Contractor/Officer(s) of Corporation — License #

Electrical Contractor Information: Electrical Cost $ _____

Description of Work _____ Service Size: _____ Amps #T-Poles _____

Electrical Contractor's Company Name — Telephone

Address — Email Address

Signature of Owner/Contractor/Officer(s) of Corporation — License #

Mechanical Contractor Information: Mechanical Cost $ _____

Description of Work _____ # Units _____

Mechanical Contractor's Company Name — Telephone

Address — Email Address

Signature of Owner/Contractor/Officer(s) of Corporation — License #

Plumbing Contractor Information: Plumbing Cost $ _____

Description of Work _____ # Baths _____

Plumbing Contractor's Company Name — Telephone

Address — Email Address

Signature of Owner/Contractor/Officer(s) of Corporation — License #

Insulation Contractor Information

Insulation Contractor's Company Name & Address — Telephone

***NOTE: General Contractor must fill out and sign the second page of this application**

Signature of Officer(s) of Corporation _____ License # _____

Fire Alarm Contractor Information

Fire Alarm Contractor's Company Name _____ Telephone _____

Address _____ Email Address _____

Signature of Officer(s) of Corporation _____ License # _____

Driveway Access - NC Department of Transportation Driveway Access/Permit? _____Yes _____ No

I hereby certify that I have the authority to make necessary application, that the application is correct and that the construction will conform to the regulations in the Building, Electrical, Plumbing and Mechanical codes, and the Harnett County Zoning Ordinance. I state the information on the above contractors is correct as known to me and if **any** changes occur including listed contractors, site plan, number of bedrooms, building and trade plans, Environmental Health permit changes or proposed use changes, I certify it is my responsibility to notify the Harnett County Central Permitting Department of any and all changes.

Expired Permit Fees - 6 months to 2 years permit re-issue fee is $150.00. After 2 years re-issue fee is charged at full price per current fee schedule.

Signature of Owner/Contractor/Officer(s) of Corporation _____ Date 5/29/2015

Affidavit for Worker's Compensation N.C.G.S. 87-14

The undersigned applicant being the:

_____ General Contractor _____ Owner ✓ Officer/Agent of the Contractor or Owner

Do hereby confirm under penalties of perjury that the person(s), firm(s) or corporation(s) performing the work set forth in the permit:

_____ Has three (3) or more employees and has obtained workers' compensation insurance to cover them.

_____ Has one (1) or more subcontractors(s) and has obtained workers' compensation insurance to cover them.

✓ Has one (1) or more subcontractors(s) who has their own policy of workers' compensation insurance covering themselves.

✓ Has no more than two (2) employees and no subcontractors.

While working on the project for which this permit is sought it is understood that the Central Permitting Department issuing the permit may require certificates of coverage of worker's compensation insurance prior to issuance of the permit and at any time during the permitted work from any person, firm or corporation carrying out the work.

Company or Name: B & C Sign Service, LLC

Sign w/Title: Dave Villanueva President Date: 5/28/2015

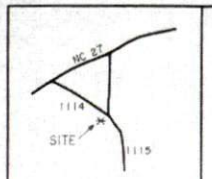

NOT TO SCALE

VICINITY MAP

NORTH BY
P.C. F, SL. 799-A

THIS PROPERTY IS NOT IN A SPECIAL FLOOD HAZARD AREA ACCORDING TO MAP NUMBER: 3710958600J OF THE FEDERAL EMERGENCY MANAGEMENT AGENCY. EFF. DATE: OCTOBER 3, 2006

NORTH CAROLINA, HARNETT COUNTY
PRESENTED FOR REGISTRATION ON THE ____ DAY
OF _____, 19 _____, AT _____ M.
RECORDED AT MAP NUMBER _____

REGISTER OF DEEDS - ASS'T. DEPUTY

MINIMUM BUILDING SETBACKS
FRONT - 35'
SIDELINES - 10'
REAR - 25'

LEGEND:
EIP-EXISTING IRON PIPE OR IRON ROD
NIP-NEW IRON PIPE OR IRON ROD
NRRS-NEW RAILROAD SPIKE
ERRS-EXISTING RAILROAD SPIKE
NPK-NEW P.K. NAIL
EPK EXISTING P.K. NAIL
ECM-EXISTING CONCRETE MONUMENT
C/L-CENTER LINE
PP-POWER POLE
LP-LIGHT POLE
R/W-RIGHT OF WAY
CP-CALCULATED POINT
-E- -ELECTRICITY
+ - GROUND ELEVATION
-X-X-X- FENCE

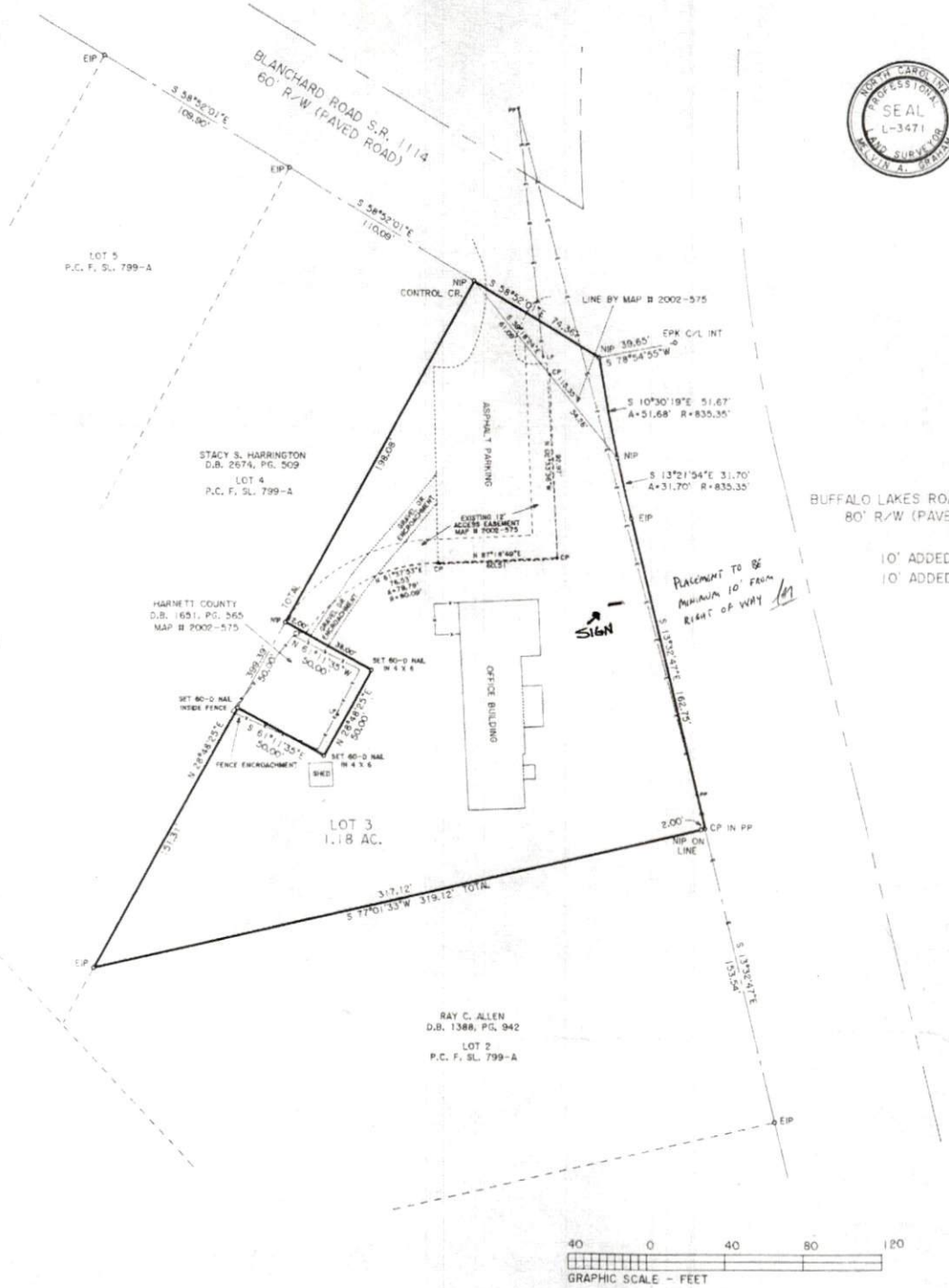

40 0 40 80 120
GRAPHIC SCALE - FEET

NORTH CAROLINA PROFESSIONAL SEAL L-3471 LAND SURVEYOR MELVIN A. GRAHAM

I, MELVIN A. GRAHAM, CERTIFY THAT THIS PLAT WAS DRAWN UNDER MY SUPERVISION FROM AN ACTUAL SURVEY MADE UNDER MY SUPERVISION (DEED DESCRIPTION RECORDED IN BOOK 2924 PAGE 237); THAT THE BOUNDARIES NOT SURVEYED ARE CLEARLY INDICATED AS DRAWN FROM INFORMATION FOUND IN BOOK 1651 , PAGE 565 ; THAT THE RATIO OF PRECISION AS CALCULATED IS 1: 10,000 , THAT THIS PLAT WAS PREPARED IN ACCORDANCE WITH G.S. 47-30 AS AMENDED. WITNESS MY ORIGINAL SIGNATURE, REGISTRATION NUMBER AND SEAL.

THIS 18 DAY OF JUNE A.D. 2014

MELVIN A. GRAHAM, PLS. REGISTRATION NUMBER L-3471

NOTE:
THIS SURVEY IS OF AN EXISTING PARCEL OR PARCELS OF LAND AND DOES NOT CREATE A NEW STREET OR CHANGE AN EXISTING STREET.

SURVEYOR

STATE OF NORTH CAROLINA
COUNTY OF HARNETT

I, _____ REVIEW OFFICER OF HARNETT COUNTY, CERTIFY THAT THE MAP OR PLAT TO WHICH THIS CERTIFICATION IS AFFIXED MEETS ALL STATUTORY REQUIREMENTS FOR RECORDING.

DATE REVIEW OFFICER

Site Plan Approval
The Harnett County Planning Department
hereby approves this site plan

3/30/15

Date Harnett County Planning Dept.

NOTES:
PROPERTY CONSIST OF ALL OF THE SAKS FOURTH AVENUE LLC PROPERTY AS RECORDED IN D.B. 2924, PG. 237 HARNETT COUNTY REGISTRY.

ALL AREAS BY COORDINATE METHOD

PIN # 9587-53-3087.000

PID # 039586 0024 08

PROPERTY ZONED RA-20R

PROPERTY NOT IN WATERSHED

TOWNSHIP	COUNTY	STATE
BARBECUE	HARNETT	NC

(OWNER) SURVEY FOR
SAKS FOURTH AVENUE LLC
83 CAROLINA LAKES ROAD
SANFORD, NC 27332

DATE: 06/17/2014
SCALE: 1"=40'
PROJECT: 5414
REVISION:

MELVIN A. GRAHAM, PLS.
3679 NICHOLSON ROAD
CAMERON, NC 28326
PHONE(919)499-6174

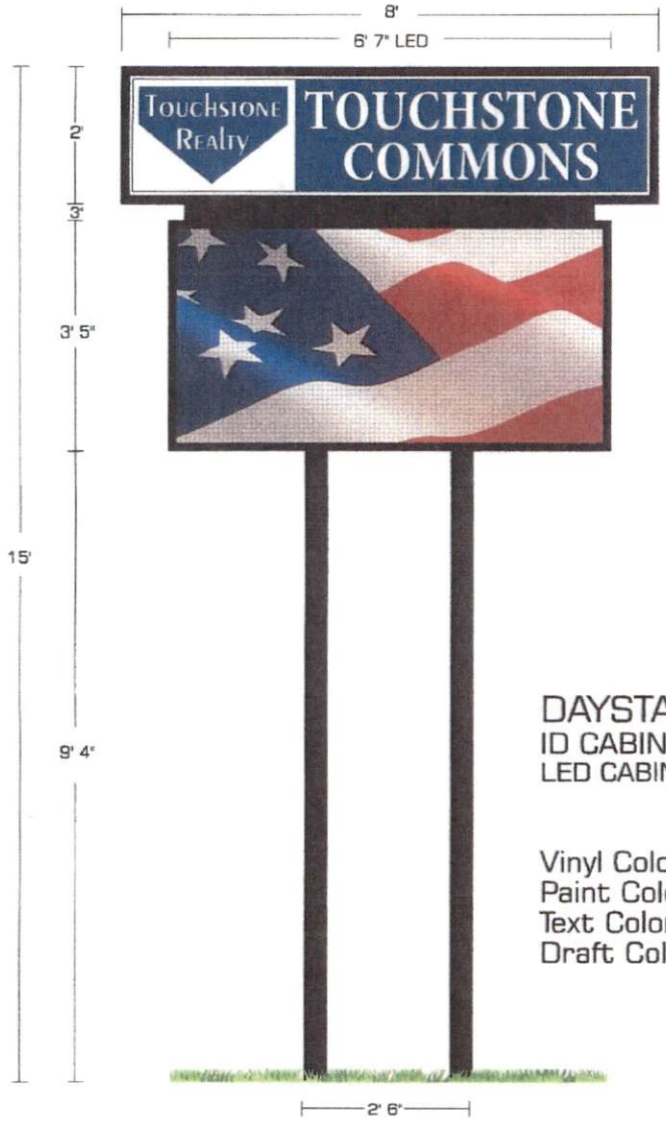

DAYSTAR EXP COLOR 20mm 48x96
ID CABINET: 2' x 8'
LED CABINET: 3' 5" x 6' 7"

Vinyl Color: Blue 3630-36
Paint Color: Black
Text Color: White
Draft Color: White

Site Plan Approval
The Harnett County Planning Department
hereby approves this site plan
3/30/15
Date
Harnett County Planning Dept.

3/8"=1' SK. #854750-2B-S 3.17.15 F/RKIRKENDALE CUST. #3111715 SOLD

GRAPHICS DISCLAIMER
DUE TO THE PHYSICAL LIMITATIONS OF THE PAPER AND INK-BASED PRINTING PROCESS THIS CUSTOM ARTWORK IS NOT INTENDED TO PROVIDE AN EXACT MATCH BETWEEN INK, VINYL, PAINT, OR LED COLOR. ARTIST'S RENDITION OF BRICKWORK, MASONRY AND LANDSCAPING IS NOT INCLUDED IN THE PROPOSAL. ANY MEASUREMENTS SHOWN ARE APPROXIMATIONS; DIMENSIONS OF FINAL PRODUCT MAY VARY. LED IMAGES SHOWN ARE SIMULATED TO REPLICATE RESOLUTION FROM OPTIMUM VIEWING DISTANCE. A STEWART SIGN IS DESIGNED TO BE ILLUMINATED AT ALL TIMES AS IT INCREASES THE LIFE OF THE SIGN'S LIGHTING COMPONENTS. SKETCHES ARE BASED OFF OF THIS PREMISE.

stewartsigns
America's Premier Sign Company
PH. 1-800-237-3928 FAX 1-800-485-4280

ORIGINAL DESIGN DO NOT DUPLICATE

APPROVED AS SHOWN.
X _____ DATE _____ 1. _____
APPROVED WITH LISTED CHANGES 2. _____
X _____ DATE _____ 3. _____

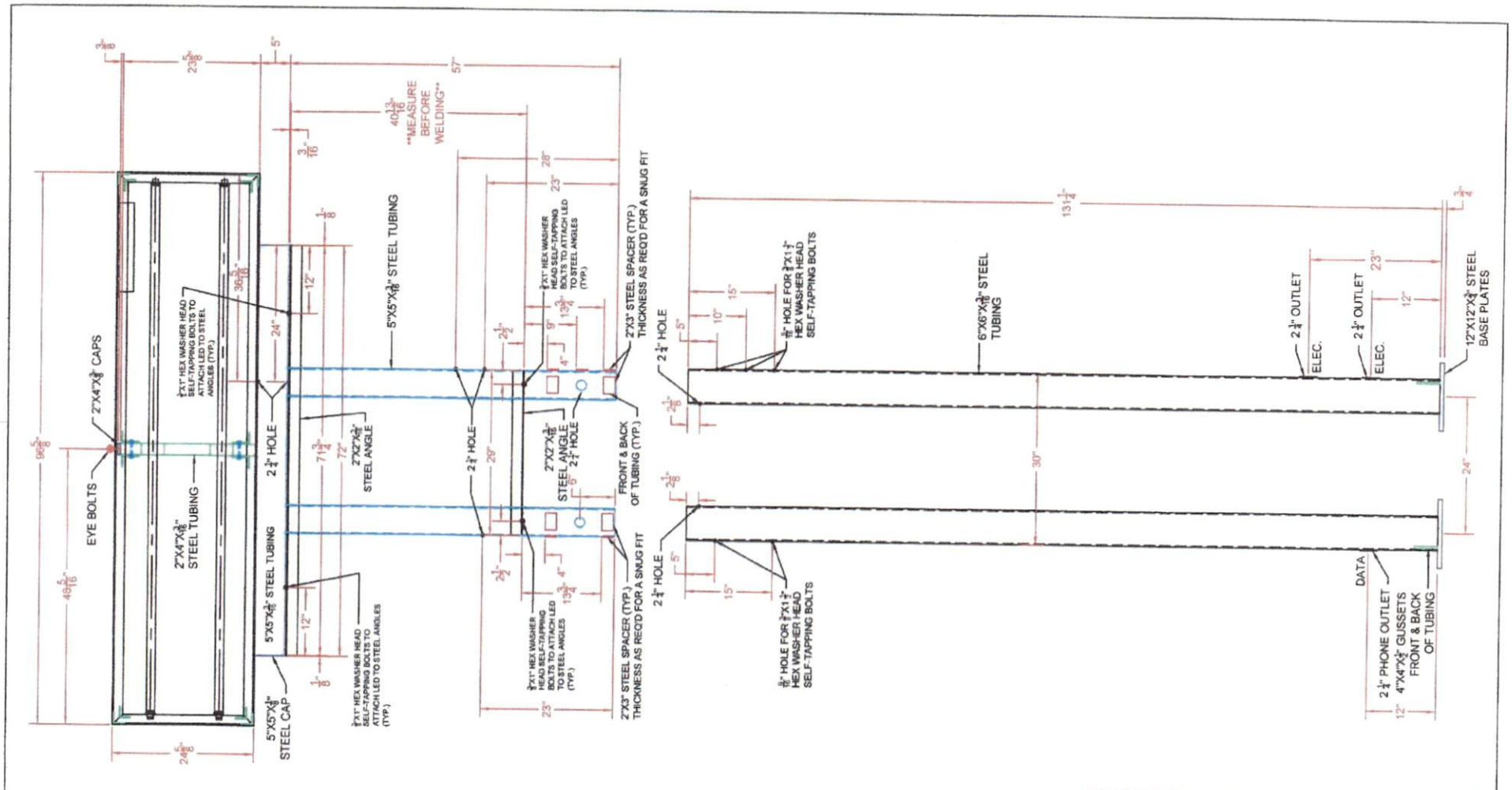

DRAWING DESIGNED TO BE PRINTED ON 8 1/2"X14" PAPER

EBSCO Sign Group 2201 CANTU COURT, SUITE 215 SARASOTA, FL 34237 PH: 1-800-237-3928 FAX 1-800-485-4280 stewartsigns	Date:03-03-15 Drawn by: JRM REVISION / DESCRIPTION	J.M.S. TEMPLATE MUST BE USED TO SET THREADED RODS INTO CONCRETE			Sign Model: DAYSTAR EXP 20mm 48X96	Page 1 OF 5
		Drawing #: DEXP-20mm-C-48x96	Sketch #: 854750-2	Customer #: 3111715	Customer Name: TOUCHSTONE REALTY	Customer Address: 622 BUFFALO LAKE RD. SANFORD, NC 27332

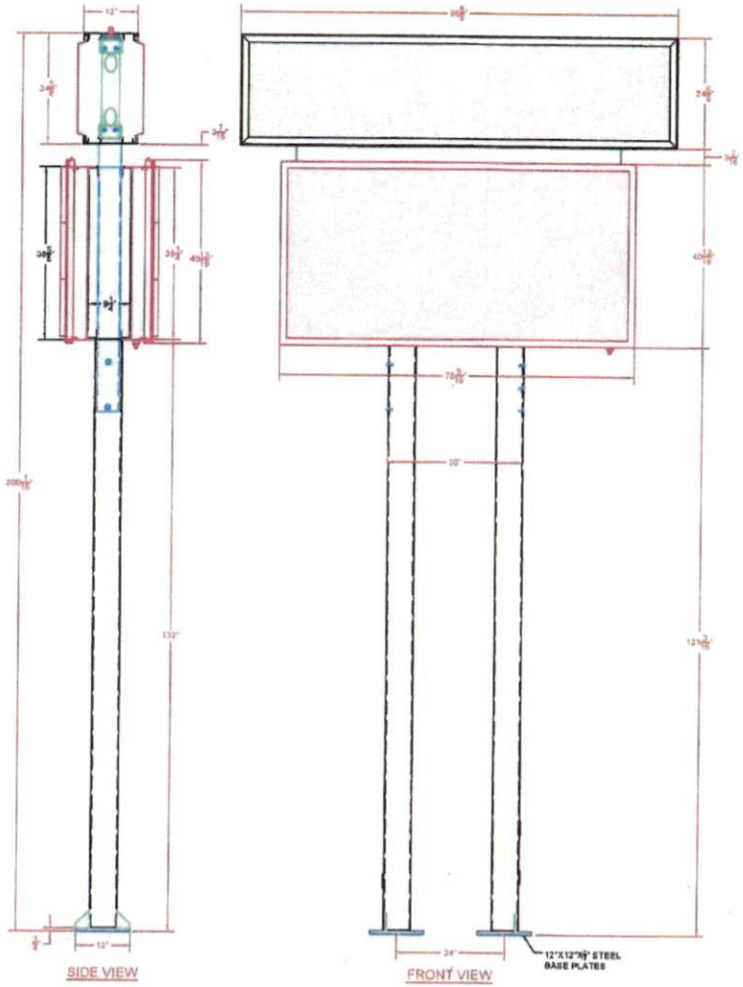

DRAWING DESIGNED TO BE PRINTED ON 8 ½"X14" PAPER

EBSCO Sign Group 2201 CANTU COURT, SUITE 235 SARASOTA, FL 34232 PH: 1-800-237-3928 FAX: 1-800-685-4380 stewartsigns	Date: 03-03-15 Drawn by: JRM REVISION / DESCRIPTION	J.M.S. TEMPLATE MUST BE USED TO SET THREADED RODS INTO CONCRETE			Sign Model: DAYSTAR EXP 20mm 48X96	Page 2 OF 5
		Drawing #: DEXP-20mm-C-48x96	Sketch #: 854750-2	Customer #: 3111715	Customer Name: TOUCHSTONE REALTY	Customer Address: 622 BUFFALO LAKE RD. SANFORD, NC 27332

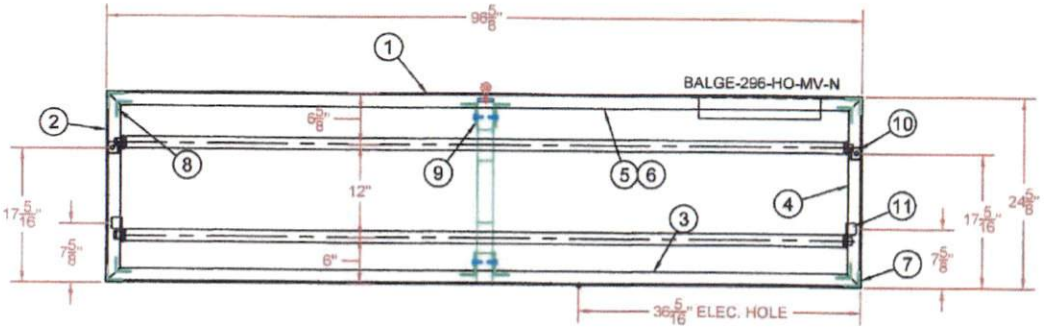

ITEM	QTY.	DESCRIPTION
1	2	12" HINGE EXTRUSION
2	2	12" HINGE EXTRUSION
3	2	1 1/2"X 1" "F" RETAINER
4	4	1 1/2"X 1" "F" RETAINER
5	2	1 1/2" HINGE RETAINER
6	6	HINGE BRACKET
7	4	2" X 2" X 3/16" ALUMINUM ANGLE
8	4	2" X 2" X 3/16" ALUMINUM ANGLE
9	4	2" X 3" X 3/16" ALUMINUM ANGLE
10	4	PROP ROD BRACKET WELDED TO "F" RETAINER @ 23 5/16"
11	4	PROP ROD BRACKET WELDED TO CABINET @ 23 3/8"

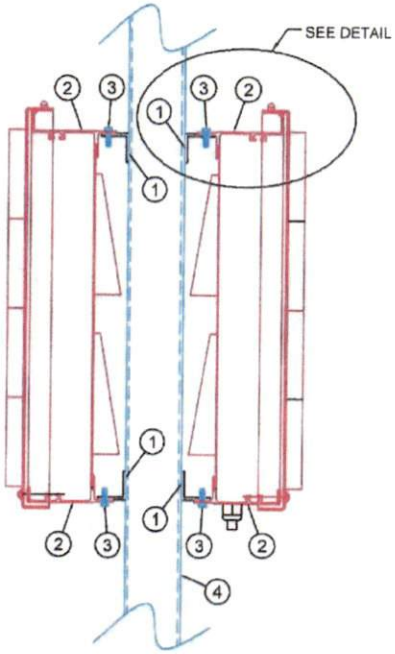

MOUNTING ANGLES DETAIL

NOT TO SCALE

1. STEEL ANGLE, WELDED TO STEEL TUBE
2. ALUMINUM LED CABINET
3. FASTENER
4. STEEL TUBE, A500 GRADE B

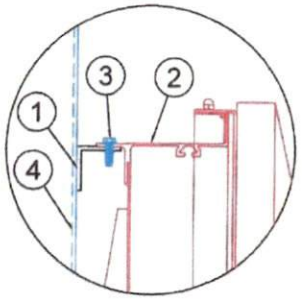

DETAIL

DRAWING DESIGNED TO BE PRINTED ON 8 1/2"X14" PAPER

EBSCO Sign Group
2201 CANTU COURT, SUITE 215
SARASOTA FL 34232
PH. 1-800-257-3928 FAX 1-800-485-0780
stewartsigns

Date:03-03-15
Drawn by: JRM

REVISION	DESCRIPTION

J.M.S. TEMPLATE MUST BE USED TO SET THREADED RODS INTO CONCRETE

Sign Model: DAYSTAR EXP 20mm 48X96

Page 3 OF 5

Drawing #:	Sketch #:	Customer #:	Customer Name:	Customer Address:
DEXP-20mm-C-48x96	854750-2	3111715	TOUCHSTONE REALTY	622 BUFFALO LAKE RD. SANFORD, NC 27332

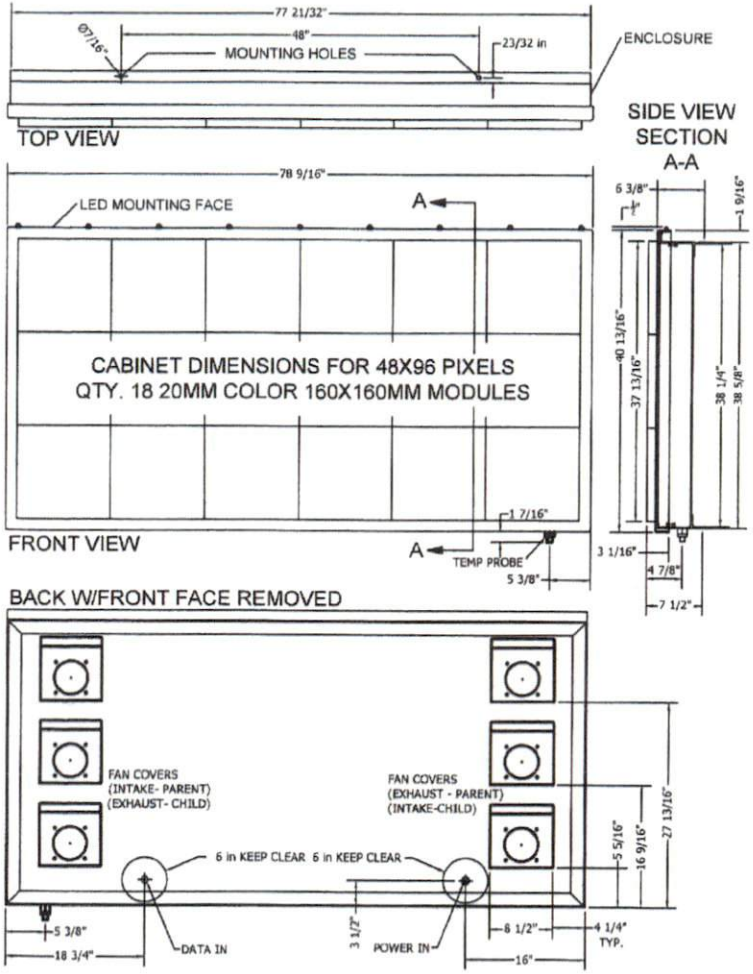

CUSTOMER: Touchstone Realty
Sanford, NC 27332
Customer No.: 3111715

DAYSTAR EXP LED DISPLAY
Color 2RGB/Pixel, Matrix 48x96 Pixels
Double Sided
POWER REQUIREMENTS / DISPLAY:
Parent 13.2FLA / 120VAC / 20A Circuit #1
Child 13.2FLA / 120VAC / 20A Circuit #2
ESTIMATED WEIGHT: 310 lbs. Ea.
DIMENSION TOLERANCE: +/- $\frac{1}{8}$"

DRAWING DESIGNED TO BE PRINTED ON 8 $\frac{1}{2}$"X14" PAPER

EBSCO Sign Group
2201 CANTU COURT, SUITE 215
SARASOTA, FL 34232
PH 1-800-257-8926 FAX 1-800-485-4280
stewartsigns

Date:03-03-15
Drawn by: JRM

REVISION	DESCRIPTION

J.M.S. TEMPLATE MUST BE USED TO SET THREADED RODS INTO CONCRETE

Sign Model: DAYSTAR EXP 20mm 48X96

Drawing #:	Sketch #:	Customer #:	Customer Name:	Customer Address:
DEXP-20mm-C-48x96	854750-2	3111715	TOUCHSTONE REALTY	622 BUFFALO LAKE RD. SANFORD, NC 27332

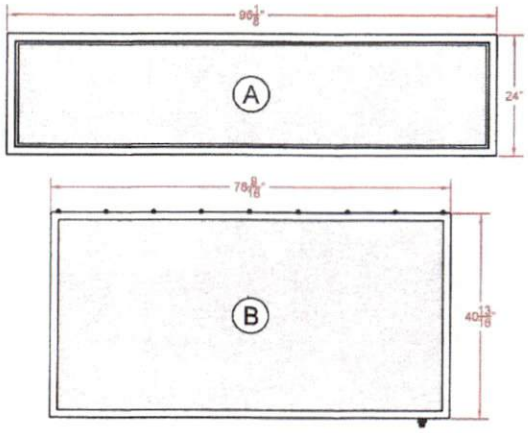

FACE DETAIL
NOT TO SCALE

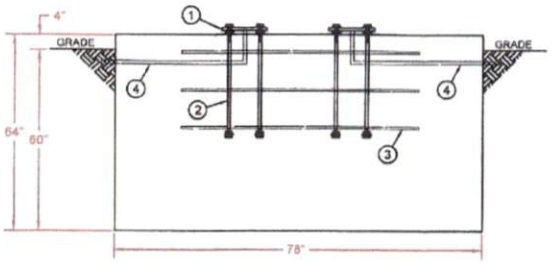

FOOTER - FRONT VIEW
NOT TO SCALE

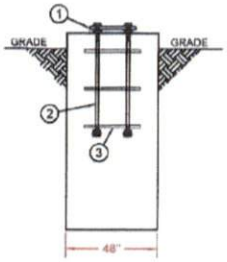

FOOTER - SIDE VIEW
NOT TO SCALE

FACE DETAIL

A. HEADER PANEL SECTION, $\frac{1}{8}$" THERMO-FORMED UV RESISTANT MAKROLON SL POLYCARBONATE DECORATION PER STEWART SIGNS ARTWORK. DECORATED WITH 3M HIGH PERFOMANCE TRANSLUCENT VINYL.
B. DAYSTAR EXP LED

FOOTER DETAIL

1. 12"X12"X3/4" STEEL BASE PLATES, 2 REQUIRED
2. 1"X30" THREADED ROD, 8 REQUIRED
   TAPE THE EXPOSED TOP OF THE THREADED RODS FOR PROTECTION AGAINST CONCRETE.
3. #5 REBAR OR BETTER, TIED AT EACH JOINT. SUPPLIED BY THE CUSTOMER
4. CONDUIT, SUPPLIED BY THE CUSTOMER

NOTES

- DESIGNED FACTOR MEETS OR EXCEEDS 120 MPH WIND LOAD, EXPOSURE B.
- 3,000 PSI CONCRETE - LESS THAN 5.25 CUBIC YARDS NECESSARY

ELECTRICAL INFO

- ID CABINET REQUIRES (1) 20 AMP CIRCUIT, 120 VOLTS, MAX DRAW 2 AMPS PER CIRCUIT
- LED CABINET REQUIRES (2) 20 AMP CIRCUITS (1 PER SIDE), 120 VOLTS, MAX DRAW 13.2 AMPS PER CIRCUIT
- UL LISTED - E50724
- SIGNS SHALL BE GROUNDED BY CONNECTION TO THE EQUIPMENT GROUNDING CONDUCTOR OF THE SUPPLY BRANCH CIRCUIT.
- LED COMMUNICATION METHOD: SHORT-RANGE WIRELESS

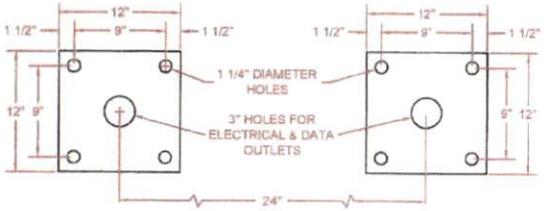

DATA CABLE MUST BE PLACED IN SEPARATE CONDUIT FROM ELECTRICAL

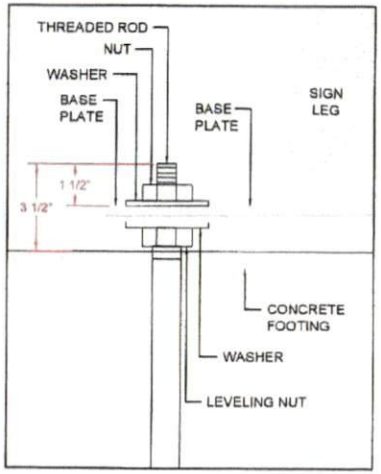

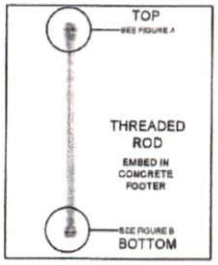

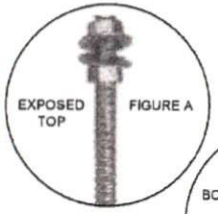

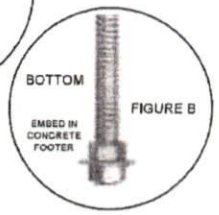

DRAWING DESIGNED TO BE PRINTED ON 8 $\frac{1}{2}$"X14" PAPER

EBSCO Sign Group 2201 CANTU COURT, SUITE 215 SARASOTA FL 34232 PH: 1-800-237-3328 FAX 1-800-485-4280 stewartsigns	Date:03-03-15 Drawn by: JRM REVISION / DESCRIPTION	J.M.S. TEMPLATE MUST BE USED TO SET THREADED RODS INTO CONCRETE		Sign Model: DAYSTAR EXP 20mm 48X96	Page 5 OF 5
		Drawing #: DEXP-20mm-C-48x96	Sketch #: 854750-2	Customer #: 3111715	Customer Name: TOUCHSTONE REALTY	Customer Address: 622 BUFFALO LAKE RD. SANFORD, NC 27332

Donna Johnson

From: B & C Sign Service, LLC <bcsignservice@aim.com>
Sent: Tuesday, June 02, 2015 3:36 PM
To: Donna Johnson
Subject: App #15 50035966
Attachments: Building and Trades Permits0001.jpg; Building and Trades Permits0002.jpg

Good afternoon,

See attached application for building and trades permit. We are installing this sign for $3500. If you have any questions or need additional information please let me know. Have a wonderful day!

Thank you,

Diane Villanueva
B & C Sign Service, LLC
843-761-6009-Office
843-761-6078-Fax
bcsignservice@aol.com

35964

672 Buffalo Lake Rd

6.3.15
emailed
comment
for
privilege license.

HARNETT COUNTY CENTRAL PERMITTING
P.O. BOX 65
LILLINGTON, NC 27546
For Inspections Call: (910) 893-7525 Fax: (910) 893-2793
Bldg Insp scheduled before 2pm available next business day.

Application Number . . . . . 15-50035966 Date 6/04/15
Property Address . . . . . 622 BUFFALO LAKE RD
PARCEL NUMBER . . . . . 03-9586- - -0024- -08-
Application type description CP STANDALONE SIGN PERMIT
Subdivision Name . . . . . .
Property Zoning . . . . . PENDING

Owner

SAKS FOURTH AVENUE LLC
281 BUFFALO LAKE RD
SANFORD NC 27332

Contractor

B & C SIGN SERVICE
PO BOX 836
MONCHKS CORNER SC 29461
(843) 761-6009

Applicant

B & C SIGN SERVICE LLC
PO BOX 836
MONCHKS CORNER SC 29461
(843) 761-6009

--- Structure Information 000 000 18'X7.7" POLE SIGN
Other struct info . . . . . PROPOSED USE POLE SIGN
SEPTIC - EXISTING? NA

Permit . . . . . PRIVILEGE LICENSE
Additional desc . .
Phone Access Code . 1091446
Issue Date . . . . 6/03/15 Valuation 0
Expiration Date . . 6/02/16

Permit . . . . . SIGN (BLDG) PERMIT
Additional desc . .
Phone Access Code . 1091438
Issue Date . . . . 6/03/15 Valuation 0
Expiration Date . . 6/02/16

Permit . . . . . SIGN (PLANNING) PERMIT
Additional desc . .
Phone Access Code . 1083500
Issue Date . . . . 6/03/15 Valuation 0
Expiration Date . . 12/01/15

Special Notes and Comments
T/S: 04/22/2015 08:51 AM JBROCK ----
622 BUFFALO LAKE RD

_____

_____

HARNETT COUNTY CENTRAL PERMITTING
P.O. BOX 65
LILLINGTON, NC 27546
For Inspections Call: (910) 893-7525 Fax: (910) 893-2793
Bldg Insp scheduled before 2pm available next business day.

Application Number . . . . . 15-50035966 Date 6/04/15
Property Address . . . . . 622 BUFFALO LAKE RD
PARCEL NUMBER . . . . . 03-9586- - -0024- -08-
Application description . . . CP STANDALONE SIGN PERMIT
Subdivision Name . . . . . .
Property Zoning . . . . . PENDING

Required Inspections

Seq	Phone Insp#	Insp Code	Description	Initials	Date
Permit type . . . . SIGN (BLDG) PERMIT					
999	179	C179	C*BLDG FINAL	_____	__/__/__
999	151	C151	C*BLDG FOOTING	MR AP	6/04/15
Permit type . . . . SIGN (PLANNING) PERMIT					
999	818	Z818	PZ*ZONING INSPECTION	_____	__/__/__
999	820	Z820	PZ*ZONING/FINAL INSPECTION	_____	__/__/__

ADDRESS . : 622 BUFFALO LAKE RD SUBDIV:
CONTRACTOR : B & C SIGN SERVICE PHONE : (843) 761-6009
OWNER . . : SAKS FOURTH AVENUE LLC PHONE :
PARCEL . . : 03-9586- - -0024- -08-
APPL NUMBER: 15-50035966 CP STANDALONE SIGN PERMIT
DIRECTIONS : T/S: 04/22/2015 08:51 AM JBROCK ----
622 BUFFALO LAKE RD

STRUCTURE: 000 000 18'X7.7" POLE SIGN
SIGN TYPE . . . . : SINGLE FACED
PROPOSED USE . . . . . : POLE SIGN SEPTIC - EXISTING? . . . . : NA

PERMIT: CPSP 00 CP SIGN PERMIT (BLDG)

TYP/SQ	REQUESTED COMPLETED	INSP RESULT	DESCRIPTION RESULTS/COMMENTS
C151 01	6/04/15	MR	C*BLDG FOOTING TIME: 17:00 VRU #: 002667822
	6/04/15	AP	T/S: 06/03/2015 12:12 PM DJOHNSON ----------
			WOULD LIKE INSPECTION AFTER 1PM PLEASE
			T/S: 06/04/2015 02:09 PM MREARIC ----------
C179 01	6/15/15	TI	C*BLDG FINAL VRU #: 002673440
	11	~~AP MR~~	

CA 148

PERMIT: CPZS 00 CP SIGN PERMIT (PLANNING)

TYP/SQ	REQUESTED COMPLETED	INSP RESULT	DESCRIPTION RESULTS/COMMENTS
Z820 01	6/15/15	TI	PZ*ZONING/FINAL INSPECTION VRU #: 002673459

---------- COMMENTS AND NOTES ----------

ADDRESS . : 622 BUFFALO LAKE RD SUBDIV:
CONTRACTOR : B & C SIGN SERVICE PHONE : (843) 761-6009
OWNER . . : SAKS FOURTH AVENUE LLC PHONE :
PARCEL . . : 03-9586- - -0024- -08-
APPL NUMBER: 15-50035966 CP STANDALONE SIGN PERMIT
DIRECTIONS : T/S: 04/22/2015 08:51 AM JBROCK ----
622 BUFFALO LAKE RD

STRUCTURE: 000 000 18'X7.7" POLE SIGN
SIGN TYPE . . . . : SINGLE FACED
PROPOSED USE . . . . . : POLE SIGN SEPTIC - EXISTING? . . . . : NA

PERMIT: CPSP 00 CP SIGN PERMIT (BLDG)

TYP/SQ	REQUESTED COMPLETED	INSP RESULT	DESCRIPTION RESULTS/COMMENTS
C151 01	6/04/15	MR	C*BLDG FOOTING TIME: 17:00 VRU #: 002667822
	6/04/15	AP	T/S: 06/03/2015 12:12 PM DJOHNSON ----------
			WOULD LIKE INSPECTION AFTER 1PM PLEASE
			T/S: 06/04/2015 02:09 PM MREARIC ----------
C179 01	6/15/15	TI	C*BLDG FINAL VRU #: 002673440

PERMIT: CPZS 00 CP SIGN PERMIT (PLANNING)

TYP/SQ	REQUESTED COMPLETED	INSP RESULT	DESCRIPTION RESULTS/COMMENTS
Z820 01	6/15/15	TI	PZ*ZONING/FINAL INSPECTION VRU #: 002673459
	6/15/15	R.B./DA	

COMMENTS AND NOTES

Copy Change 17 times per minute.

~~Copy Advertising Buffalo Medical Park Inc.~~

Sign Poles Must Be Encased.

Relocate existing sign or remove.

ADDRESS . : 622 BUFFALO LAKE RD SUBDIV:
CONTRACTOR : PHONE :
OWNER . . : SAKS FOURTH AVENUE LLC PHONE :
PARCEL . . : 03-9586- - -0024- -08-
APPL NUMBER: 15-50035966 CP STANDALONE SIGN PERMIT
DIRECTIONS : T/S: 04/22/2015 08:51 AM JBROCK ----
622 BUFFALO LAKE RD

STRUCTURE: 000 000 18'X7.7" POLE SIGN
SIGN TYPE . . . . : SINGLE FACED
PROPOSED USE . . . . . : POLE SIGN SEPTIC - EXISTING? . . . . : NA

PERMIT: CPSP 00 CP SIGN PERMIT (BLDG)

TYP/SQ	REQUESTED COMPLETED	INSP RESULT	DESCRIPTION RESULTS/COMMENTS
C151 01	6/04/15	TI	C*BLDG FOOTING TIME: 17:00 VRU #: 002667822 T/S: 06/03/2015 12:12 PM DJOHNSON ---------- WOULD LIKE INSPECTION AFTER 1PM PLEASE

---------- COMMENTS AND NOTES ----------

Please leave attachments @ job site.