CONTRACT

Email: sales@hqsteelstructures.com

Phone : (336)-600-4833

HighQuality STEEL STRUCTURES

Website: www.hqsteelstructures.com

Address: 1475 W Memorial Hwy, Harmony, NC 28634

Dealer Name :	High Quality Steel Structures	Dealer Phone :	(336) 600-4833	Install Date	
Customer Name :	Brian Loeffler	Customer Phone :	(772) 812-4429	Customer Phone 2	
Customer Address:	943 Peach Farm Rd	City	Lillington	County	
State	NC	Zip Code	27546	Tax	

Items	Price	Price
30X60' (Roof 61') Vertical Roof	$13,440.00	
14' Height (5ft on center)	$2,240.00	
Gauge : 12	$0.00	
Not Certified	$0.00	**Taxes**
3/12' Roof Pitch	$0.00	
Back Wall Closed Horizontal (Price included in utility)	$2,600.00	
Left Closed Horizontal	$1,850.00	**Subtotal**
Right Closed Horizontal	$1,850.00	
Back storage depth 40'	$2,600.00	
24x36 inch Window (Standard) on Left Wall (Qty:2)	$360.00	**Down Payment**
24x36 inch Window (Standard) on Back Wall (Qty:2)	$360.00	
18x13 ft Garage Door Frameout (Roll-Up) on Right Wall	$425.00	
18x13 ft Garage Door Frameout (Roll-Up) on Left Wall	$425.00	
36x80 inch Walk-in Door (Man Door) on Back Storage Front Wall	$325.00	**Labor**
24x36 inch Window (Standard) on Back Storage Front Wall (Qty:2)	$360.00	
36x80 inch Walk-in Door (Man Door) on Right Wall	$400.00	
12x12 ft Garage Door (Roll-Up) on Right Wall (Chain Hoist) (Qty:2)	$3,910.00	**Balance Due**
Free Colored Screws	$0.00	
26 GA Panel Upgrade	$3,351.00	
*****PLEASE CALL EACH CUSTOMER AT LEAST 30 MINUTES TO 1 HOUR BEFORE ARRIVAL*****		

Roof Style	Regular		Box Eave		Vertical	✔	Certified	✔	Uncertified	✔
Unit Size	Width	30	Length	60	Height	14	14 Gauge		12 Gauge	✔
Colors	Roof	Black	Sides/ Ends	White		Trim	Black		Wainscot	Black
Install in	Ground		Gravel		Asphalt		Other		Cement	✔
Power Available	Yes		No		Site Level		Yes		No	

Terms & Conditions

-Please inform us of any underground cables, gas lines, or any other utility lines before day of installation.
-We will not be responsible for any damage including yards or pets. We are not responsible for permits, covenant searches or restrictions. Lot must be level within 4 inches. If your ground is slightly unlevel please have leveling blocks available for the contractors. A $50.00 or more fee will be charged if any extra labor is required.
-If you do not have electricity, please have a generator ready for the installers.
-Customer serivce will contact you for directions.
-Scheduling normally takes 4-10 weeks. Holidays, busy seasons, DOT complications, truck break-downs, material shortages or changes in contractor schedules cause slight delays in scheduling.
-**DEPOSIT NON REFUNDABLE**. High Quality Steel Structures has the right to correct any errors or changes.
IMPORTANT!
-One or two days before the installation we will call you to verify the installation date and directions.
-If building is altered by customer in any way all warranties are void.
-Pay the installers the Balance Due in full at time of installation.
-A $35 Service Fee will be Charged on all returned checks. **NO** Personal Checks.

☐ I have read and completely understand the above information and given my approval for construction of the above. I understand that there is another sheet with more details on terms and conditions.
1 workmanship warranty (building must be paid in full after installation)
High Quality Steel Structures has the right to REPOSSESS the unit if NOT paid in full.

Customer Signature :		Sales Rep Name :	
Customer Email :		Sales Rep Email :	

Thank you for your purchase

Contract # ODR-003089

CONTRACT

Email: sales@hqsteelstructures.com	HighQuality STEEL STRUCTURES	Website: www.hqsteelstructures.com
Phone : (336)-600-4833		Address: 1475 W Memorial Hwy, Harmony, NC 28634

Dealer Name :	High Quality Steel Structures	Dealer Phone :	(336) 600-4833	Install Date	
Customer Name :	Brian Loeffler	Customer Phone :	(772) 812-4429	Customer Phone 2	
Customer Address:	943 Peach Farm Rd	City	Lillington	County	
State	NC	Zip Code	27546	Tax	

Items	Price	Price
Prodex Type (Roof Only)	$4,896.00	$23,603.69
Wainscot Black	$0.00	
Manufacturer Discount	$17,332.48	
Permit Required : Yes		**Taxes**
		$1,544.17
		Subtotal
		$22,059.52
		Down Payment 10%
		$2,205.95
		Labor
		Balance Due
		$21,397.74
*****PLEASE CALL EACH CUSTOMER AT LEAST 30 MINUTES TO 1 HOUR BEFORE ARRIVAL*****		

Roof Style	Regular		Box Eave		Vertical	✔	Certified	✔	Uncertified	✔
Unit Size	Width	30	Length	60	Height	14	14 Gauge		12 Gauge	✔
Colors	Roof	Black	Sides/ Ends	White		Trim	Black	Wainscot	Black	
Install in	Ground		Gravel		Asphalt		Other		Cement	✔
Power Available	Yes		No		Site Level		Yes		No	

Terms & Conditions

-Please inform us of any underground cables, gas lines, or any other utility lines before day of installation.
-We will not be responsible for any damage including yards or pets. We are not responsible for permits, covenant searches or restrictions. Lot must be level within 4 inches. If your ground is slightly unlevel please have leveling blocks available for the contractors. A $50.00 or more fee will be charged if any extra labor is required.
-If you do not have electricity, please have a generator ready for the installers.
-Customer serivce will contact you for directions.
-Scheduling normally takes 4-10 weeks. Holidays, busy seasons, DOT complications, truck break-downs, material shortages or changes in contractor schedules cause slight delays in scheduling.
-**DEPOSIT NON REFUNDABLE**. High Quality Steel Structures has the right to correct any errors or changes.
IMPORTANT!
-One or two days before the installation we will call you to verify the installation date and directions.
-If building is altered by customer in any way all warranties are void.
-Pay the installers the Balance Due in full at time of installation.
-A $35 Service Fee will be Charged on all returned checks. **NO** Personal Checks.

☐ I have read and completely understand the above information and given my approval for construction of the above. I understand that there is another sheet with more details on terms and conditions.
1 workmanship warranty (building must be paid in full after installation)
High Quality Steel Structures has the right to REPOSSESS the unit if NOT paid in full.

Customer Signature :		Sales Rep Name :	
Customer Email :		Sales Rep Email :	

Thank you for your purchase

Terms and Conditions

Our units are Risk Category I only. Risk Category II may be achieved at an additional cost depending on city & county regulations and requirements. Please inform your sales associate or consultant for a quote on achieving Risk Category II certification. It is the customer's responsibility to inform exactly what is the wind and snow certification needed for the unit to ensure, for permitting or city & county compliance, that the generic drawings meet such requirements or if a site specific plan is needed. Please inform installers of any underground cables, gas lines, or any other utility lines. If utilities are not marked, we will not be liable for the damage. Customer is responsible to inform the dealer of any county, city or state requirements to comply with local code for the unit and all the openings (doors, windows, rollup doors, etc.) High Quality Steel Structures will not be responsible for any failed inspection and fees associated with that process. If a return or repair order is required to fix any issues due to this, a return trip fee as well as a labor fee will be charged and the customer will have to pay for such charges.
We will not be responsible for permits or restrictions. Lot must be level or unit, if it is installed, it will be "AS IS" on the lot. If the land is not level or additions are to be made to the carport, a minimum of $100.00 service charge and any additional material costs will be added to the balance. High Quality Steel Structures will not be responsible for refunds of the customers deposit collected by the dealer. High Quality Steel Structures is not liable for any damages as a result of inclements weather beyond the scope of the certification included with certified units.
IF YOU ARE TAX EXEMPT, A TAX-EXEMPT CERTIFICATE MUST BE ATTACHED TO YOUR ORIGINAL ORDER(S). OTHERWISE, APPLICABLE TAX WILL BE ADDED. NO EXCEPTIONS. I have read the terms and conditions of this contract, by signing this contract, I agree to all conditions set forth herein and should I fail to make payment in full at time of delivery I understand and agree to allow High Quality Steel Structures to pursue payment by legal action and/or pick up the unit, furthermore I will be liable for all applicable charges and fees associated with the initial setup and delivery as well as any legal fees incurred by High Quality Steel Structures. Please keep the original invoice for legal matters. High Quality Steel Structures, LLC reserves the right to cancel any order.

Notes:

Base rail on standard (12' - 24' wide) and triple wide (26' x 30' wide) units are 1' shorter than the roof length (i.e. 24'x21' will have a length on the ground of 20'. The width remains at 24' wide) on all 12' - 30' wide units. All Commercial units (32' x 70' wide) will be exactly the width and length. Unit price does not include adding any sealant on, around or anywhere on or under the baserail. You may request this with your installer and they can choose to do it at a cost. This will be between the customer and installer not High Quality Steel Structures.
If you need a site specific or special drawing for your building, there will be an additional charge. This charge is non-refundable and has to be paid up front (all card transactions are subject to a 3.5% service fee). All commercial units will require a telescopic lift (32' - 70' wide)
All units 12' - 30' wide with legs over 14' will require a telescopic lift.
26-30 Wide units at 4/12, 5/12, & 6/12 pitch with legs 12' and over will require a telescopic lift provided by the customer. In some instances a labor charge can be added instead of the lift. Different factors will determine this such as the site, surface, perimeter of the build site, etc.
There is no refund on deposits on canceled orders unless it is canceled due to a refusal letter from the local county and it must be presented to process the refund.
No refunds on special orders. Once buyer accepts install date the order can no longer be canceled for any reason without payment in full for the structures
Unit comes standard with galvanized screws. Color matching screws available as an upgrade at an additional cost.
The customer must be ready for installation within 120 days of the contract date to have the price guaranteed. If the customer is not ready within 120 days and there is a price increase, the customer agrees to pay the difference in price or modify the unit to fit the budget they may have. If an exception is made it will be notated under the notes section on the customer's contract.
Installers will need about 36" around the perimeter of the unit leveled to be able to erect it (use of ladders, etc.) unless additional machinery is needed for the installation then the clearance can increase (i.e. use of a telescopic lift or telehandler).
This unit is not airtight or light proof.
High Quality Steel Structures will require, besides the down payment, 50% of the remaining balance be paid prior to scheduling the installation and the remaining 50% at the time of install (For all payments of 50%it is required to be a wire transfer from the bank). The customer may also send a certified check for the 1/2 down payment, however the check must be received by High Quality Steel Structures before the scheduling process moves forward.
Lead time starts once the customer sends site ready pictures (for all surfaces) and all permitting or requirements (if and when necessary) have been submitted to High Quality Steel Structures LLC.
Colored rollup doors will have to be paid in fullwhen the unitis ordered. No returnsor refunds as they are ordered specially for each customer.
If any payment is disputed, the customer will still be liable to return the payment to High Quality Steel Sructures and the full balance will still be owed.

Limited Warranty Explanations

14 & 12 GAUGE - We offer a 20 year rust through warranty and a 1 year workmanship warranty.
Environmental - This limited warranty does not apply in the following cases:
Reaction from chemical agents, fumes, liquids, or solids other than rain falling onto product under warranty
Contact with different soils, ashes, fertilizers or other moisture retaining substances
Failure to remove debris and/or failure to provide free drainage of water including internal condensation from all surfaces of the product Deterioration of the sheet caused by contact with green or wet timber or treated pine
Installations subject to unusually corrosive environments at any time in the future
Storm and tempest or other acts of God

Maintenance

The paint film surface must be washed annually by cleaning with mild detergent and clean neutral water. The paint film surface must not be cleaned with abrasives or chemical cleaners. Any changes or alterations made to the unit once it is installed releases High Quality Steel Structures from any responsibility on the unit such as but limited to the warranty and certification on the unit. Rejection of Order and Cancellation of Contract.
Seller reserves the right, at any time before the installation of the unit, or any 1/2 down payments to confirm scheduled date, to reject this order or cancel this contract by notice in writing, email or telephone call to the buyer. If the materials have not been manufactured for the customer's unit, sellers reserve the right to refund any deposit received from the buyer. buyer agrees that such refund shall be buyer's exclusive remedy for such cancellation.

Legal Authority for Installation

Before installation of the unit, buyer shall locate and mark any underground utilities and obtain every permit or other authorization required for the lawful erection of the unit on that certain site, designated by buyer upon the property specified on the face hereof if buyer fails. To obtain any such required permit or authorization: (i) such failure voids any and all warranties otherwise applicable to the unit, and (ii) buyer shall indemnify and hold seller harmless for all damages or costs, including attorney fees, which seller may incur as a result thereof seller will install the unit or the Site; BUT, if seller delivers the unassembled unit and installation is not completed due to buyer's breach of contract by failure to obtain any required permit or by any other failure to adequately prepare the site, seller may, in its sole discretion, terminate this contract and retain buyer's deposit as liquidated damage for buyer's breach.

Site Preparation

Before delivery, buyer shall designate a site on the property identified as the location on the face hereof and prepare such site for installation of the unit, which preparation shall include making the site leveled and squared (where applicable), removing all electrical wire less than 15 feet above the intended height and perimeter of the unit, removing all underground utilities below the site, and any other improvement reasonably necessary. If the seller determines that the site is not prepared or suitable for installation, the seller may, at its option, terminate this contract or make such further improvements as may be reasonably necessary. If the seller makes further improvements to the site, the buyer agrees to pay the reasonable cost thereof upon completion. All units 12' 30' that have side posts over 14' will require a telescopic forklift that the customer must provide. Such equipment has to be available to the installers when they get to the site. units over 30' wide will require such lift at all side heights, no exceptions. If a unit is delivered to the location and the installer is unable to erect the unit and has to bring it back to the manufacturing facility a restock fee will apply on standard units. If the unit is a custom unit the customer will be responsible to pay it in full and we will not return it to the manufacturing facility. We can drop it off on the customer site. Our pricing includes manufacturing, delivery and installation on leveled surfaces at ground level. If the unit goes on any type of surface above ground level a labor fee will be added for the installers. Customer is responsible to send pictures of such conditions to get a quote on labor cost. If the installers find out on site about it, they will let the customer know about the labor fee and the customer will pay them directly or call in to make that additional labor charge payment (credit card transactions other than the downpayment will have a 3.5% fee). High Quality Steel Structures is not responsible for any cracks that may arise from drilling to secure your unit with the concrete anchors. Concrete, if done correctly and per engineered specs, is made to hold the anchors with no damage to the concrete. Installers must be able to access the work site with the truck and trailer, in the event that the material has to be carried, the installer will charge a labor charge that must be paid to the installer the day of install.

Scheduling Delivery and Installation

After the order is received there will be a call to go over the order with the customer and another one to schedule the unit. The call to schedule installation is typically 3 to 5 days in advance of the installation date. The scheduling department must speak with you to confirm the installation date. buyer may, by written notice received by seller not more than 7 days after seller's acceptance hereon, delay the delivery and installation for up to 4 months or longer with approval from a manager. In no event will the seller be liable for any damage or consequential damages resulting from any delay in delivery or installation of the unit. The average wait time varies depending on the time of the year and weather. The highest lead time we have ranges between 10-12 weeks but it may be extended due to weather and/or unforeseen events. The building will not be discounted or payment refunded in the case of any delays.

Day of Installation

Because this is construction, we cannot provide a specific time when the crew will be at your location. We will be able to tell you if it will be in the A.M. or P.M. There are times when delivery will be early or late depending on the weather, travel/road conditions, or challenges at the previous locations. If for some reason the crew cannot install on the given day you will be rescheduled as a priority on the next available date.

Change Orders

No change in the unit or its specifications is binding on the seller unless requested by the buyer's written change order and approved in writing by the seller. Any change requested by the buyer constitutes the buyer's consent to may result in changes in the Price.

Limited Warranty

As to all units, seller warrants that its installation of the unit will be free of defects in workmanship. As to 12-gauge units and 12-gauge Certified units only, which may contain some 14-gauge non -load-bearing elements, seller warrants the framing elements and roofing material only against rust-through for twenty (20) years from installation, assuming normal user care and maintenance, excluding horizontal roofs longer than 31'. As to 12-gauge Certified units only, the seller warrants that, for twenty (20) years from installation, assuming normal user care and maintenance, the unit will withstand the wind and snow loads specified on the engineer-certified drawings of the unit furnished at the time of installation. Any alteration or abuse of the unit shall void all such limited warranties. seller's LIABILITY FOR ANY BREACH OF WARRANTY IS LIMITED TO REPAIR OR REPLACEMENT, AT seller's OPTION, OF THE unit. seller MAKES NO WARRANTIES, EXPRESS OR IMPLIED, OTHER THAN THOSE EXPRESSLY STATED HEREIN. seller MAKES NO WARRANTY OF MERCHANTABILITY OR FITNESS FOR ANY PARTICULAR PURPOSE AND SHALL NOT BE LIABLE FOR ANY INCIDENTAL OR CONSEQUENTIAL DAMAGES, INCLUDING BUT NOT LIMITED TO DAMAGE TO ANY OTHER PROPERTY.

Payment Terms & Miscellaneous

Buyer agrees to pay the price, including any increase for any Change to the Order, in full at the time of installation. If any payment tendered by the buyer is dishonored for any reason, the buyer agrees that the balance due shall after that bear interest at one and one-half percent (1.5%) per month on the retail price and any other applicable fees. If seller refers collection hereunder to any attorney, buyer agrees to pay seller's reasonable attorney fees and expenses. This Agreement is governed by the laws of North Carolina. No civil action or other legal proceeding arising under this Agreement or related to the unit shall be brought against the seller other than in a court of general jurisdiction in the State of North Carolina for more than one (1) year after the buyer knows or should have known of the basis of the claim. The term "buyer" includes persons named as such on the face hereof, their heirs, successors, and assignees, and shall include singular, masculine, feminine or neuter as required by the context. This Agreement, including only the face and reverse hereof and an engineer-certified drawing of the unit, if such drawing is furnished by seller, constitutes the complete agreement of the parties, and all prior descriptions, representations, negotiations or agreements are merged herein and superseded at this moment. buyer agrees to have the site ready within 6 months of the date on the contract to ensure no price changes. After 6 months if there is a price increase of materials, the customer will have to pay the current retail price of the unit. Limited time promotions or exceptions will not apply if the site is not ready within those 6 months. If the customer is not ready for installation within 12 months, High Quality Steel Structures, will not be obligated to return any funds, deposits or partial payments back to the customer.

_____ _____

CUSTOMER'S NAME **DATE**

Levelled Land Agreement

High Quality Steel Structures greatly appreciates your purchase, however it is imperative that your ground is professionally levelled before the unit can be installed. High Quality Steel Structures & our subcontracted installation crews that we work with will not be able to install the structure if any of the following are indicated at the construction site, please contact your High Quality Steel Structures's Building Specialist.

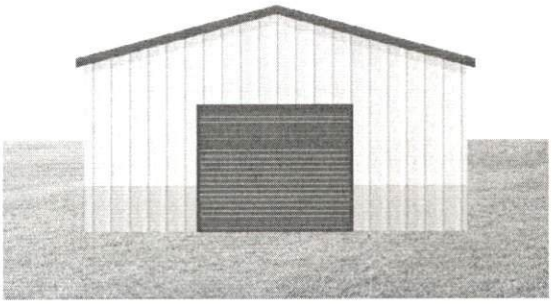

Wall Installation - 3 Feet Maximum

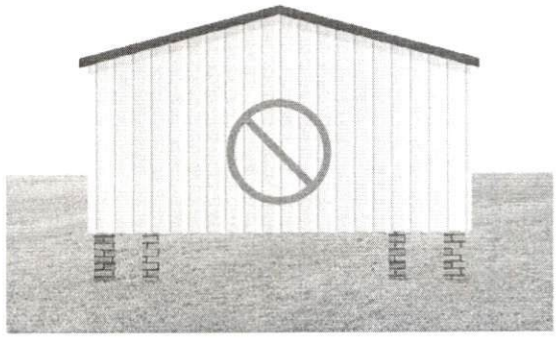

No Installs on Stacked Blocks

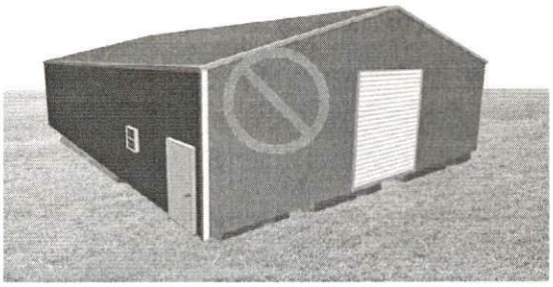

No Installs on Floating Docks

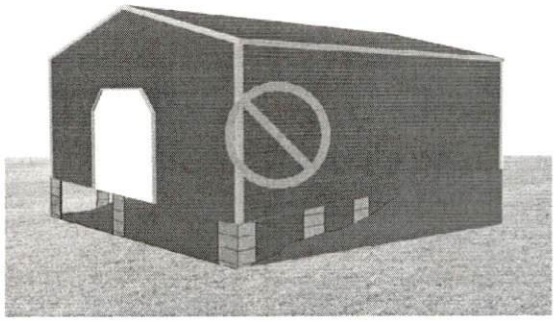

No Installs on Unlevel Land

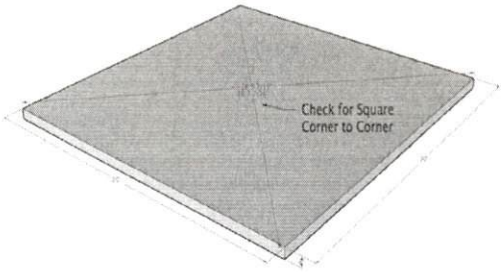

Slab Must Be Level & Square

No Installs on Slopes Over 12"

By signing below the buyer ensures High Quality Steel Structures that the ground is professionally level while also acknowledging that if the installation crew is unable to install the structure due to an unlevel foundation there will be a return trip fee along with a restock fee that must be paid before returning to the site.

Thank you for your understanding and once again we appreciate your business.

BUILDING VIEW

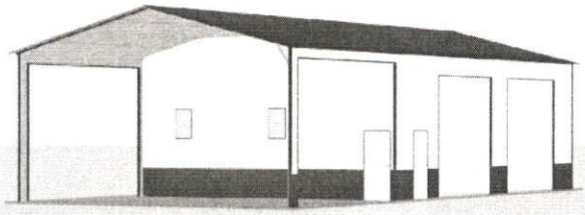

FRONT

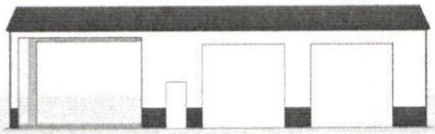

RIGHT

BUILDING VIEW

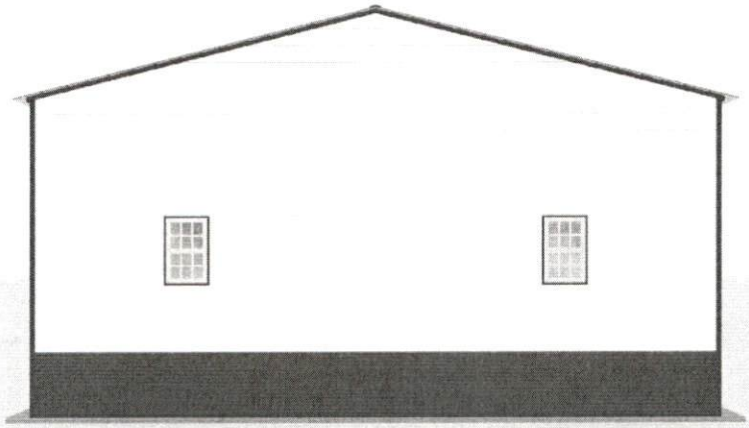

BACK

LEFT

2D DRAWING-1

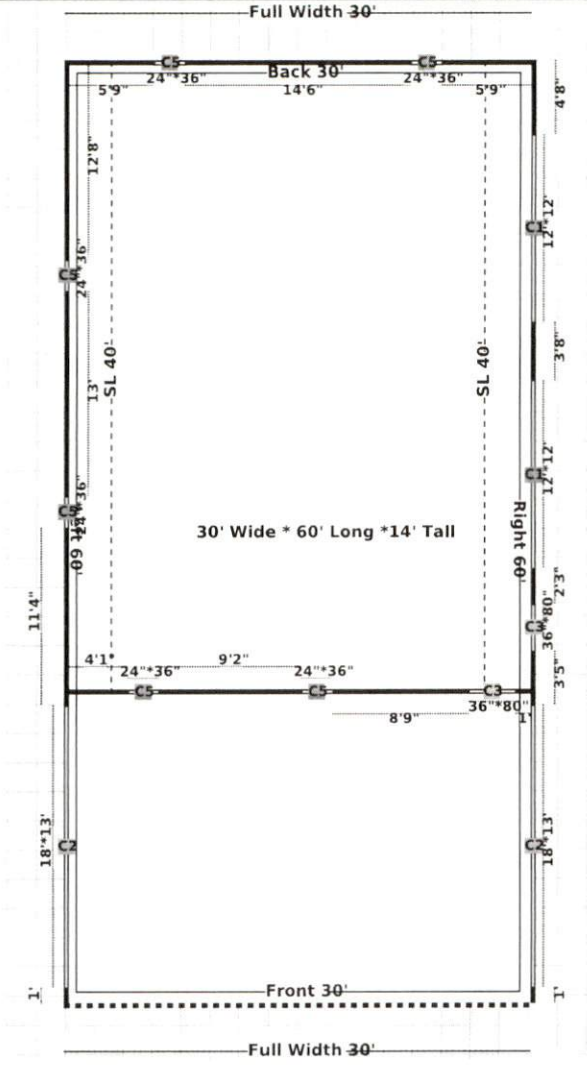

LEGENDS

C1 Garage Door | C2 Garage Door Frameout | C3 Walk in Door | C4 Walk in Door Frameout | C5 Windows | C6 Windows Frameout | C7 Open Wall

C8 Close Wall | C9 Distance | C10 Storage Length (Utility) | C Cupola

Due to Material Price Fluctuations, Price Will Only Be Locked In For 4 Months From The Date The Deposit Has Been Paid.

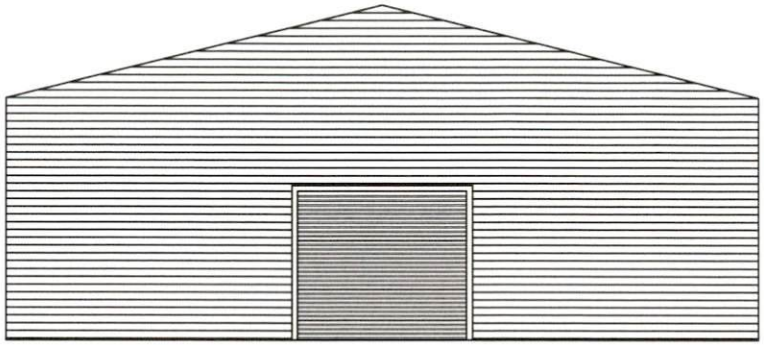

ENCLOSED GABLE END BUILDING

MAXIMUM 30'-0" WIDE 20'-0" EAVE HIGHT BOX FRAME / UP TO 145 M.P.H. WIND ZONE - 35 P.S.F SNOW LOAD FOR CARPORTS & GARGES ONLY

FOR

HIGH QUALITY STEEL STRUCTURE
2267 N Andy Griffith Parkway, Mt Airy, NC 27030
#366-600-4833

HighQuality STEEL STRUCTURES

THIS DRAWING IS PRELIMINARY UNTIL SIGNED AND SEALED BY THE LICENSED PROFESSIONAL NOTED BELOW.

PROFESSIONAL SEAL

DESIGN PROFESSIONAL
DOTec Engineering
118 N 2nd St,
St. Charles, MO 63301
Ph 636-724-9872
Fx 636-385-5059
WWW.DOTECENGINEERING.COM
INFO@DOTECENGINEERING.COM

DESIGN	DATE	DESCRIPTION

SHEET NAME: Cover

ISSUE DATE: 04/15/2025

CLIENT: HIGH QUALITY STEEL STRUCTURES

ADDRESS: 2267 N Andy Griffith Parkway, Mt Airy, NC 27030

SHEET NUMBER: S0

PROJECT NUMBER: #0250402

DRAWN BY: HWO

CHECKED BY: MKC

NOTE: THIS DRAWINGS ARE VALID FOR (1) CALENDER YEAR AFTER THE ISSUE DATE LISTED ON THE SHEET.

ALABAMA LICENSED No. 33392 PROFESSIONAL ENGINEER ILDEFONSO GONZALEZ 04/15/2025 DOCUMENTS DESIGNED AND DRAWN TO MEET THE 2021 BUILDING CODE OF ALABAMA (2021 IBC)	NORTH CAROLINA PROFESSIONAL SEAL 34638 ENGINEER ILDEFONSO GONZALEZ 04/15/2025 DOCUMENTS DESIGNED AND DRAWN TO MEET THE 2018 BUILDING CODE OF North Carolina (2018 IBC)	SOUTH CAROLINA LICENSED PROFESSIONAL ENGINEER No. 26633 ILDEFONSO GONZALEZ 04/15/2025 DOCUMENTS DESIGNED AND DRAWN TO MEET THE 2021 IBC	ILDEFONSO GONZALEZ REGISTERED ENGINEER AGRICULTURE COMMERCE No. 113257 STATE OF TENNESSEE 04/15/2025 DOCUMENTS DESIGNED AND DRAWN TO MEET THE 2018 IBC	GEORGIA REGISTERED No. PE36390 PROFESSIONAL ENGINEER ILDEFONSO GONZALEZ 04/15/2025 DOCUMENTS DESIGNED AND DRAWN TO MEET THE 2018 IBC
STATE OF KENTUCKY ILDEFONSO GONZALEZ 27133 LICENSED PROFESSIONAL ENGINEER 04/15/2025 DOCUMENTS DESIGNED AND DRAWN TO MEET THE 2018 KENTUCKY BUILDING CODE (2015 IBC)	ILDEFONSO GONZALEZ REGISTERED 20072 STATE OF WEST VIRGINIA PROFESSIONAL ENGINEER 04/15/2025 DOCUMENTS DESIGNED AND DRAWN TO MEET THE 2018 IBC	COMMONWEALTH OF VIRGINIA ILDEFONSO GONZALEZ Lic. No. 402051540 PROFESSIONAL ENGINEER 04/15/2025 DOCUMENTS DESIGNED AND DRAWN TO MEET THE 2021 IBC	STATE OF NEW JERSEY ILDEFONSO GONZALEZ No. 24GE04741700 LICENSED PROFESSIONAL ENGINEER 04/15/2025 DOCUMENTS DESIGNED AND DRAWN TO MEET THE 2021 BUILDING CODE OF NEW JERSEY (2021 IBC)	STATE OF NEW YORK ILDEFONSO GONZALEZ 085758 LICENSED PROFESSIONAL ENGINEER 04/15/2025 DOCUMENTS DESIGNED AND DRAWN TO MEET THE 2018 IBC
STATE OF OHIO ILDEFONSO GONZALEZ E-74176 REGISTERED PROFESSIONAL ENGINEER 04/15/2025 DOCUMENTS DESIGNED AND DRAWN TO MEET THE 2021 IBC	ILDEFONSO GONZALEZ LICENSE No. 18886 DELAWARE PROFESSIONAL ENGINEER 04/15/2025 DOCUMENTS DESIGNED AND DRAWN TO MEET THE 2018 IBC	COMMONWEALTH OF PENNSYLVANIA REGISTERED PROFESSIONAL ILDEFONSO GONZALEZ ENGINEER PE075686 04/15/2025 DOCUMENTS DESIGNED AND DRAWN TO MEET THE 2018 IBC	STATE OF MARYLAND ILDEFONSO GONZALEZ No. 38651 PROFESSIONAL ENGINEER 04/15/2025 DOCUMENTS DESIGNED AND DRAWN TO MEET THE 2021 BUILDING CODE OF MARYLAND (2021 IBC)	ILDEFONSO GONZALEZ LICENSED PROFESSIONAL ENGINEER 18514 STATE OF MISSISSIPPI 04/15/2025 DOCUMENTS DESIGNED AND DRAWN TO MEET THE 2018 IBC
STATE OF LOUISIANA ILDEFONSO GONZALEZ License No. 0037839 PROFESSIONAL ENGINEER IN CIVIL ENGINEERING 04/15/2025 DOCUMENTS DESIGNED AND DRAWN TO MEET THE 2021 BUILDING CODE OF LOUISIANA (2021 IBC)	STATE OF TEXAS ILDEFONSO GONZALEZ 110703 LICENSED PROFESSIONAL ENGINEER 04/15/2025 DOCUMENTS DESIGNED AND DRAWN TO MEET THE 2021 BUILDING CODE OF TEXAS (2021 IBC)	ILDEFONZO GONZALEZ REGISTERED PE11011575 STATE OF INDIANA PROFESSIONAL ENGINEER 04/15/2025 DOCUMENTS DESIGNED AND DRAWN TO MEET THE BUILDING CODE OF INDIANA (2012 IBC)		

NOTE: THIS DRAWINGS ARE VALID FOR (1) CALENDER YEAR AFTER THE ISSUE DATE LISTED ON THE SHEET.

THIS DRAWING IS PRELIMINARY UNTIL SIGNED AND SEALED BY THE LICENSED PROFESSIONAL NOTED BELOW.

PROFESSIONAL SEAL

DESIGN PROFESSIONAL
DOTec Engineering
118 N 2nd St,
St. Charles, MO 63301
Ph 636-724-9872
Fx 636-385-5059
WWW.DOTECENGINEERING.COM
INFO@DOTECENGINEERING.COM

DESCRIPTION	DATE	BY

SHEET NAME: Sealing

ISSUE DATE: 04/15/2025

CLIENT: HIGH QUALITY STEEL STRUCTURES

ADDRESS: 2267 N Andy Griffith Parkway, Mt Airy, NC 27030

SHEET NUMBER: S1

PROJECT NUMBER: 2025-0027

DRAWN BY: HMO

CHECKED BY: MRC

SHEET INDEX

THIS DRAWING IS PRELIMINARY UNTIL SIGNED AND SEALED BY THE LICENSED PROFESSIONAL NOTED BELOW.

PROFESSIONAL SEAL

DESIGN PROFESSIONAL
DOTec Engineering
118 N 2nd St.
St. Charles, MO 63301
Ph 636-724-9872
Fx 636-385-5059
WWW.DOTECENGINEERING.COM
INFO@DOTECENGINEERING.COM

DESCRIPTION	DATE	BY

SHEET NAME: Sheet Index

ISSUE DATE: 04/15/2025

CLIENT: HIGH QUALITY STEEL STRUCTURES

ADDRESS: 2267 N Andy Griffith Parkway, Mt Ary, NC 27030

SHEET NUMBER: S2

PROJECT NUMBER: #82561027

DRAWN BY: HWD

CHECKED BY: MRZ

NOTE: THIS DRAWINGS ARE VALID FOR (1) CALENDER YEAR AFTER THE ISSUE DATE LISTED ON THE SHEET.

DESIGN LOADS:

IMPORTANCE FACTORS	WIND	(1w) 1.00	
	SNOW	(1s) 1.00	
	SEISMIC	(1e) 1.00	
DEAD LOADS	ROOF	13	P.S.F.
	ROOF COLLATERAL	0	P.S.F.
LIVE LOADS	ROOF	20	P.S.F.

GROUND SNOW LOAD: 35/43.5 P.S.F. * DRIFT LOAD HAS NOT BEEN CALCULATED

WIND LOAD: BASIC WIND SPEED 145 M.P.H. (ASCE 7-16)
EXPOSURE CATAGORY B

SEISMIC DESIGN CATAGORY ☐ A ☐ B ☒ C ☐ D

PROVIDE THE FOLLOWING SEISMIC DESIGN PARAMETERS:

OCCUPANCY CATEGORY I/II *NOT FOR SLEEPING QUARTERS

SPECTRAL RESPONSE ACCELERATION Ss 20.5 %g S1 8.8 %g

SITE CLASSIFICATION D ☐ FIELD TEST ☐ PRESUMPTIVE ☐ HISTORICAL DATA

BASIC STRUCTURAL SYSTEM (CHECK ONE)

.	BEARING WALL	.	DUAL W/ SPECTRAL MOMENT FRAME
X	BUILDING FRAME	.	DUAL W/ INTERMEDIATE R/C OR SPECIAL STEEL
.	MOMENT FRAME	.	INVERTED PENDULUM

ANALYSIS PROCEDURE . SIMPLIFIED X EQUIVALANT LATERAL FORCE . MODAL

LATERAL DESIGN CONTROL . EARTHQUAKE X WIND

SOIL BEARING CAPACITIES:
PRESUMPTIVE BEARING CAPACITIES: 2,000 P.S.F.

GENERAL NOTES:

1. MAX. FRAME SPACING SHALL BE 48" oc FOR GROUND SNOW LOAD OF 35 < Pg ≤ 43.5 Psf.
2. MAX. FRAME SPACING SHALL BE 60" oc FOR GROUND SNOW LOAD OF Pg ≤ 35 Psf.
3. MAX. END-WALL COLUMN SPACING SHALL BE 60" oc UNLESS NOTED OTHERWISE.
4. TUBE MATERIAL SHALL BE 2-1/2x2-1/2x14ga. 50 ksi MIN. UNLESS NOTED OTHERWISE.
5. ALL FASTENERS SHALL BE (2) #12 SELF TAPPING AT 9" o.c UNLESS NOTED OTHERWISE.
6. 2,000 Psf ASSUMED BEARING CAPACITY FOR FOUNDATION UNLESS NOTED OTHERWISE.

THIS DRAWING IS PRELIMINARY UNTIL SIGNED AND SEALED BY THE LICENSED PROFESSIONAL NOTED BELOW
PROFESSIONAL SEAL

DESIGN PROFESSIONAL
DOTec Engineering
118 N 2nd St,
St. Charles, MO 63301
Ph 636-724-9872
Fx 636-385-5059
WWW.DOTECENGINEERING.COM
INFO@DOTECENGINEERING.COM

SHEET NAME
Sheet Index

ISSUE DATE

CLIENT
HIGH QUALITY STEEL STRUCTURES

ADDRESS
2267 N Andy Griffith Parkway,
Mt Airy, NC 27030

SHEET NUMBER
S3

PROJECT NUMBER

DRAWN BY

CHECKED BY

NOTE: THIS DRAWINGS ARE VALID FOR (1) CALENDER YEAR AFTER THE ISSUE DATE LISTED ON THE SHEET.

BOX EVE FRAME RAFTER STURCTURE

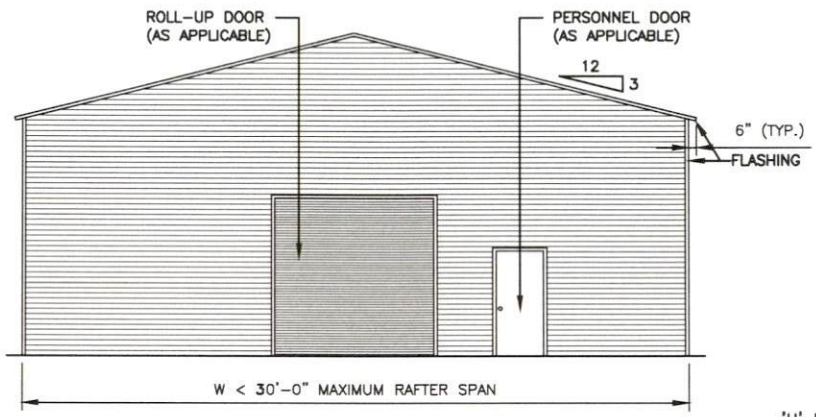

TYPICAL END ELEVATION

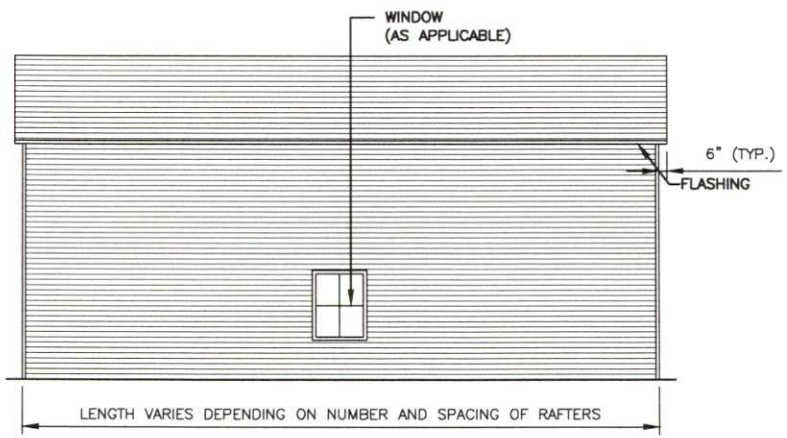

TYPICAL SIDE ELEVATION

'U' BRACE TRUSS TIE – NOTE:
6'-0" BRACE FOR 21'-24' BUILDING WIDTH
20' TUBE TRUSS TIE (AS SHOWN) FOR 25'-30'

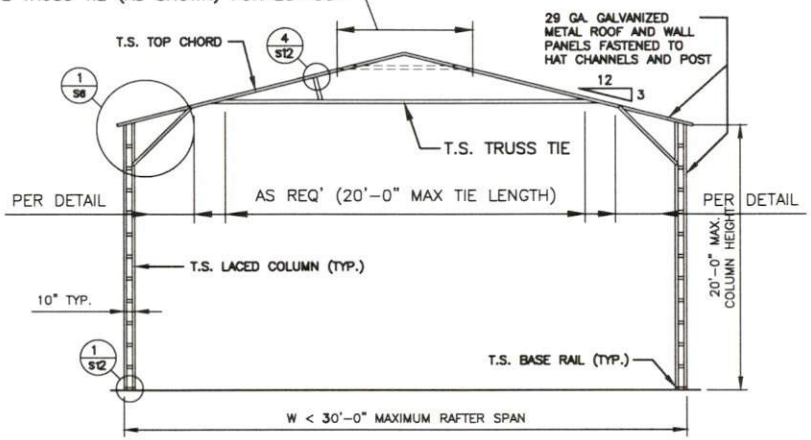

TYPICAL RAFTER / COLUMN FRAME SECTION

'U' BRACE TRUSS TIE – NOTE:
6'-0" BRACE FOR 21'-24' BUILDING WIDTH
20' TUBE TRUSS TIE (AS SHOWN) FOR 25'-30'

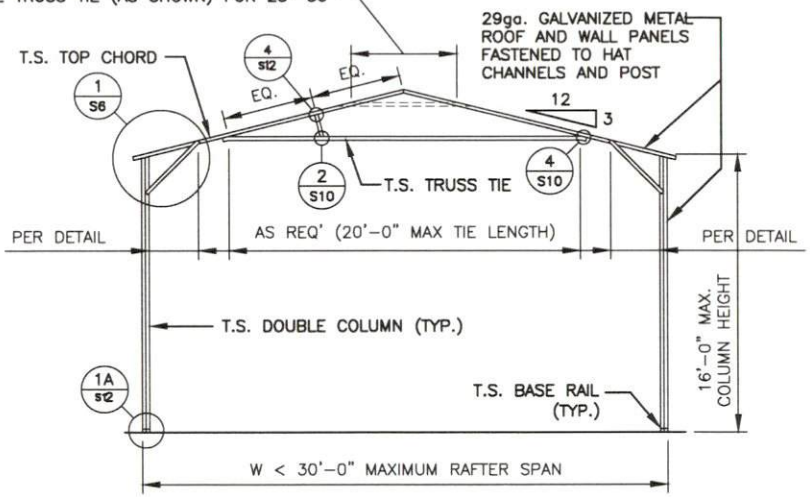

TYPICAL RAFTER / COLUMN FRAME SECTION

THIS DRAWING IS PRELIMINARY UNTIL SIGNED AND SEALED BY THE LICENSED PROFESSIONAL NOTED BELOW.

PROFESSIONAL SEAL

DESIGN PROFESSIONAL
DOTec Engineering
118 N 2nd St.
St. Charles, MO 63301
Ph 636-724-9872
Fx 636-385-5059
WWW.DOTECENGINEERING.COM
INFO@DOTECENGINEERING.COM

ISSUE	DATE	DESCRIPTION
XXX	XXX	

SHEET NAME: ELEVATIONS& SECTIONS

ISSUE DATE: 04/15/2025

CLIENT: HIGH QUALITY STEEL STRUCTURES

ADDRESS: 2267 N Andy Griffith Parkway, Mt Airy, NC 27030

SHEET NUMBER: S4

PROJECT NUMBER: 8025M027

DRAWN BY: HMO

CHECKED BY: MRC

NOTE: THIS DRAWINGS ARE VALID FOR (1) CALENDER YEAR AFTER THE ISSUE DATE LISTED ON THE SHEET.

BOX EVE FRAME RAFTER STURCTURE

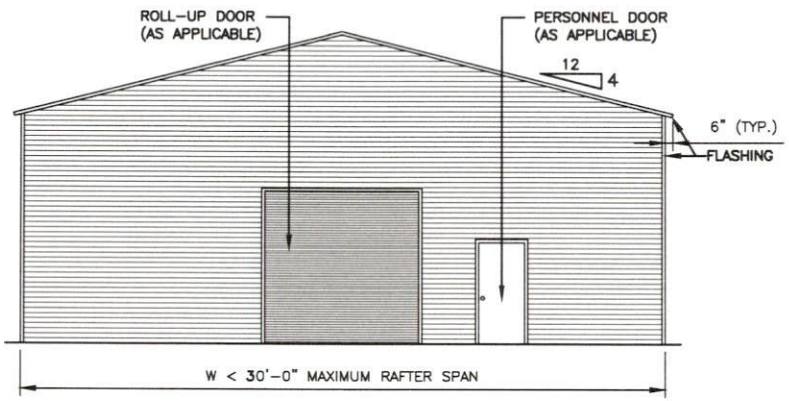

TYPICAL END ELEVATION

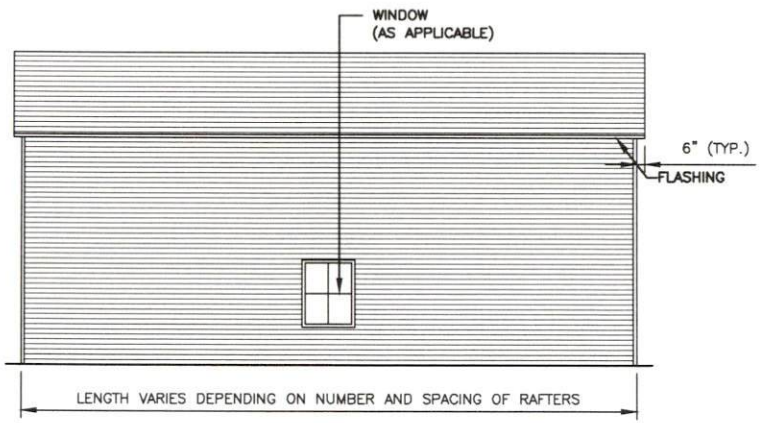

TYPICAL SIDE ELEVATION

'U' BRACE TRUSS TIE - NOTE:
2'-0" BRACE FOR 12'-18' BUILDING WIDTH
4'-0" BRACE FOR 19'-20' BUILDING WIDTH
6'-0" BRACE FOR 21'-24' BUILDING WIDTH
20'-0" BRACE FOR 25'-30' BUILDING WIDTH

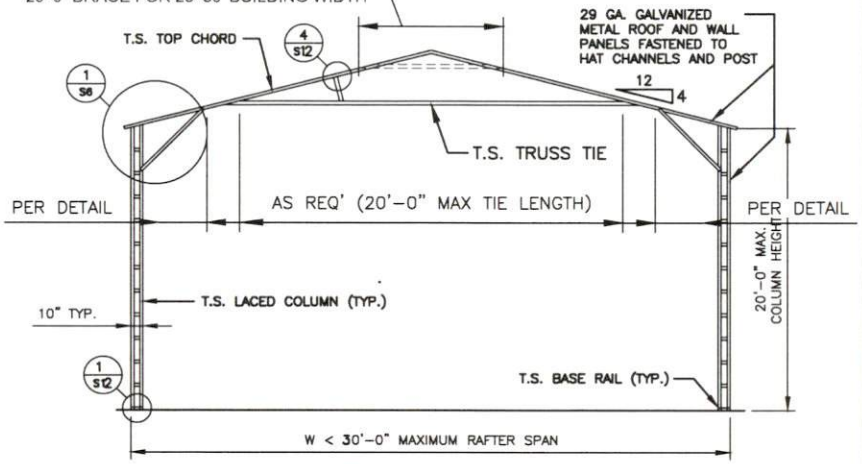

TYPICAL RAFTER / COLUMN FRAME SECTION

'U' BRACE TRUSS TIE - NOTE:
2'-0" BRACE FOR 12'-18' BUILDING WIDTH
4'-0" BRACE FOR 19'-20' BUILDING WIDTH
6'-0" BRACE FOR 21'-24' BUILDING WIDTH
20'-0" BRACE FOR 25'-30' BUILDING WIDTH

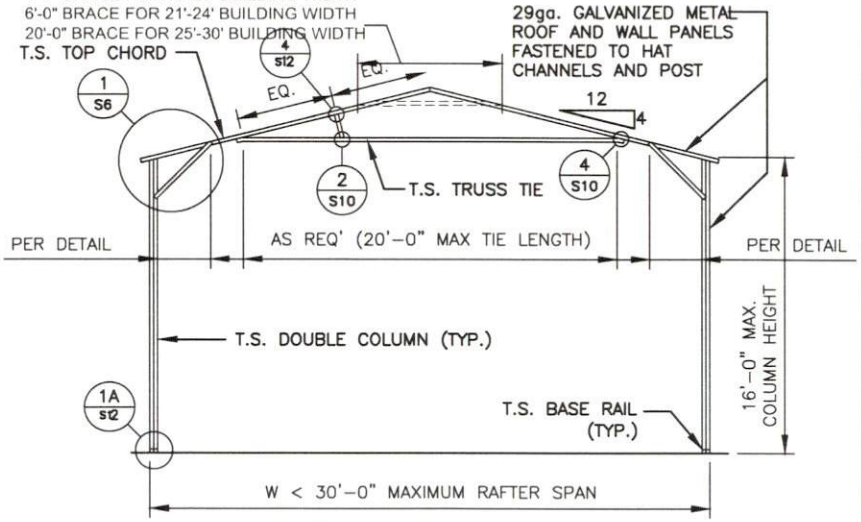

TYPICAL RAFTER / COLUMN FRAME SECTION

THIS DRAWING IS PRELIMINARY UNTIL SIGNED AND SEALED BY THE LICENSED PROFESSIONAL NOTED BELOW

PROFESSIONAL SEAL

DESIGN PROFESSIONAL
DOTec Engineering
118 N 2nd St,
St. Charles, MO 63301
Ph 636-724-9872
Fx 636-385-5059
WWW.DOTECENGINEERING.COM
INFO@DOTECENGINEERING.COM

DESIGNER	DATE	DESCRIPTION

SHEET NAME: ELEVATIONS& SECTIONS

ISSUE DATE: 04/15/2026

CLIENT: HIGH QUALITY STEEL STRUCTURES

ADDRESS: 2267 N Andy Griffith Parkway, Mt Airy, NC 27030

SHEET NUMBER: S4A

PROJECT NUMBER: 2026-027

DRAWN BY: HMD

CHECKED BY: MRZ

NOTE: THIS DRAWINGS ARE VALID FOR (1) CALENDER YEAR AFTER THE ISSUE DATE LISTED ON THE SHEET.

BOX EVE FRAME RAFTER STURCTURE

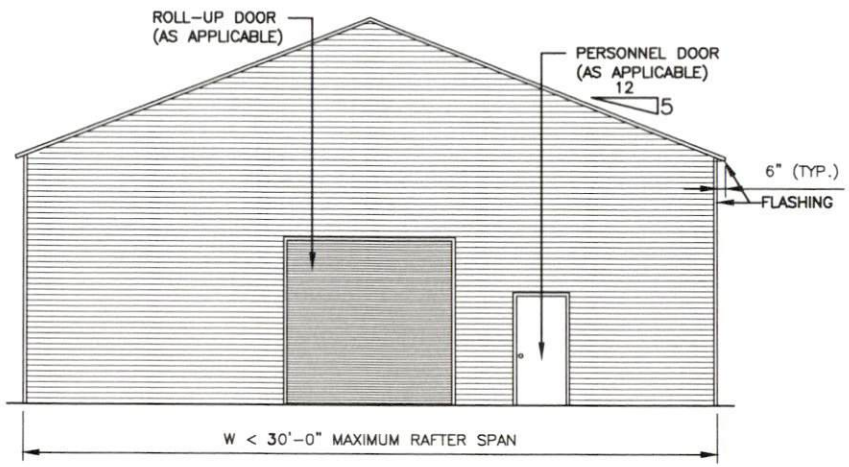

TYPICAL END ELEVATION

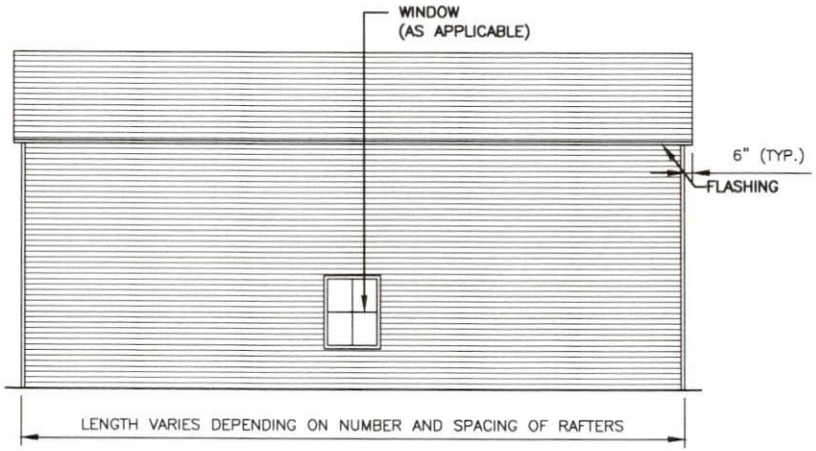

TYPICAL SIDE ELEVATION

'U' BRACE TRUSS TIE - NOTE:
2'-0" BRACE FOR 12'-18' BUILDING WIDTH
4'-0" BRACE FOR 19'-20' BUILDING WIDTH
6'-0" BRACE FOR 21'-24' BUILDING WIDTH
20'-0" BRACE FOR 25'-30' BUILDING WIDTH

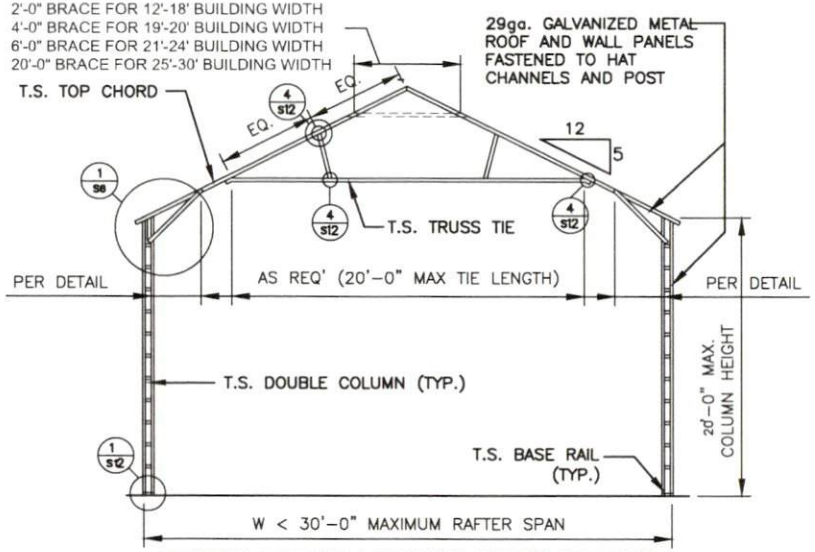

TYPICAL RAFTER / COLUMN FRAME SECTION

'U' BRACE TRUSS TIE - NOTE:
2'-0" BRACE FOR 12'-18' BUILDING WIDTH
4'-0" BRACE FOR 19'-20' BUILDING WIDTH
6'-0" BRACE FOR 21'-24' BUILDING WIDTH
20'-0" BRACE FOR 25'-30' BUILDING WIDTH

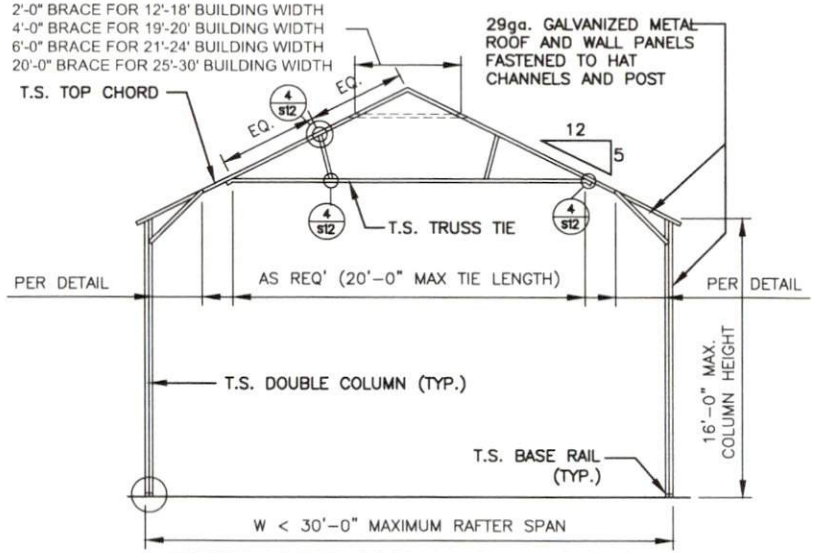

TYPICAL RAFTER / COLUMN FRAME SECTION

THIS DRAWING IS PRELIMINARY UNTIL SIGNED AND SEALED BY THE LICENSED PROFESSIONAL NOTED BELOW

PROFESSIONAL SEAL

DESIGN PROFESSIONAL
DOTec Engineering
118 N 2nd St,
St. Charles, MO 63301
Ph 636-724-9872
Fx 636-385-5059
WWW.DOTECENGINEERING.COM
INFO@DOTECENGINEERING.COM

ISSUE	DATE	DESCRIPTION

SHEET NAME
ELEVATIONS& SECTIONS

ISSUE DATE 04-15-2025

HIGH QUALITY STEEL STRUCTURES

2267 N Andy Griffith Parkway,
Mt Airy, NC 27030

SHEET NUMBER
S4B

PROJECT NUMBER
DRAWN BY HMG
CHECKED BY MRJ

NOTE: THIS DRAWINGS ARE VALID FOR (1) CALENDER YEAR AFTER THE ISSUE DATE LISTED ON THE SHEET.

BOX EVE FRAME RAFTER STURCTURE

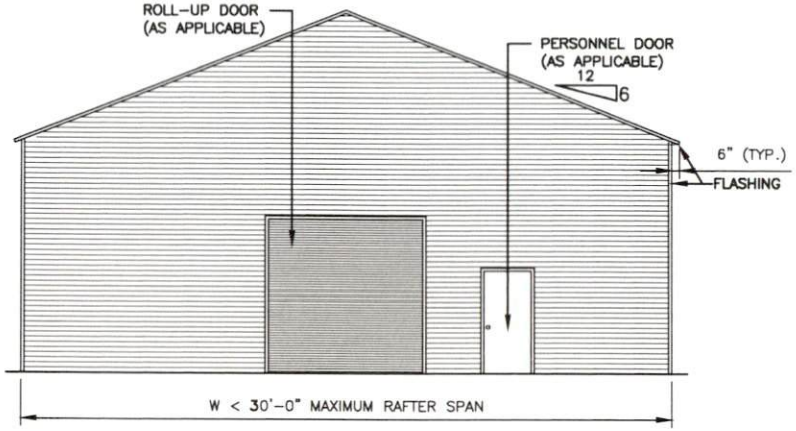

TYPICAL END ELEVATION

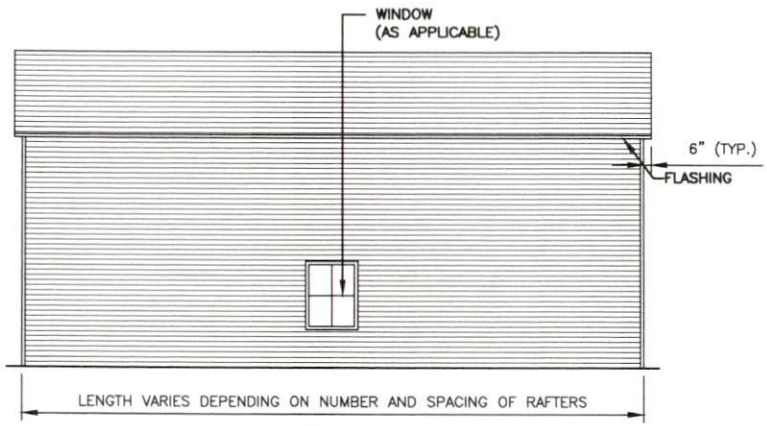

TYPICAL SIDE ELEVATION

'U' BRACE TRUSS TIE - NOTE:
2'-0" BRACE FOR 12'-18' BUILDING WIDTH
4'-0" BRACE FOR 19'-20' BUILDING WIDTH
6'-0" BRACE FOR 21'-24' BUILDING WIDTH
20'-0" BRACE FOR 25'-30' BUILDING WIDTH

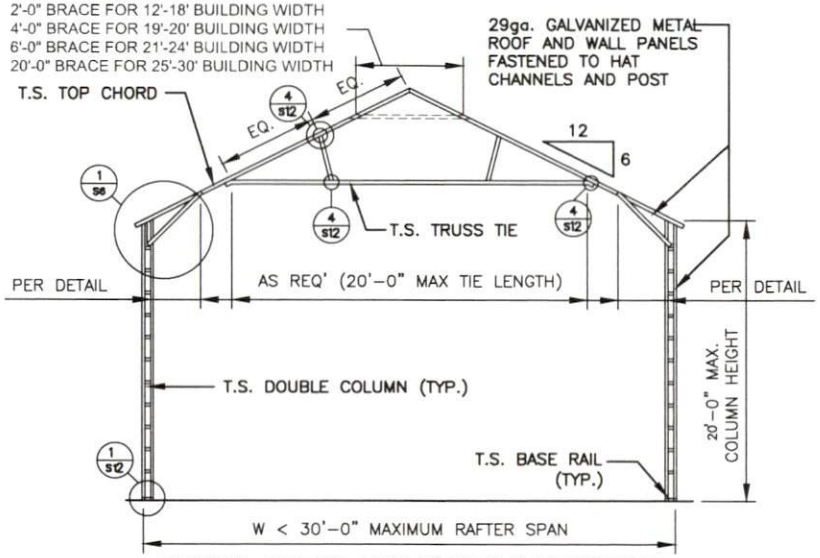

TYPICAL RAFTER / COLUMN FRAME SECTION

'U' BRACE TRUSS TIE - NOTE:
2'-0" BRACE FOR 12'-18' BUILDING WIDTH
4'-0" BRACE FOR 19'-20' BUILDING WIDTH
6'-0" BRACE FOR 21'-24' BUILDING WIDTH
20'-0" BRACE FOR 25'-30' BUILDING WIDTH

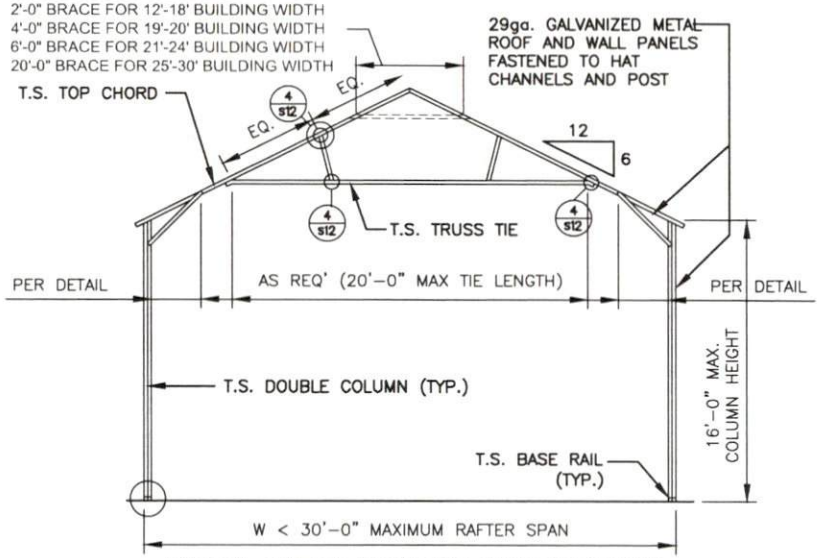

TYPICAL RAFTER / COLUMN FRAME SECTION

THIS DRAWING IS PRELIMINARY UNTIL SIGNED AND SEALED BY THE LICENSED PROFESSIONAL NOTED BELOW.
PROFESSIONAL SEAL

DESIGN PROFESSIONAL
DOTec Engineering
118 N 2nd St.
St. Charles, MO 63301
Ph 636-724-9872
Fx 636-385-5059
WWW.DOTECENGINEERING.COM
INFO@DOTECENGINEERING.COM

DESCRIPTION	DATE	BY

SHEET NAME: ELEVATIONS& SECTIONS

ISSUE DATE: 04-16-2026

CLIENT: HIGH QUALITY STEEL STRUCTURES

ADDRESS: 2267 N Andy Griffith Parkway, Mt Ary, NC 27030

SHEET NUMBER: S4C

PROJECT NUMBER: 6B2H4027

DRAWN BY: HMD

CHECKED BY: MRZ

NOTE: THIS DRAWINGS ARE VALID FOR (1) CALENDER YEAR AFTER THE ISSUE DATE LISTED ON THE SHEET.

'U' BRACE TRUSS TIE - NOTE:
2'-0" BRACE FOR 12'-18' BUILDING WIDTH
4'-0" BRACE FOR 19'-20' BUILDING WIDTH
6'-0" BRACE FOR 21'-24' BUILDING WIDTH
20'-0" BRACE FOR 25'-30' BUILDING WIDTH

NOTE:
H.S.S. 2-1/2"x2-1/2"x14ga. OR 2-1/4"x2-1/4"x12 ga.
MATERIAL MAY BE USED FOR TRUSS METAL.

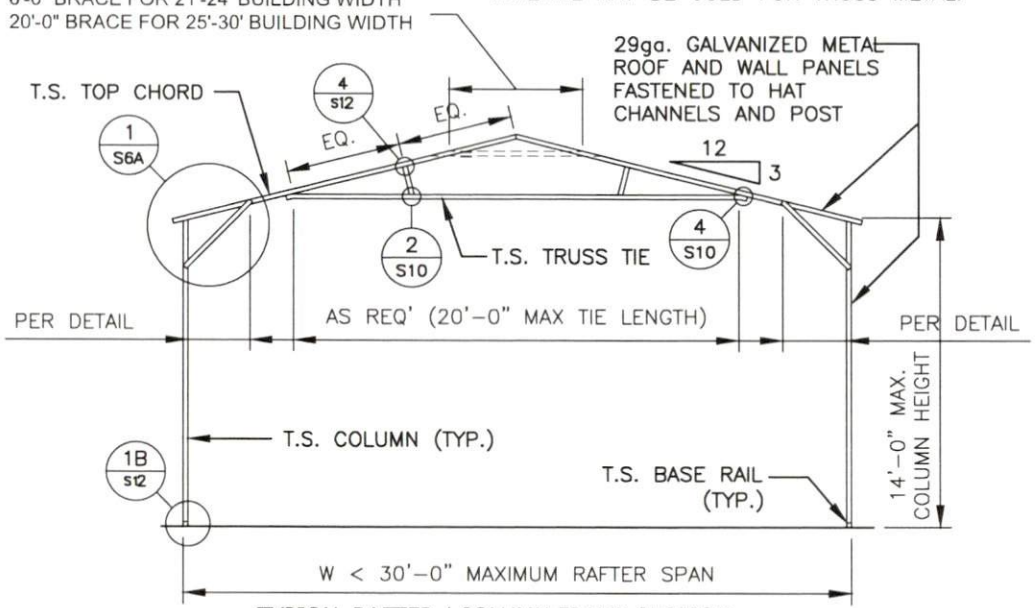

TYPICAL RAFTER / COLUMN FRAME SECTION

NOTE:
H.S.S. 2-1/2"x2-1/2"x14ga. OR 2-1/4"x2-1/4"x12ga. MATERIAL MAY BE USED FOR TRUSS METAL.

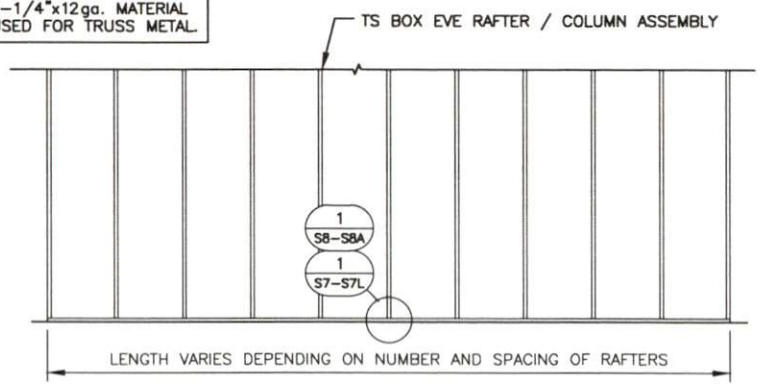

TYPICAL RAFTER / COLUMN SIDE FRAME SECTION

NOTE: THIS DRAWINGS ARE VALID FOR (1) CALENDER YEAR AFTER THE ISSUE DATE LISTED ON THE SHEET.

THIS DRAWING IS PRELIMINARY UNTIL SIGNED AND SEALED BY THE LICENSED PROFESSIONAL NOTED BELOW.
PROFESSIONAL SEAL

DESIGN PROFESSIONAL
DOTec Engineering
118 N 2nd St,
St. Charles, MO 63301
Ph 636-724-9872
Fx 636-385-5059
WWW.DOTECENGINEERING.COM
INFO@DOTECENGINEERING.COM

ISSUE	DATE	DESCRIPTION

SHEET NAME: TYPICAL SECTIONS
ISSUE DATE: 04/15/2025

CLIENT: HIGH QUALITY STEEL STRUCTURES
ADDRESS: 2267 N Andy Griffith Parkway, Mt Airy, NC 27030

SHEET NUMBER: S5
PROJECT NUMBER: #025H-002
DRAWN BY: HWD
CHECKED BY: MRZ

'U' BRACE TRUSS TIE - NOTE:
2'-0" BRACE FOR 12'-18' BUILDING WIDTH
4'-0" BRACE FOR 19'-20' BUILDING WIDTH
6'-0" BRACE FOR 21'-24' BUILDING WIDTH
20'-0" BRACE FOR 25'-30' BUILDING WIDTH

NOTE:
H.S.S. 2-1/2"x2-1/2"x14ga. OR 2-1/4"x2-1/4"x
MATERIAL MAY BE USED FOR TRUSS METAL.

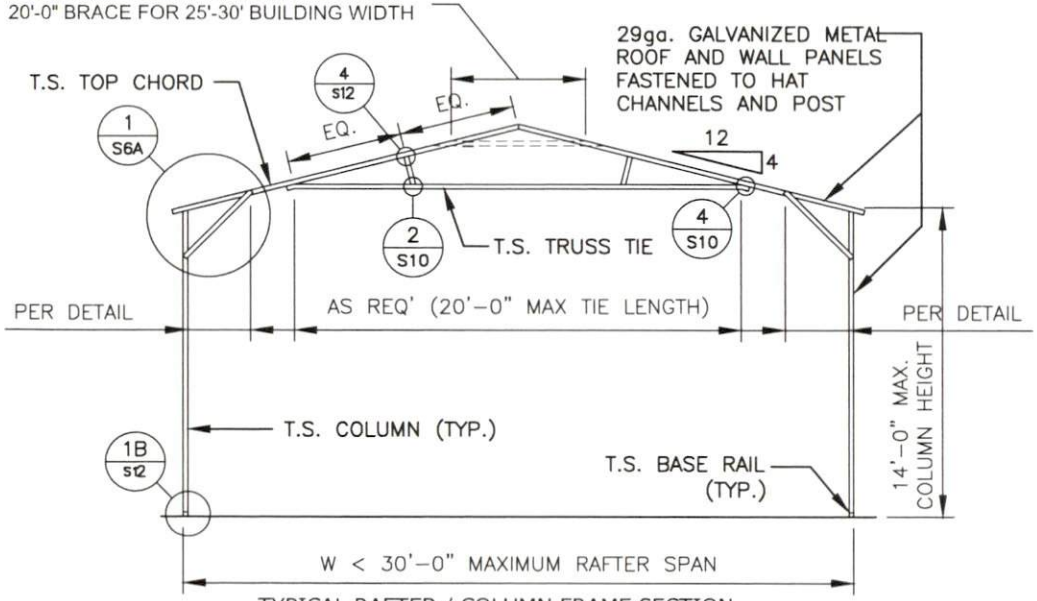

TYPICAL RAFTER / COLUMN FRAME SECTION

NOTE:
H.S.S. 2-1/2"x2-1/2"x14ga. OR 2-1/4"x2-1/4"x14ga. MATERIAL MAY BE USED FOR TRUSS METAL.

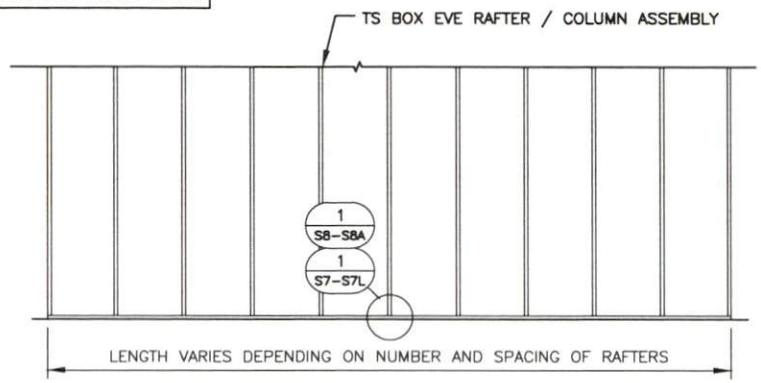

TYPICAL RAFTER / COLUMN SIDE FRAME SECTION

THIS DRAWING IS PRELIMINARY UNTIL SIGNED AND SEALED BY THE LICENSED PROFESSIONAL NOTED BELOW

PROFESSIONAL SEAL

DESIGN PROFESSIONAL
DOTec Engineering
118 N 2nd St,
St. Charles, MO 63301
Ph 636-724-9872
Fx 636-385-5059
WWW.DOTECENGINEERING.COM
INFO@DOTECENGINEERING.COM

DESIGN	DATE	DR.	DATE	DESCRIPTION

SHEET NAME: TYPICAL SECTIONS

ISSUE DATE: 06/15/2026

CLIENT: HIGH QUALITY STEEL STRUCTURES

ADDRESS: 2267 N Andy Griffith Parkway, Mt Airy, NC 27030

SHEET NUMBER: S5A

PROJECT NUMBER: 2026-0101

DRAWN BY: HMD

CHECKED BY: MRC

NOTE: THIS DRAWINGS ARE VALID FOR (1) CALENDER YEAR AFTER THE ISSUE DATE LISTED ON THE SHEET.

'U' BRACE TRUSS TIE - NOTE:
2'-0" BRACE FOR 12'-18' BUILDING WIDTH
4'-0" BRACE FOR 19'-20' BUILDING WIDTH
6'-0" BRACE FOR 21'-24' BUILDING WIDTH
20'-0" BRACE FOR 25'-30' BUILDING WIDTH

NOTE:
H.S.S. 2-1/2"x2-1/2"x14ga. OR 2-1/4"x2-1/4"x14ga. MATERIAL MAY BE USED FOR TRUSS METAL.

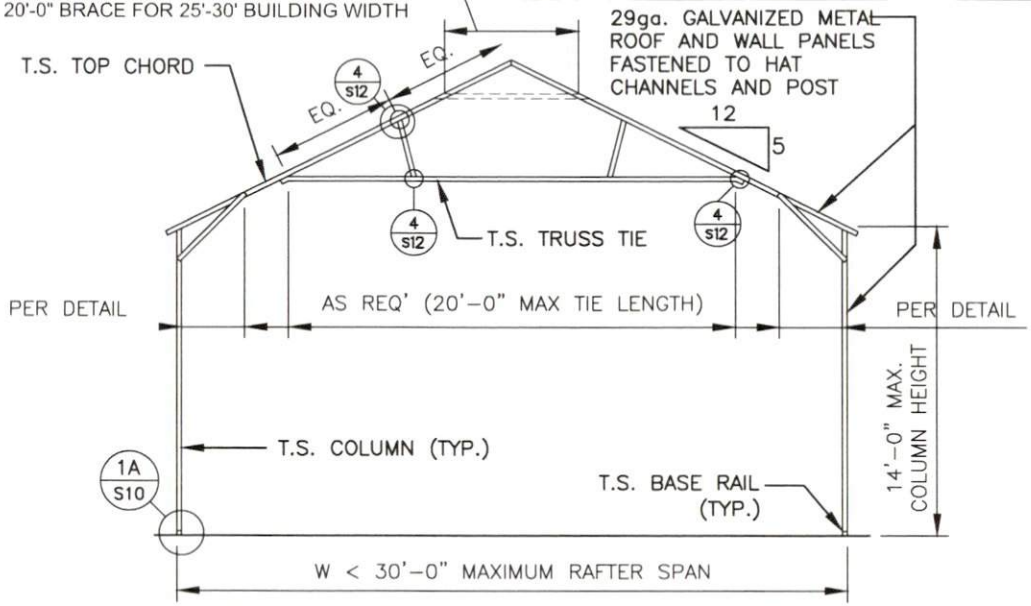

TYPICAL RAFTER / COLUMN FRAME SECTION

NOTE:
H.S.S. 2-1/2"x2-1/2"x14ga. OR 2-1/4"x2-1/4"x14ga. MATERIAL MAY BE USED FOR TRUSS METAL.

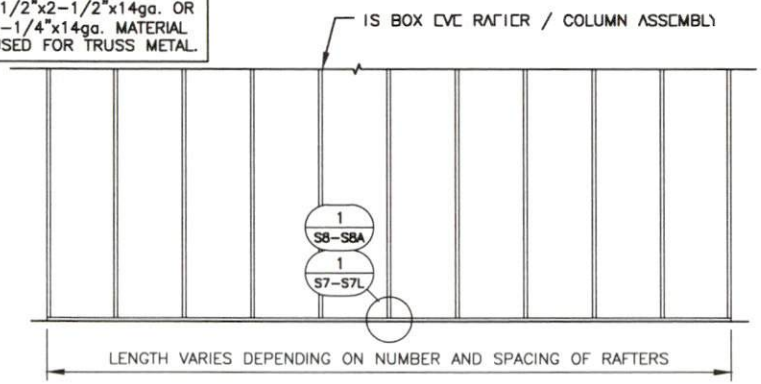

TYPICAL RAFTER / COLUMN SIDE FRAME SECTION

THIS DRAWING IS PRELIMINARY UNTIL SIGNED AND SEALED BY THE LICENSED PROFESSIONAL NOTED BELOW.
PROFESSIONAL SEAL

DESIGN PROFESSIONAL
DOTec Engineering
118 N 2nd St,
St. Charles, MO 63301
Ph 636-724-9872
Fx 636-385-5059
WWW.DOTECENGINEERING.COM
INFO@DOTECENGINEERING.COM

ISSUE	DATE	DESCRIPTION

SHEET NAME: TYPICAL SECTIONS

ISSUE DATE: 04/15/2025

CLIENT: HIGH QUALITY STEEL STRUCTURES

ADDRESS: 2267 N Andy Griffith Parkway, Mt Ary, NC 27030

SHEET NUMBER: S5B

PROJECT NUMBER: #82194827

DRAWN BY: HMD

CHECKED BY: MR2

NOTE: THIS DRAWINGS ARE VALID FOR (1) CALENDER YEAR AFTER THE ISSUE DATE LISTED ON THE SHEET.

'U' BRACE TRUSS TIE - NOTE:
2'-0" BRACE FOR 12'-18' BUILDING WIDTH
4'-0" BRACE FOR 19'-20' BUILDING WIDTH
6'-0" BRACE FOR 21'-24' BUILDING WIDTH
20'-0" BRACE FOR 25'-30' BUILDING WIDTH

NOTE:
H.S.S. 2-1/2"x2-1/2"x14ga. OR 2-1/4"x2-1/4"x14ga. MATERIAL MAY BE USED FOR TRUSS METAL.

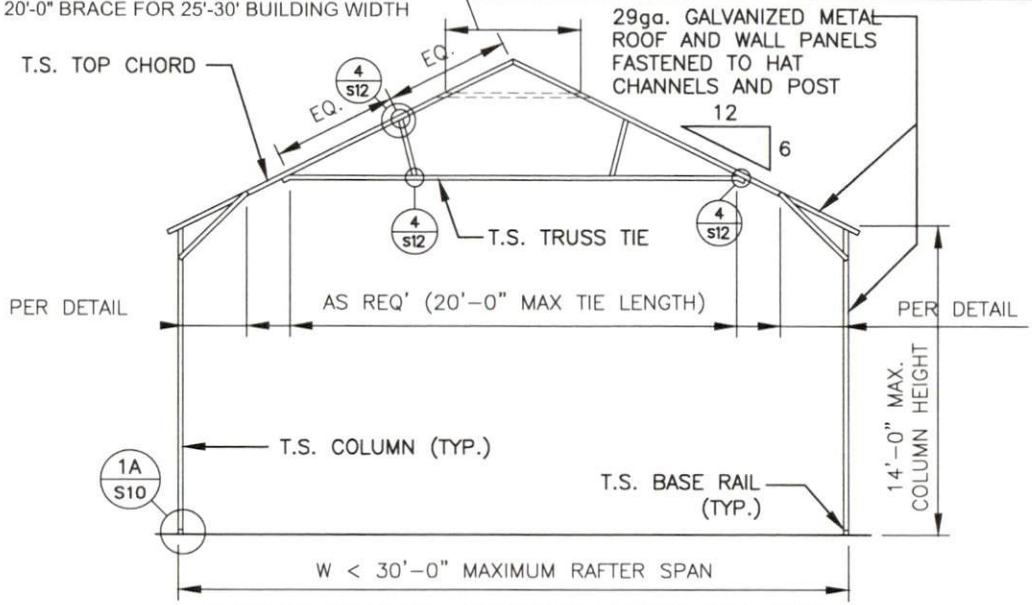

TYPICAL RAFTER / COLUMN FRAME SECTION

NOTE:
H.S.S. 2-1/2"x2-1/2"x14ga. OR 2-1/4"x2-1/4"x14ga. MATERIAL MAY BE USED FOR TRUSS METAL.

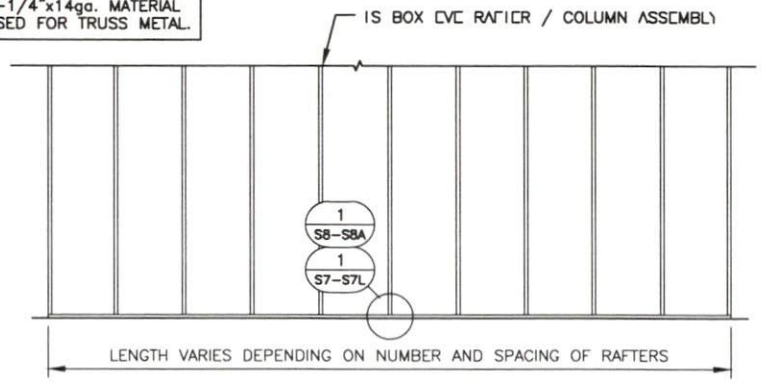

TYPICAL RAFTER / COLUMN SIDE FRAME SECTION

THIS DRAWING IS PRELIMINARY UNTIL SIGNED AND SEALED BY THE LICENSED PROFESSIONAL NOTED BELOW.
PROFESSIONAL SEAL

DESIGN PROFESSIONAL
DOTec Engineering
118 N 2nd St,
St. Charles, MO 63301
Ph 636-724-9872
Fx 636-385-5059
WWW.DOTECENGINEERING.COM
INFO@DOTECENGINEERING.COM

ISSUE	DATE	DESCRIPTION

SHEET NAME: TYPICAL SECTIONS

ISSUE DATE: 04/15/2025

CLIENT: HIGH QUALITY STEEL STRUCTURES

ADDRESS: 2267 N Andy Griffith Parkway, Mt Airy, NC 27030

SHEET NUMBER: S5C

PROJECT NUMBER: 8025-0527

DRAWN BY: HMO

CHECKED BY: MRZ

NOTE: THIS DRAWINGS ARE VALID FOR (1) CALENDER YEAR AFTER THE ISSUE DATE LISTED ON THE SHEET.

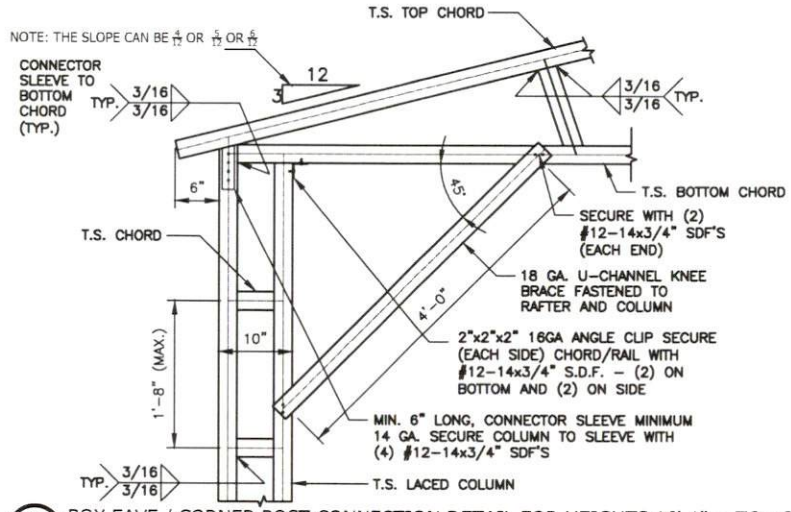

1 / S6 BOX EAVE / CORNER POST CONNECTION DETAIL FOR HEIGHTS 16'-1" < TO <20'-0"

SCALE: 3/4" = 1'-0"

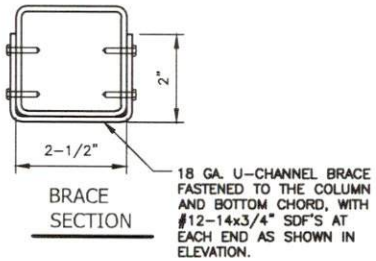

BRACE SECTION

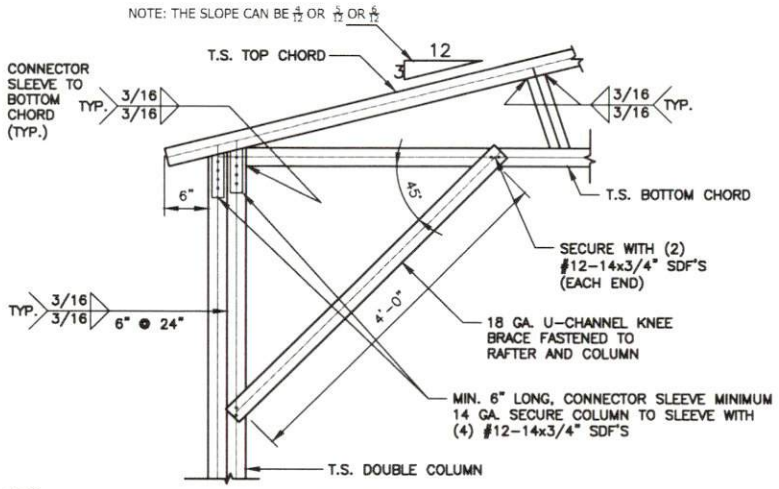

1A / S6A BOX EAVE / CORNER POST CONNECTION DETAIL FOR HEIGHTS 14'-1" < TO <16'-0"

SCALE: 3/4" = 1'-0"

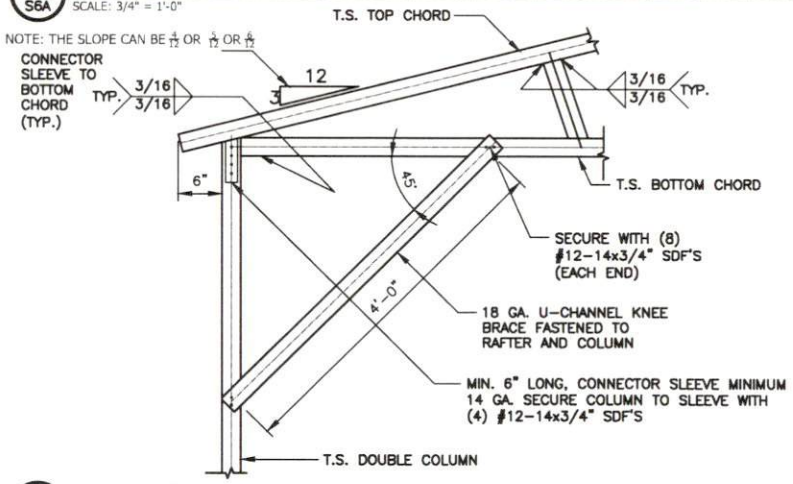

1B / S6A BOX EAVE / CORNER POST CONNECTION DETAIL FOR HEIGHTS < 14'-0"

SCALE: 3/4" = 1'-0"

THIS DRAWING IS PRELIMINARY UNTIL SIGNED AND SEALED BY THE LICENSED PROFESSIONAL NOTED BELOW.

PROFESSIONAL SEAL

DESIGN PROFESSIONAL
DOTec Engineering
118 N 2nd St.
St. Charles, MO 63301
Ph 636-724-9872
Fx 636-385-5059
WWW.DOTECENGINEERING.COM
INFO@DOTECENGINEERING.COM

ISSUE	DATE	DESCRIPTION

SHEET NAME: CORNER CONNCTION DETAIL

ISSUE DATE: 04/15/2025

D.Dwn: HIGH QUALITY STEEL STRUCTURES

ADDRESS: 2267 N Andy Griffith Parkway, Mt Airy, NC 27030

SHEET NUMBER: S6

PROJECT NUMBER: 2021B4027

DRAWN BY: HMO

CHECKED BY: MRZ

NOTE: THIS DRAWINGS ARE VALID FOR (1) CALENDER YEAR AFTER THE ISSUE DATE LISTED ON THE SHEET.

CONCRETE BASE RAIL ANCHORAGE

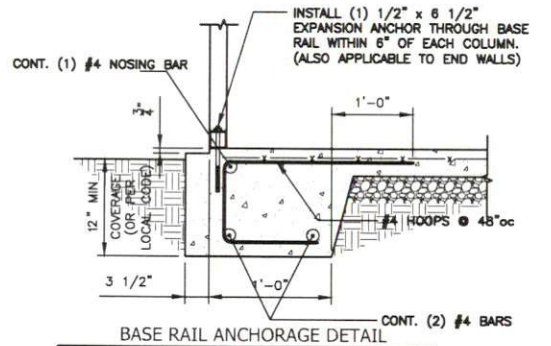

BASE RAIL ANCHORAGE DETAIL

SCALE: 3/4" = 1'-0"

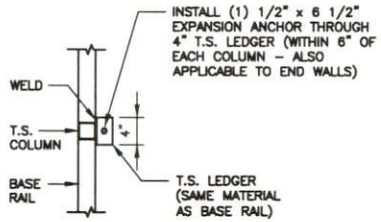

BASE RAIL ANCHORAGE DETAIL (PLAN VIEW)

SCALE: 3/4" = 1'-0"

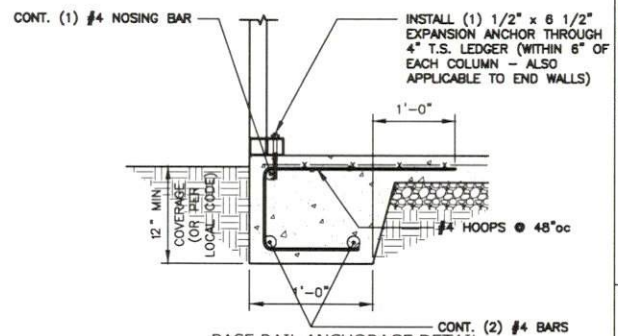

BASE RAIL ANCHORAGE DETAIL

SCALE: 3/4" = 1'-0"

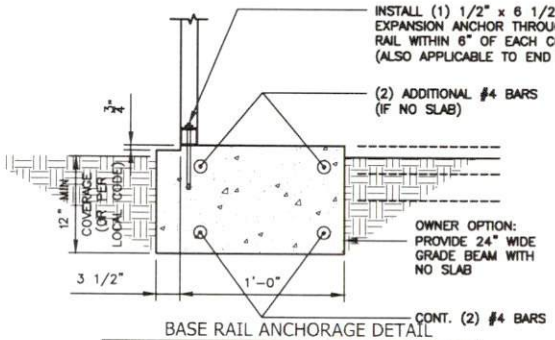

BASE RAIL ANCHORAGE DETAIL

SCALE: 3/4" = 1'-0"

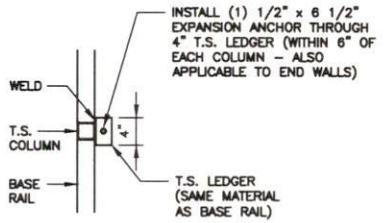

BASE RAIL ANCHORAGE DETAIL (PLAN VIEW)

SCALE: 3/4" = 1'-0"

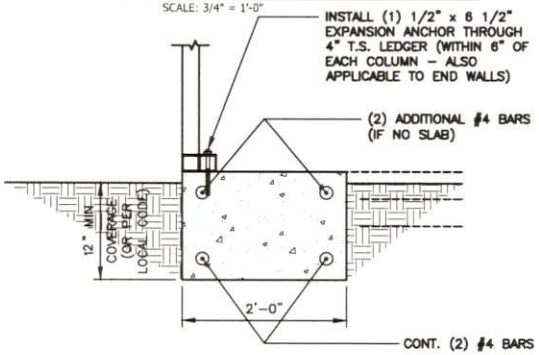

BASE RAIL ANCHORAGE DETAIL

SCALE: 3/4" = 1'-0"

GENERAL NOTES:

ALL CONCRETE MONOLITHIC SLAB DESIGN BASED ON MINIMUM SOIL BEARING CAPACITY OF 2,000 P.S.F.

CONCRETE:
CONCRETE SHALL HAVE A MINIMUM SPECIFIED COMPRESSIVE STRENGTH OF 3,000 P.S.I. AT 28 DAYS.

COVER OVER REINFORCING STEEL:
FOR FOUNDATIONS, MINIMUM CONCRETE COVER OVER REINFORCING BARS SHALL BE PER ACI–318:
3" IN FOUNDATIONS WHERE THE CONCRETE IS CAST AGAINST AND PERMANENTLY IN CONTACT WITH THE EARTH OR EXPOSED TO THE EARTH AND WEATHER AND 1–1/2" ELSEWHERE.

REINFORCING STEEL:
THE TURNDOWN REINFORCING STEEL SHALL BE ASTM A615 GRADE 60. THE SLAB REINFORCEMENT SHALL BE WELDED WIRE FABRIC MEETING ASTM A185 OR FIBERGLASS FIBER REINFORCEMENT.

REINFORCEMENT MAT BE BENT IN THE SHOP OF THE FIELD PROVIDED:
1. REINFORCEMENT IS BENT COLD.
2. THE DIAMETER OF THE BEND, MEASURED ON THE INSIDE OF THE BAR, IS NOT LESS THAN SIX–BAR DIAMETERS.
3. REINFORCEMENT PARTIALLY EMBEDDED IN CONCRETE SHALL NOT BE FIELD BENT.

THIS DRAWING IS PRELIMINARY UNTIL SIGNED AND SEALED BY THE LICENSED PROFESSIONAL NOTED BELOW

PROFESSIONAL SEAL

DESIGN PROFESSIONAL
DOTec Engineering
118 N 2nd St.
St. Charles, MO 63301
Ph 636-724-9872
Fx 636-385-5059
WWW.DOTECENGINEERING.COM
INFO@DOTECENGINEERING.COM

DESCRIPTION	DATE	BY

SHEET NAME: FOUNDATION DETAIL

ISSUE DATE: 04/15/2025

CLIENT: HIGH QUALITY STEEL STRUCTURES

ADDRESS: 2267 N Andy Griffith Parkway, Mt Airy, NC 27030

SHEET NUMBER: S7

PROJECT NUMBER: 1622SM027

DRAWN BY: HMO

CHECKED BY: MKL

NOTE: THIS DRAWINGS ARE VALID FOR (1) CALENDER YEAR AFTER THE ISSUE DATE LISTED ON THE SHEET.

CONCRETE BASE RAIL ANCHORAGE

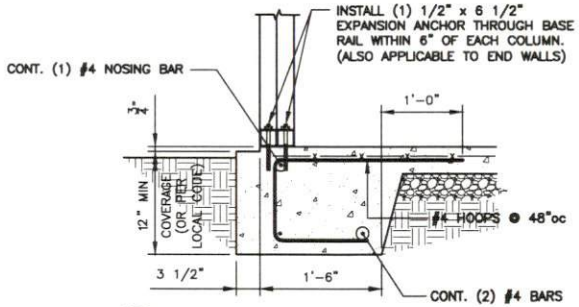

1 S7D BASE RAIL ANCHORAGE DETAIL
SCALE: 3/4" = 1'-0"

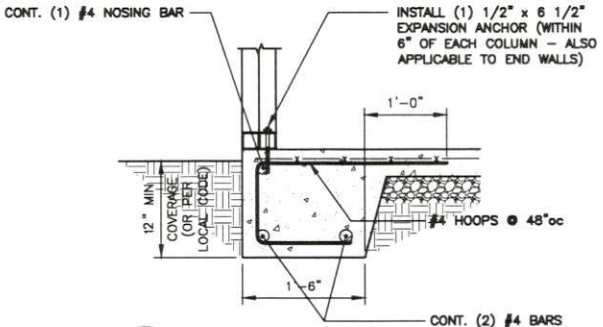

1 S7F BASE RAIL ANCHORAGE DETAIL
SCALE: 3/4" = 1'-0"

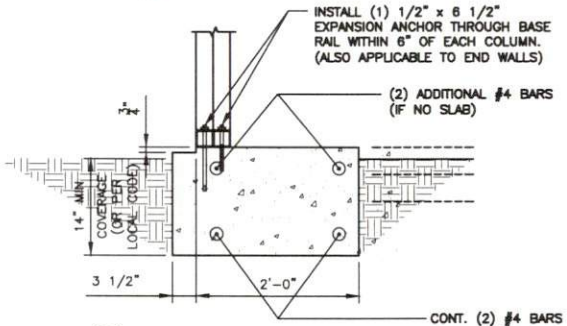

1 S7E BASE RAIL ANCHORAGE DETAIL
SCALE: 3/4" = 1'-0"

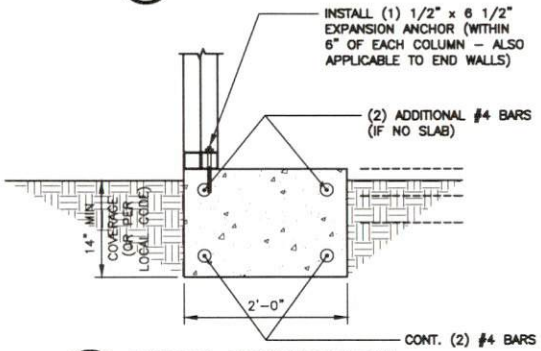

1 S7G BASE RAIL ANCHORAGE DETAIL
SCALE: 3/4" = 1'-0"

GENERAL NOTES:

ALL CONCRETE MONOLITHIC SLAB DESIGN BASED ON MINIMUM SOIL BEARING CAPACITY OF 2,000 P.S.F.

CONCRETE:
CONCRETE SHALL HAVE A MINIMUM SPECIFIED COMPRESSIVE STRENGTH OF 3,000 P.S.I. AT 28 DAYS.

COVER OVER REINFORCING STEEL:
FOR FOUNDATIONS, MINIMUM CONCRETE COVER OVER REINFORCING BARS SHALL BE PER ACI–318:
3" IN FOUNDATIONS WHERE THE CONCRETE IS CAST AGAINST AND PERMANENTLY IN CONTACT WITH THE EARTH OR EXPOSED TO THE EARTH AND WEATHER AND 1–1/2" ELSEWHERE.

REINFORCING STEEL:
THE TURNDOWN REINFORCING STEEL SHALL BE ASTM A615 GRADE 60. THE SLAB REINFORCEMENT SHALL BE WELDED WIRE FABRIC MEETING ASTM A185 OR FIBERGLASS FIBER REINFORCEMENT.

REINFORCEMENT MAT BE BENT IN THE SHOP OF THE FIELD PROVIDED:
1. REINFORCEMENT IS BENT COLD.
2. THE DIAMETER OF THE BEND, MEASURED ON THE INSIDE OF THE BAR, IS NOT LESS THAN SIX–BAR DIAMETERS.
3. REINFORCEMENT PARTIALLY EMBEDDED IN CONCRETE SHALL NOT BE FIELD BENT.

NOTE: THIS DRAWINGS ARE VALID FOR (1) CALENDER YEAR AFTER THE ISSUE DATE LISTED ON THE SHEET.

THIS DRAWING IS PRELIMINARY UNTIL SIGNED AND SEALED BY THE LICENSED PROFESSIONAL NOTED BELOW
PROFESSIONAL SEAL

DESIGN PROFESSIONAL
DOTec Engineering
118 N 2nd St.
St. Charles, MO 63301
Ph 636-724-9872
Fx 636-385-5059
WWW.DOTECENGINEERING.COM
INFO@DOTECENGINEERING.COM

ISSUE	DATE	DESCRIPTION
ISSUED	MM/DD/YYYY	

SHEET NAME: FOUNDATION DETAIL

ISSUE DATE: 04/15/2025

CLIENT: HIGH QUALITY STEEL STRUCTURES

ADDRESS: 2267 N Andy Griffith Parkway, Mt Airy, NC 27030

SHEET NUMBER: S8

PROJECT NUMBER: 8829-4027

DRAWN BY: HMD

CHECKED BY: MRC

CONCRETE BASE RAIL ANCHORAGE

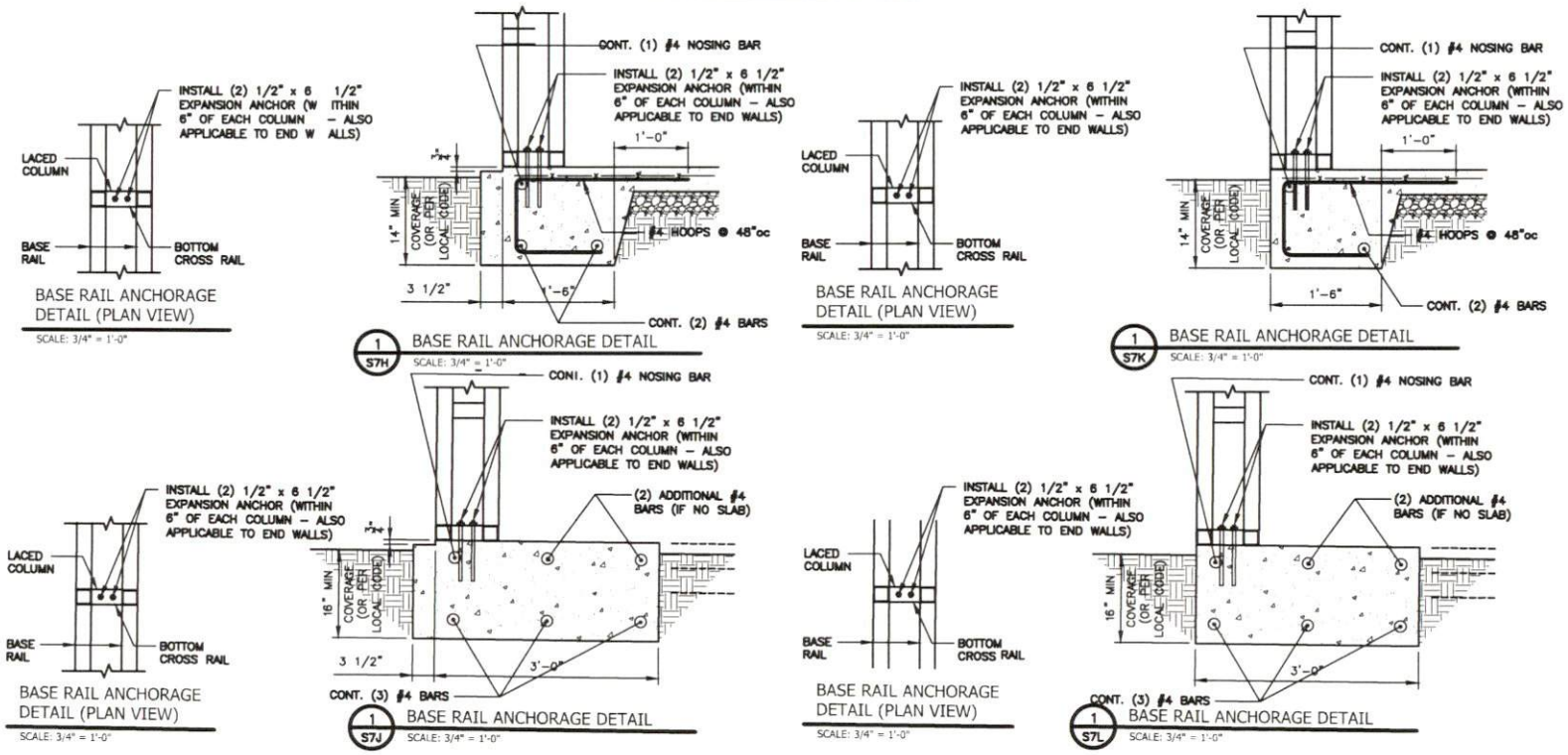

GENERAL NOTES:

ALL CONCRETE MONOLITHIC SLAB DESIGN BASED ON MINIMUM SOIL BEARING CAPACITY OF 2,000 P.S.F.

CONCRETE:
CONCRETE SHALL HAVE A MINIMUM SPECIFIED COMPRESSIVE STRENGTH OF 3,000 P.S.I. AT 28 DAYS.

COVER OVER REINFORCING STEEL:
FOR FOUNDATIONS, MINIMUM CONCRETE COVER OVER REINFORCING BARS SHALL BE PER ACI–318:
3" IN FOUNDATIONS WHERE THE CONCRETE IS CAST AGAINST AND PERMANENTLY IN CONTACT WITH THE EARTH OR EXPOSED TO THE EARTH AND WEATHER AND 1–1/2" ELSEWHERE.

REINFORCING STEEL:
THE TURNDOWN REINFORCING STEEL SHALL BE ASTM A615 GRADE 60. THE SLAB REINFORCEMENT SHALL BE WELDED WIRE FABRIC MEETING ASTM A185 OR FIBERGLASS FIBER REINFORCEMENT.

REINFORCEMENT MAT BE BENT IN THE SHOP OF THE FIELD PROVIDED:

1. REINFORCEMENT IS BENT COLD.
2. THE DIAMETER OF THE BEND, MEASURED ON THE INSIDE OF THE BAR, IS NOT LESS THAN SIX–BAR DIAMETERS.
3. REINFORCEMENT PARTIALLY EMBEDDED IN CONCRETE SHALL NOT BE FIELD BENT.

NOTE: THIS DRAWINGS ARE VALID FOR (1) CALENDER YEAR AFTER THE ISSUE DATE LISTED ON THE SHEET.

THIS DRAWING IS PRELIMINARY UNTIL SIGNED AND SEALED BY THE LICENSED PROFESSIONAL NOTED BELOW

PROFESSIONAL SEAL

DESIGN PROFESSIONAL
DOTec Engineering
118 N 2nd St.
St. Charles, MO 63301
Ph 636-724-9872
Fx 636-385-5059
WWW.DOTECENGINEERING.COM
INFO@DOTECENGINEERING.COM

DESCRIPTION	DATE	ISSUE

SHEET NAME: FOUNDATION DETAIL

ISSUE DATE: 04/15/2025

CLIENT: HIGH QUALITY STEEL STRUCTURES

ADDRESS: 2267 N Andy Griffith Parkway, Mt Airy, NC 27030

SHEET NUMBER: S9

PROJECT NUMBER: #22184027

DRAWN BY: HMO

CHECKED BY: MKJ

SOIL NAIL BASE RAIL ANCHORAGE

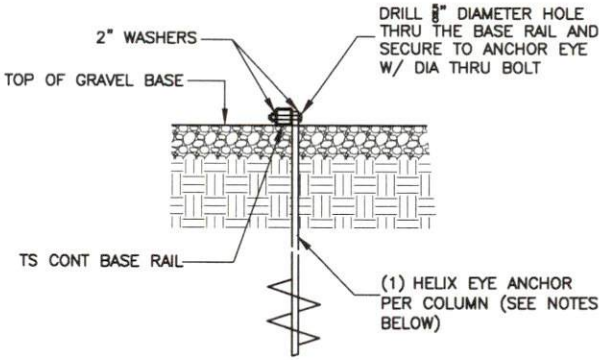

1 / S8 BASE RAIL ANCHORAGE DETAIL

SCALE: 3/4" = 1'-0"

HELIX EMBEDMENT INFORMATION:

FOR VERY DENSE OR CEMETED SANDS, COARSE GRAVEL, COBBLES, CALICHE, PRELOADED SILTS AND CLAYS, USE MIN. (2) 4" HELICES WITH MINIMUM 30" EMBEDMENT OR SINGLE 6" HELIX WITH 50" EMBEDMENT – ONE EACH END BASE RAIL AND 20'–0"oc MAX. WITH #4 REBAR AT 5'–0"oc BETWEEN.

FOR CORAL, USE MIN (2) 4" HELICES WITH MINIMUM 30" EMBEDMENT OR SINGLE 6" HELIX WITH 50" EMBEDMENT – ONE EACH END BASE RAIL AND 20'–0"oc MAX. WITH #4 REBAR AT 5'–0"oc BETWEEN.

FOR MED DENSE COARSE SANDS, SANDY GRAVEL, VERY STIFF SILTS, AND CLAYS, USE MIN (2) 4" HELICES WITH MINIMUM 30" EMBEDMENT OR SINGLE 6" HELIX WITH 50" EMBEDMENT – ONE EACH END BASE RAIL AND 20'–0"oc MAX. WITH #4 REBAR AT 5'–0"oc BETWEEN.

FOR LOOSE TO MEDIUM DENSE SANDS, FIRM TO STIFF CLAYS AND SILTS, USE MIN (2) 6" HELICES WITH MINIMUM 50" EMBEDMENT – ONE EACH END BASE RAIL AND 20'–0"oc MAX. WITH #4 REBAR AT 5'–0"oc BETWEEN.

FOR VERY LOOSE TO MEDIUM DENSE SANDS, FIRM TO STIFFER CLAYS AND SILTS AND ALLUVIAL FILL, USE MIN (2) 8" HELICES WITH MINIMUM 60" EMBEDMENT – ONE EACH END BASE RAIL AND 20'–0"oc MAX. WITH #4 REBAR AT 5'–0"oc BETWEEN.

NOTE:
IN ALL CASES, IF FROST DEPTH EXCEEDS STATED DEPTH, ANCHOR SHOULD EXTEND A MIN. OF 12" BELOW FROST LINE.

ASPHALT ANCHOR BASE RAIL ANCHORAGE

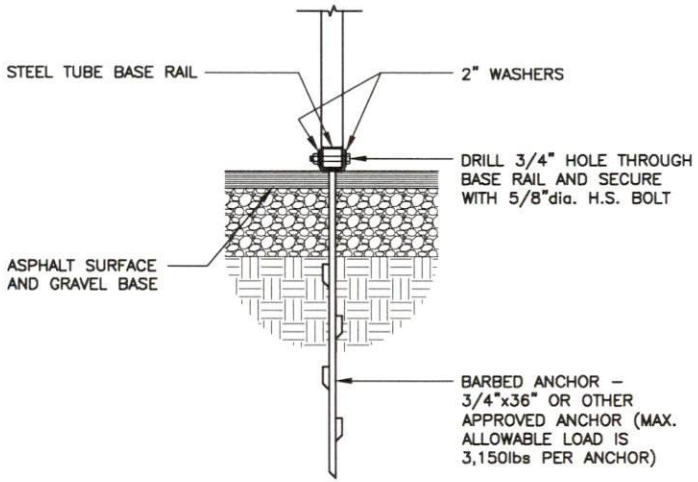

1 / S8A ASPHALT / BASE RAIL ANCHORAGE DETAIL

SCALE: 3/4" = 1'-0"

THIS DRAWING IS PRELIMINARY UNTIL SIGNED AND SEALED BY THE LICENSED PROFESSIONAL NOTED BELOW

PROFESSIONAL SEAL

DESIGN PROFESSIONAL
DOTec Engineering
118 N 2nd St.
St. Charles, MO 63301
Ph 636-724-9872
Fx 636-385-5059
WWW.DOTECENGINEERING.COM
INFO@DOTECENGINEERING.COM

ISSUE	DATE	DESCRIPTION

SHEET NAME: ANCHOR BASE DETAIL

ISSUE DATE: 04-15-2025

CLIENT: HIGH QUALITY STEEL STRUCTURES

ADDRESS: 2267 N Andy Griffith Parkway, Mt Airy, NC 27030

SHEET NUMBER: S10

PROJECT NUMBER: #22154727

DRAWN BY: HMG

CHECKED BY: MKG

NOTE: THIS DRAWINGS ARE VALID FOR (1) CALENDER YEAR AFTER THE ISSUE DATE LISTED ON THE SHEET.

BOX EVE RAFTER END WALL AND SIDE WALL OPENINGS

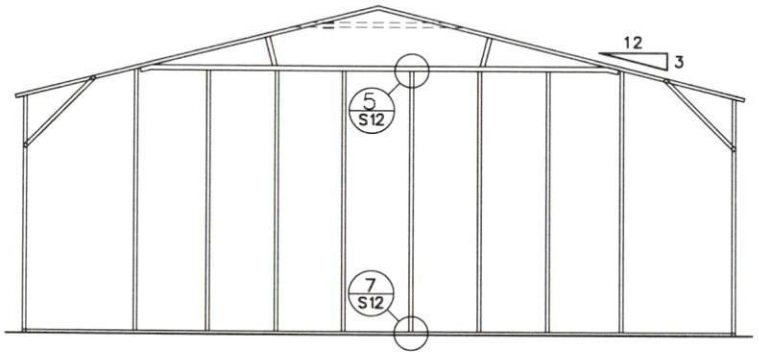

TYPICAL BOX EVE RAFTER / END WALL COLUMN FRAME SECTION

NOTE:
ROLL UP DOORS SHALL HAVE ONE JAMB EACH SIDE + ONE FRAME COLUMN BETWEEN OR SITE SPECIFIC SHALL BE REQ'D.

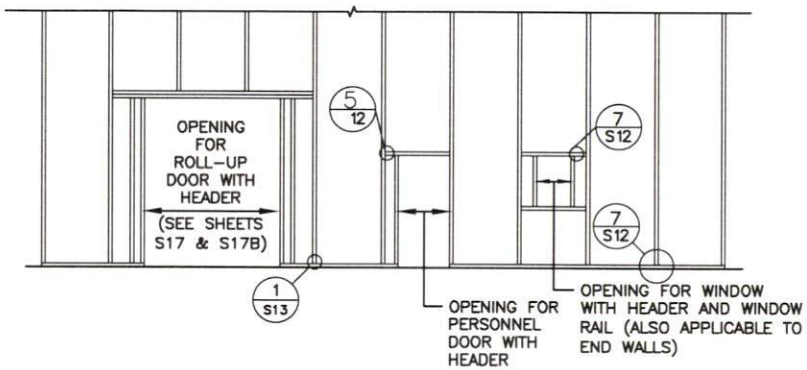

TYPICAL END WALL OPENING FRAMING SECTION

NOTE:
ROLL UP DOORS SHALL HAVE ONE JAMB EACH SIDE + ONE FRAME COLUMN BETWEEN OR SITE SPECIFIC SHALL BE REQ'D.

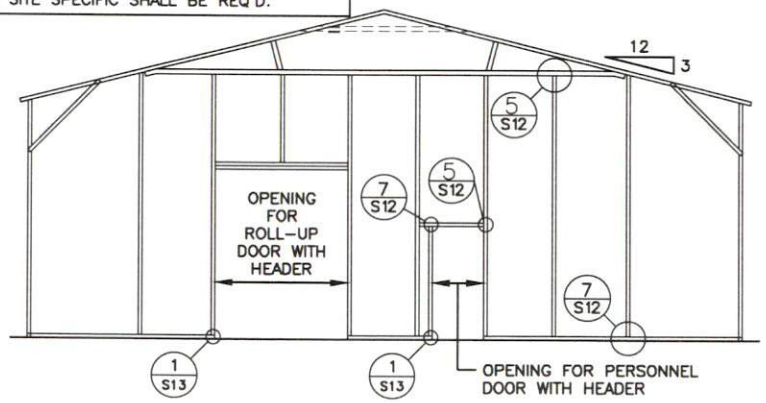

TYPICAL BOX EVE RAFTER END WALL OPENINGS FRAMING SECTION

NOTE:
ROLL UP DOORS SHALL HAVE ONE JAMB EACH SIDE + ONE FRAME COLUMN BETWEEN OR SITE SPECIFIC SHALL BE REQ'D.

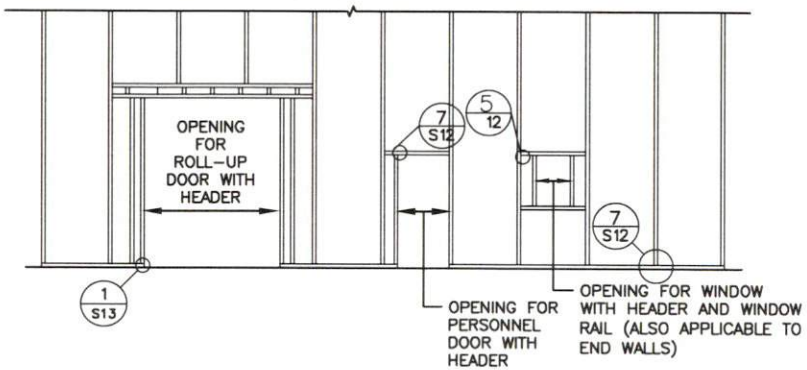

TYPICAL SIDE WALL OPENING FRAMING SECTION

NOTE: THIS DRAWINGS ARE VALID FOR (1) CALENDER YEAR AFTER THE ISSUE DATE LISTED ON THE SHEET.

THIS DRAWING IS PRELIMINARY UNTIL SIGNED AND SEALED BY THE LICENSED PROFESSIONAL NOTED BELOW.

PROFESSIONAL SEAL

DESIGN PROFESSIONAL
DOTec Engineering
118 N 2nd St.
St. Charles, MO 63301
Ph 636-724-9872
Fx 636-385-5059
WWW.DOTECENGINEERING.COM
INFO@DOTECENGINEERING.COM

ISSUE	DATE	DESCRIPTION

SHEET NAME: WALL OPPENNING DETAIL

ISSUE DATE: 04-15-2025

PROJECT: HIGH QUALITY STEEL STRUCTURES

ADDRESS: 2267 N Andy Griffith Parkway, Mt Airy, NC 27030

SHEET NUMBER: S11

PROJECT NUMBER: 892364927

DRAWN BY: HMO

CHECKED BY: MRC

CONNECTION DETAILS

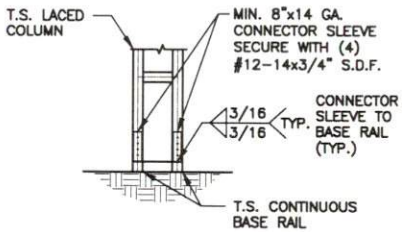

1 POST / BASE RAIL CONNECTION DETAIL
SCALE: 1/2" = 1'-0"

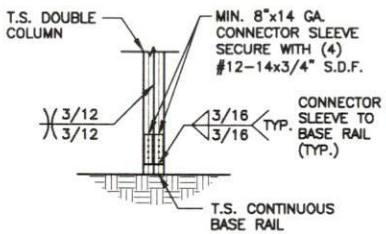

1A POST / BASE RAIL CONNECTION DETAIL
SCALE: 1/2" = 1'-0"

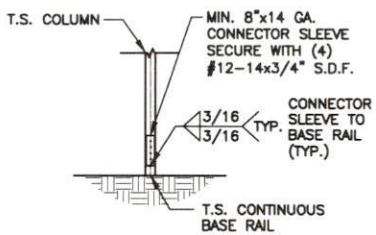

1B POST / BASE RAIL CONNECTION DETAIL
SCALE: 1/2" = 1'-0"

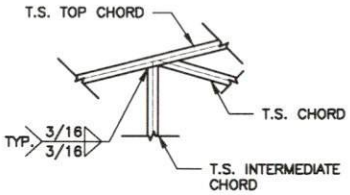

2 INTERMEDIATE CHORD TO TOP CHORD CONNECTION DETAIL
SCALE: 1/2" = 1'-0"

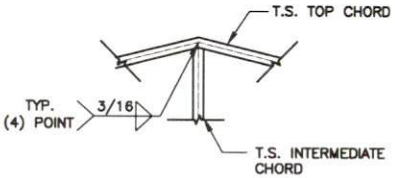

3 CENTER POST TO RAFTER CONNECTION DETAIL
SCALE: 1/2" = 1'-0"

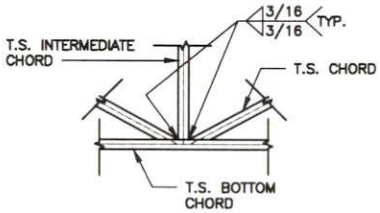

4 INTERMEDIATE CHORD TO TOP CHORD CONNECTION DETAIL
SCALE: 1/2" = 1'-0"

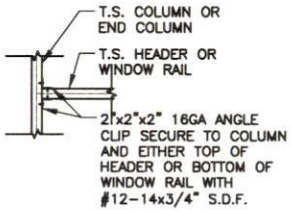

5 COLUMN OR WINDOW RAIL / WALL GIRT TO POST CONNECTION DETAIL
SCALE: 1/2" = 1'-0"

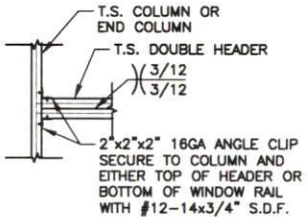

6 COLUMN / DOUBLE HEADER CONNECTION DETAIL
SCALE: 1/2" = 1'-0"

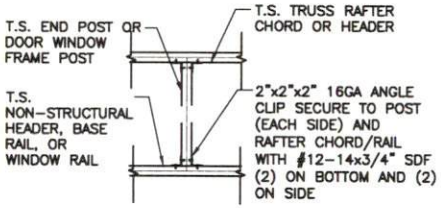

7 DOOR OR WINDOW HEADER RAIL TO POST CONNECTION DETAIL
SCALE: 1/2" = 1'-0"

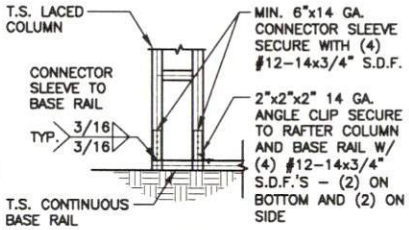

8 END COLUMN / BASE RAIL CONNECTION DETAIL
SCALE: 1/2" = 1'-0"

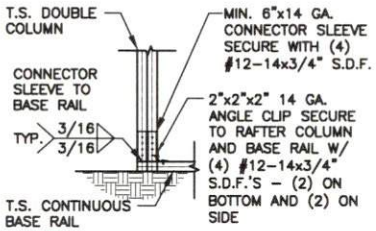

10 END COLUMN / BASE RAIL CONNECTION DETAIL
SCALE: 1/2" = 1'-0"

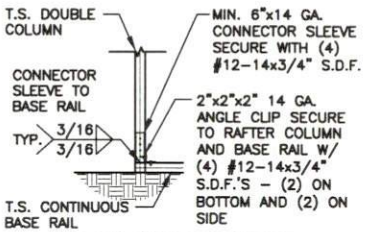

11 END COLUMN / BASE RAIL CONNECTION DETAIL
SCALE: 1/2" = 1'-0"

NOTE: THIS DRAWINGS ARE VALID FOR (1) CALENDER YEAR AFTER THE ISSUE DATE LISTED ON THE SHEET.

THIS DRAWING IS PRELIMINARY UNTIL SIGNED AND SEALED BY THE LICENSED PROFESSIONAL NOTED BELOW.
PROFESSIONAL SEAL

DESIGN PROFESSIONAL
DOTec Engineering
118 N 2nd St.
St. Charles, MO 63301
Ph 636-724-9872
Fx 636-385-5059
WWW.DOTECENGINEERING.COM
INFO@DOTECENGINEERING.COM

DESCRIPTION	DATE	BY

SHEET NAME: CONNECTION DETAIL
ISSUE DATE: 04-15-2025

CLIENT: HIGH QUALITY STEEL STRUCTURES
ADDRESS: 2267 N Andy Griffith Parkway, Mt Airy, NC 27030

SHEET NUMBER: S12
PROJECT NUMBER: R02250027
DRAWN BY: HMO
CHECKED BY: MKL

CONNECTION DETAILS

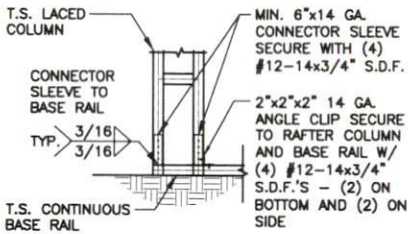

1 END COLUMN / BASE RAIL CONNECTION DETAIL
SCALE: 1/2" = 1'-0"

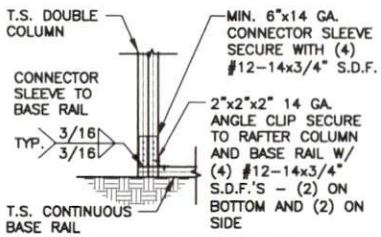

1A END COLUMN / BASE RAIL CONNECTION DETAIL
SCALE: 1/2" = 1'-0"

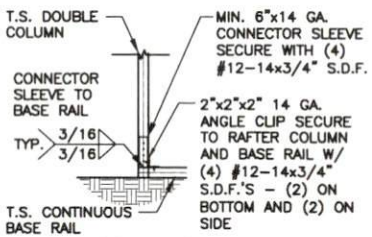

1B END COLUMN / BASE RAIL CONNECTION DETAIL
SCALE: 1/2" = 1'-0"

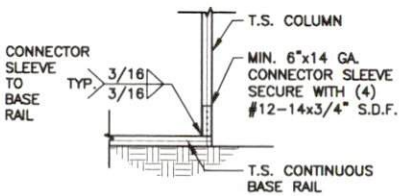

2 COLUMN / BASE RAIL CONNECTION DETAIL
SCALE: 1/2" = 1'-0"

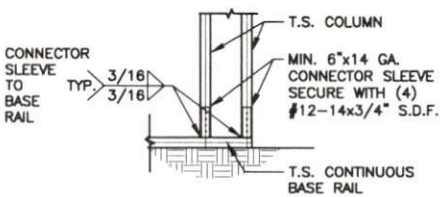

2A COLUMN / BASE RAIL CONNECTION DETAIL
SCALE: 1/2" = 1'-0"

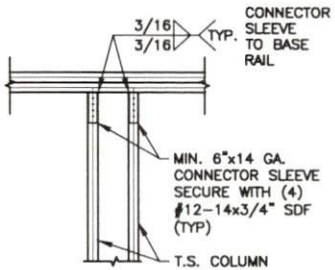

3 DOUBLE HEADER / COLUMN CONNECTION DETAIL
SCALE: 1/2" = 1'-0"

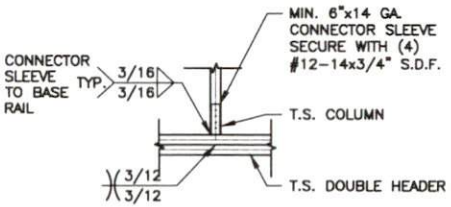

4 COLUMN / DOUBLE HEADER CONNECTION DETAIL
SCALE: 1/2" = 1'-0"

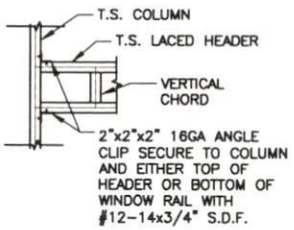

5 COLUMN / LACED HEADER CONNECTION DETAIL
SCALE: 1/2" = 1'-0"

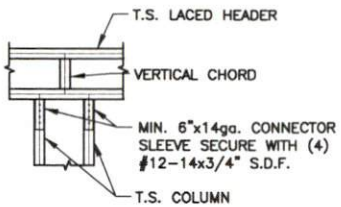

6 LACED HEADER / COLUMN CONNECTION DETAIL
SCALE: 1/2" = 1'-0"

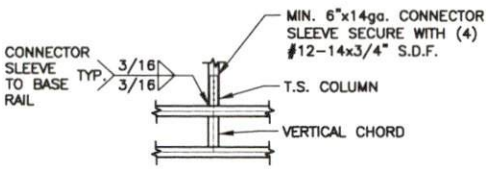

7 COLUMN / LACED HEADER CONNECTION DETAIL
SCALE: 1/2" = 1'-0"

NOTE: THIS DRAWINGS ARE VALID FOR (1) CALENDER YEAR AFTER THE ISSUE DATE LISTED ON THE SHEET.

THIS DRAWING IS PRELIMINARY UNTIL SIGNED AND SEALED BY THE LICENSED PROFESSIONAL NOTED BELOW
PROFESSIONAL SEAL

DESIGN PROFESSIONAL
DOTec Engineering
118 N 2nd St.
St. Charles, MO 63301
Ph 636-724-9872
Fx 636-385-5059
WWW.DOTECENGINEERING.COM
INFO@DOTECENGINEERING.COM

DATE	DESCRIPTION

SHEET NAME
CONNECTION DETAIL
ISSUE DATE 04/15/2025

HIGH QUALITY STEEL STRUCTURES
2267 N Andy Griffith Parkway, Mt Ary, NC 27030

SHEET NUMBER
S13

PROJECT NUMBER 2021-0402
DRAWN BY HMO
CHECKED BY MRZ

BOX EVE RAFTER LEAN-TO OPTIONS

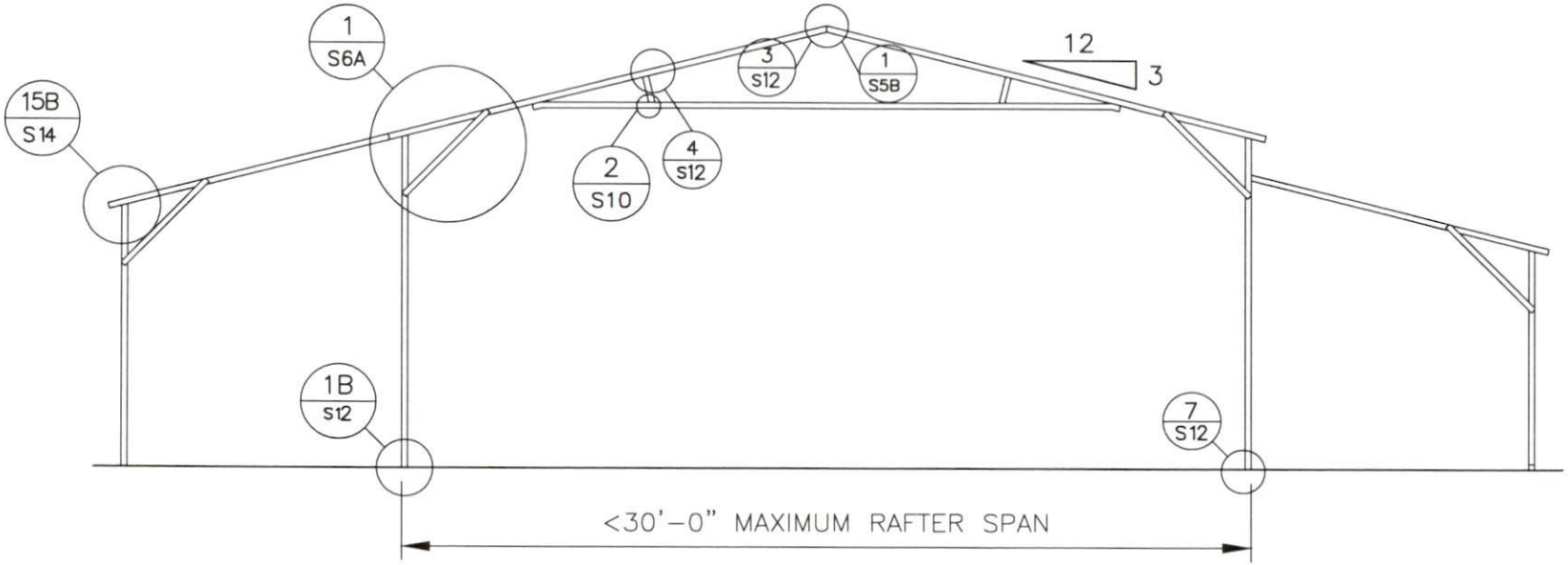

TYPICAL LEAN-TO OPTIONS FRAMING SECTION (BOTH OPTIONS SHOWN)

MAXIMUM WIDTH OF SINGLE MEMBER ROOF EXTENSION AND LEAN-TO OPTION IS 10'-0"
MAXIMUM WIDTH OF DOUBLE MEMBER ROOF EXTENSION AND LEAN-TO IS 15'-0"
12'-0" MAX. LEAN-TO HEIGHT WITH SINGLE COLUMN
16'-0" MAX. LEAN-TO HEIGHT WITH DOUBLE COLUMN
20'-0" MAX. LEAN-TO HEIGHT WITH DOUBLE COLUMN

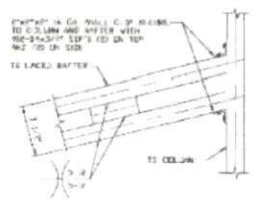

15B LEAN-TO RAFTER TO RAFTER COLUMN CONNECTION DETAIL FOR SPAN 16'-0" < L ≤ 20'-0"
SCALE: NTS

THIS DRAWING IS PRELIMINARY UNTIL SIGNED AND SEALED BY THE LICENSED PROFESSIONAL NOTED BELOW
PROFESSIONAL SEAL

DESIGN PROFESSIONAL
DOTec Engineering
118 N 2nd St.
St. Charles, MO 63301
Ph 636-724-9872
Fx 636-385-5059
WWW.DOTECENGINEERING.COM
INFO@DOTECENGINEERING.COM

ISSUE	DATE	DESCRIPTION

SHEET NAME: BOX-EVE RAFTER DETAIL

ISSUE DATE: 04/15/2009

CLIENT: HIGH QUALITY STEEL STRUCTURES

ADDRESS: 2267 N Andy Griffith Parkway, Mt Airy, NC 27030

SHEET NUMBER: S14

PROJECT NUMBER: 0829R0027

DRAWN BY: HMD

CHECKED BY: MRZ

NOTE: THIS DRAWINGS ARE VALID FOR (1) CALENDER YEAR AFTER THE ISSUE DATE LISTED ON THE SHEET.

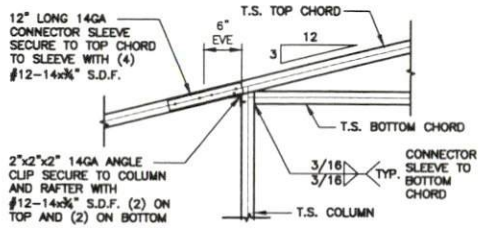

1 ROOF EXTENSION RAFTER / CORNER POST DETAIL FOR WIDTHS < 10'-0"

SCALE: 3/4" = 1'-0"

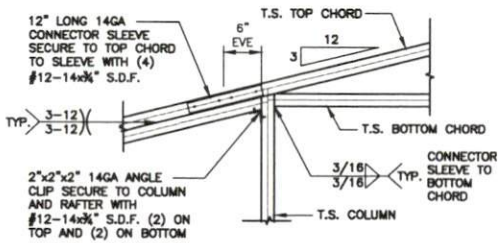

1A ROOF EXTENSION RAFTER / CORNER POST DETAIL FOR WIDTHS < 10'-0"

SCALE: 3/4" = 1'-0"

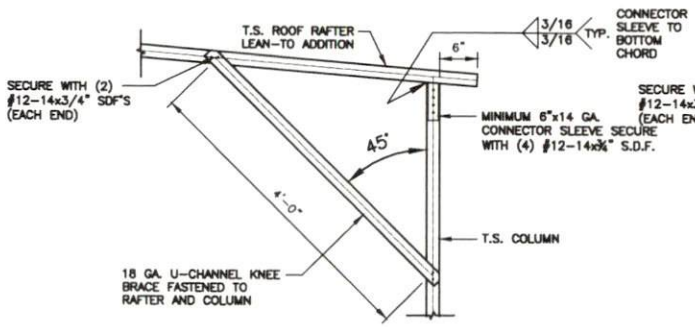

2 BOX EAVE RAFTER COLUMN CONNECTION DETAIL FOR LEAN-TO RAFTER SPAN <10'-0"

SCALE: 3/4" = 1'-0"

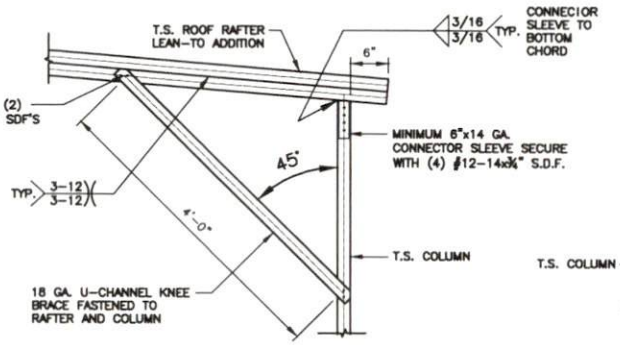

2A BOX EAVE RAFTER COLUMN CONNECTION DETAIL FOR LEAN-TO RAFTER SPAN <15'-0"

SCALE: 3/4" = 1'-0"

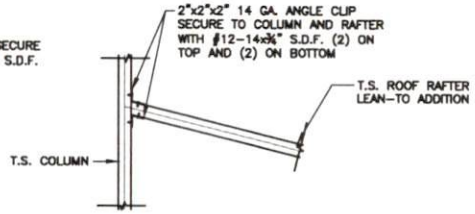

3 LEAN-TO RAFTER TO RAFTER POST CONNECTION DETAIL FOR WIDTHS < 10'-0"

SCALE: 3/4" = 1'-0"

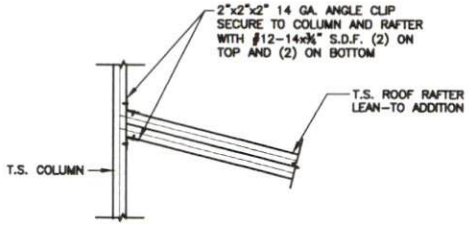

4 LEAN-TO RAFTER TO RAFTER POST CONNECTION DETAIL FOR WIDTHS < 15'-0"

SCALE: 3/4" = 1'-0"

NOTE: THIS DRAWINGS ARE VALID FOR (1) CALENDER YEAR AFTER THE ISSUE DATE LISTED ON THE SHEET.

THIS DRAWING IS PRELIMINARY UNTIL SIGNED AND SEALED BY THE LICENSED PROFESSIONAL NOTED BELOW

PROFESSIONAL SEAL

DESIGN PROFESSIONAL
DOTec Engineering
118 N 2nd St,
St. Charles, MO 63301
Ph 636-724-9872
Fx 636-385-5059
WWW.DOTECENGINEERING.COM
INFO@DOTECENGINEERING.COM

DESCRIPTION	DATE	ISSUE

SHEET NAME: LEANS DETAIL

ISSUE DATE: 04/15/2025

CLIENT: HIGH QUALITY STEEL STRUCTURES

ADDRESS: 2267 N Andy Griffith Parkway, Mt Ary, NC 27030

SHEET NUMBER: S15

PROJECT NUMBER: 1922154012

DRAWN BY: HUO

CHECKED BY: MRZ

VERTICAL ROOF / SIDING OPTION

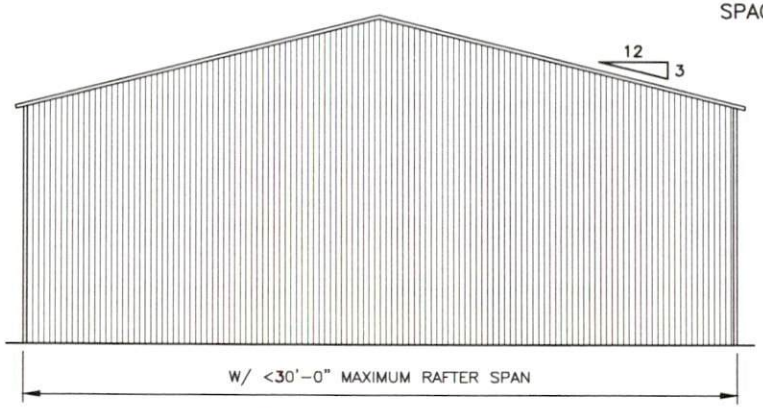

TYPICAL END ELEVATION - VERTICAL ROOF / SIDING

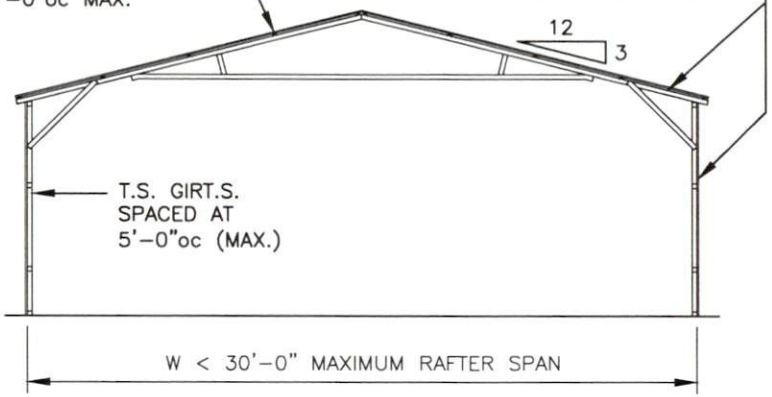

TYPICAL SECTION VERTICAL ROOF / SIDING OPTION

NOTE:
H.S.S. 2-1/2"x2-1/2"x14ga. OR 2-1/4"x2-1/4"x12 ga. MATERIAL MAY BE USED FOR TRUSS METAL.

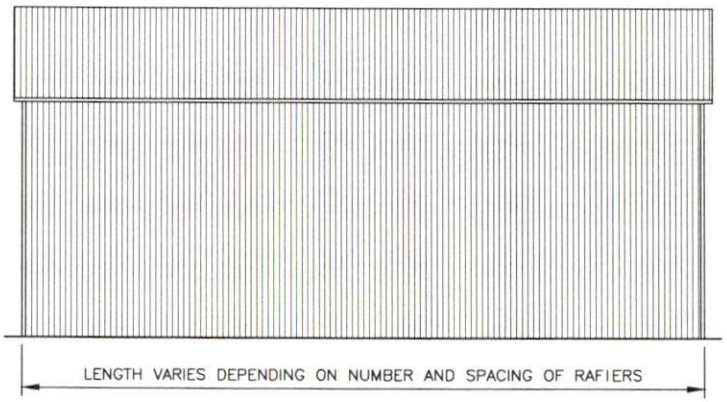

TYPICAL SIDE ELEVATION - VERTICAL ROOF / SIDING

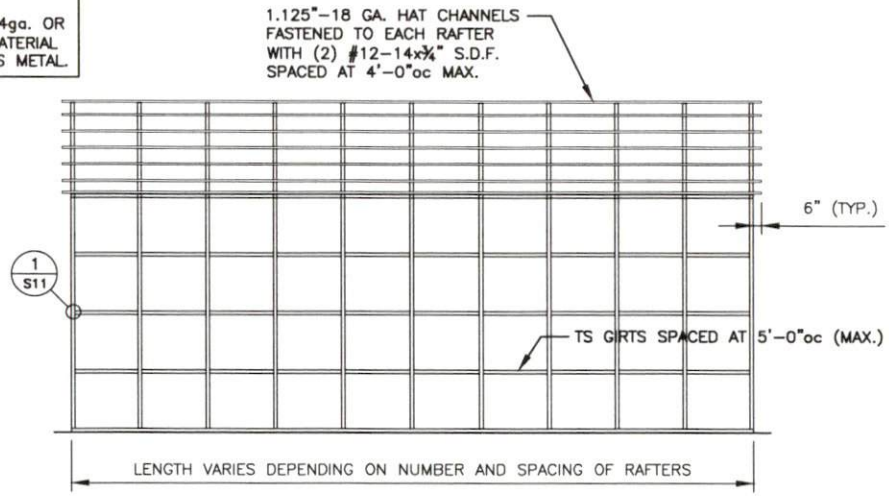

TYPICAL SIDE FRAMING SECTION VERTICAL ROOF / SIDING OPTION

THIS DRAWING IS PRELIMINARY UNTIL SIGNED AND SEALED BY THE LICENSED PROFESSIONAL NOTED BELOW

PROFESSIONAL SEAL

DESIGN PROFESSIONAL
DOTec Engineering
118 N 2nd St.
St. Charles, MO 63301
Ph 636-724-9872
Fx 636-385-5059
WWW.DOTECENGINEERING.COM
INFO@DOTECENGINEERING.COM

SHEET NAME: VERTICAL WALL SIDING OPTION

ISSUE DATE: 04/15/2025

CLIENT: HIGH QUALITY STEEL STRUCTURES

ADDRESS: 2267 N Andy Griffith Parkway, Mt. Airy, NC 27030

SHEET NUMBER: S16

PROJECT NUMBER: 2025-04-27

DRAWN BY: HMC

CHECKED BY: MRC

NOTE: THIS DRAWINGS ARE VALID FOR (1) CALENDER YEAR AFTER THE ISSUE DATE LISTED ON THE SHEET.

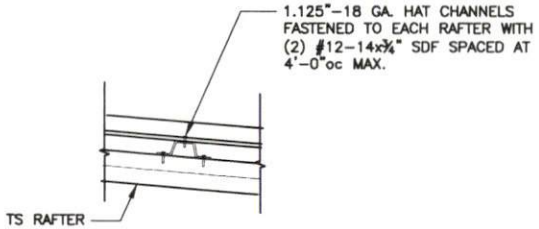

ROOF PANEL ATTACHMENT
NTS

SIDE WALL HEADER OPTIONS

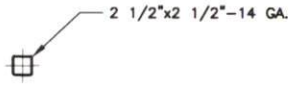

HEADER DETAIL FOR DOOR OPENINGS < 4'-0"
NTS

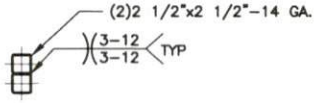

HEADER DETAIL FOR DOOR OPENINGS 4'-0" < TO < 12'-0"
NTS

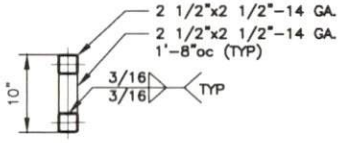

LACED HEADER DETAIL FOR DOOR OPENINGS 12'-1" < TO < 15'-0"
NTS

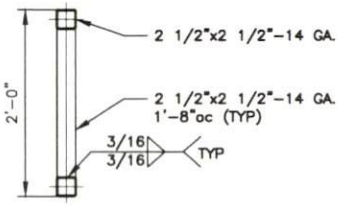

LACED HEADER DETAIL FOR DOOR OPENINGS 15'-1" < TO < 20'-0"

END WALL HEADER OPTIONS

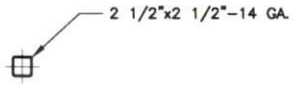

HEADER DETAIL FOR DOOR OPENINGS < 7'-0"
NTS

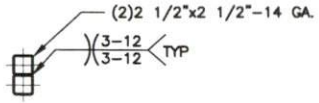

HEADER DETAIL FOR DOOR OPENINGS 7'-1" < TO < 16'-0"
NTS

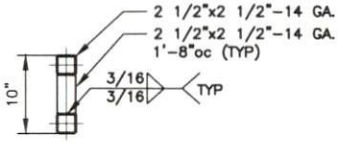

LACED HEADER DETAIL FOR DOOR OPENINGS 16'-1" < TO < 20'-0"
NTS

NOTE: THIS DRAWINGS ARE VALID FOR (1) CALENDER YEAR AFTER THE ISSUE DATE LISTED ON THE SHEET.

THIS DRAWING IS PRELIMINARY UNTIL SIGNED AND SEALED BY THE LICENSED PROFESSIONAL NOTED BELOW

PROFESSIONAL SEAL

DESIGN PROFESSIONAL
DOTec Engineering
118 N 2nd St.
St. Charles, MO 63301
Ph 636-724-9872
Fx 636-385-5059
WWW.DOTECENGINEERING.COM
INFO@DOTECENGINEERING.COM

ISSUE	DATE	DESCRIPTION

SHEET NAME
WALL HEADER DETAIL

ISSUE DATE 04.15.2025

CLIENT
HIGH QUALITY STEEL STRUCTURES

ADDRESS
2267 N Andy Griffith Parkway,
Mt Airy, NC 27030

SHEET NUMBER
S17

PROJECT NUMBER #2025-0021

DRAWN BY HMO

CHECKED BY MRC