DESIGN CRITERIA
1. 2018 NORTH CAROLINA STATE BUILDING CODES
2. ASCE 7-10
3. DESIGN LOADS
   --- LIVE LOAD (ROOF) = 20 PSF
   --- LIVE LOAD (CEILING-NO STORAGE) = 10 PSF
   --- LIVE LOAD (FLOOR) = 40 PSF
   --- GROUND SNOW LOAD = 15 PSF
   --- ULTIMATE WIND VELOCITY = 115 MPH
   --- EXPOSURE CATEGORY = B
   --- ASSUMED GROUND BEARING CAPACITY 12" BELOW GRADE: 2,000 PSF (CONTRACTOR RESPONSIBLE FOR VERIFICATION)

GENERAL NOTES
1. CONTRACTOR SHALL BE RESPONSIBLE FOR LOCATING AND PROTECTING EXISTING UNDERGROUND UTILITIES IN THE AREA OF CONSTRUCTION.
2. THE CONTRACTOR SHALL COORDINATE THEIR WORK ACTIVITIES WITH THE OWNER OR OWNER REPRESENTATIVE.
3. CONTRACTOR SHALL MAKE A CAREFUL INSPECTION OF THE SITE TO FAMILIARIZE HIM/HERSELF WITH THE ACTUAL CONDITIONS OF THE SITE PRIOR TO CONSTRUCTION.
4. CONTRACTOR SHALL CHECK AND VERIFY GIVEN DIMENSIONS, TAKE ADDITIONAL DIMENSIONS AS REQUIRED AND REPORT ANY INACCURACIES TO THE ENGINEER.
5. ALL WORK SHALL CONFORM TO THE THE CURRENT EDITIONS OF THE NORTH CAROLINA STATE BUILDING CODE. THE AISC CODE, THE ACI BUILDING CODE (ACI 318), THE AMERICAN WELDING SOCIETY CODE, ALL APPLICABLE ASTM STANDARDS, AND LOCAL GUIDELINES. IN CASES OF CONFLICT, THE MOST STRINGENT REQUIREMENT SHALL GOVERN.
6. CONTRACTOR SHALL COORDINATE AND VERIFY THE SIZE, LOCATION, TYPE, AND DIRECTION OF ALL PADS, DEPRESSIONS, BOLTS, SLEEVES, ANCHORS, INSERTS, OPENINGS, ETC. TO BE SET OR CAST IN CONCRETE OR MASONRY PRIOR TO PLACEMENT.
7. CONTRACTOR SHALL COORDINATE ALL DIMENSIONS WITH ARCHITECTURAL DRAWINGS PRIOR TO FOUNDATION LAYOUT AND FABRICATION OF ANY STRUCTURAL MEMBERS. DIMENSIONS SHOWN ARE BASED ON PRELIMINARY DRAWINGS PROVIDED BY THE ARCHITECT/CONTRACTOR AND/OR SITE INSPECTION. THESE DIMENSIONS SHOULD BE VERIFIED BY THE CONTRACTOR PRIOR TO CONSTRUCTION.
8. CONTRACTOR SHALL DESIGN AND INSTALL ALL TEMPORARY SHORING REQUIRED TO STABILIZE NEW AND EXISTING STRUCTURES AND FOUNDATIONS UNTIL CONSTRUCTION IS COMPLETE.
9. OMISSIONS OR CONFLICTS BETWEEN VARIOUS ELEMENTS OF THE DRAWINGS, SPECIFICATIONS, NOTES, AND DETAILS SHALL BE BROUGHT TO THE ATTENTION OF THE ENGINEER, AND RESOLVED BEFORE PROCEEDING WITH WORK.
10. THE DRAWINGS AND SPECIFICATIONS REPRESENT THE FINISHED STRUCTURE. THE STRUCTURE SHOWN IS STRUCTURALLY SOUND IN IT'S COMPLETED FORM ONLY. THEY DO NOT INDICATE THE METHOD OF CONSTRUCTION. THE CONTRACTOR SHALL PROVIDE ALL MEASURES NECESSARY TO PROTECT THE STRUCTURE DURING CONSTRUCTION.
11. APPLY TERMITE TREATMENT TO GROUND SURFACES WITHIN THE DEFINED SCOPE OF WORK AS REQUIRED BY CODE AND LOCAL BUILDING INSPECTOR.
12. ONLY SEALED DRAWINGS WITH MOST RECENT REVISIONS ARE APPLICABLE FOR CONSTRUCTION.
13. STRUCTURAL PLANS DO NOT INCORPORATE ADA, PLUMBING, MECHANICAL, ELECTRICAL, OR SITE FEATURES. ENGINEER'S SEAL APPLIES TO STRUCTURAL COMPONENTS ONLY.
14. SECTIONS AND DETAILS SHOWN AT LOCATIONS INDICATED ON PLAN ARE TYPICAL FOR OTHER SIMILAR CONDITIONS OF BUILDING, EVEN IF NO SECTION CUT IS INDICATED AT A SIMILAR CONDITION. CONTRACTOR IS RESPONSIBLE FOR COORDINATION OF ALL DETAILS WITH OTHER TRADES, DISCIPLINES, AND ALL SECTIONS AND DETAILS WITHIN STRUCTURAL DOCUMENTS. CONTRACTOR SHALL COORDINATE THESE STRUCTURAL DRAWINGS WITH DRAWINGS OF OTHER DISCIPLINES. SHOULD CONFLICTS OR DEVIATIONS BE NOTED, THEY SHOULD BE IMMEDIATELY BROUGHT TO THE ATTENTION OF SUBJECT DESIGNERS FOR REVIEW.
15. IN THE CASE WHERE NEW STRUCTURE IS INTEGRATED INTO EXISTING STRUCTURE, THE EXISTING STRUCTURE IS TO REMAIN UNMODIFIED UNLESS EXPLICITLY DESCRIBED IN THE DESIGN PLANS. ANY DAMAGE TO EXISTING STRUCTURE IDENTIFIED DURING CONSTRUCTION SHALL BE BROUGHT TO THE ATTENTION OF THE ENGINEER OR REVIEW PRIOR TO RESUMING WORK.
16. THE SCOPE OF THIS PROJECT IS CONTAINED IN THIS DRAWING AND WAS PERFORMED ON A FLAT RATE U.N.O. THE ENGINEER'S PROFESSIONAL LIMIT OF LIABILITY FOR THIS PROJECT IS 10 TIMES THE FEES COLLECTED.

SOIL FOUNDATIONS
1. ALL BOTTOM OF FOOTINGS SHALL BE CAST A MINIMUM OF 12" BELOW ORIGINAL GROUND LINE AND IN NO CASE ABOVE THE FROST LINE BASED ON 2018 NCBC AND LOCAL STANDARDS. NO FOOTINGS SHALL BE CAST ON LOOSE FILL MATERIAL.
2. ALL FILL SHALL BE PLACED IN 8" MAXIMUM LOOSE LIFTS AND SHALL BE COMPACTED TO A MINIMUM OF 95 PERCENT MAXIMUM DRY DENSITY AS DETERMINED IN ACCORDANCE WITH ASTM D-698 (STANDARD PROCTOR METHOD). THIS REQUIREMENT SHALL BE INCREASED TO 98 PERCENT OF ASTM D-698 IN THE FINAL FOOT BENEATH FLOOR SLABS AND PAVEMENTS.
3. ONCE FOOTINGS ARE ABLE TO HANDLE LATERAL LOADING, BACKFILL WITH ENGINEERED STONE OR NO. 57 STONE IN 8" UNIFORM LIFTS. EXTERIOR OF THE FOOTING MAY BE BACKFILLED WITH 8" UNIFORM LIFTS OF SUITABLE SOILS COMPACTED TO 95% OF THE DRY DENSITY BEYOND THE PLACEMENT OF THE FOOTING DRAIN.
4. A 10 MIL VAPOR BARRIER IS TO BE PLACED OVER THE ENTIRETY OF THE SUB-BASE, PRIOR TO PLACEMENT OF THE FLOOR INSULATION AND ANY CONCRETE SLAB-ON-GRADE. WITHIN CRAWL SPACES A MINIMUM 6-MIL VAPOR BARRIER SHALL BE INSTALLED ON BARE SOILS.

REINFORCING
1. ALL DETAILING, FABRICATION AND PLACING OF REINFORCING STEEL SHALL BE IN ACCORDANCE WITH THE LATEST "MANUAL OF STANDARD PRACTICE FOR DETAILING REINFORCED CONCRETE STRUCTURES," ACI 315.
2. CLEAR CONCRETE COVER OVER BARS SHALL BE 3" FOR FOOTINGS AND OTHER CONCRETE CAST AGAINST GROUND. CONCRETE COVER IN OTHER LOCATIONS TO BE A MINIMUM 1.5" (TYP. U.N.O.)
3. PROVIDE CORNER BARS AT ALL FOOTING STEPS AND CORNERS. THE REINFORCING BARS SHALL BE A MINIMUM OF 2'-6" LONG AND SHALL HAVE THE SAME SIZE AND SPACING AS THE HORIZONTAL REINFORCING.
4. LAP ALL SPLICES IN CONCRETE AS SPECIFICALLY CALLED FOR, BUT AT LEAST 48 BAR DIAMETERS FOR TENSION OR COMPRESSION, UNLESS NOTED OTHERWISE.
5. PROVIDE VERTICAL REINFORCEMENT IN FOUNDATION WALLS FOR UNBALANCED BACKFILL IN ACCORDANCE WITH APPLICABLE DESIGN DETAILS. WHERE NOT DETAILED IN PLAN, REINFORCEMENT SHALL BE INSTALLED PER TABLE R404.1.1(1) & (2) IN THE 2018 NCBC:RC.
6. REINFORCING BARS SHALL BE DEFORMED AND CONFORMING TO ASTM A615, GRADE 60.
7. WELDED WIRE FABRIC SHALL CONFORM TO ASTM A1064 AND BE SUPPLIED IN SHEETS, NOT ROLLS, U.N.O. MINIMUM 6X6 - W2.9 X W2.9 WELDED WIRE FABRIC. MINIMUM 1.5" FROM BOTTOM OF CONCRETE SLAB ON GRADES. AS AN ALTERNATIVE TO WELDED WIRE FABRIC REINFORCEMENT, FIBER REINFORCEMENT AT 1.5 POUNDS PER CUBIC YARD MAY BE UTILIZED.

CONCRETE NOTES
1. CONCRETE CONSTRUCTION SHALL COMPLY WITH ACI 301 "SPECIFICATIONS FOR STRUCTURAL CONCRETE FOR BUILDINGS" (LATEST EDITION), ACI 318 "BUILDING CODE REQUIREMENTS FOR REINFORCED CONCRETE" (LATEST EDITION), AND ACI 302 "GUIDE FOR CONCRETE FLOOR AND SLAB CONSTRUCTION" (LATEST EDITION).
2. MIX DESIGN SHALL BE IN ACCORDANCE WITH ACI 318 (CURRENT EDITION).
3. MINIMUM CEMENT CONTENT = 500 LBS PER CUBIC YARD.
4. CONCRETE SHALL BE NORMAL WEIGHT CONCRETE AND SHALL DEVELOP A MINIMUM COMPRESSIVE STRENGTH OF 3,000 PSI AT 28 DAYS (3,000 PSI FOR SLABS-ON-GRADE).
5. MAXIMUM SLUMP = 4" PLUS OR MINUS 1" PRIOR TO THE ADDITION OF ADMIXTURES.
6. THE MAX. AGGREGATE SIZE SHALL BE 3/4" UNLESS MIX DESIGN IS APPROVED BY ENGINEER PRIOR TO PLACEMENT.
7. CONCRETE AGGREGATES SHALL COMPLY WITH ASTM C33 AND SHALL BE FREE OF CLAY, FOAM, LUMPS, OR OTHER DELETERIOUS SUBSTANCES.
8. CONCRETE SHALL BE CONSOLIDATED USING CONCRETE VIBRATOR IN ACCORDANCE WITH ACI 309R-05.
9. EXTERIOR SLABS SHALL HAVE 6% ± 1% AIR ENTRAINMENT. DO NOT USE AIR ENTRAINMENT ON INTERIOR SLABS (3% MAXIMUM AIR ENTRAINMENT). AIR ENTRAINMENT SHALL COMPLY WITH ASTM C260.
10. THE CONTROL JOINT SPACING SHALL BE A MAXIMUM OF 12' OR AS SHOWN ON PLANS FOR A 4" THICK SLAB. PLACE CONTROL JOINTS TO AVOID RE-ENTRANT CORNERS. MAKE SAWCUTS TO FORM WEAKEN PLANE CONTROL JOINTS AS SOON AS POSSIBLE.

MASONRY NOTES
1. MORTAR MATERIALS:
   PORTLAND CEMENT, ASTM C150, TYPE 1
   MASONRY CEMENT, ASTM C91, TYPE "S" FOR STD. STRENGTH
   CMU, TYPE "M" FOR HIGH STRENGTH CMU
2. HORIZONTAL JOINT REINFORCEMENT
   --- 9 GAUGE, GALVANIZED STEEL WIRE, LADDER TYPE FOR MULTIPLE WYTHE WALLS, TRUSS TYPE FOR SINGLE WYTHE WALLS.
   --- LIGHTWEIGHT CONCRETE MASONRY UNITS SHALL CONFORM TO ASTM C90 FOR LOAD BEARING CONCRETE MASONRY UNITS. MINIMUM NET AREA COMPRESSIVE STRENGTH OF 1900 PSI. SEE DETAILS FOR LOCATIONS OF HIGH STRENGTH CMU (F'M = 4800 PSI).
3. GROUT FOR USE IN MASONRY WALLS SHALL CONFORM TO ASTM C476 WITH A MINIMUM COMPRESSIVE STRENGTH OF 3000 PSI AT 28 DAYS. GROUT MIX SHALL HAVE MAXIMUM SLUMP OF 8".
4. CONCRETE MASONRY UNITS SHALL BE LAID IN RUNNING BOND WITH FULL MORTAR COVERAGE ON HORIZONTAL AND VERTICAL FACE SHELLS AND WEBS. USE HORIZONTAL JOINT REINFORCEMENT AT 16" CENTERS IN ALL CMU WALLS, UNLESS NOTED OTHERWISE. GROUT SOLID ALL CELLS AND COURSES WITH BAR REINFORCEMENT AND GOUT SOLID ALL CELLS BELOW GRADE.
5. THE SPECIFICATIONS FOR THE DESIGN AND CONSTRUCTION OF LOAD BEARING CONCRETE MASONRY UNITS AS PUBLISHED BY THE NATIONAL CONCRETE MASONRY ASSOCIATION SHALL APPLY FOR ALL CONCRETE MASONRY UNITS, LOAD BEARING CONSTRUCTION.

GENERAL FRAMING DESIGN NOTES
1. FRAMING STANDARD: COMPLY WITH AF&PA'S "DETAILS FOR CONVENTIONAL WOOD FRAME CONSTRUCTION", UNLESS OTHERWISE INDICATED.
2. ALL EXTERIOR WALLS SHALL BE FRAMED WITH 2x4 STUDS SPACED AT 16" O.C., U.N.O. (MAXIMUM HEIGHT = 10'-0")
3. ALL INTERIOR WALLS SHALL BE FRAMED WITH 2X4 STUDS SPACED AT 16" O.C., U.N.O. (MAXIMUM HEIGHT = 10'-0")
4. ALL WALLS TO BE BALLOON FRAMED FROM BOTTOM PLATE TO TOP PLATE, U.N.O. SPECIAL CARE SHALL BE OBSERVED DURING CONSTRUCTION OF WALLS WITH STUDS GREATER THE 10' IN HEIGHT TO ENSURE CONTINUITY.
5. USE 12"-LONG 1/2" DIAMETER ANCHOR BOLTS, 7" MINIMUM EMBEDMENT IN CONCRETE, AT A MAXIMUM OF 6' ON CENTER AND A MAXIMUM OF 12" FROM CORNERS AND OPENINGS EXCEEDING 4' IN WIDTH.
6. NAIL 2X BOTTOM PLATE TO RIM JOIST BELOW WITH 16D NAILS AT 4" O/C SPACING.
7. METAL FRAMING ANCHORS: INSTALL METAL FRAMING ANCHORS TO COMPLY WITH MANUFACTURER'S WRITTEN INSTRUCTIONS.
   --- DO NOT SPLICE BUILT-UP BEAM MEMBERS BETWEEN SUPPORTS UNLESS OTHERWISE IN
8. WHERE BUILT-UP BEAMS OR GIRDERS OF 2-INCH NOMINAL DIMENSIONAL LUMBER ON EDGE ARE REQUIRED, FASTEN TOGETHER WITH 3 ROWS OF 16D NAILS SPACED NOT LESS THAN 24" O.C. LOCATED ONE ROW 1.5" FROM TOP EDGE AND ONE ROW 1.5" FROM BOTTOM EDGE.
9. WHERE MULTI-PLY LVL BEAMS ARE REQUIRED, FASTEN TOGETHER WITH 2 ROWS OF FASTENMASTER FLATLOK STRUCTURAL WOOD SCREWS, EACH ROW SPACED 16". USE 3.5" LONG FLATLOK SWS FOR 2-PLY LVL; USE 5" LONG SWS FOR 3-PLY LVL; USE 6.5" LONG FLATLOK SWS FOR 4-PLY LVL. LONGER SCREWS SHALL BE NECESSARY IF PLYWOOD OR OSB SPACERS ARE INSTALLED BETWEEN LVL PLIES.
10. FOR BUILT-UP (GANG) COLUMNS, CONNECT EACH PLY W/ (2) ROWS OF 10D NAILS AT 12" O/C. PROVIDE HORIZONTAL STRAPPING FOR COLUMN PLIES GREATER THAN 3.
11. INSTALL EQUIVALENT, SOLID BLOCKING BELOW ALL STUD GROUPS TO ENSURE CONTINUOUS LOAD PATH TO THE FOUNDATION.
12. FLOOR TO FLOOR STRAP TIES: LAP EXTERIOR SHEATHING PANELS AT LEAST 24" ABOVE BOTTOM PLATE OR BELOW TOP PLATE.
13. SEE FRAMING PLANS FOR ALL BEARING HEADER SIZES. MINIMUM HEADER SIZE 2-2x8 (U.N.O.).
14. ALL ROOF FRAMING MUST BE TIED TO THE FRAMING BELOW WITH SIMPSON H2.5A TIES, TRUSS SCREWS, OR EQUIVALENT FASTENING MECHANISM.
15. ALL LUMBER EXPOSED TO CONCRETE/MASONRY OR WEATHER MUST BE PRESSURE TREATED.
16. ALL FASTENERS/METAL HARDWARE EXPOSED TO WEATHER MUST BE GALVANIZED.
17. ALL FASTENING SHALL CONFORM TO TABLE R602.3(1) IN THE 2018 NCBC:RC.
18. ALL DECK FRAMING COMPONENTS ARE TO BE INSTALLED PER 2018 NCBC:RC APPENDIX M.
19. PROVIDE KING STUDS AT NEW EXTERIOR OPENINGS PER 2018 NCBC:RC TABLE R602.3(5) SUBNOTE "d". "ONE HALF OF THE STUDS INTERRUPTED BY A WALL OPENING SHALL BE PLACE IMMEDIATELY OUTSIDE THE JACK STUDS ON EACH SIDE OF THE OPENING AS KING STUDS ... KING STUDS SHALL EXTEND FULL HEIGHT FROM SOLE PLATE TO TOP PLATE OF WALL"
20. PROVIDE SIMPSON LUS HANGERS AT FLUSH CONNECTIONS FOR FLOOR FRAMING U.N.O.
21. PROVIDE DOUBLE JOISTS BELOW INTERIOR WALLS PARALLEL TO THE FLOOR FRAMING U.N.O.
22. PROVIDE STEEL ANGLE LINTELS ABOVE EXTERIOR OPENINGS TO SUPPORT MASONRY VENEER PER TABLE R703.8.3.1.

DIMENSIONAL LUMBER FRAMING
1. MAXIMUM MOISTURE CONTENT: 19%.
2. NO. 2 GRADE OR BETTER (EXCEPT STUD WALLS) AND ANY OF THE FOLLOWING SPECIES:
   --- HEM-FIR (NORTH), NLGA.
   --- SOUTHERN PINE, SPIB.
   --- DOUGLAS FIR-LARCH, WCLIB OR WWPA.
   --- MIXED SOUTHERN PINE, SPIB.
   --- SPRUCE-PINE-FIR, NLGA.
   --- DOUGLAS FIR-SOUTH, WWPA.
   --- HEM-FIR, WCLIB OR WWPA.
   --- DOUGLAS FIR-LARCH (NORTH), NLGA.
3. EXTERIOR, LOAD BEARING AND INTERIOR PARTITION WALLS: ANY SPECIES (STUD GRADE OR BETTER) WITH A MODULUS OF ELASTICITY OF AT LEAST 1,300,000 PSI AND EXTREME FIBER STRESS IN BENDING OF AT LEAST 650 PSI FOR 2" NOMINAL THICKNESS AND 12" NOMINAL WIDTH FOR A SINGLE MEMBER USE.
4. JOISTS, RAFTERS, AND OTHER FRAMING NOT LISTED ABOVE: ANY SPECIES (NO. 2 OR BETTER) WITH A MODULUS OF ELASTICITY OF AT LEAST 1,300,000 PSI AND AN EXTREME FIBER STRESS IN BENDING OF AT LEAST 850 PSI FOR 2" NOMINAL THICKNESS AND 12" NOMINAL WIDTH FOR SINGLE MEMBER USE.
5. USE ONLY KILN DRIED PRESSURE TREATED 2X FOR BLOCKING AT PIERS.

ENGINEERED WOOD PRODUCTS
1. LAMINATED VENEER LUMBER: STRUCTURAL COMPOSITE LUMBER MADE FROM WOOD VENEERS WITH GRAIN PRIMARILY PARALLEL TO MEMBER LENGTHS, EVALUATED AND MONITORED ACCORDING TO ASTM D5456 AND MANUFACTURED WITH AN EXTERIOR-TYPE ADHESIVE COMPLYING WITH ASTM D2559 AND CONTAINING NO UREA FORMALDEHYDE.
2. AVAILABLE MANUFACTURERS: SUBJECTS TO COMPLIANCE WITH REQUIREMENTS, MANUFACTURERS OFFERING PRODUCTS THAT MAY BE INCORPORATED INTO THE WORK INCLUDE, BUT ARE NOT LIMITED TO, THE FOLLOWING:
   --- BOISE CASCADE CORPORATION
   --- GEORGIA-PACIFIC
   --- LOUISIANA-PACIFIC CORPORATION
   --- ROSEBURG FOREST PRODUCTS CO.
   --- WELDWOOD OF CANADA LIMITED, SUBSIDIARY OF INTERNATIONAL PAPER COMPANY
   --- WEYERHAEUSER COMPANY
   EXTREME FIBER STRESS IN BENDING, EDGEWISE: 3,000 PSI FOR 12" NOMINAL DEPTH MEMBERS.
   MODULUS OF ELASTICITY, EDGEWISE: 2,000,000 PSI.
3. WRAPPING, WEATHER PROOFING, AND FLASHING REQUIREMENTS/SPECIFICATIONS AT ENGINEERED WOOD MEMBERS SHALL BE DETERMINED BY OTHERS.
4. PARALLEL-STRAND LUMBER: STRUCTURAL COMPOSITE LUMBER MADE FROM WOOD STAND ELEMENTS WITH GRAIN PRIMARILY PARALLEL TO MEMBER LENGTHS, EVALUATED AND MONITORED ACCORDING TO ASTM D5456 AND MANUFACTURED WITH AN EXTERIOR-TYPE ADHESIVE COMPLYING WITH ASTM D2559 AND CONTAINING NO UREA FORMALDEHYDE.
   EXTREME FIBER STRESS IN BENDING, EDGEWISE: 2,900 PSI FOR 12" NOMINAL DEPTH MEMBERS.
   MODULUS OF ELASTICITY, EDGEWISE: 2,200,000 PSI.

SHEATHING DESIGN NOTES
1. UNLESS NOTED OTHERWISE: SHEATH ROOF AND WALLS WITH EXPOSURE 1, 7/16"-THICK APA RATED OSB (SPAN RATING 32/16) WITH 8D NAILS AT 6" O/C EDGES, 12" O/C FIELD, BLOCKING NOT REQUIRED AT PANEL EDGES AT ROOF SHEATHING.
2. WHERE TOP CHORD IS DISCONTINUOUS, APPLY MSTC40 STRAP TO COMPLETE THE TENSILE LOAD PATH. POSITION TOP CHORD SPLICES OVER WALL STUDS.
3. INSTALL "H" CLIPS AT PANEL EDGES BETWEEN EACH RAFTER/TRUSS FOR ALL ROOF SHEATHING WITH RAFTER SPACING GREATER THAN 24".
4. NAIL ALL SHEATHING AT GABLE AND EAVE ROOF OVERHANGS WITH 8D NAILS AT 6" O/C EDGES, 6" O/C FIELD.
5. NAIL ALL SHEATHING AT PERIMETER AND PEAK OF ROOF WITH 8D NAILS AT 6" O/C EDGES, 6" O/C FIELD.
6. NAIL ALL SHEATHING WITHIN 4'-0" OF WALL CORNERS WITH 8D NAILS AT 6" O/C EDGES, 12" O/C FIELD.
7. SUBFLOORING SHALL BE IN ACCORDANCE WITH TABLE R503.1 WITHIN RESIDENTIAL BUILDING CODE OR ENGINEER APPROVED ALTERNATIVE.
8. MEMBERS AND BLOCKING AT ADJOINING PANEL EDGES SHALL BE MINIMUM 3" NOMINAL OR DOUBLE 2" NOMINAL WITH STAGGERED NAILING AT ALL PANEL EDGES.
9. HORIZONTAL BLOCKING MAY BE 2X LAID FLAT AGAINST SHEATHING.
10. AT EXISTING STRUCTURE WHERE SHEATHING IS IN PLANE, NEW SHEATHING SHALL BE KEYED IN A MINIMUM OF 2' WITHIN EVERY OTHER SHEATHING PANEL.

FASTENERS
1. PROVIDE FASTENERS OF SIZE AND TYPE INDICATED THAT COMPLY WITH REQUIREMENTS SPECIFIED IN THIS ARTICLE FOR MATERIAL AND MANUFACTURER.
2. WHERE ROUGH CARPENTRY IS EXPOSED TO WEATHER, IN GROUND CONTACT, OR IN AREA OF HIGH RELATIVE HUMIDITY, PROVIDE FASTENERS WITH HOT-DIPPED ZINC COATING COMPLYING WITH ASTM A153 A153M.
3. POWER DRIVEN FASTENERS: CABO NER-272
   WOOD SCREWS: ASTM B18.6.1
   LAG BOLTS: ASME B18.2.1
BOLTS: STEEL BOLTS COMPLYING WITH ASTM A-307, GRADE 1 (ASTM F568M, PROPERTY CLASS 4.6); WITH ASTM A563 (ASTM A563M) HEX NUTS AND, WHERE INDICATED, FLAT WASHERS.
4. EXPANSION ANCHORS: ANCHOR BOLTS AND SLEEVE ASSEMBLY OF MATERIAL INDICATED BELOW WITH CAPABILITY TO SUSTAIN, WITHOUT FAILURE, A LOAD EQUAL TO 6 TIMES THE LOAD IMPOSED WHEN INSTALLED IN UNIT MASONRY ASSEMBLIES AND EQUAL TO 4 TIMES THE LOAD IMPOSED WHEN INSTALLED IN CONCRETE AS DETERMINED BY TESTING PER ASTM E488 CONDUCTED BY A QUALIFIED INDEPENDENT TESTING AND INSPECTING AGENCY.
5. MATERIAL: CARBON-STEEL COMPONENTS, ZINC PLATED TO COMPLY WITH ASTM B633, CASS FE/ZN 5.

EPOXY ADHESIVE ANCHORS
1. ALL EPOXY SHALL BE SIMPSON BRAND "SET" EPOXY SYSTEM, OR APPROVED EQUAL, UNLESS NOTED OTHERWISE.
2. EPOXY ADHESIVES TO BE INSTALLED IN STRICT ACCORDANCE WITH MANUFACTURER'S SPECIFICATIONS AND INSTRUCTIONS.
3. ALL EPOXY ANCHOR BOLTS TO BE SIZED AS SHOWN IN NOTES/DETAILS AND SHALL CONFORM TO THE FOLLOWING:
   --- ANCHOR BOLTS INTO FOUNDATION: ASTM F1554, GRADE 36
   --- ALL OTHER APPLICATIONS: ASTM 307, U.N.O.
4. ALL EPOXY ANCHOR BOLTS AND REBAR DOWELS SHOULD BE CLEAN AND OIL FREE.
5. CONCRETE DUST SHALL BE REMOVED FROM ALL DRILLED HOLES BY USE OF A NYLON BRUSH AND OIL FREE COMPRESSED AIR. CORRECT PROCEDURE INVOLVES BLOWING THE DUST OUT OF THE HOLE, BRUSHING THE HOLE CLEAN, AND THEN BLOWING AGAIN.
6. DRILLED HOLES SHALL BE KEPT DRY AND ANY STANDING WATER MUST BE BLOWN OUT WITH OIL FREE COMPRESSED AIR AND ALLOWED TO DRY PRIOR TO EPOXY INSTALLATION.
7. EPOXY SHALL NOT BE INSTALLED IN CONCRETE WHICH IS LESS THAN 7 DAYS OLD.
8. EPOXY ADHESIVES MUST BE ALLOWED THE FULL CURE TIME AS SPECIFIED BY THE MANUFACTURER PRIOR TO APPLICATION OF ANY LOAD AND ANCHOR BOLTS OR REBAR DOWELS MUST REMAIN UNDISTURBED DURING THIS SETTING PERIOD.
9. EPOXY ADHESIVE ANCHORS ARE NOT TO BE USED EXCEPT WHERE SPECIFICALLY INDICATED ON PLANS.

SHEET INDEX

S1	COVER SHEET AND GENERAL NOTES
S2	FOUNDATION AND FIRST FLOOR FRAMING PLANS AND DETAILS
S3	FIRST AND SECOND FLOOR CEILING FRAMING PLANS & DETAILS
S4	ROOF FRAMING PLANS & DETAILS

TYPICAL ABBREVIATIONS

&	= AND	GA.	= GAUGE
@	= AT	HT.	= HEIGHT
A/E	= ARCHITECT/ENGINEER	MAX.	= MAXIMUM
A.	= ARCHITECTURAL	MECH.	= MECHANICAL
B.O.	= BY OTHERS	MFR.	= MANUFACTURER
B.P.	= CEILING JOIST	MIN.	= MINIMUM
C.L.	= CENTER LINE	N.T.S.	= NOT TO SCALE
C.M.U.	= CONCRETE MASONRY UNIT	O.C.	= ON CENTER
CONC.	= CONCRETE	P.A.F.	= POWER ACTUATED FASTENER
CONT.	= CONTINUOUS	PL	= PLATE
DEFL.	= DEFLECTION	REQ.	= REQUIRED
DIA.	= DIAMETER	SIM.	= SIMILAR
DWG.	= DRAWING	STL.	= STEEL
ELEV.	= ELEVATION	SW	= SHEAR WALL
ENGR.	= ENGINEER	STR.	= STRUCTURAL
E.O.S.	= EDGE OF SLAB	TEMP.	= TEMPORARY
EQ.	= EQUAL	TYP.	= TYPICAL
EW	= EACH WAY	U.N.O.	= UNLESS NOTED OTHERWISE
EX.	= EXISTING	VERT.	= VERTICAL
FLR.	= FLOOR	W/	= WITH
F.J.	= FLOOR JOISTS		

JACK STUD SCHEDULE (U.N.O.)

OPENING < 4'-0"	1
OPENING < 6-0"	2
OPENING < 12-0" OR LVL BEAMS	3

NOTE: PROVIDE KING STUDS AT NEW EXTERIOR OPENINGS PER 2018 NCBC:RC TABLE R602.3(5) SUBNOTE "d". "ONE HALF OF THE STUDS INTERRUPTED BY A WALL OPENING SHALL BE PLACE IMMEDIATELY OUTSIDE THE JACK STUDS ON EACH SIDE OF THE OPENING AS KING STUDS ... KING STUDS SHALL EXTEND FULL HEIGHT FROM SOLE PLATE TO TOP PLATE OF WALL"

NORTH CAROLINA PROFESSIONAL SEAL 052317 ENGINEER SEAN R. CASADY
06/13/24

BUILT UP ENGINEERS
7283 NC HWY 42 W STE: 102-148 RALEIGH, NC 27604,
P: 919-917-9915
NC LICENSE NO. P-2664

JASON JASON CONSTRUCTION
ADDITION STRUCTURAL PLANS
5964 RAWLS CHURCH RD.
FUQUAY-VARINA, NC

REVISIONS

NO.	DATE	DESCRIPTION
0	06.13.2024	FOR CONSTRUCTION

SCALE:	AS SHOWN
REVIEWED BY:	SRC
DRAWN BY:	SRC
DATE:	JUNE 13, 2024

S1.0

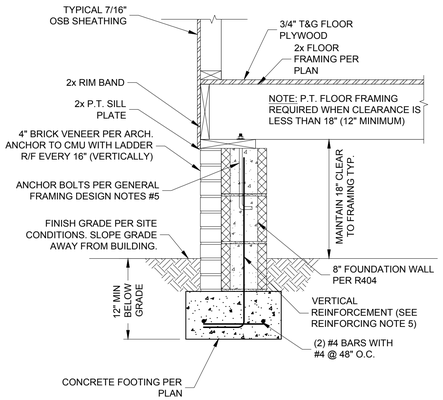

1 S2.0 TYP. FOUNDATION WALL SECTION

SCALE: N.T.S.

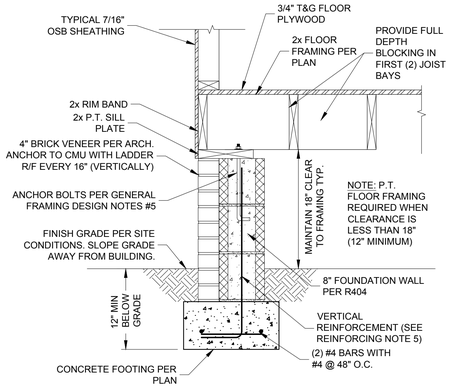

2 S2.0 TYP. BLOCKING AT FLOOR FRAMING

SCALE: N.T.S.

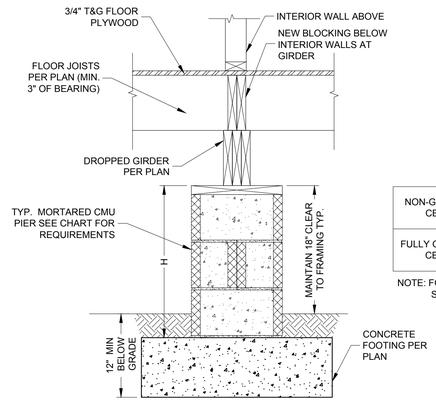

NOTE: CONTRACTOR'S OPTION TO DO FLUSH GIRDER WITH SIMPSON LUS JOIST HANGERS

	PIER SIZE	MAX. PIER HEIGHT (H)
NON-GROUTED CELLS	8x16	2'-8"
	16x16	5'-4"
FULLY GROUTED CELLS	8x16	6'-8"
	16x16	13'-4"

NOTE: FOR NON-GROUTED PIERS, PROVIDE 4" SOLID CAP BLOCK

3 S2.0 TYP. CMU PIER AND GIRDER IN CRAWL SPACE

SCALE: N.T.S.

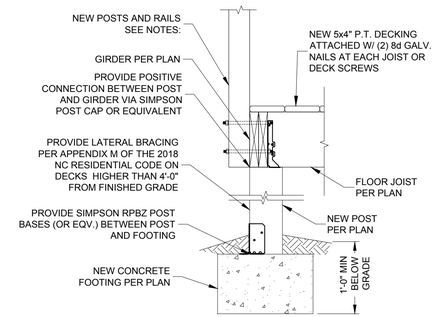

DECK NOTES (PER AM111):

1. RAIL POSTS - PROVIDE 4x4 PRESSURE TREATED RAIL POSTS AT 8'-0" ON-CENTER MAX ATTACHED TO OUTER BAND WITH (2) 3/8" DIA. GALVANIZED BOLTS WITH NUT AND WASHER
2. GUARDS - INSTALLED A MINIMUM 36" FROM DECKING WITH 30" DROP AND OPENING LIMITS PER R312.3. PROVIDE 2x4 TOP AND BOTTOM RAILS WITH FLAT 2x4 CAP RAIL.
3. STAIR HANDRAIL/GUARD - INSTALLED AT A HEIGHT BETWEEN 34" AND 38". OPENING ALONG SIDE OF STAIRS SHALL NOT ALLOW A 4-3/8" DIA. SPHERE TO PASS.
4. STAIRS - TREADS AND RISERS - MAXIMUM RISER 8 -1/4" WITH 9" MINIMUM TREAD DEPTH. STAIRWAYS TO BE A MINIMUM OF 36" WIDE

4 S2.0 TYP. DECK FRAMING CONNECTIONS

SCALE: N.T.S.

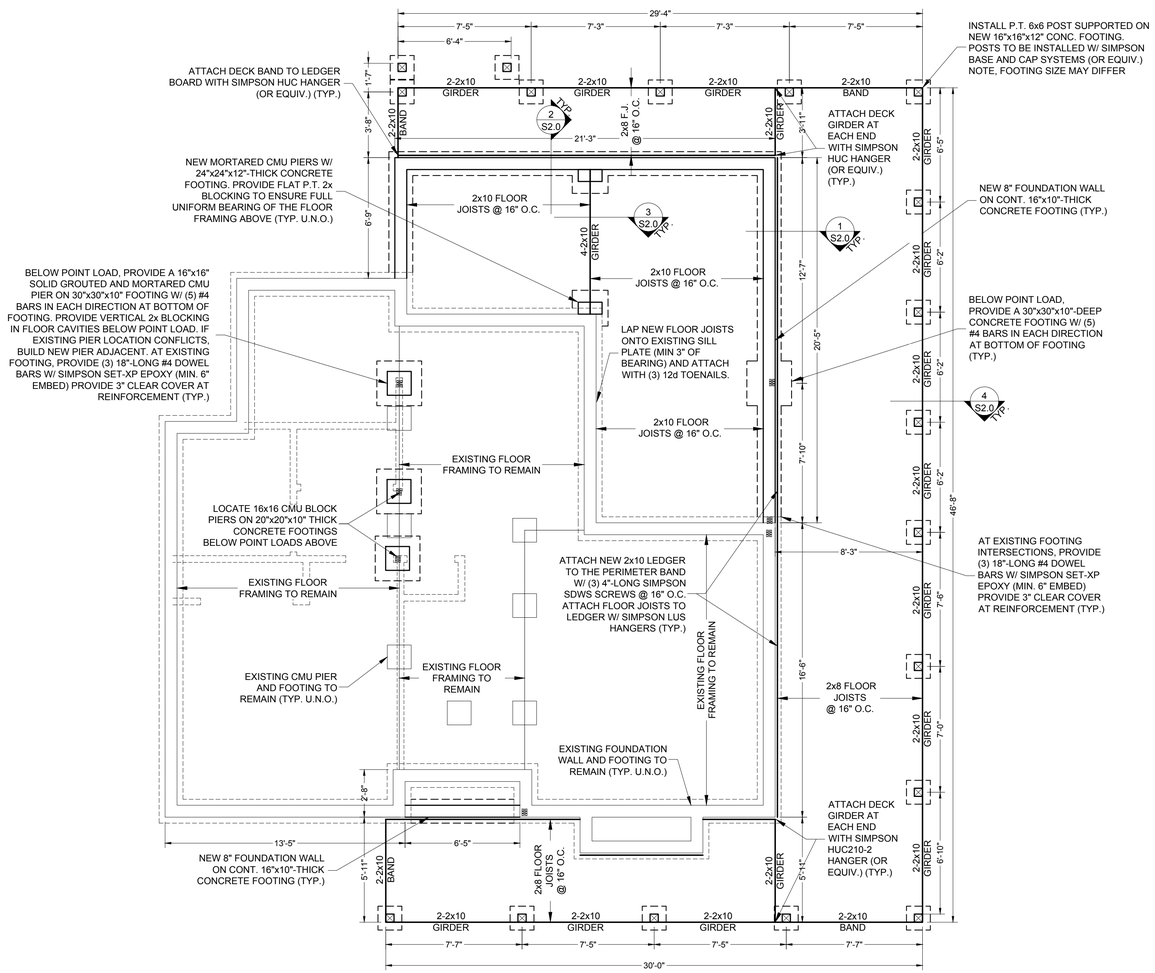

FOUNDATION AND FIRST FLOOR FRAMING PLAN

SCALE: 1/4" = 1'-0"

NORTH CAROLINA PROFESSIONAL SEAL 052317 ENGINEER SEAN R. CASADY 06/13/24

BUILT UP ENGINEERS
7283 NC HWY 42 W STE. 102-148 RALEIGH, NC 27604,
P: 919-917-9915
NC LICENSE NO. P-2664

JASON JASON CONSTRUCTION
ADDITION STRUCTURAL PLANS
5964 RAWLS CHURCH RD.
FUQUAY-VARINA, NC

REVISIONS

NO.	DATE	DESCRIPTION
0	06.13.2024	FOR CONSTRUCTION

SCALE:	AS SHOWN
REVIEWED BY:	SRC
DRAWN BY:	SRC
DATE:	JUNE 13, 2024

S2.0

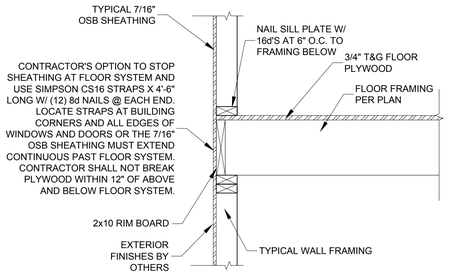

1 S3.0 TYP. SECOND FLOOR FRAMING

SCALE: N.T.S.

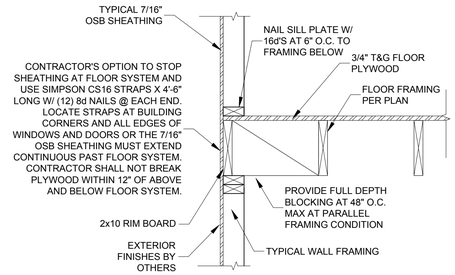

2 S3.0 TYP. FLOOR BLOCKING (PARALLEL)

SCALE: N.T.S.

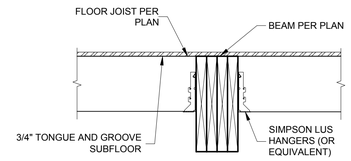

3 S3.0 TYP. STEEL FLUSH BEAM DETAIL

SCALE: N.T.S.

4 S3.0 NOT USED

SCALE: N.T.S.

JACK STUD SCHEDULE (U.N.O.)

OPENING < 4'-0"	1
OPENING < 6-0"	2
OPENING < 12-0" OR LVL BEAMS	3

NOTE: PROVIDE KING STUDS AT NEW EXTERIOR OPENINGS PER 2018 NCBC:RC TABLE R602.3(5) SUBNOTE "d": "ONE HALF OF THE STUDS INTERRUPTED BY A WALL OPENING SHALL BE PLACE IMMEDIATELY OUTSIDE THE JACK STUDS ON EACH SIDE OF THE OPENING AS KING STUDS ... KING STUDS SHALL EXTEND FULL HEIGHT FROM SOLE PLATE TO TOP PLATE OF WALL"

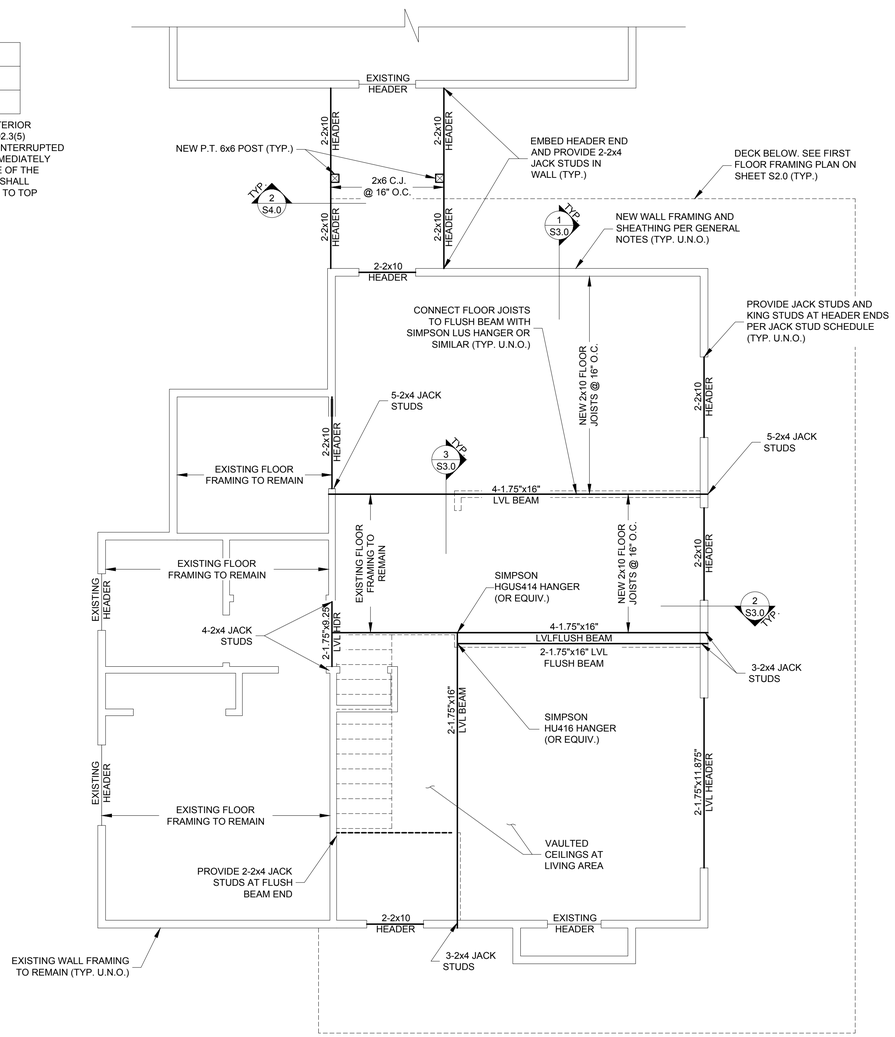

FIRST FLOOR CEILING FRAMING PLAN

SCALE: 1/4" = 1'-0"

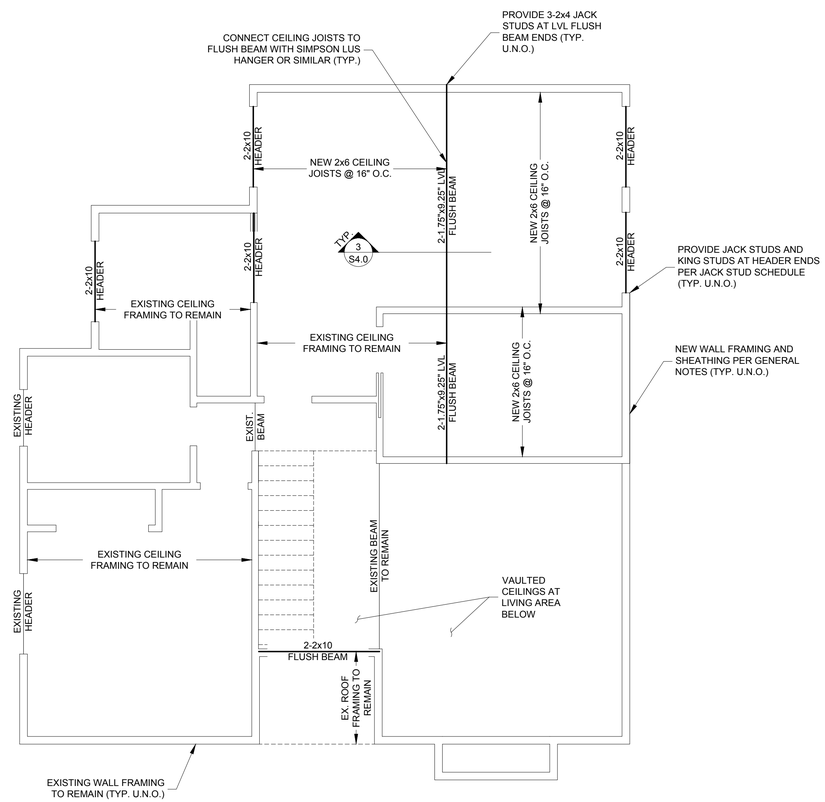

SECOND FLOOR CEILING FRAMING PLAN

SCALE: 1/4" = 1'-0"

NORTH CAROLINA PROFESSIONAL SEAL 052317 ENGINEER SEAN R. CASADY 06/13/24

BUILT UP ENGINEERS
7283 NC HWY 42 W STE: 102-148 RALEIGH, NC 27604,
P: 919-817-9915
NC LICENSE NO. P-2664

JASON JASON CONSTRUCTION
ADDITION STRUCTURAL PLANS
5964 RAWLS CHURCH RD.
FUQUAY-VARINA, NC

REVISIONS

NO.	DATE	DESCRIPTION
0	06.13.2024	FOR CONSTRUCTION

SCALE:	AS SHOWN
REVIEWED BY:	SRC
DRAWN BY:	SRC
DATE:	JUNE 13, 2024

S3.0

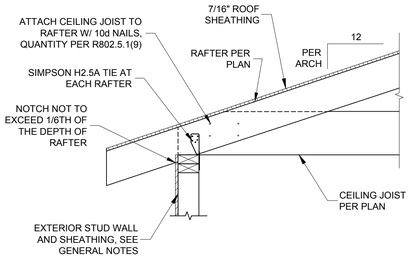

1 S4.0 TYP. RAFTER AT EXTERIOR WALL

SCALE: N.T.S.

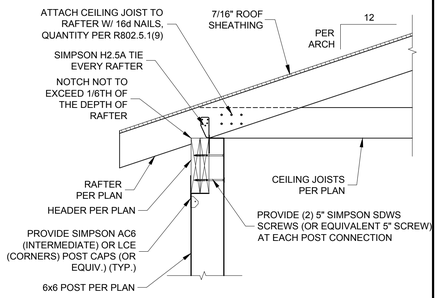

2 S4.0 TYP. BREEZEWAY ROOF FRAMING

SCALE: N.T.S.

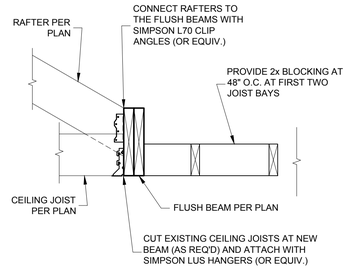

3 S4.0 TYP. CEILING FLUSH BEAM

SCALE: N.T.S.

4 S4.0 NOT USED

SCALE: N.T.S.

5 S4.0 NOT USED

SCALE: N.T.S.

JACK STUD SCHEDULE (U.N.O.)

OPENING < 4'-0"	1
OPENING < 6-0"	2
OPENING < 12-0" OR LVL BEAMS	3

NOTE: PROVIDE KING STUDS AT NEW EXTERIOR OPENINGS PER 2018 NCBC:RC TABLE R602.3(5) SUBNOTE "d". "ONE HALF OF THE STUDS INTERRUPTED BY A WALL OPENING SHALL BE PLACE IMMEDIATELY OUTSIDE THE JACK STUDS ON EACH SIDE OF THE OPENING AS KING STUDS ... KING STUDS SHALL EXTEND FULL HEIGHT FROM SOLE PLATE TO TOP PLATE OF WALL"

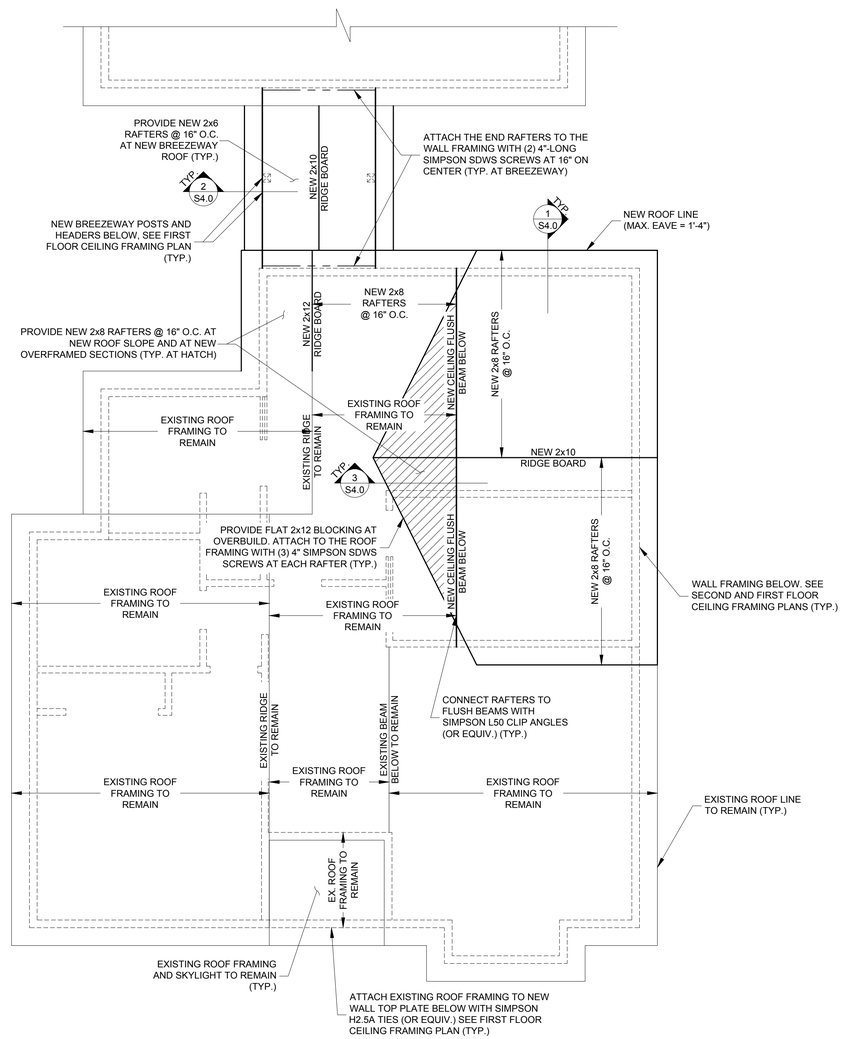

ROOF FRAMING PLAN

SCALE: 1/4" = 1'-0"

NORTH CAROLINA PROFESSIONAL SEAL 052317 ENGINEER JEAN R. CASADY 06/13/24

BUILT UP ENGINEERS
7283 NC HWY 42 W STE: 102-148 RALEIGH, NC 27604,
P: 919-817-9915
NC LICENSE NO. P-2664

JASON JASON CONSTRUCTION
ADDITION STRUCTURAL PLANS
5964 RAWLS CHURCH RD.
FUQUAY-VARINA, NC

REVISIONS

NO.	DATE	DESCRIPTION
0	06.13.2024	FOR CONSTRUCTION

SCALE:	AS SHOWN
REVIEWED BY:	SRC
DRAWN BY:	SRC
DATE:	JUNE 13, 2024

S4.0