TrueHomes

IT'S ALL ABOUT U

BUIES CREEK TOWNHOMES

THE 'LUCAS TH'

LOTS 53-58

INTEGRITY COLLECTION

ADDRESS
LILLINGTON, NC

COMMUNITY SPECS
(Detailed listing of all Community Specifications can be found in Showroom Selections)

- MONO FOUNDATION w/ INSULATION
- VINYL SIDING
- CEMENT SOFFIT
- CEMENT PORCH CEILINGS
- ALUMINUM COIL WRAPPED 6" FASCIA
- HVAC LOCATION REAR

HELP HOTLINES
"WHEN IN DOUBT, GIVE US A SHOUT"

TRUE BUILDER:
(To be filled in by Builder on site)

NAME: _____

NUMBER: _____

ARCHITECTURAL SERVICES:
- Missing or Conflicting Dimensions
- Plan Legibility
- Missing Options

Mon-Fri: 8am - 5pm
CHARLOTTE MKTS: 704-681-2032
ALL OTHER MKTS: 704-993-1861
E-mail: CADISSUE@truehomesusa.com

ESTIMATING:
- Missing Material or Shortage
- Purchase Order Questions

Mon-Fri: 8am - 5pm
ALL MKTS: 704-681-4916

TABLE OF CONTENTS

CS	COVER SHEET
SF1	SLAB FORMWORK PLAN
S1	MONO FOUNDATION PLAN
S2	LOWER LEVEL FRAMING PLAN
S2.1	LOWER LEVEL BRACED WALL PLAN
S3	UPPER LEVEL FRAMING PLAN
S3.1	UPPER LEVEL BRACED WALL PLAN
A1	LOWER LEVEL FLOOR PLAN
A2	UPPER LEVEL FLOOR PLAN
A4.1	FRONT ELEVATIONS
A4.2	REAR ELEVATIONS
E1	LOWER LEVEL ELECTRICAL PLAN
E2	UPPER LEVEL ELECTRICAL PLAN
D1	MONO FOUNDATION DETAILS
D2	AREA SEPARATION WALL DETAILS
D3	UL RATED WALL DETAILS
D4	DOOR / WINDOW DETAILS
D5	FLASHING DETAILS
D5.1	STAIR DETAILS
D5.2	STAIR DETAILS
D5.3	STAIR DETAILS
D6	FRAMING DETAILS
D7	MISC. DETAILS
D8	GENERAL NOTES
D9	GENERAL NOTES
D10	EAVE & CORNICE DETAILS
D11	EXTERIOR SPECIFIC DETAILS
D12	EXTERIOR SPECIFIC DETAILS
D13	STAIR SECTIONS & MISC. DETAILS
D14	PORTAL FRAME DETAILS

SQ. FOOTAGE

LOWER LEVEL	680 SQ.FT.
UPPER LEVEL	680 SQ.FT.
TOTAL LIVABLE	1360 SQ.FT.
FRONT PORCH (FULL)	108 SQ.FT.
FRONT PORCH (PARTIAL)	24 SQ.FT.
REAR PATIO	100 SQ.FT.

HEADER SCHEDULE

ALL INTERIOR BEARING AND EXTERIOR WALLS
1. SPANS UP TO 3'-6" -- (2) 2x8's
2. SPANS 3'-6" TO 6'-6" -- (2) 2x10's
3. SPANS 6'-6" OR MORE -- SEE PLAN

** SOUTH CAROLINA SPECIFIC NOTE **
ALL OPENINGS IN THERMAL ENVELOPE MUST HAVE INSULATED HEADER PER CODE

EXTERIOR HINGED DOOR SCHEDULE

DOOR WIDTH		DOOR HEIGHT R.O.		
PLAN I.D.	R.O. WIDTH	8FT CEILING	9FT CEILING	10FT CEILING
3/0	3'-2 1/2"	82-1/2"	82-1/2"	98-1/2"
2/8	2'-10 1/2"			
5/0	5'-3 5/8"			
5/4	5'-7 5/8"			
6/0	6'-3 5/8"			
SLIDING PATIO DOORS				
5/0	4'-11 1/2"	80"	80"	96"
6/0	5'-11 1/2"			

INTERIOR HINGED DOOR SCHEDULE

DOOR WIDTH		DOOR HEIGHT R.O.		
PLAN I.D.	R.O. WIDTH	8FT CEILING	9FT CEILING	10FT CEILING
1/4	1'-6"	82-1/2" (6'-8" NOMINAL DOOR HEIGHT +2-1/2")	82-1/2" (6'-8" NOMINAL DOOR HEIGHT +2-1/2")	98-1/2" (8'-0" NOMINAL DOOR HEIGHT +2-1/2")
1/6	1'-8"			
1/8	1'-10"			
2/0	2'-2"			
2/4	2'-6"			
2/6	2'-8"			
2/8	2'-10"			
2/10	3'-0"			
3/0	3'-2"			
4/0	4'-2"			
5/0	5'-2"			
6/0	6'-2"			

◇ LOAD BEARING ◯ NON-LOAD BEARING

INTERIOR PASS THRU SCHEDULE

FRAMED OPENING DIMENSIONS		
WALL HEIGHT	R.O. WIDTH	R.O. HEIGHT
8'-1 1/8"	PLAN I.D. +2"	82-1/2"
9'-1 1/8"	PLAN I.D. +2"	94-1/2"
10'-1 1/8"	PLAN I.D. +2"	98-1/2"

ROUGH OPENING HEIGHTS ARE FOR DO, CO, & AO OPENINGS. SHIM HEIGHTS AS NEEDED TO MATCH INTERIOR HINGED DOOR CASING

INTERIOR DOORWAY OPENINGS:
DO = DRYWALL OPENING
CO = CASED OPENING
AO = ARCHED OPENING

GENERAL NOTES

1. PLANS PERMITTED IN NORTH CAROLINA ARE DESIGNED TO MEET THE 2018 NORTH CAROLINA RESIDENTIAL BUILDING CODE, AS ISSUED BY THE STATE OF NORTH CAROLINA, AND PLANS PERMITTED IN SOUTH CAROLINA DESIGNED TO MEET 2021 SOUTH CAROLINA RESIDENTIAL BUILDING CODE AS ISSUED BY THE STATE OF SOUTH CAROLINA, WITH MODIFICATIONS AS REQUIRED TO MEET LOCAL BUILDING CODES FOR EACH APPLICABLE JURISDICTION.
2. DO NOT SCALE DIMENSIONS FROM PRINTS. USE DIMENSIONS GIVEN OR CONSULT ARCHITECTURAL SERVICES DEPARTMENT FOR FURTHER CLARIFICATION.
3. ALL DIMENSIONS ARE FROM WALL FRAMING (FACE OF STUD), NO FINISHED DIMENSIONS ARE GIVEN U.N.O.
4. ALL INTERIOR NON-LOAD BEARING WALLS TO BE 2x4 STUDS @ 24" O.C. (U.N.O.). OR AS SPECIFIED PER COMMUNITY SPECS & MUNICIPALITY REQUIREMENTS.
5. ALL STRUCTURAL FRAMING LUMBER EXPOSED DIRECTLY TO THE WEATHER OR BEARING DIRECTLY ON MASONRY OR CONCRETE SHALL BE TREATED. ALL WOOD IN CONTACT WITH THE GROUND MUST BE GROUND-CONTACT APPROVED. ALL WOOD EXPOSED DIRECTLY TO THE WEATHER SHALL BE PROTECTED TO PREVENT THE OCCURRENCE OF ROT.
6. ALL ANGLED WALLS ARE AT 45 DEGREES UNLESS NOTED OTHERWISE.
7. REFER TO QUALITY STANDARDS AND/OR MANUFACTURER SPECS FOR WINDOW ROUGH OPENING SIZES. SEE ELEVATIONS FOR WINDOW HEADER HEIGHTS (U.N.O.).
8. PROVIDE BLOCKING ABOVE WINDOWS AND DOORS 16" O.C.
9. PROVIDE EXTRA STUDS AS INDICATED AT BEAM BEARING LOCATIONS.
10. WALLS TO BE FRAMED WITH STUDS AT 16" O.C. AT KITCHEN & BATH WALLS WITH CABINETS AND AT TUB/SHOWER LOCATIONS (PER MANUF.).
11. ALL COMMON CEILING BETWEEN GARAGE TO HOUSE PROVIDE 5/8" TYPE X GWB PER GARAGE SEPARATION REQUIREMENTS PER CODE. ALL JOINTS TO BE TAPED & MUDDED FOR FIRE SEPARATION. ALL STRUCTURES SUPPORTING FLOOR/CEILING ASSEMBLIES USED FOR SEPARATION REQUIRE NOT LESS THAN ½" GYP OR EQ. PER SECTION R302.6
12. SEPARATE GARAGE FROM ATTIC WITH 5/8" TYPE X GWB SCUTTLE MINIMUM AND 2X SCUTTLE FRAMING MATERIAL.
13. HEEL HEIGHTS: SEE ELEVATIONS SHEETS FOR TOP OF FASCIA DIMENSIONS TO GATHER PROPER HEEL HEIGHT REQUIREMENTS.
14. PROVIDE AND INSTALL LOCALLY CERTIFIED SMOKE DETECTORS AND CARBON MONOXIDE DETECTORS AS REQUIRED BY NATIONAL FIRE PROTECTION ASSOCIATION AND MEETING THE REQUIREMENTS OF ALL GOVERNING CODES AND PER MANUFACTURER SPECS.
15. PROVIDE 1 ½" FLAT WALL FRAMING FOR ALL HVAC CHASES UNLESS NOTED OTHERWISE. SEE FRAMING SHEET GN FOR ADDITIONAL NOTES PER LOCAL CODES.
16. TYPICAL DOOR OFFSET FROM PERPENDICULAR WALL U.N.O. = 4" FOR ANSWER, INTEGRITY, ELEMENTS, & TRIBUTE OR
    TYPICAL DOOR OFFSET FROM PERPENDICULAR WALL U.N.O. = 6" FOR TRADITIONS COLLECTION OR
    DOOR OFFSET CENTERED IN THE WALL UNLESS NOTED OTHERWISE
17. ALL HOMES TREATED WITH BORA-CARE TERMITE TREATMENT.
18. SMURF DOORS ARE 21 1/2" x 39" NOMINAL (R.O. 22 1/2" x 40").
19. DIMENSION AND NOTATIONS ON PLANS HAVE PREFERENCE OVER GRAPHIC DEPICTIONS AND SHOULD BE UTILIZED TO SETTLE ANY DISCREPANCIES - ANY DISCREPANCIES FOUND SHOULD BE FORWARDED TO THE ARCHITECTURAL SERVICES DEPARTMENT FOR RESOLUTION. (ATTN: TRUE HOMES FIELD ASSOC. IF YOU HAVE READ THIS FAR. PLEASE CALL CAD HOTLINE FOR PRIZE)
20. TYPICAL FOUNDATION AND ENGINEERING CONSTRUCTION DETAILS ARE SHOWN IN RESPECTIVE PLANS. TYPICAL DETAILS SHALL APPLY TO ALL SITUATIONS OCCURRING ON THE PLAN THAT ARE THE SAME OR SIMILAR TO THOSE SPECIALLY DETAILED. THE APPLICABLY OF THE DETAIL TO ITS LOCATION ON THE DRAWINGS CAN BE DETERMINED BY THE TITLE OF THE DETAIL. SUCH DETAILS SHALL APPLY WITHER OR NOT THEY ARE REFERENCED AT EACH LOCATION.
21. ALL CONSTRUCTION SPECIFICATION NOT COVERED ON THIS SHEET, OR IN PLAN SETS AND GENERAL SPECIFICATIONS, ARE TO MEET ALL APPLICABLE STATE AND LOCAL BUILDING CODES.
22. HOUSE CONSTRUCTION IS TYPICAL 2X4 STUDS AT 16" O.C. AT ALL EXTERIOR WALLS UNLESS OTHERWISE NOTED. WALLS THAT ARE TO BE BALLOON FRAMED OR CONSTRUCTED WITH 2X6 STUDS WILL BE NOTED AS SUCH. ALL BASEMENT FRAMED WALLS TO BE 2X4 STUDS FOR ONE-STORY PLANS AND 2X6 STUDS FOR LOAD BEARING WALLS ON TWO-STORY PLANS UNLESS OTHERWISE NOTED.
23. TRUE HOMES RESERVES THE RIGHT TO MAKE MODIFICATIONS TO FLOOR PLANS, DIMENSIONS, MATERIALS, AND SPECIFICATIONS WITHOUT NOTICE. THESE DRAWINGS ARE FOR THE PURPOSE OF CONVEYING AN ARCHITECTURAL CONCEPT ONLY.

NORTH CAROLINA PROFESSIONAL SEAL 29249 ENGINEER KEVIN P. MUNSON 1/4/13

NORTH CAROLINA RESIDENTIAL STRUCTURES, P.C. No. C3295 CERTIFICATE OF AUTHORIZATION

RESIDENTIAL STRUCTURES, P.C.
3410 N. Davidson St.
Charlotte, N.C. 28205
Seal For Structural Only

DESIGN CRITERIA

1. DESIGN LOADS ARE ALL DEAD LOADS PLUS:
   A. SLEEPING ROOMS.....30 PSF
   B. ALL OTHER FLOORS.....40 PSF
   C. BALCONIES.....40 PSF
   D. ATTIC FLOOR LIVE LOADING WITH THE FOLLOWING:
      i. AREA ACCESSIBLE BY STAIRS.....40 PSF
      ii. ROOF SLOPES >3:12.....20 PSF
      iii. ROOF SLOPES <3:12.....10 PSF
   E. ROOF LIVE LOAD.....20 PSF
   F. WIND LOAD.....120 MPH
   G. SNOW LOAD.....20 PSF
   H. SEISMIC ZONE.....B
   I. DESIGN IS COMPLIANT WITH 2018 NCRC ENERGY CODE N1102.2 PRESCRIPTIVE FOR CLIMATE ZONE 4A

REVISION LOG

1. DATE: DRAWN BY:
2. DATE: DRAWN BY:
3. DATE: DRAWN BY:
4. DATE: DRAWN BY:

TrueHomes
IT'S ALL ABOUT U
2649 Brekonridge Centre Dr.
Suite 104
Monroe, N.C. 28110
704-271-1191

BUIES CREEK TOWNHOMES
6 UNIT
LOTS 53-58

LUCAS TH
1340

HARNETT COUNTY

Copyright True Homes L.L.C. All rights reserved. The duplication, reproduction, copying, sale, rental, licensing, or any other distribution or use of these drawings, any portion there of, or the plans depicted hereon is strictly prohibited.

PREPARED BY: Michael
DATE: 1.3.24
SCALE: AS SHOWN
REVIEWED BY: Chuck

SHEET: CS

NOTE:
1. THIS PLAN IS FOR PURPOSES OF ESTABLISHING ACCURATE FORMWORK FOR EXECUTION OF CONCRETE SLAB POUR.
2. DIMENSIONS ARE TO SLAB CORNERS WHETHER INTERIOR OR EXTERIOR.
3. THIS PLAN IS CONSIDERED NON-STRUCTURAL.

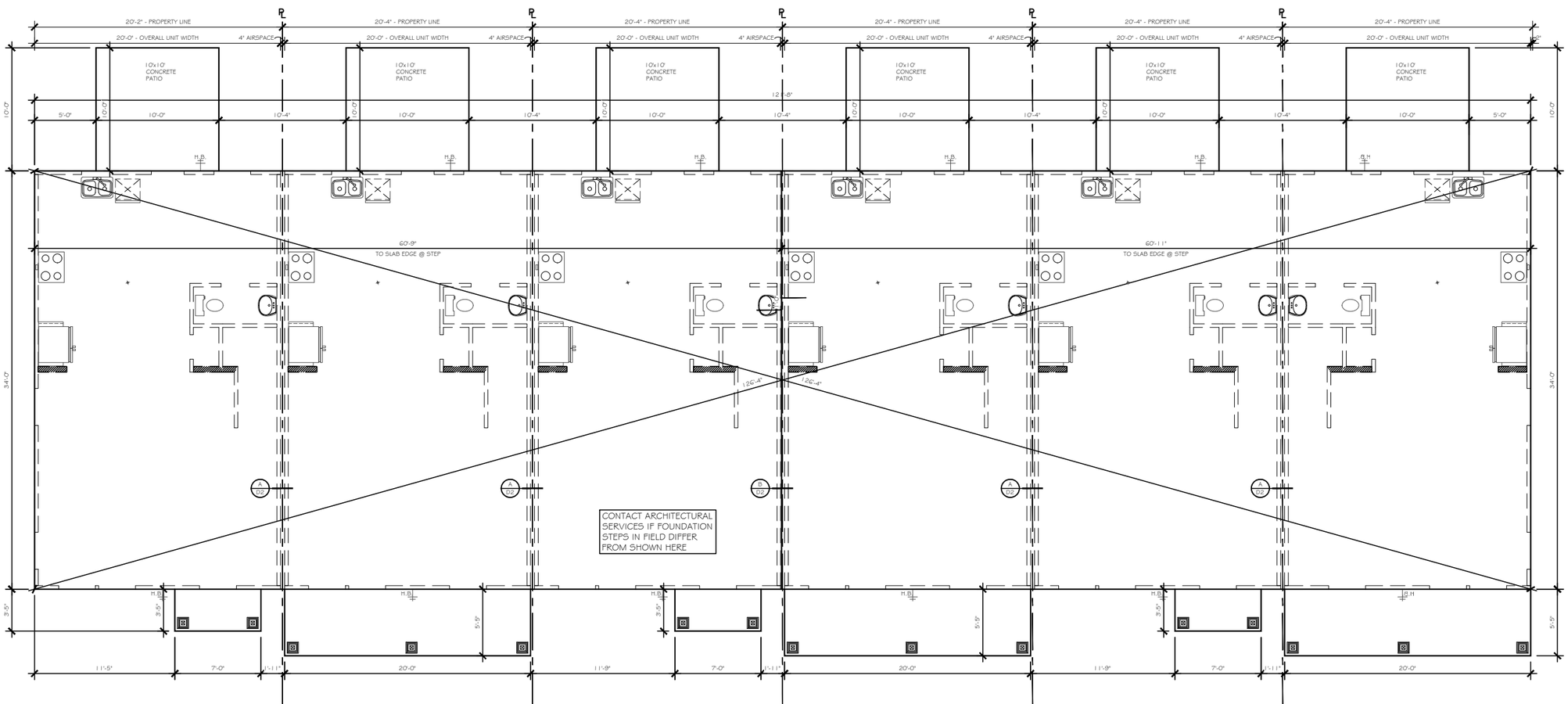

SLAB
1340 - FORMWORK PLAN LOT - 53
SCALE: 3/16" = 1'-0" LUCAS TH

SLAB
1340 - FORMWORK PLAN LOT - 54
SCALE: 3/16" = 1'-0" LUCAS TH

SLAB
1340 - FORMWORK PLAN LOT - 55
SCALE: 3/16" = 1'-0" LUCAS TH

SLAB
1340 - FORMWORK PLAN LOT - 56
SCALE: 3/16" = 1'-0" LUCAS TH

SLAB
1340 - FORMWORK PLAN LOT - 57
SCALE: 3/16" = 1'-0" LUCAS TH

SLAB
1340 - FORMWORK PLAN LOT - 58
SCALE: 3/16" = 1'-0" LUCAS TH

TrueHomes
IT'S ALL ABOUT U
2649 Brekonridge Centre Dr.
Suite 104
Monroe, N.C. 28110
704-271-1191

BUIES CREEK TOWNHOMES
6 UNIT
LOTS 53-58

LUCAS TH
1340

HARNETT COUNTY

Copyright True Homes L.L.C.. All rights reserved. The duplication, reproduction, copying, sale, rental, licensing, or any other distribution or use of these drawings, any portion there of, or the plans depicted hereon is strictly prohibited.

PREPARED BY: Michael
DATE: 1.3.24
SCALE: AS SHOWN
REVIEWED BY: Chuck

SHEET: SF1

FOUNDATION PAD FOOTING SIZES	
KEYNOTE	SIZE
A	18"x18"x8" w/3-#4's E.W.
B	24"x24"x12" w/4-#4's E.W.
C	30"x30"x12" w/4-#4's E.W.
D	36"x36"x12" w/4-#4's E.W.
E	48"x48"x12" w/6-#4's E.W.
F	36"x60"x12" w#4's @ 6" O.C. E.W.

NOTE:
1. OUTSIDE DIMENSIONS ARE TO FOUNDATION CORNERS AND MASONRY OPENINGS.
2. INSIDE DIMENSIONS ARE FROM FACE OF AREA SEPARATION WALL (BETWEEN UNITS) TO CENTER OF APPLIANCES, FIXTURES AND FOOTINGS.

TrueHomes
IT'S ALL ABOUT U
2649 Brekonridge Centre Dr.
Suite 104
Monroe, N.C. 28110
704-271-1191

NORTH CAROLINA PROFESSIONAL SEAL 29249 ENGINEER KEVIN P MUNSON
1/4/23

NORTH CAROLINA RESIDENTIAL STRUCTURES, P.C. No. C3295 CERTIFICATE OF AUTHORIZATION

RESIDENTIAL STRUCTURES, P.C.
3410 N. Davidson St.
Charlotte, N.C. 28205
Seal For Structural Only

BUIES CREEK TOWNHOMES
6 UNIT
LOTS 53-58

LUCAS TH
1340

HARNETT COUNTY

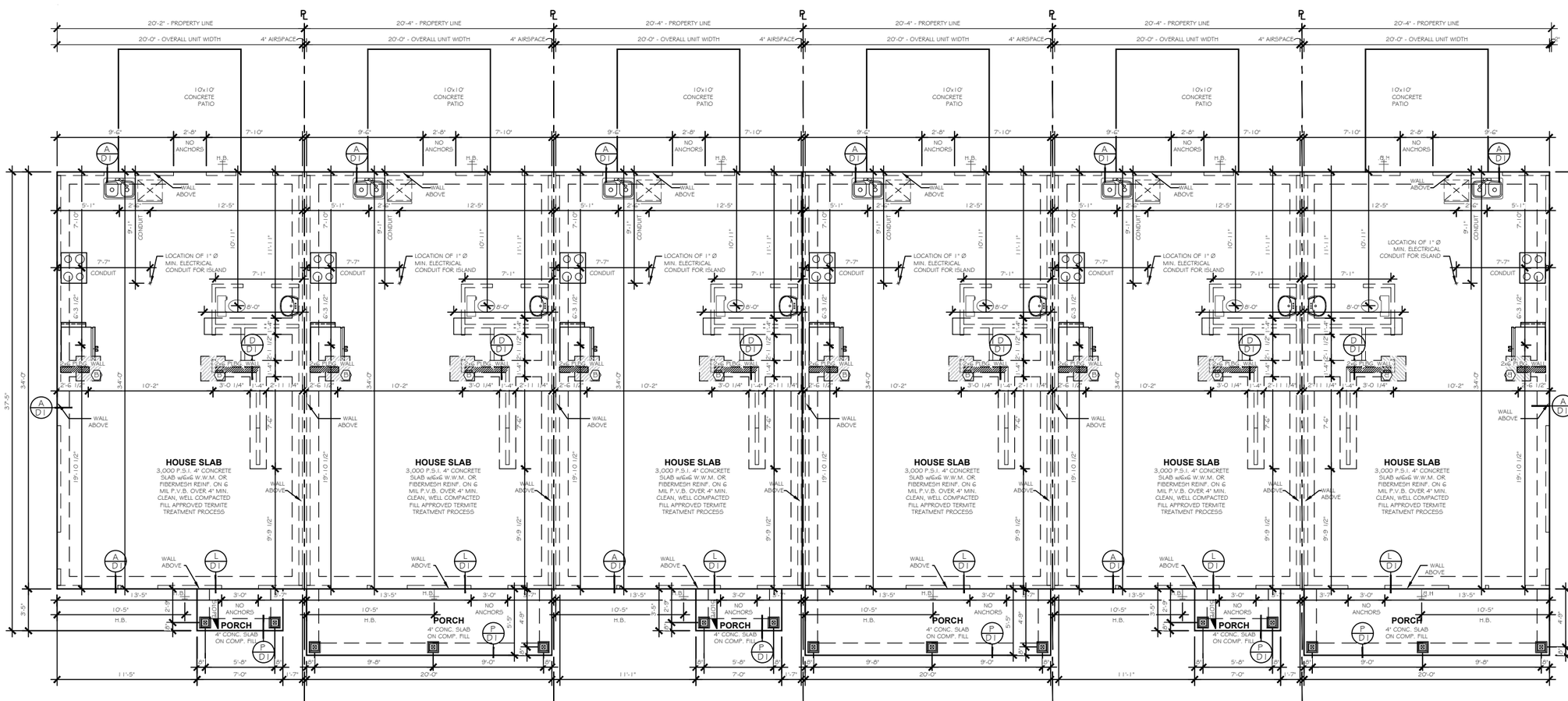

MONO
1340 - FOUNDATION PLAN LOT - 53
SCALE: 3/16" = 1'-0" LUCAS TH

MONO
1340 - FOUNDATION PLAN LOT - 54
SCALE: 3/16" = 1'-0" LUCAS TH

MONO
1340 - FOUNDATION PLAN LOT - 55
SCALE: 3/16" = 1'-0" LUCAS TH

MONO
1340 - FOUNDATION PLAN LOT - 56
SCALE: 3/16" = 1'-0" LUCAS TH

MONO
1340 - FOUNDATION PLAN LOT - 57
SCALE: 3/16" = 1'-0" LUCAS TH

MONO
1340 - FOUNDATION PLAN LOT - 58
SCALE: 3/16" = 1'-0" LUCAS TH

Copyright True Homes L.L.C.. All rights reserved. The duplication, reproduction, copying, sale, rental, licensing, or any other distribution or use of these drawings, any portion there of, or the plans depicted hereon is strictly prohibited.

PREPARED BY: Michael
DATE: 1.3.24
SCALE: AS SHOWN
REVIEWED BY: Chuck

SHEET: S1

NORTH CAROLINA PROFESSIONAL SEAL 29249 ENGINEER KEVIN P. MUNSON 1/4/23

NORTH CAROLINA CERTIFICATE OF AUTHORIZATION RESIDENTIAL STRUCTURES, P.C. No. C3295

RESIDENTIAL STRUCTURES, P.C.
3410 N. Davidson St.
Charlotte, N.C. 28205
Seal For Structural Only

POST SCHEDULE	
2x4 STUDS	2x6 STUDS
2 — EX: (2) 2X4	2 — EX: (2) 2X6
NUMBER INSIDE CALLOUT INDICATES TOTAL NUMBER OF STUDS.	
4X4 POST	6X6 POST
P	P
LETTER 'P' INSIDE CALLOUT INDICATES A SOLID 4x4 or 6x6 POST	

SEE COVER PAGE FOR ROUGH OPENING DIMENSIONS

KING / JACK STUD SCHEDULE	
A	(2) JACKS
B	(1) JACK & (1) KING
C	(1) JACK & (2) KINGS
D	(1) JACK & (3) KINGS
E	(2) JACKS & (1) KING
F	(2) JACKS & (2) KINGS
G	(2) JACKS & (3) KINGS
H	(3) JACKS & (3) KINGS
I	(4) JACKS & (4) KINGS

STRUCTURAL LEGEND	
	BEARING WALL
	METHOD GB OF 2015 IRC
	BEARING WALL W/ METHOD GB OF 2015 IRC
	CENTER OF BEAM / JOIST / GIRDER TRUSS
⊗	USP LSTA24 HOLDDOWN OR EQ.
●	USP DTB-TZ HOLDDOWN OR EQ.

TrueHomes
IT'S ALL ABOUT U
2649 Brekonridge Centre Dr.
Suite 104
Monroe, N.C. 28110
704-271-1191

BUIES CREEK TOWNHOMES
6 UNIT
LOTS 53-58

LUCAS TH
1340

HARNETT COUNTY

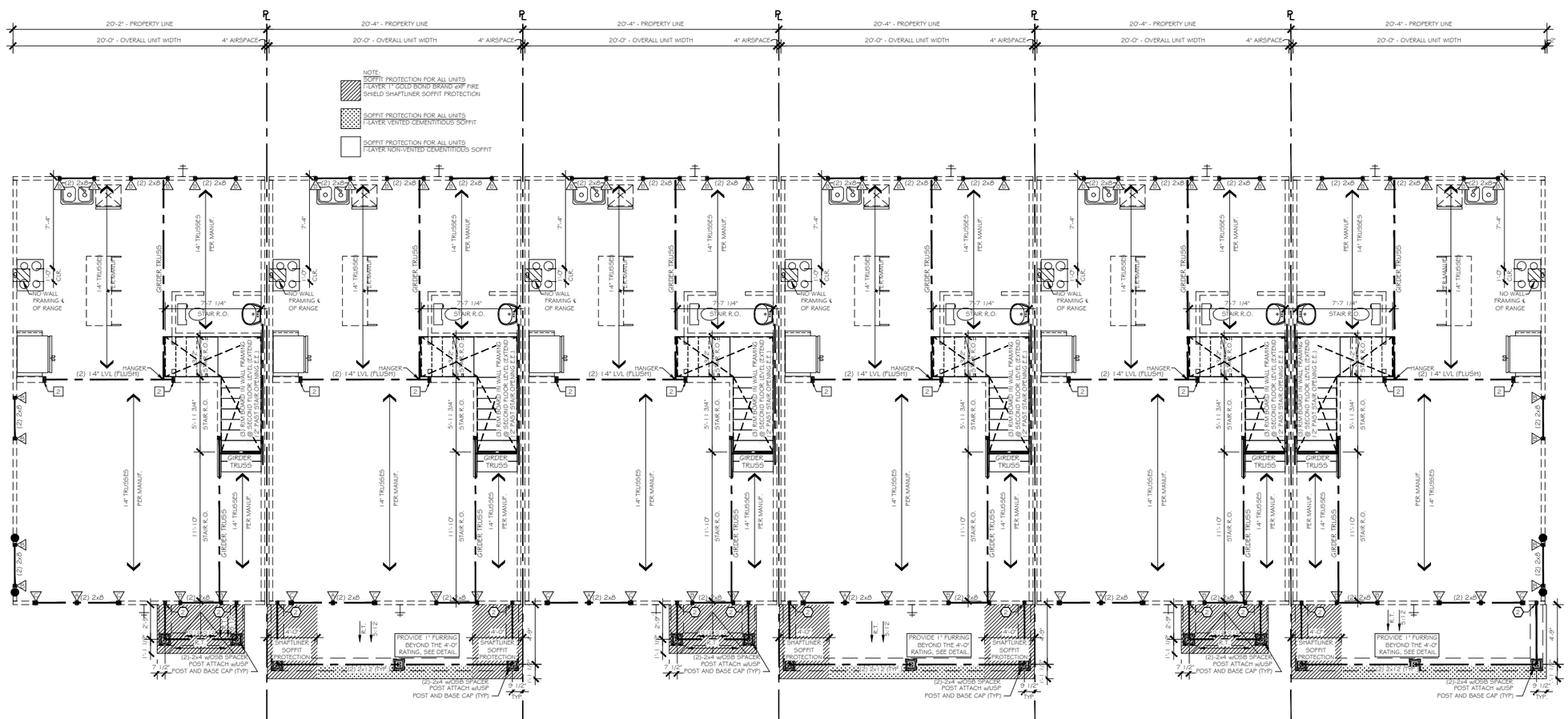

FLOOR
1340 - FRAMING PLAN LOT - 53
SCALE: 3/16" = 1'-0" LUCAS TH

FLOOR
1340 - FRAMING PLAN LOT - 54
SCALE: 3/16" = 1'-0" LUCAS TH

FLOOR
1340 - FRAMING PLAN LOT - 55
SCALE: 3/16" = 1'-0" LUCAS TH

FLOOR
1340 - FRAMING PLAN LOT - 56
SCALE: 3/16" = 1'-0" LUCAS TH

FLOOR
1340 - FRAMING PLAN LOT - 57
SCALE: 3/16" = 1'-0" LUCAS TH

FLOOR
1340 - FRAMING PLAN LOT - 58
SCALE: 3/16" = 1'-0" LUCAS TH

Copyright True Homes L.L.C.. All rights reserved. The duplication, reproduction, copying, sale, rental, licensing, or any other distribution or use of these drawings, any portion there of, or the plans depicted hereon is strictly prohibited.

PREPARED BY: Michael
DATE: 1.3.24
SCALE: AS SHOWN
REVIEWED BY: Chuck

SHEET: S2

NORTH CAROLINA PROFESSIONAL SEAL 29249 ENGINEER KEVIN P. MUNSON 1/4/23

NORTH CAROLINA RESIDENTIAL STRUCTURES, P.C. No. C3295 CERTIFICATE OF AUTHORIZATION

RESIDENTIAL STRUCTURES, P.C.
3410 N. Davidson St.
Charlotte, N.C. 28205
Seal For Structural Only

WALL BRACING NOTES:

THIS STRUCTURE HAS BEEN ANALYZED BY A PROFESSIONAL ENGINEER FOR LATERAL LOADING. IT HAS BEEN DESIGNED USING CONTINOUSLY SHEATHED 7/16" OSB SHEATHING, FASTENED AT 6" O.C. ALONG THE EDGES AND 12" O.C. ALONG THE INTERIOR (w/6d common nails or 8d-2 ½" long x 0.113"diameter-nails) TO MEET OR EXCEED THE INTENT OF THE 2018 NC RESIDENTIAL BUILDING CODE. BLOCKING SHALL BE PROVDED AT ALL PANEL EDGES. All INTERIOR WALLS (WHERE NOTED) SHOULD BE METHOD GB AND FASTENED WITH 5d COOLER NAILS OR #6 SCREWS AT 7" ALONG THE EDGES AND 7" FIELD. All INTERIOR COMMON WALLS (PARTY WALLS) SHOULD BE METHOD GB 1-SIDE FASTENED WITH 5d COOLER NAILS OR #6 SCREWS AT 7" ALONG THE EDGES AND 7" FIELD. ANY METHODS THAT DEVIATE FROM THE ABOVE ARE NOTED ON THE PLAN SET. WHERE WALL LINES REQUIRE FURTHER REINFORCEMENT, ADDITIONAL BRACING METHODS, ENGINEERED WALL SECTIONS AND HOLD DOWNS HAVE BEEN INCLUDED TO RESIST THE LATERAL LOADS. CONTINUITY TO BE PROVIDED BETWEEN UNITS.

WALL BRACING NOTE

- 115 MPH WIND ZONE - EXP. B
- 8, 9 OR 10 FT. WALL HEIGHT
- ENGINEERED WALL BRACING DESIGN MEETS OR EXCEEDS THE INTENT OF THE: 2018 IRC

METHOD	MATERIAL	FASTENER SPACING
CS-WSP	MIN. 3/8" OSB	6" EDGES, 12" FIELD
GB	MIN. 1/2" GYP	7" EDGES, 7" FIELD

ALL WOOD STRUCTURAL PANEL BRACING SHALL BE ATTACHED TO FRAMING OR BLOCKING, EXCEPT GB BRACING. HORIZONTAL JOINTS SHALL NOT BE REQ'D TO BE BLOCKED WHEN JOINTS ARE FINISHED.

BWL GB (2-SIDED) = WALL BRACING METHOD GB OF 2015 IRC (2 SIDE)
BWL GB (1-SIDED) = WALL BRACING METHOD GB OF 2015 IRC (1 SIDE)
BWL CS-WSP = WALL BRACING METHOD CS-WSP OF 2015 IRC

**INSTALL AN EXTRA JOIST BELOW ALL PARALLEL PARTITION WALLS, U.N.O.

STRUCTURAL LEGEND

- BEARING WALL
- METHOD GB OF 2015 IRC
- BEARING WALL W/ METHOD GB OF 2015 IRC
- CENTER OF BEAM / JOIST / GIRDER TRUSS
- USP LSTA24 HOLDDOWN OR EQ.
- USP DTB-TZ HOLDDOWN OR EQ.

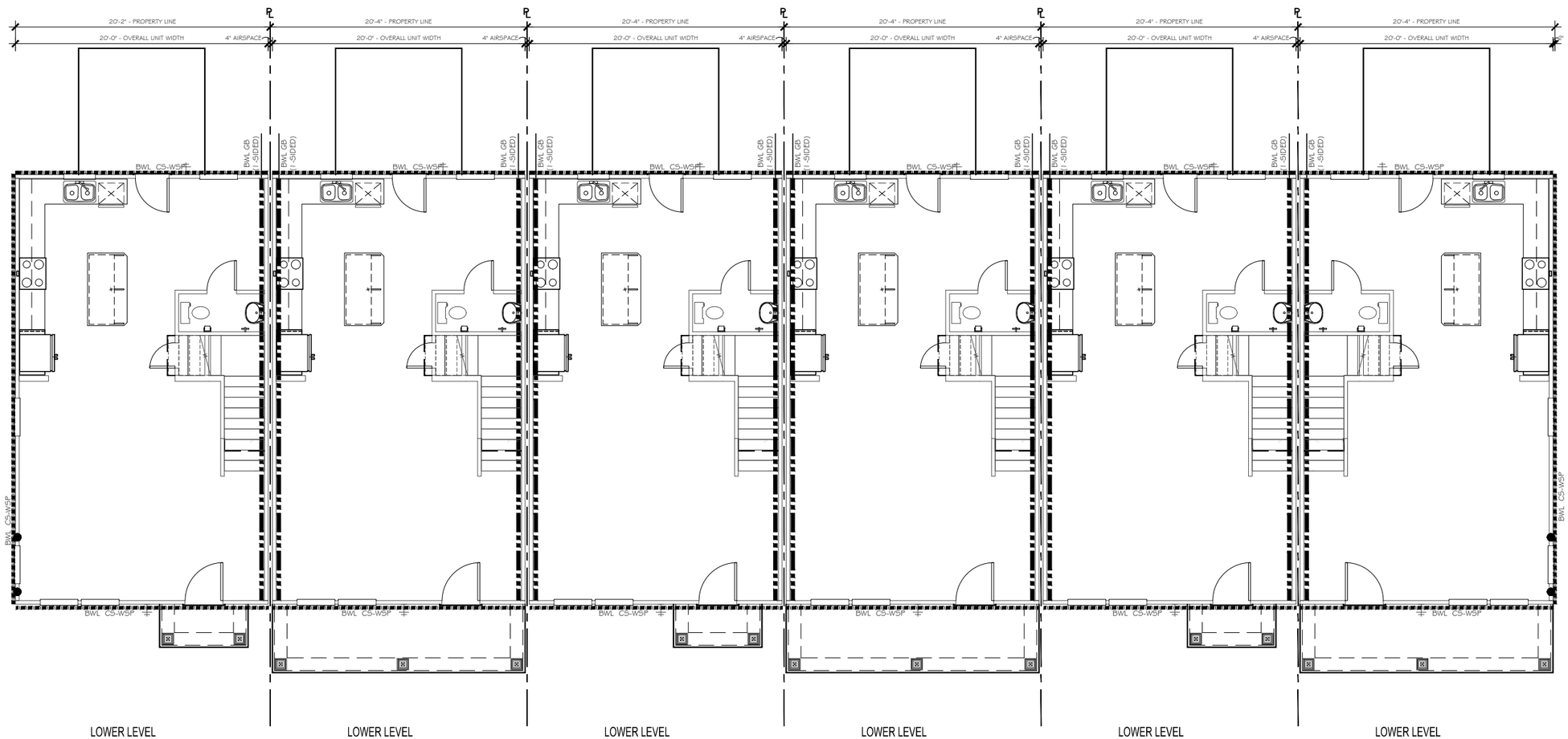

LOWER LEVEL
1340 - BRACED WALL PLAN LOT - 53
SCALE: 3/16" = 1'-0" LUCAS TH

LOWER LEVEL
1340 - BRACED WALL PLAN LOT - 54
SCALE: 3/16" = 1'-0" LUCAS TH

LOWER LEVEL
1340 - BRACED WALL PLAN LOT - 55
SCALE: 3/16" = 1'-0" LUCAS TH

LOWER LEVEL
1340 - BRACED WALL PLAN LOT - 56
SCALE: 3/16" = 1'-0" LUCAS TH

LOWER LEVEL
1340 - BRACED WALL PLAN LOT - 57
SCALE: 3/16" = 1'-0" LUCAS TH

LOWER LEVEL
1340 - BRACED WALL PLAN LOT - 58
SCALE: 3/16" = 1'-0" LUCAS TH

TrueHomes
IT'S ALL ABOUT U
2649 Brekonridge Centre Dr.
Suite 104
Monroe, N.C. 28110
704-271-1191

BUIES CREEK TOWNHOMES
6 UNIT
LOTS 53-58

LUCAS TH
1340

HARNETT COUNTY

Copyright True Homes L.L.C.. All rights reserved. The duplication, reproduction, copying, sale, rental, licensing, or any other distribution or use of these drawings, any portion there of, or the plans depicted hereon is strictly prohibited.

PREPARED BY: Michael
DATE: 1.3.24
SCALE: AS SHOWN
REVIEWED BY: Chuck

SHEET: S2.1

NORTH CAROLINA PROFESSIONAL SEAL 29249 ENGINEER KEVIN P. MUNSON 1/4/23

NORTH CAROLINA RESIDENTIAL STRUCTURES, P.C. No. C3295 CERTIFICATE OF AUTHORIZATION

RESIDENTIAL STRUCTURES, P.C.
3410 N. Davidson St.
Charlotte, N.C. 28205
Seal For Structural Only

POST SCHEDULE	
2x4 STUDS	2x6 STUDS
2 — EX: (2) 2X4	2 — EX: (2) 2X6
NUMBER INSIDE CALLOUT INDICATES TOTAL NUMBER OF STUDS.	
4X4 POST	6X6 POST
P	P
LETTER 'P' INSIDE CALLOUT INDICATES A SOLID 4x4 or 6x6 POST	

SEE COVER PAGE FOR ROUGH OPENING DIMENSIONS

KING / JACK STUD SCHEDULE	
A	(2) JACKS
B	(1) JACK & (1) KING
C	(1) JACK & (2) KINGS
D	(1) JACK & (3) KINGS
E	(2) JACKS & (1) KING
F	(2) JACKS & (2) KINGS
G	(2) JACKS & (3) KINGS
H	(3) JACKS & (3) KINGS
I	(4) JACKS & (4) KINGS

STRUCTURAL LEGEND

- BEARING WALL
- METHOD GB OF 2015 IRC
- BEARING WALL W/ METHOD GB OF 2015 IRC
- CENTER OF BEAM / JOIST / GIRDER TRUSS
- USP LSTA24 HOLDDOWN OR EQ.
- USP DTB-TZ HOLDDOWN OR EQ.

TrueHomes
IT'S ALL ABOUT U
2649 Brekonridge Centre Dr.
Suite 104
Monroe, N.C. 28110
704-271-1191

BUIES CREEK TOWNHOMES
6 UNIT
LOTS 53-58

LUCAS TH
1340

HARNETT COUNTY

ATTIC VENTILATION CALCULATIONS (PER UNIT)						
RIDGE VENT NET FREE AREA	= 18 SQ. IN. PER LINEAR FT.					
SOFFIT VENT NET FREE AREA	= 7 SQ. IN. PER LINEAR FT.					
ATTIC AREA (TOTAL)	=	625 SQ.FT.				
ATTIC VENTILATION (REQUIRED)	=	625 /300	=	2.08 SQ.FT. =	300.00 SQ.IN	
RIDGE VENT	=	12 FT	x 18 SQ.IN.	=	216	SQ. IN. NET FREE AREA
SOFFIT VENT	=	12 FT	x 7 SQ.IN.	=	84	SQ. IN. NET FREE AREA
TOTAL	= 300 SQ. IN. NET FREE AREA			>	300.0 SQ. IN. REQUIRED	

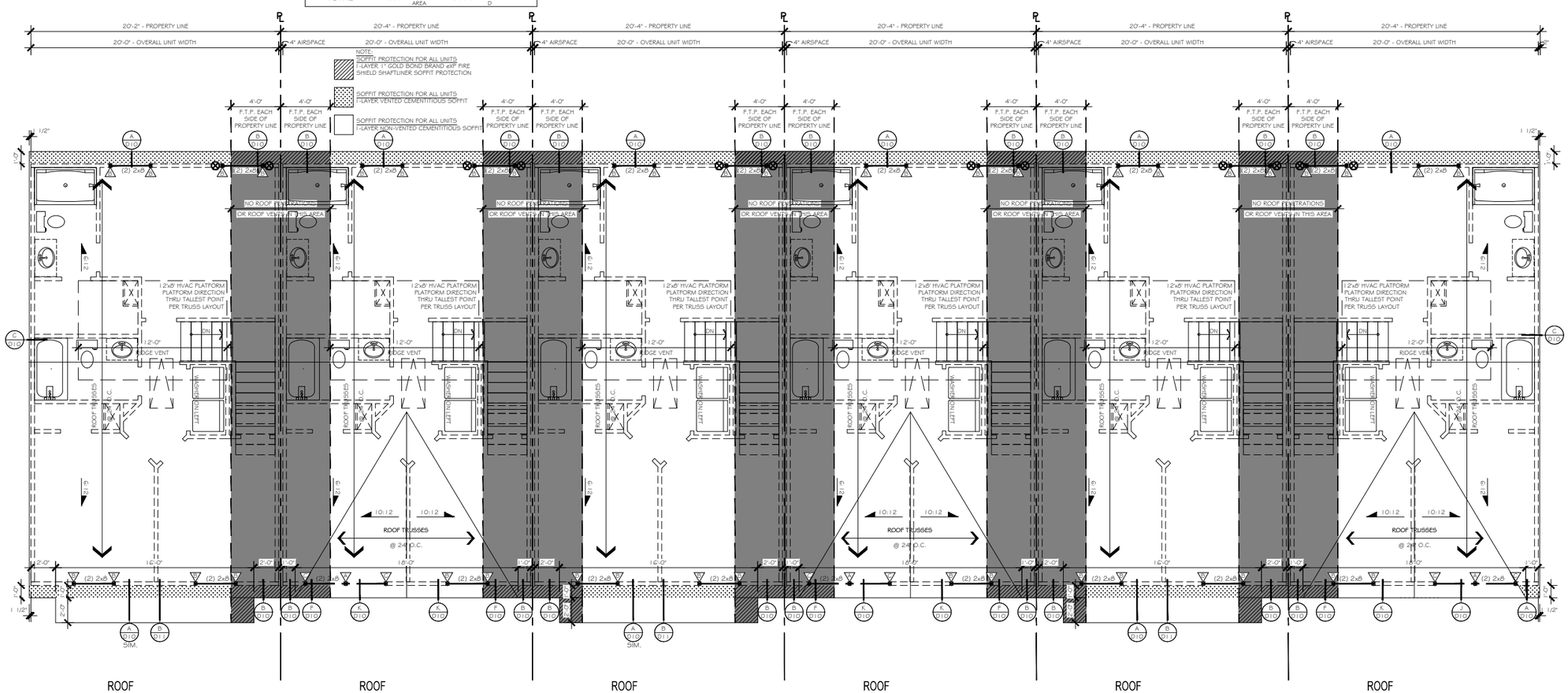

ROOF 1340 - FRAMING PLAN LOT - 53
SCALE: 3/16" = 1'-0" LUCAS TH

ROOF 1340 - FRAMING PLAN LOT - 54
SCALE: 3/16" = 1'-0" LUCAS TH

ROOF 1340 - FRAMING PLAN LOT - 55
SCALE: 3/16" = 1'-0" LUCAS TH

ROOF 1340 - FRAMING PLAN LOT - 56
SCALE: 3/16" = 1'-0" LUCAS TH

ROOF 1340 - FRAMING PLAN LOT - 57
SCALE: 3/16" = 1'-0" LUCAS TH

ROOF 1340 - FRAMING PLAN LOT - 58
SCALE: 3/16" = 1'-0" LUCAS TH

Copyright True Homes L.L.C.. All rights reserved. The duplication, reproduction, copying, sale, rental, licensing, or any other distribution or use of these drawings, any portion there of, or the plans depicted hereon is strictly prohibited.

PREPARED BY: Michael
DATE: 1.3.24
SCALE: AS SHOWN
REVIEWED BY: Chuck

SHEET: S3

NORTH CAROLINA PROFESSIONAL SEAL 29249 ENGINEER KEVIN P. MUNSON 1/4/23

NORTH CAROLINA RESIDENTIAL STRUCTURES, P.C. No. C3295 CERTIFICATE OF AUTHORIZATION

RESIDENTIAL STRUCTURES, P.C.
3410 N. Davidson St.
Charlotte, N.C. 28205
Seal For Structural Only

WALL BRACING NOTES:

THIS STRUCTURE HAS BEEN ANALYZED BY A PROFESSIONAL ENGINEER FOR LATERAL LOADING. IT HAS BEEN DESIGNED USING CONTINOUSLY SHEATHED 7/16" OSB SHEATHING, FASTENED AT 6" O.C. ALONG THE EDGES AND 12" O.C. ALONG THE INTERIOR (w/6d common nails or 8d-2 ½" long x 0.113"diameter-nails) TO MEET OR EXCEED THE INTENT OF THE 2018 NC RESIDENTIAL BUILDING CODE. BLOCKING SHALL BE PROVDED AT ALL PANEL EDGES. All INTERIOR WALLS (WHERE NOTED) SHOULD BE METHOD GB AND FASTENED WITH 5d COOLER NAILS OR #6 SCREWS AT 7" ALONG THE EDGES AND 7" FIELD. All INTERIOR COMMON WALLS (PARTY WALLS) SHOULD BE METHOD GB 1-SIDE FASTENED WITH 5d COOLER NAILS OR #6 SCREWS AT 7" ALONG THE EDGES AND 7" FIELD. ANY METHODS THAT DEVIATE FROM THE ABOVE ARE NOTED ON THE PLAN SET. WHERE WALL LINES REQUIRE FURTHER REINFORCEMENT, ADDITIONAL BRACING METHODS, ENGINEERED WALL SECTIONS AND HOLD DOWNS HAVE BEEN INCLUDED TO RESIST THE LATERAL LOADS. CONTINUITY TO BE PROVIDED BETWEEN UNITS.

WALL BRACING NOTE

- 115 MPH WIND ZONE - EXP. B
- 8, 9 OR 10 FT. WALL HEIGHT
- ENGINEERED WALL BRACING DESIGN MEETS OR EXCEEDS THE INTENT OF THE: 2018 IRC

METHOD	MATERIAL	FASTENER SPACING
CS-WSP	MIN. 3/8" OSB	6" EDGES, 12" FIELD
GB	MIN. 1/2" GYP	7" EDGES, 7" FIELD

ALL WOOD STRUCTURAL PANEL BRACING SHALL BE ATTACHED TO FRAMING OR BLOCKING, EXCEPT GB BRACING. HORIZONTAL JOINTS SHALL NOT BE REQ'D TO BE BLOCKED WHEN JOINTS ARE FINISHED.

BWL GB (2-SIDED) = WALL BRACING METHOD GB OF 2015 IRC (2 SIDE)
BWL GB (1-SIDED) = WALL BRACING METHOD GB OF 2015 IRC (1 SIDE)
BWL CS-WSP = WALL BRACING METHOD CS-WSP OF 2015 IRC

**INSTALL AN EXTRA JOIST BELOW ALL PARALLEL PARTITION WALLS, U.N.O.

STRUCTURAL LEGEND

- BEARING WALL
- METHOD GB OF 2015 IRC
- BEARING WALL W/ METHOD GB OF 2015 IRC
- CENTER OF BEAM / JOIST / GIRDER TRUSS
- USP LSTA24 HOLDDOWN OR EQ.
- USP DTB-TZ HOLDDOWN OR EQ.

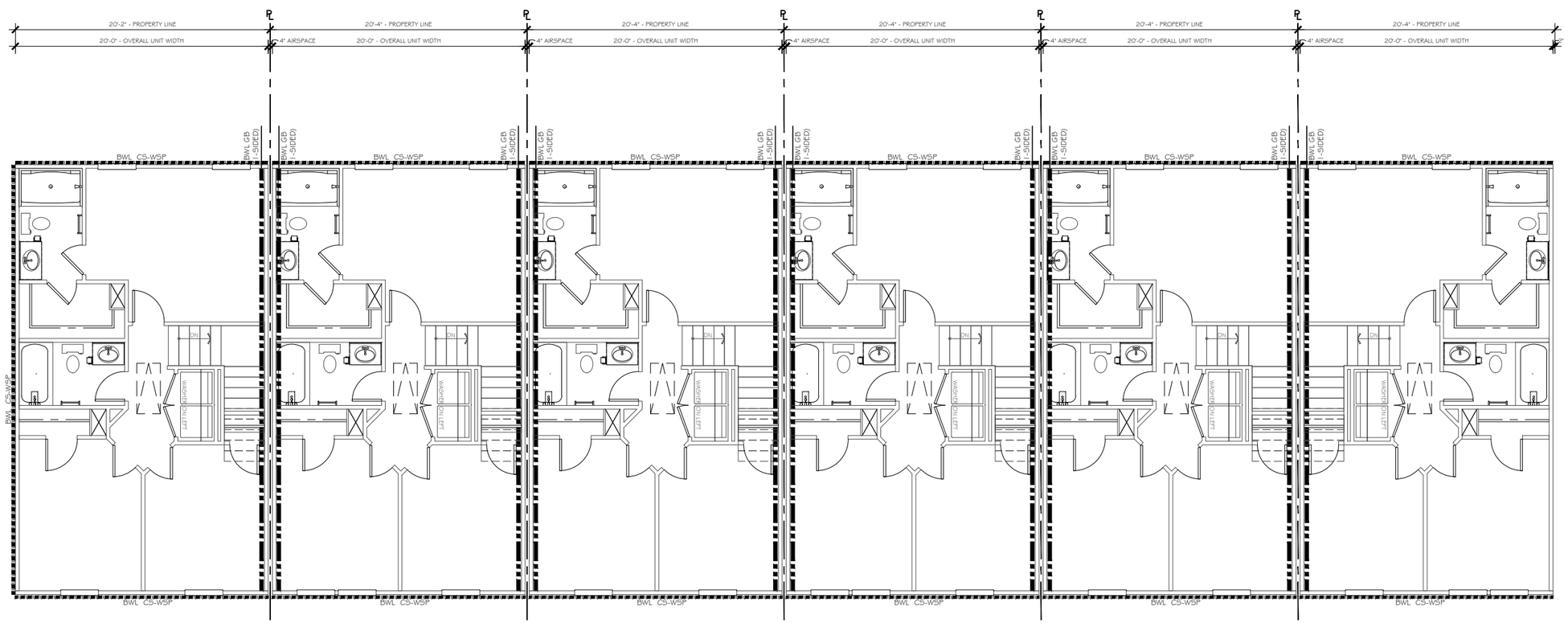

UPPER LEVEL
1340 - BRACED WALL PLAN LOT - 53
SCALE: 3/16" = 1'-0" LUCAS TH

UPPER LEVEL
1340 - BRACED WALL PLAN LOT - 54
SCALE: 3/16" = 1'-0" LUCAS TH

UPPER LEVEL
1340 - BRACED WALL PLAN LOT - 55
SCALE: 3/16" = 1'-0" LUCAS TH

UPPER LEVEL
1340 - BRACED WALL PLAN LOT - 56
SCALE: 3/16" = 1'-0" LUCAS TH

UPPER LEVEL
1340 - BRACED WALL PLAN LOT - 57
SCALE: 3/16" = 1'-0" LUCAS TH

UPPER LEVEL
1340 - BRACED WALL PLAN LOT - 58
SCALE: 3/16" = 1'-0" LUCAS TH

TrueHomes
IT'S ALL ABOUT U
2649 Brekonridge Centre Dr.
Suite 104
Monroe, N.C. 28110
704-271-1191

BUIES CREEK TOWNHOMES
6 UNIT
LOTS 53-58

LUCAS TH
1340

HARNETT COUNTY

Copyright True Homes L.L.C.. All rights reserved. The duplication, reproduction, copying, sale, rental, licensing, or any other distribution or use of these drawings, any portion there of, or the plans depicted hereon is strictly prohibited.

PREPARED BY: Michael
DATE: 1.3.24
SCALE: AS SHOWN
REVIEWED BY: Chuck

SHEET: S3.1

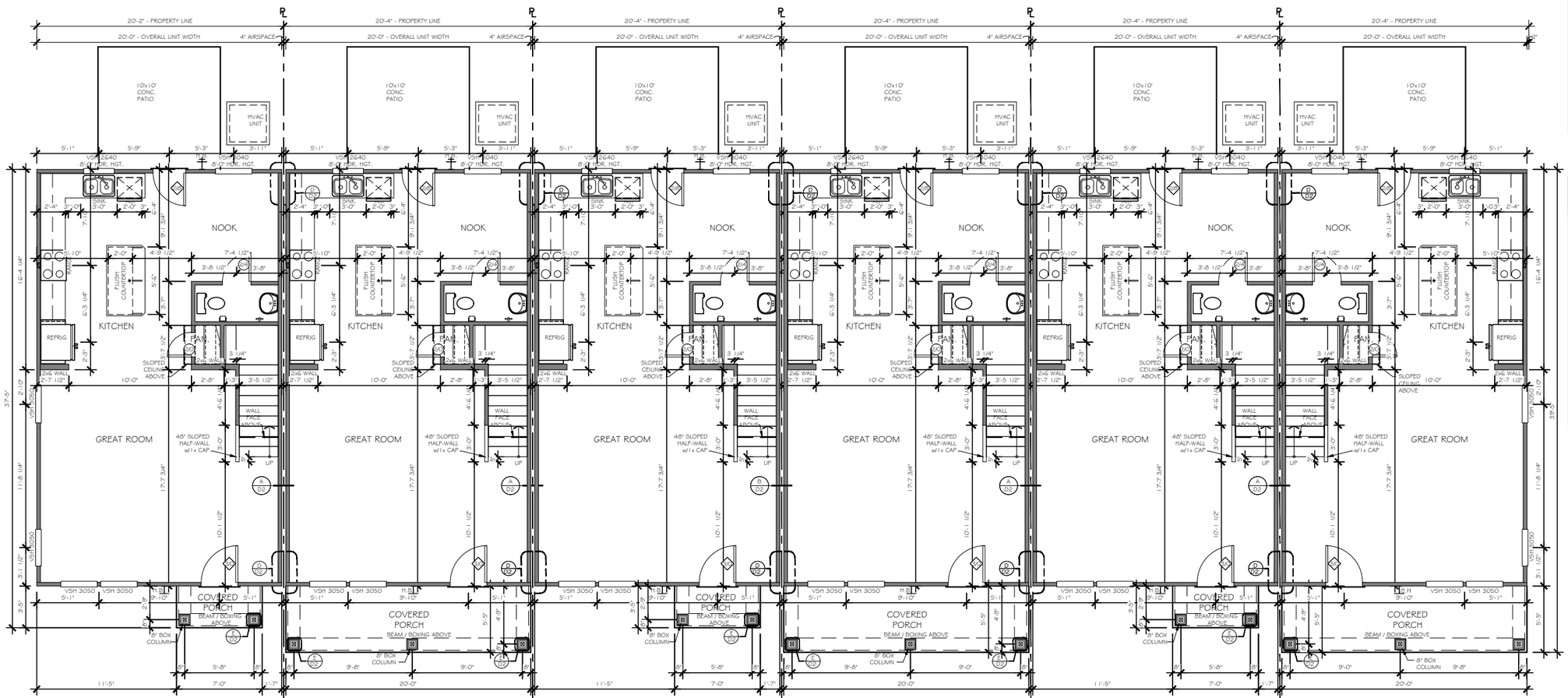

TrueHomes
IT'S ALL ABOUT U
2649 Brekonridge Centre Dr.
Suite 104
Monroe, N.C. 28110
704-271-1191

BUIES CREEK
TOWNHOMES
6 UNIT
LOTS 53-58

LUCAS TH
1340

HARNETT COUNTY

Copyright True Homes L.L.C.. All rights reserved. The duplication, reproduction, copying, sale, rental, licensing, or any other distribution or use of these drawings, any portion there of, or the plans depicted hereon is strictly prohibited.

PREPARED BY: Michael

DATE: 1.3.24

SCALE: AS SHOWN

REVIEWED BY: Chuck

SHEET: A1

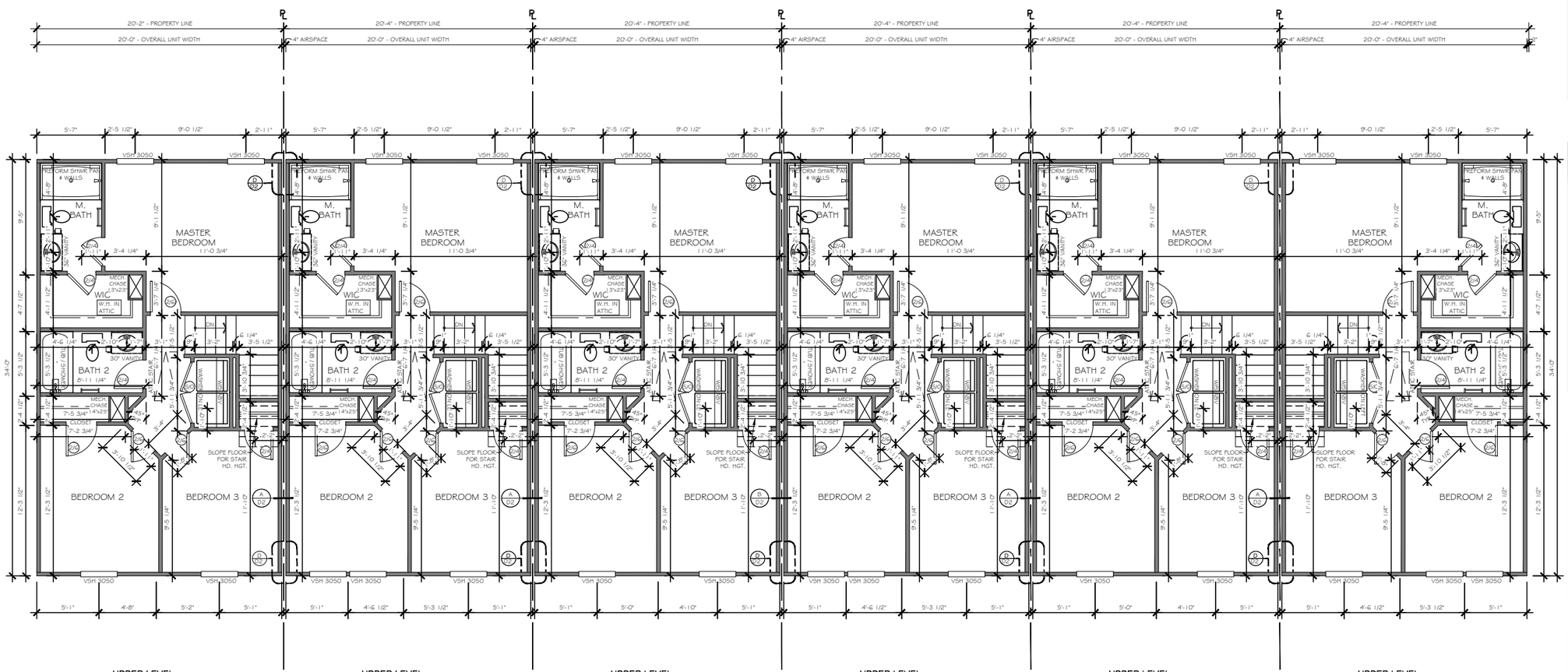

UPPER LEVEL
1340 - FLOOR PLAN LOT - 53
SCALE: 3/16" = 1'-0" LUCAS TH

UPPER LEVEL
1340 - FLOOR PLAN LOT - 54
SCALE: 3/16" = 1'-0" LUCAS TH

UPPER LEVEL
1340 - FLOOR PLAN LOT - 55
SCALE: 3/16" = 1'-0" LUCAS TH

UPPER LEVEL
1340 - FLOOR PLAN LOT - 56
SCALE: 3/16" = 1'-0" LUCAS TH

UPPER LEVEL
1340 - FLOOR PLAN LOT - 57
SCALE: 3/16" = 1'-0" LUCAS TH

UPPER LEVEL
1340 - FLOOR PLAN LOT - 58
SCALE: 3/16" = 1'-0" LUCAS TH

TrueHomes
IT'S ALL ABOUT U
2649 Brekonridge Centre Dr.
Suite 104
Monroe, N.C. 28110
704-271-1191

BUIES CREEK
TOWNHOMES
6 UNIT
LOTS 53-58

LUCAS TH
1340

HARNETT COUNTY

Copyright True Homes L.L.C.. All rights reserved. The duplication, reproduction, copying, sale, rental, licensing, or any other distribution or use of these drawings, any portion there of, or the plans depicted hereon is strictly prohibited.

PREPARED BY: Michael
DATE: 1.3.24
SCALE: AS SHOWN
REVIEWED BY: Chuck

SHEET: A2

SEE ROOF FRAMING PLANS FOR OVERHANG DIMENSIONS AND DORMER LOCATIONS

1x4 TRIM WHERE SHOWN AT WINDOWS AND DOORS UNLESS OTHERWISE NOTED

EXTERIOR MATERIAL LEGEND

- B-N-B SIDING
- STONE
- SHAKE SIDING
- METAL ROOF
- HORIZONTAL SIDING
- ROOF SHINGLE
- BRICK
- SCALLOP SIDING

KEY NOTES

- 1.5 FLASHING
- 1.7 VINYL SHUTTER
- 2.6 BRICKMOLD TRIM
- 2.1 1X4 TRIM BOARD
- 2.3 1X6 TRIM BOARD
- 2.5 1X8 TRIM BOARD
- 2.8 1X10 FRIEZE BOARD
- 3.1 1-1/2" THICK STONE CAP
- 3.5 ROWLOCK SILL
- 3.7 BRICK JACK ARCH
- 3.9 SOLDIER COURSE
- 4.1 PRECAST KEYSTONE

ELEVATION CODE

EXTERIOR UNIT	A & B
INTERIOR UNIT	C, D, E
LAYER 1	SIDING
LAYER 2	BRICK
LAYER 3	STONE
FULL PORCH	P
FORWARD	F
BACK	B

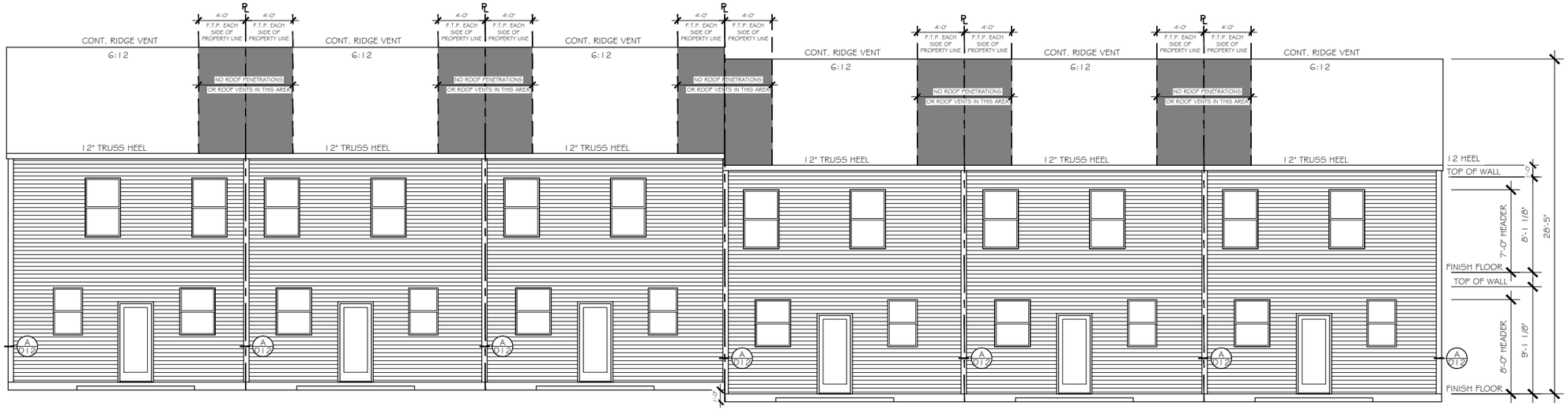

REAR ELEVATION LOT - 58 SCALE: 3/16" = 1'-0" LUCAS TH

REAR ELEVATION LOT - 57 SCALE: 3/16" = 1'-0" LUCAS TH

REAR ELEVATION LOT - 56 SCALE: 3/16" = 1'-0" LUCAS TH

REAR ELEVATION LOT - 55 SCALE: 3/16" = 1'-0" LUCAS TH

REAR ELEVATION LOT - 54 SCALE: 3/16" = 1'-0" LUCAS TH

REAR ELEVATION LOT - 53 SCALE: 3/16" = 1'-0" LUCAS TH

COLUMNS ARE NON-RATED (UNLESS OTHERWISE NOTED)

FRONT ELEVATION - A1 LOT - 53 SCALE: 3/16" = 1'-0" LUCAS TH

FRONT ELEVATION - B1 LOT - 54 SCALE: 3/16" = 1'-0" LUCAS TH

FRONT ELEVATION - A1 LOT - 55 SCALE: 3/16" = 1'-0" LUCAS TH

FRONT ELEVATION - B1 LOT - 56 SCALE: 3/16" = 1'-0" LUCAS TH

FRONT ELEVATION - A1 LOT - 57 SCALE: 3/16" = 1'-0" LUCAS TH

FRONT ELEVATION - B1 LOT - 58 SCALE: 3/16" = 1'-0" LUCAS TH

TrueHomes
IT'S ALL ABOUT U
2649 Brekonridge Centre Dr.
Suite 104
Monroe, N.C. 28110
704-271-1191

BUIES CREEK TOWNHOMES
6 UNIT
LOTS 53-58

LUCAS TH
1340

HARNETT COUNTY

Copyright True Homes L.L.C.. All rights reserved. The duplication, reproduction, copying, sale, rental, licensing, or any other distribution or use of these drawings, any portion there of, or the plans depicted heron is strictly prohibited.

PREPARED BY: Michael

DATE: 1.3.24

SCALE: AS SHOWN

REVIEWED BY: Chuck

SHEET: A4.1

SEE ROOF FRAMING PLANS FOR OVERHANG DIMENSIONS AND DORMER LOCATIONS

1x4 TRIM WHERE SHOWN AT WINDOWS AND DOORS UNLESS OTHERWISE NOTED

EXTERIOR MATERIAL LEGEND

- B-N-B SIDING
- SHAKE SIDING
- HORIZONTAL SIDING
- BRICK
- STONE
- METAL ROOF
- ROOF SHINGLE
- SCALLOP SIDING

KEY NOTES

- 1.5 FLASHING
- 1.7 VINYL SHUTTER
- 2.4 BRICKMOLD TRIM
- 2.1 1X4 TRIM BOARD
- 2.3 1X6 TRIM BOARD
- 2.5 1X8 TRIM BOARD
- 2.6 1X10 FRIEZE BOARD
- 3.1 1-1/2" THICK STONE CAP
- 3.5 ROWLOCK SILL
- 3.7 BRICK JACK ARCH
- 3.8 SOLDIER COURSE
- 4.1 PRECAST KEYSTONE

ELEVATION CODE

EXTERIOR UNIT	A & B
INTERIOR UNIT	C, D, E
LAYER 1	SIDING
LAYER 2	BRICK
LAYER 3	STONE
FULL PORCH	P
FORWARD	F
BACK	B

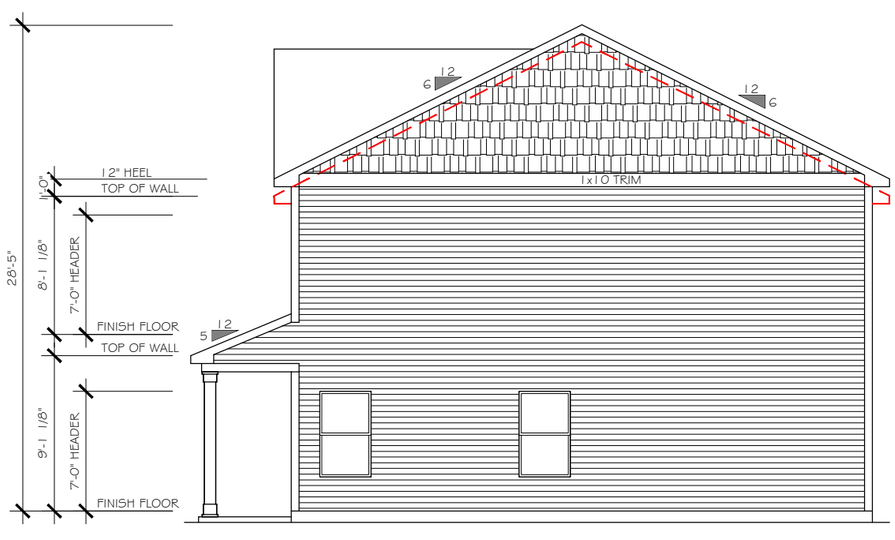

RIGHT ELEVATION — LOT - 58

SCALE: 3/16" = 1'-0" — LUCAS TH

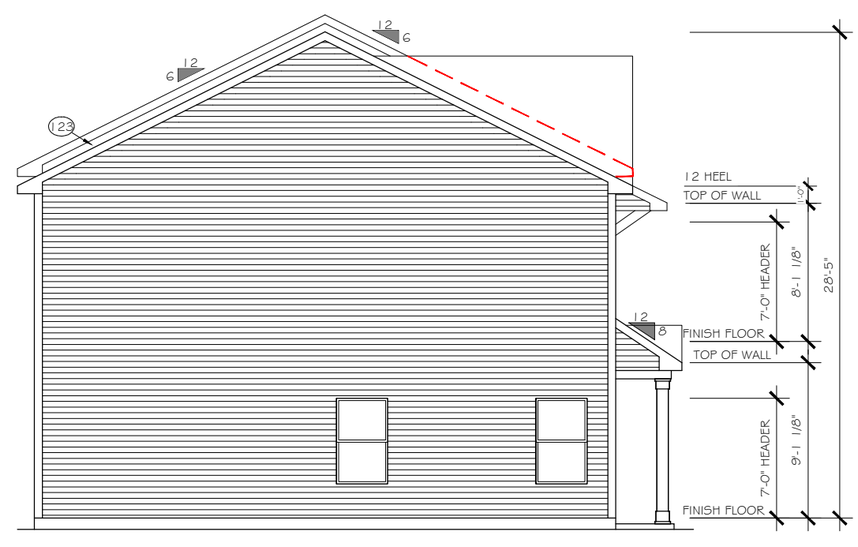

LEFT ELEVATION — LOT - 53

SCALE: 3/16" = 1'-0" — LUCAS TH

TrueHomes
IT'S ALL ABOUT U
2649 Brekonridge Centre Dr.
Suite 104
Monroe, N.C. 28110
704-271-1191

BUIES CREEK TOWNHOMES
6 UNIT
LOTS 53-58

LUCAS TH
1340

HARNETT COUNTY

Copyright True Homes L.L.C. All rights reserved. The duplication, reproduction, copying, sale, rental, licensing, or any other distribution or use of these drawings, any portion there of, or the plans depicted hereon is strictly prohibited.

PREPARED BY: Michael

DATE: 1.3.24

SCALE: AS SHOWN

REVIEWED BY: Chuck

SHEET: A4.2

ELECTRICAL LEGEND

LOW VOLTAGE LEGEND

TEC CAN

- 36" WHIP IN WALL
- (NO OUTLET)

HD LINK

5' AFF HD-L — HD-L

- CHASE PIPE
- *HDMI CABLE*
- *2 CAT5E DATA*
- *TV/DATA JACK*
- *110v OUTLET (RECESSED AFF)*
- *110v OUTLET (STANDARD)*

CHASE PIPE

5' AFF CH-P — CH-P

- CHASE PIPE WALL PLATES
- (OUTLET SEPARATE)

S	SPEAKER
PWS	PRE-WIRE FOR SPEAKER
●	WALL PLATE CONTROL

CHECK SELECTIONS FOR COMPLETE LOW VOLTAGE LAYOUT.

LOW VOLTAGE TRADE RESPONSIBLE FOR LOCATING AND INSTALLING ALL SELECTED PRODUCTS.

INDICATES ADDITIONAL OUTLET PER CLIENT	WP	OUTLET 110V WATER PROOF	USB	DUAL USB OUTLET (3.1 AMP)	S C D O	SMOKE / CO DETECTOR	4	4-WAY SWITCH	H	HANGING LIGHT	MINI-CAN LIGHT
	GFI GFI	OUTLET 110V (D=DEDICATED CIRCUIT)	GFI GFI	OUTLET 110V GFI (D=DEDICATED CIRCUIT)	TV	TV WALL JACK	S D	SMOKE DETECTOR		PUSH BUTTON	J	JUNCTION BOX / PREWIRE
5' AFF		RECESSED OUTLET 110V		FLOOR OUTLET 110V		PHONE / DATA JACK		SWITCH		DIMMER SWITCH	R	RECESSED CAN LIGHT
		OUTLET 220V (D=DEDICATED CIRCUIT)		SWITCHED OUTLET	T	THERMOSTAT	3	3-WAY SWITCH		CEILING LIGHT		LED DISC LIGHT

	WALL MOUNT LIGHT FIXTURE		FLOOD LIGHT - LOCATION TO BE VERIFIED IN FIELD WITH BUILDER/CLIENT		ELECTRIC PANEL (METER LOCATION MAY VARY)	CLG. FAN PRE-WIRE	CEILING FAN PRE-WIRE OR FIXTURE AS NOTED
	VP	VAPOR PROOF CAN LIGHT		KEYLESS ENTRY	77" AFF WP GFI TV	EXT. RECESSED OUTLET & TV w/ COVER	
P	WALL SCONCE (STD 72" AFF UNO)		DISC.	DISCONNECT BOX	HTC	DED. HOT TUB CIRCUIT (50amp, 240v GFI)	
	EXHAUST FAN		240v 50 AMP GFI	EV CHARGING OUTLET (50amp, 240v GFI)			
	PENDANT LIGHT (6'-7" AFF STD)		EXHAUST FAN / LIGHT				

CHECK SELECTIONS FOR CPI LAYOUT. ALL TV, PHONE, CABLE, AUDIO, AND SECURITY SYSTEM OUTLETS WILL BE LOCATED PER CPI LAYOUT, REGARDLESS OF WHETHER TV AND PHONE ARE SHOWN.

ELEC. QTY. – FULL PORCH (PER UNIT)

Count	Name	Visibility1
2	Ceiling Fan 1.1	w/ Flush Mount Std.
3	Detectors	Smoke Detector
2	Detectors	Smoke/Carbon Monoxide Detector
2	Jacks	TV Jack
2	Jacks	Phone Jack
2	Jacks	Thermostat
3	Lights	Pendant Light
2	Lights	Exhaust Fan/Light
3	Lights	Ceiling Light
1	Lights	Hanging Light
13	Lights	LED Ceiling Light
1	Lights	Exhaust Fan
4	Lights	Carriage Light
8	Receptacle	GFI
24	Receptacle	110V
3	Receptacle	WP
2	Receptacle 2	DIMMER 3-WAY
2	switch	4-Way Switch
8	switch	3-Way Switch
19	switch	Single Pole Switch

ELEC. QTY. – PARTIAL PORCH (PER UNIT)

Count	Name	Visibility1
2	Ceiling Fan 1.1	w/ Flush Mount Std.
3	Detectors	Smoke Detector
2	Detectors	Smoke/Carbon Monoxide Detector
2	Jacks	TV Jack
2	Jacks	Phone Jack
2	Jacks	Thermostat
3	Lights	Pendant Light
2	Lights	Exhaust Fan/Light
3	Lights	Ceiling Light
1	Lights	Hanging Light
12	Lights	LED Ceiling Light
1	Lights	Exhaust Fan
4	Lights	Carriage Light
8	Receptacle	GFI
24	Receptacle	110V
3	Receptacle	WP
2	Receptacle 2	DIMMER 3-WAY
2	switch	4-Way Switch
8	switch	3-Way Switch
19	switch	Single Pole Switch

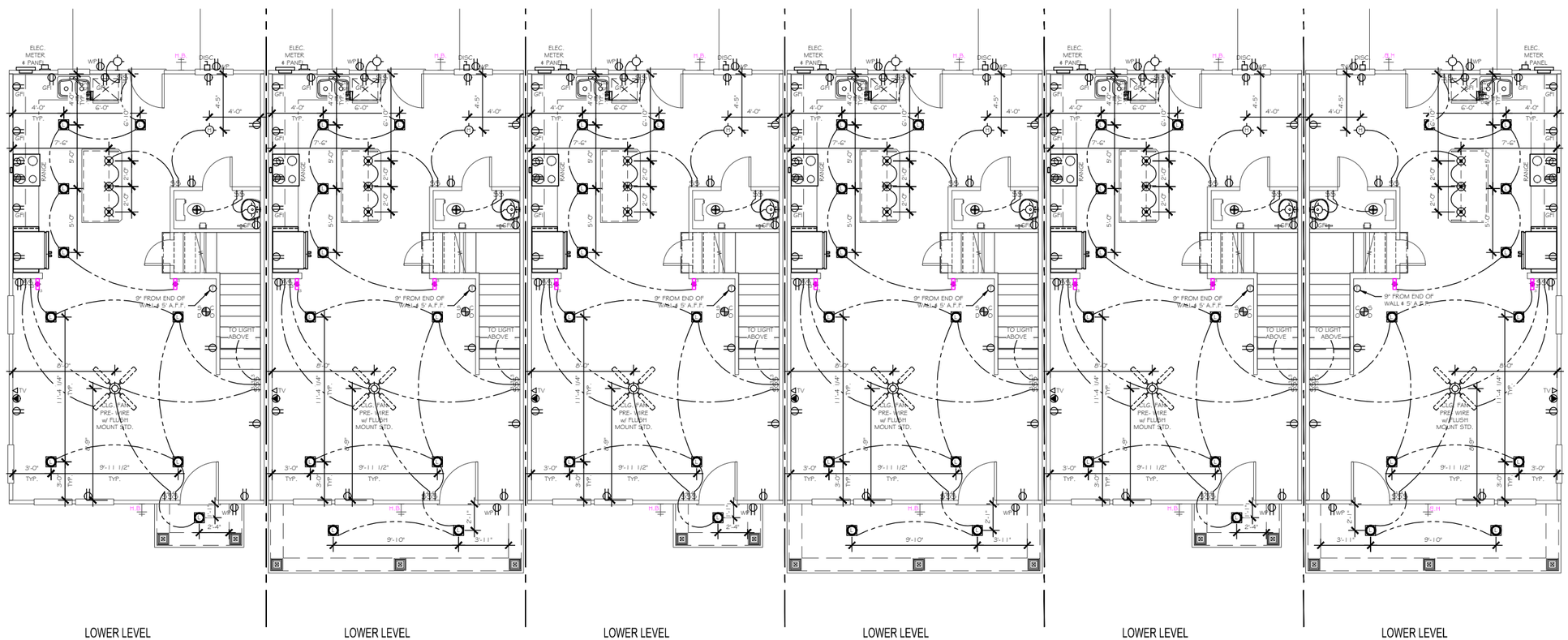

LOWER LEVEL
1340 - ELECTRICAL PLAN LOT - 53
SCALE: 3/16" = 1'-0" LUCAS TH

LOWER LEVEL
1340 - ELECTRICAL PLAN LOT - 54
SCALE: 3/16" = 1'-0" LUCAS TH

LOWER LEVEL
1340 - ELECTRICAL PLAN LOT - 55
SCALE: 3/16" = 1'-0" LUCAS TH

LOWER LEVEL
1340 - ELECTRICAL PLAN LOT - 56
SCALE: 3/16" = 1'-0" LUCAS TH

LOWER LEVEL
1340 - ELECTRICAL PLAN LOT - 57
SCALE: 3/16" = 1'-0" LUCAS TH

LOWER LEVEL
1340 - ELECTRICAL PLAN LOT - 58
SCALE: 3/16" = 1'-0" LUCAS TH

TrueHomes
IT'S ALL ABOUT U
2649 Brekonridge Centre Dr.
Suite 104
Monroe, N.C. 28110
704-271-1191

BUIES CREEK TOWNHOMES
6 UNIT
LOTS 53-58

LUCAS TH
1340

HARNETT COUNTY

Copyright True Homes L.L.C.. All rights reserved. The duplication, reproduction, copying, sale, rental, licensing, or any other distribution or use of these drawings, any portion there of, or the plans depicted hereon is strictly prohibited.

PREPARED BY: Michael

DATE: 1.3.24

SCALE: AS SHOWN

REVIEWED BY: Chuck

SHEET: E1

ELECTRICAL LEGEND

LOW VOLTAGE LEGEND

TEC CAN

- 36" WHIP IN WALL
- (NO OUTLET)

HD LINK

5' AFF HD-L — HD-L

- CHASE PIPE
- *HDMI CABLE*
- *2 CAT5E DATA*
- *TV/DATA JACK*
- *110v OUTLET (RECESSED AFF)*
- *110v OUTLET (STANDARD)*

CHASE PIPE

5' AFF CH-P — CH-P

- CHASE PIPE WALL PLATES
- (OUTLET SEPARATE)

S	SPEAKER
PWS	PRE-WIRE FOR SPEAKER
●	WALL PLATE CONTROL

CHECK SELECTIONS FOR COMPLETE LOW VOLTAGE LAYOUT.

LOW VOLTAGE TRADE RESPONSIBLE FOR LOCATING AND INSTALLING ALL SELECTED PRODUCTS.

INDICATES ADDITIONAL OUTLET PER CLIENT	WP OUTLET 110V WATER PROOF	USB DUAL USB OUTLET (3.1 AMP)	S C D O SMOKE / CO DETECTOR	4 4-WAY SWITCH	H HANGING LIGHT	MINI-CAN LIGHT	WALL MOUNT LIGHT FIXTURE	FLOOD LIGHT - LOCATION TO BE VERIFIED IN FIELD WITH BUILDER/CLIENT	ELECTRIC PANEL (METER LOCATION MAY VARY)	CLG. FAN PRE-WIRE CEILING FAN PRE-WIRE OR FIXTURE AS NOTED
OUTLET 110V (D=DEDICATED CIRCUIT)	GFI GFI OUTLET 110V GFI (D=DEDICATED CIRCUIT)	TV TV WALL JACK	S D SMOKE DETECTOR	PUSH BUTTON	J JUNCTION BOX / PREWIRE	UNDER CABINET LIGHT	VP VAPOR PROOF CAN LIGHT	KEYLESS ENTRY	77" AFF WP GFI TV EXT. RECESSED OUTLET & TV w/ COVER	
5' AFF RECESSED OUTLET 110V	FLOOR OUTLET 110V	PHONE / DATA JACK	SWITCH	DIMMER SWITCH	R RECESSED CAN LIGHT	P WALL SCONCE (STD 72" AFF UNO)	EXHAUST FAN	DISC. DISCONNECT BOX	HTC DED. HOT TUB CIRCUIT (50amp, 240v GFI)	
OUTLET 220V (D=DEDICATED CIRCUIT)	SWITCHED OUTLET	T THERMOSTAT	3 3-WAY SWITCH	CEILING LIGHT	LED DISC LIGHT	PENDANT LIGHT (6'-7" AFF STD)	EXHAUST FAN / LIGHT	D 240v 50 AMP GFI EV CHARGING OUTLET (50amp, 240v GFI)		

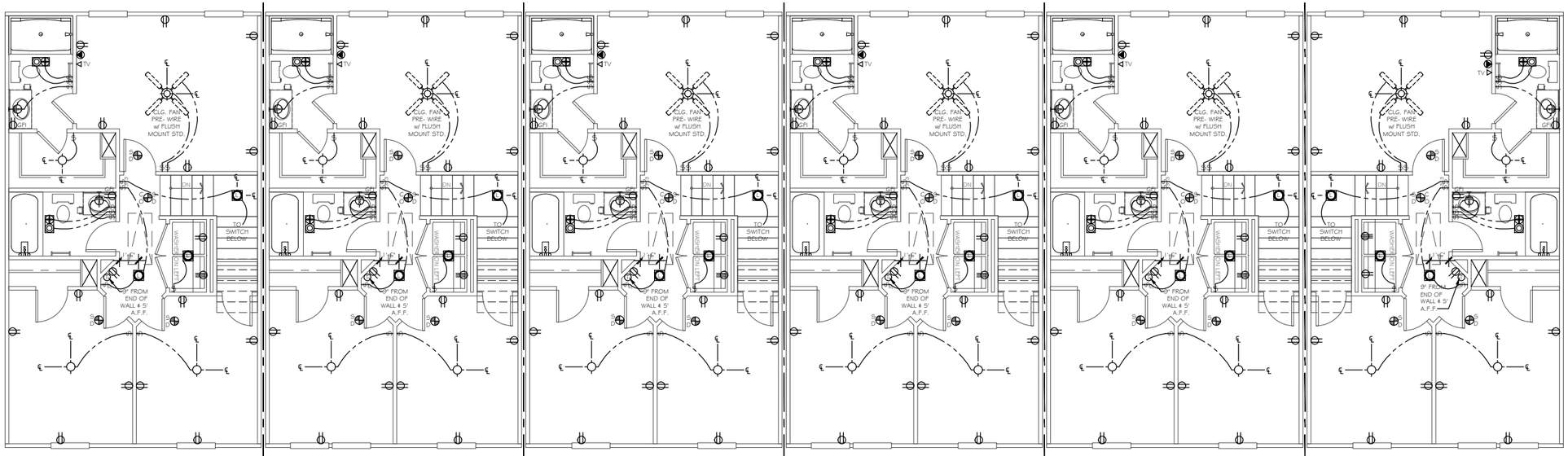

UPPER LEVEL
1340 - ELECTRICAL PLAN LOT - 53
SCALE: 3/16" = 1'-0" LUCAS TH

UPPER LEVEL
1340 - ELECTRICAL PLAN LOT - 54
SCALE: 3/16" = 1'-0" LUCAS TH

UPPER LEVEL
1340 - ELECTRICAL PLAN LOT - 55
SCALE: 3/16" = 1'-0" LUCAS TH

UPPER LEVEL
1340 - ELECTRICAL PLAN LOT - 56
SCALE: 3/16" = 1'-0" LUCAS TH

UPPER LEVEL
1340 - ELECTRICAL PLAN LOT - 57
SCALE: 3/16" = 1'-0" LUCAS TH

UPPER LEVEL
1340 - ELECTRICAL PLAN LOT - 58
SCALE: 3/16" = 1'-0" LUCAS TH

TrueHomes
IT'S ALL ABOUT U
2649 Brekonridge Centre Dr.
Suite 104
Monroe, N.C. 28110
704-271-1191

BUIES CREEK TOWNHOMES
6 UNIT
LOTS 53-58

LUCAS TH
1340

HARNETT COUNTY

Copyright True Homes L.L.C.. All rights reserved. The duplication, reproduction, copying, sale, rental, licensing, or any other distribution or use of these drawings, any portion there of, or the plans depicted hereon is strictly prohibited.

PREPARED BY: Michael

DATE: 1.3.24

SCALE: AS SHOWN

REVIEWED BY: Chuck

SHEET: E2

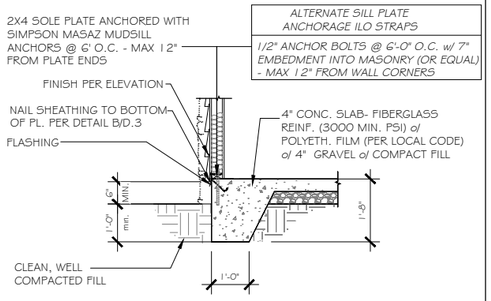

SCALE: 1/4" = 1'-0"

A TYP. SLAB HOUSE TO GRADE

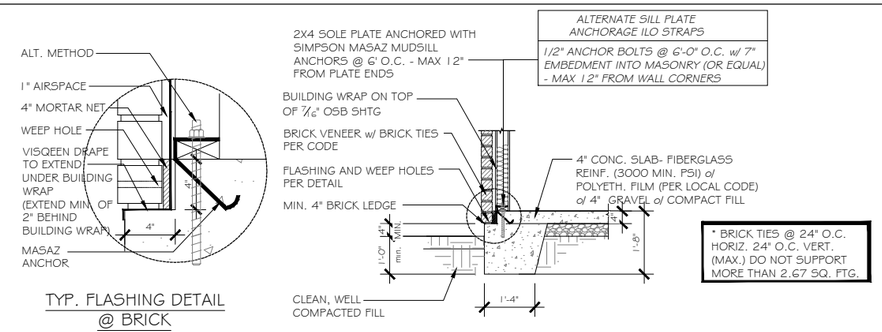

SCALE: 1/4" = 1'-0"

B TYP. SLAB HOUSE TO GRADE w/ BRICK

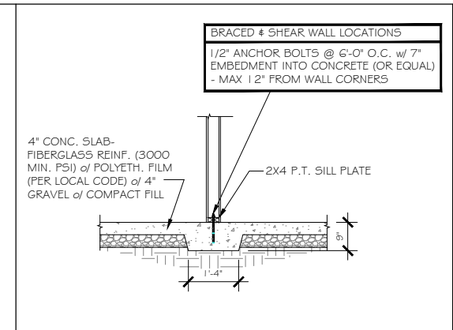

SCALE: 1/4" = 1'-0"

D TYP. THICKENED SLAB DETAIL

USP CONVERSION CHART	
REF NO.	USP
ABA44Z	PA44E-TZ
BC52-2/4	BC4010-TZ
CS-16	R5150
DTT2Z-SDS2.5	DTB-TZ
H2.5A	RT7
H2.5A	RT7A
LS-30	MP3
LSTA24	LSTA24
MASAZ	FA3-TZ
STHD14	STAD14
HHUS410	THD410
A24	TDL5
A21	JA1
LSU26	LSSH15-TZ
EPB44	EPB4408
BC6	C66
BC4	C44
LU528-2	JU528-2
LU526	JU526
ABA66	PA66E-TZ
CS22	RS-22R
HDU4-SDS	PHD4A
EPB66T	EPB6608
HDQ8-SD3Z	PHD8
LSTA36	LSTA36
A34	MP34

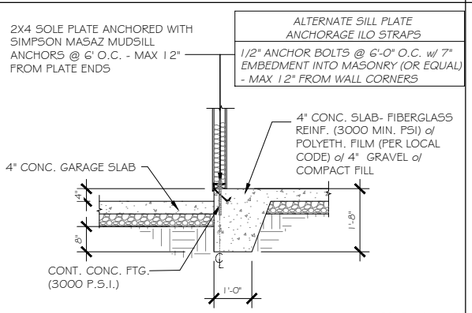

SCALE: 1/4" = 1'-0"

E TYP. SLAB - HOUSE TO GARAGE

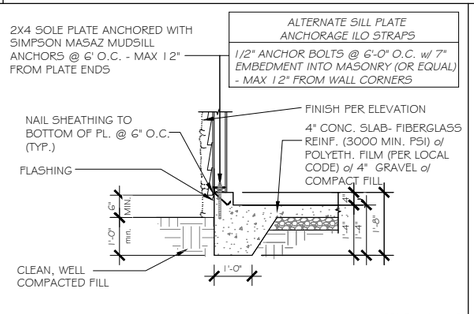

SCALE: 1/4" = 1'-0"

F TYP. SLAB - GARAGE TO GRADE

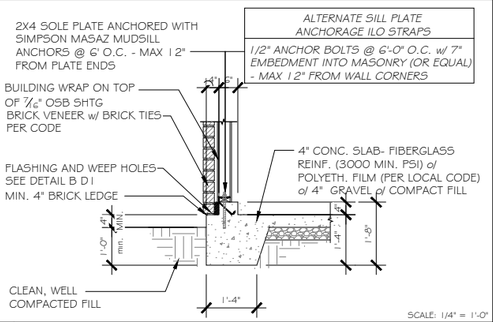

SCALE: 1/4" = 1'-0"

G TYP. SLAB - GARAGE TO GRADE w/ BRICK

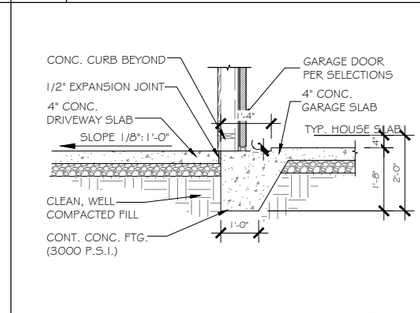

SCALE: 1/4" = 1'-0"

I TYP. GARAGE TO DRIVE

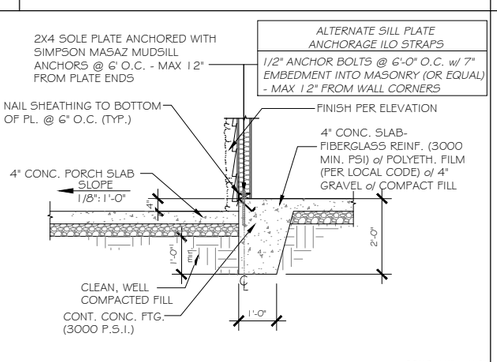

SCALE: 1/4" = 1'-0"

L TYP. SLAB - HOUSE TO PORCH

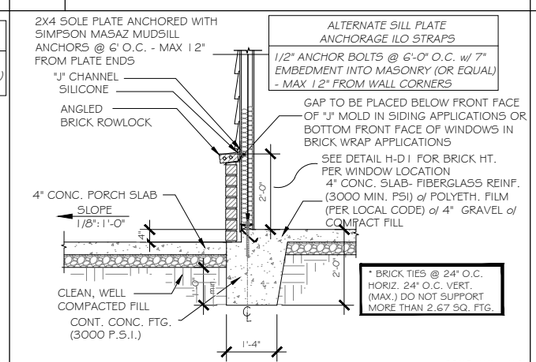

SCALE: 1/4" = 1'-0"

N TYP. SLAB - WAINSCOTING BRICK DETAIL @ PORCH

SCALE: 1/4" = 1'-0"

P TYP. PORCH END DETAIL

Q PORCH END DETAIL w/ BRICK

R PORCH END DETAIL w/ STONE

S ALTERNATE TURN DOWN FOUNDATION
(USED WHEN TURN DOWN EXCEEDS 42". POURED WALL NOT TO EXCEED 60")

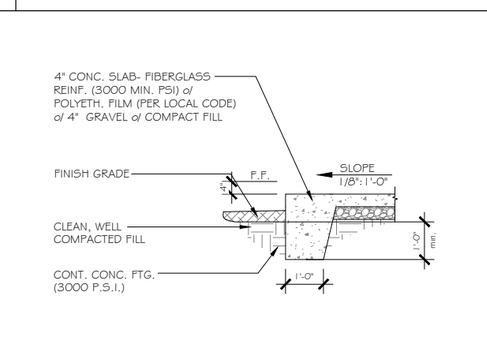

T TYP. SLAB - GARAGE TO GRADE (MONO STEM)

TrueHomes
IT'S ALL ABOUT U
2649 Brekonridge Centre Dr.
Suite 104
Monroe, N.C. 28110
704-271-1191

BUIES CREEK TOWNHOMES

DETAILS

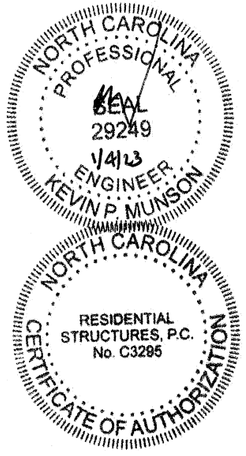

LUCAS TH
1340

HARNETT COUNTY

RESIDENTIAL STRUCTURES, P.C.
3410 N. Davidson St.
Charlotte, N.C. 28205
Seal For Structural Only

Copyright True Homes L.L.C.. All rights reserved. The duplication, reproduction, copying, sale, rental, licensing, or any other distribution or use of these drawings, any portion there of, or the plans depicted hereon is strictly prohibited.

PREPARED BY: Michael
DATE: 1.3.24
SCALE: AS SHOWN
REVIEWED BY: Chuck

SHEET: D1

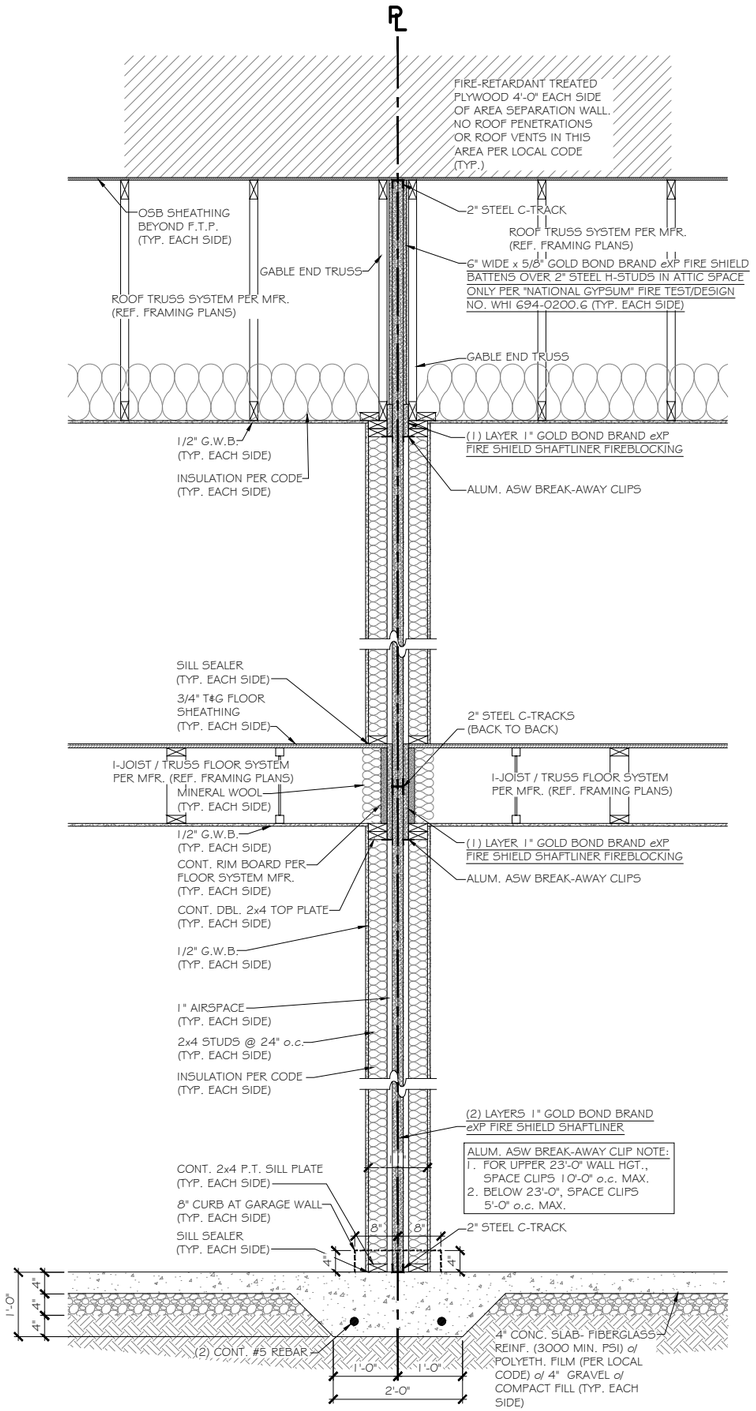

A TYP. 2-HOUR AREA SEPARATION FIRE WALL SECTION
UL U347 N.T.S.

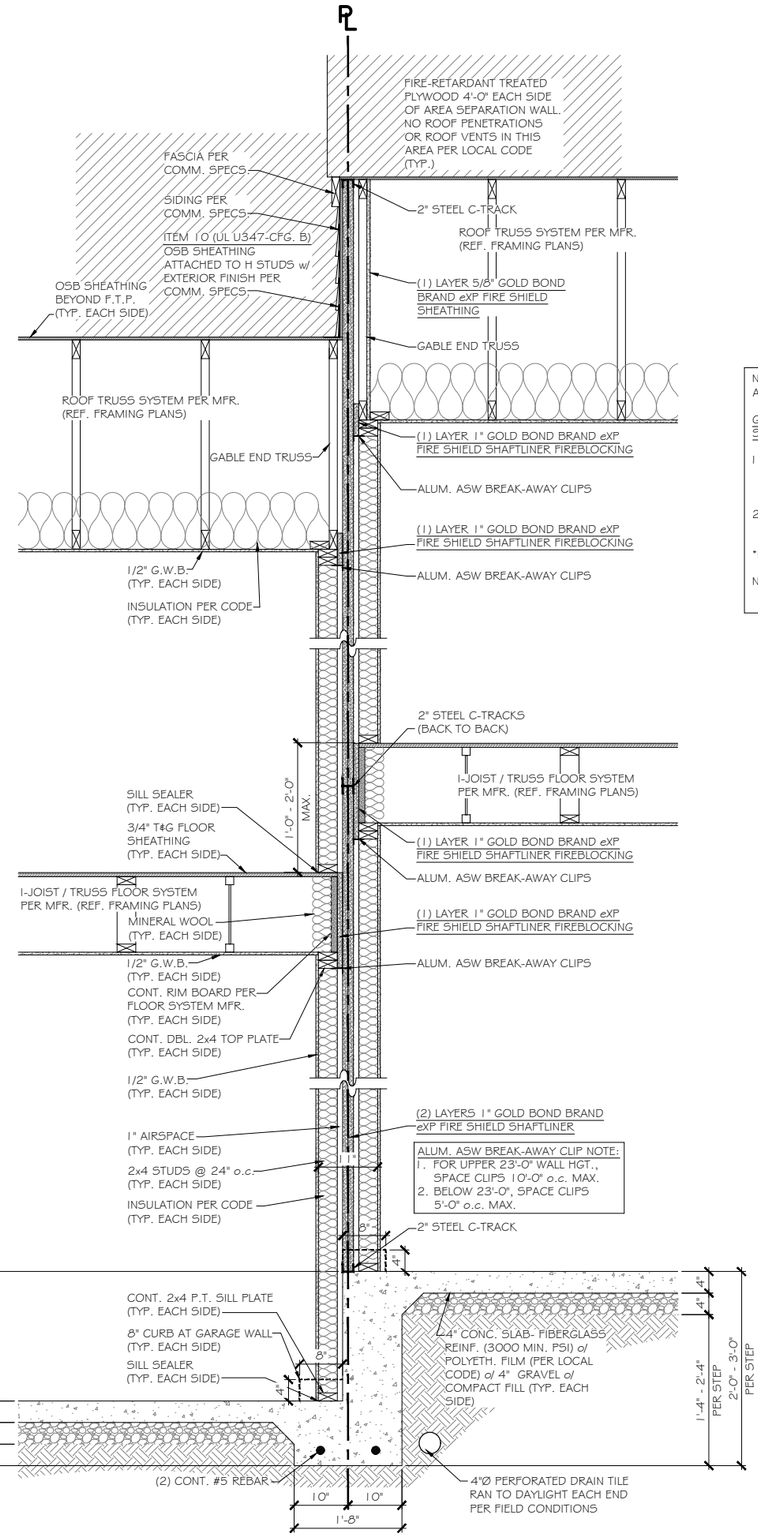

B TYP. 2-HOUR AREA SEPARATION FIRE WALL SECTION @ STEPPED SLAB
UL U347 N.T.S.

SEE DETAIL B/D10

F TYP. SOFFIT PROTECTION DETAIL
WITHIN 4'-0" EACH SIDE OF PROPERTY LINE N.T.S.

NOTE:
AREA SEPARATION FIRE WALL SYSTEM TO BE CONSTRUCTED PER:

GA FILE NO. ASW 0981 PROPRIETARY (REF. GA-600-2018 FIRE RESISTANCE AND SOUND CONTROL DESIGN MANUAL)

1. (2) LAYERS 1"x24" PROPIETARY TYPE "X" GYPSUM PANELS INSERTED BETWEEN 2" FLOOR AND CEILING RUNNERS w/ 2" STEEL H STUDS BETWEN ADJACENT PAIRS OF GYPSUM PANELS.
2. MIN. 3/4" AIR SPACE MUST BE MAINTAINED BETWEEN STEEL COMPONENTS AND ADJACENT FRAMING (INDICATED BY DASHED LINES IN DETAIL).

*HEIGHT LIMITATION = 66'-0" (NON-LOAD BEARING)

NATIONAL GYPSUM COMPANY - 1" GOLD BOND® BRAND eXP® FIRE SHIELD® SHAFTLINER

2-HOUR RATED DETAIL PER GA FILE NO. ASW 0981

ASSEMBLY THICKNESS
FIRE TEST:
3 1/2" WHI 694-0200.6
(2) 1" GYPSUM PANELS
(2) 3/4" MIN. AIRSPACES

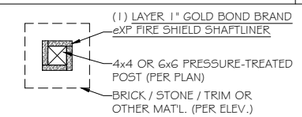

E TYP. 1-HOUR RATED COLUMN DETAIL
N.T.S.

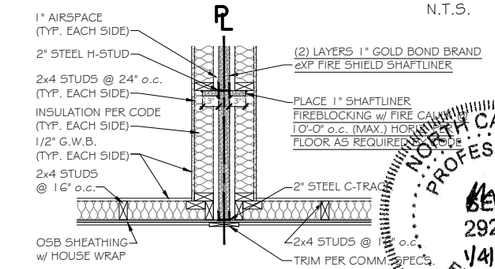

D TYP. 2-HOUR AREA SEPARATION FIRE WALL DETAIL
UL U347 N.T.S.

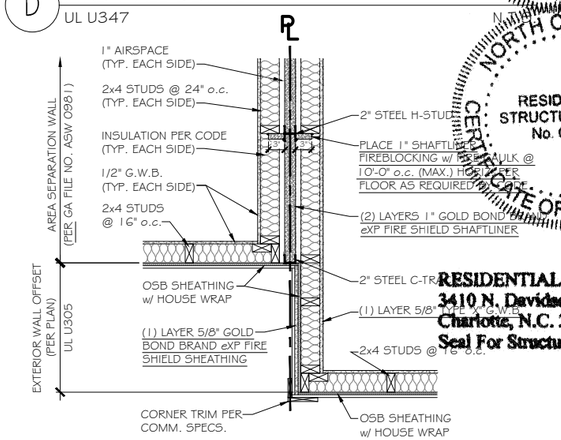

C TYP. 2-HOUR AREA SEPARATION FIRE WALL DETAIL @ OFFSET
N.T.S.

NORTH CAROLINA PROFESSIONAL SEAL 29249 ENGINEER KEVIN P MUNSON 1/4/13

NORTH CAROLINA RESIDENTIAL STRUCTURES, P.C. No. C3295 CERTIFICATE OF AUTHORIZATION

RESIDENTIAL STRUCTURES, P.C.
3410 N. Davidson St.
Charlotte, N.C. 28205
Seal For Structural Only

TrueHomes
IT'S ALL ABOUT U
2649 Brekonridge Centre Dr.
Suite 104
Monroe, N.C. 28110
704-271-1191

BUIES CREEK TOWNHOMES

DETAILS

LUCAS TH
1340

HARNETT COUNTY

Copyright True Homes L.L.C. All rights reserved. The duplication, reproduction, copying, sale, rental, licensing, or any other distribution or use of these drawings, any portion there of, or the plans depicted hereon is strictly prohibited.

PREPARED BY: Michael
DATE: 1.3.24
SCALE: AS SHOWN
REVIEWED BY: Chuck

SHEET: D2

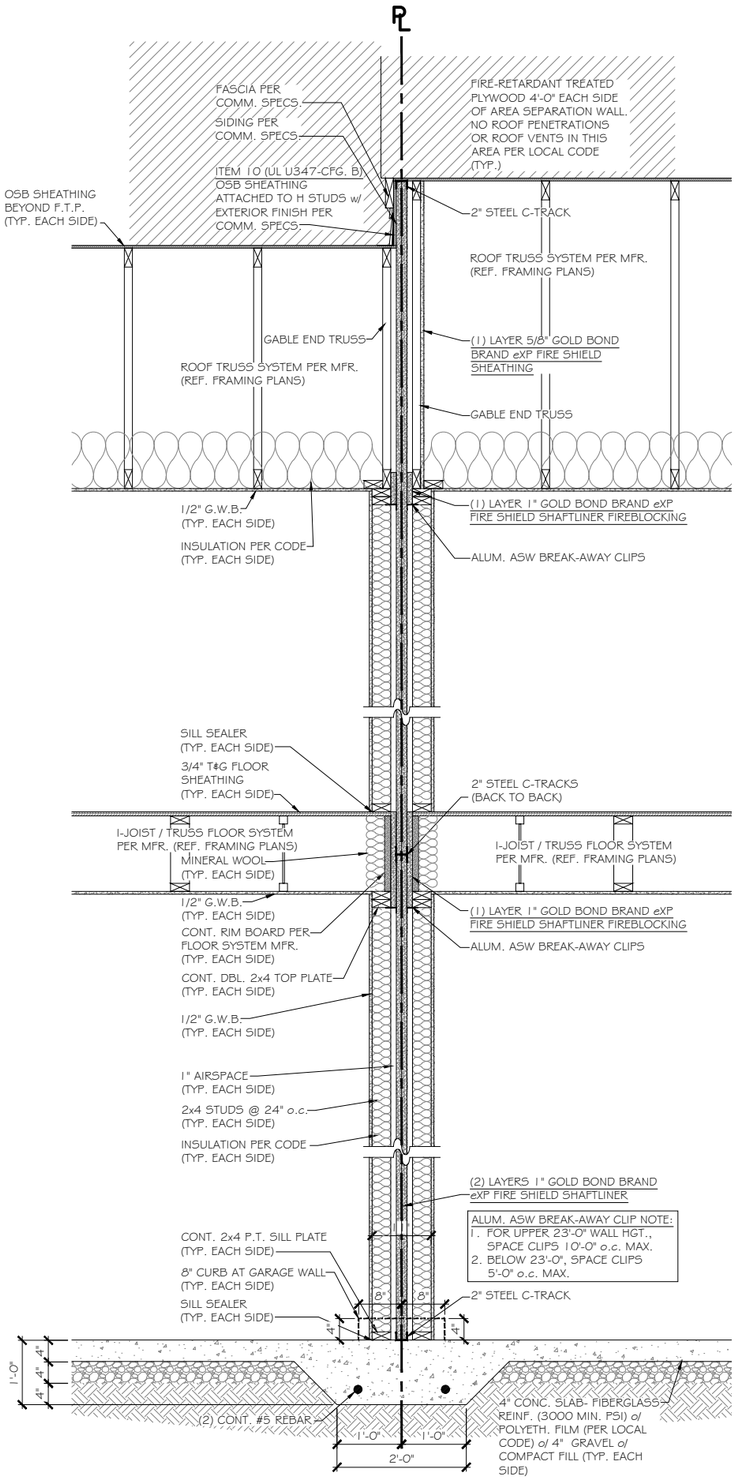

A TYP. 2-HOUR AREA SEPARATION FIRE WALL SECTION
UL U347 N.T.S.

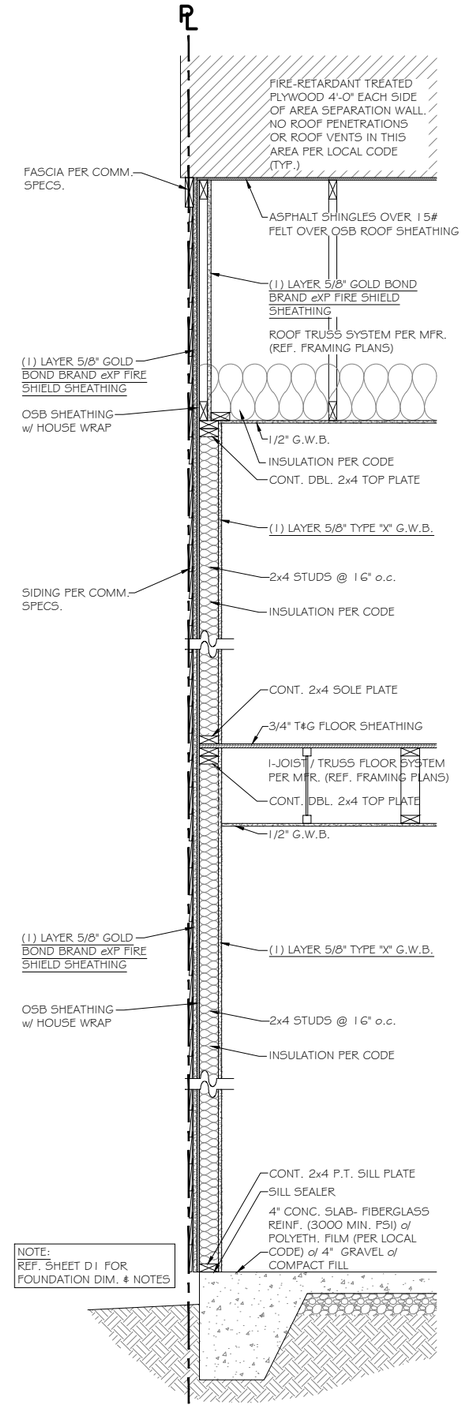

B TYP. 1-HOUR WALL SECTION @ GABLE END
UL U305 - 1-HOUR RATED WALL w/ NO OPENINGS OR PENTRATIONS ALLOWED N.T.S.

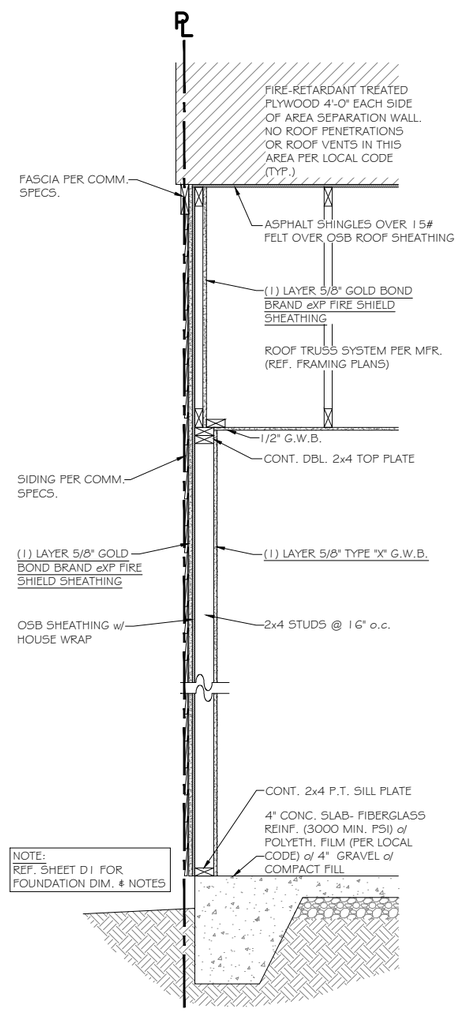

C TYP. 1-HOUR WALL SECTION @ GABLE END - GARAGE
UL U305 - 1-HOUR RATED WALL w/ NO OPENINGS OR PENTRATIONS ALLOWED N.T.S.

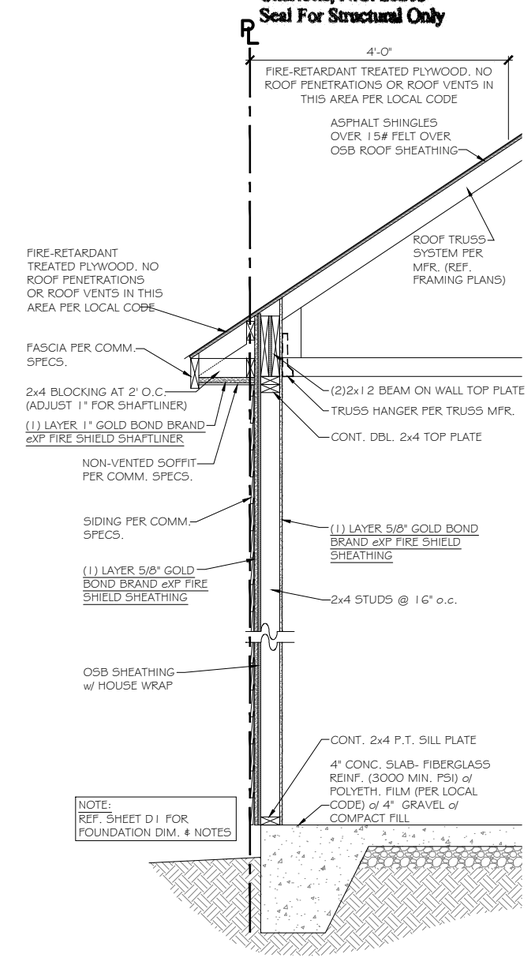

D TYP. 1-HOUR WALL SECTION @ ROOF EAVE - GARAGE
UL U305 - 1-HOUR RATED WALL w/ NO OPENINGS OR PENTRATIONS ALLOWED N.T.S.

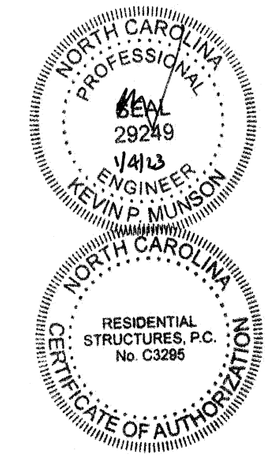

RESIDENTIAL STRUCTURES, P.C.
3410 N. Davidson St.
Charlotte, N.C. 28205
Seal For Structural Only

TrueHomes
IT'S ALL ABOUT U
2649 Brekonridge Centre Dr.
Suite 104
Monroe, N.C. 28110
704-271-1191

BUIES CREEK TOWNHOMES

DETAILS

LUCAS TH
1340

HARNETT COUNTY

Copyright True Homes L.L.C. All rights reserved. The duplication, reproduction, copying, sale, rental, licensing, or any other distribution or use of these drawings, any portion there of, or the plans depicted hereon is strictly prohibited.

PREPARED BY: Michael
DATE: 1.3.24
SCALE: AS SHOWN
REVIEWED BY: Chuck

SHEET: D3

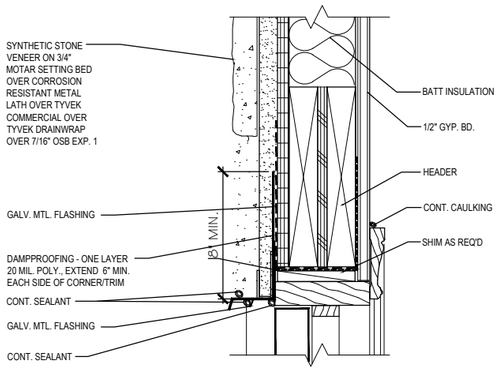

12 DOOR HEAD @ STONE
N.T.S.

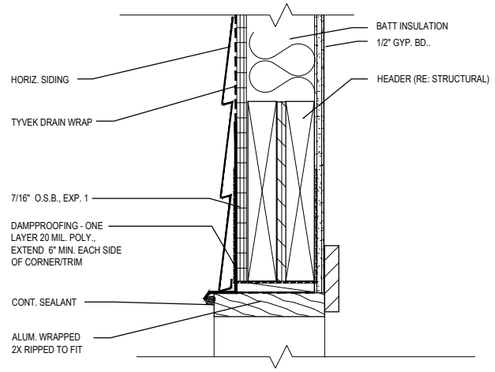

09 GARAGE DOOR HEAD @ SIDING
N.T.S.

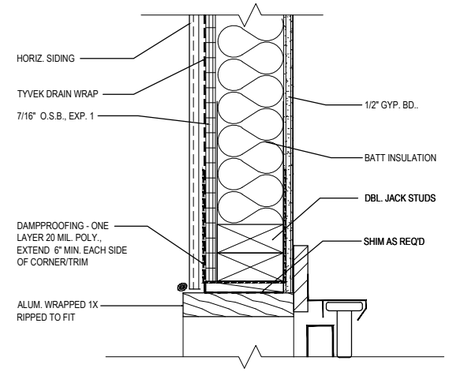

06 GARAGE DOOR JAM @ SIDING
N.T.S.

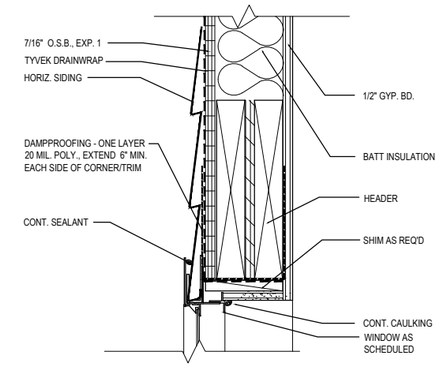

03 WINDOW HEAD @ SIDING
N.T.S.

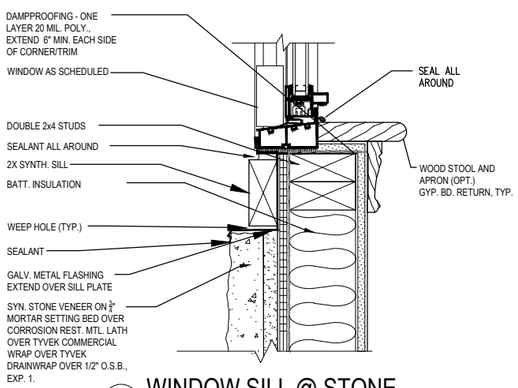

11 WINDOW SILL @ STONE
N.T.S.

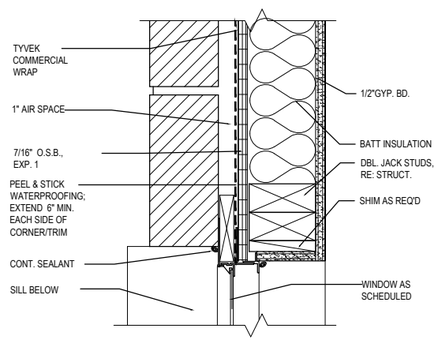

08 WINDOW JAMB @ BRICK
N.T.S.

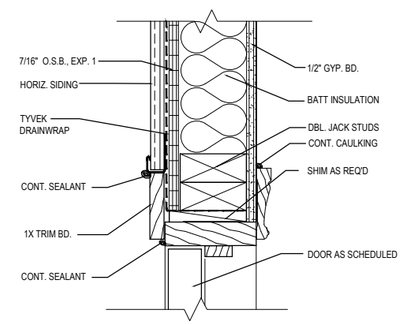

05 EXTERIOR DOOR JAM @ SIDING
N.T.S.

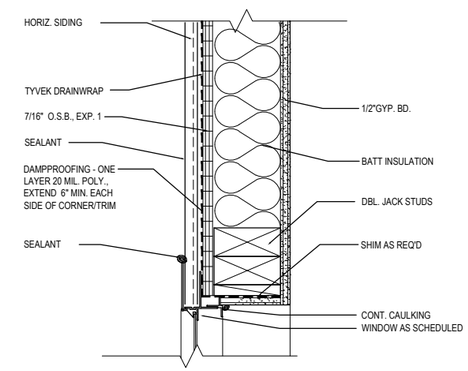

02 WINDOW JAMB @ SIDING
N.T.S.

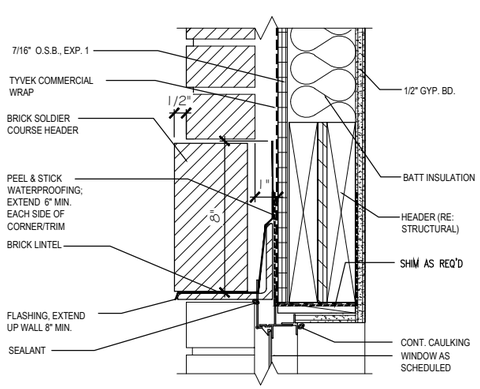

10 WINDOW HEAD @ BRICK
N.T.S.

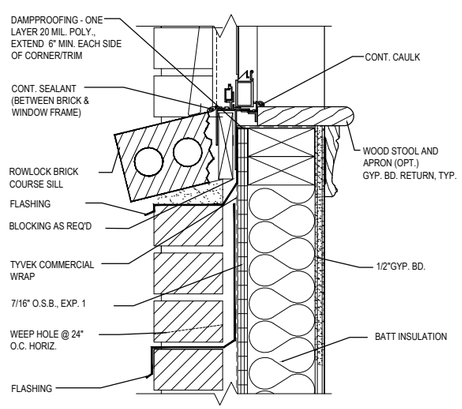

07 WINDOW SILL @ BRICK
N.T.S.

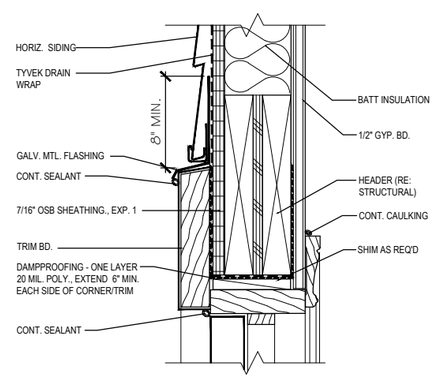

11 EXT. DOOR HEAD @ SIDING
N.T.S.

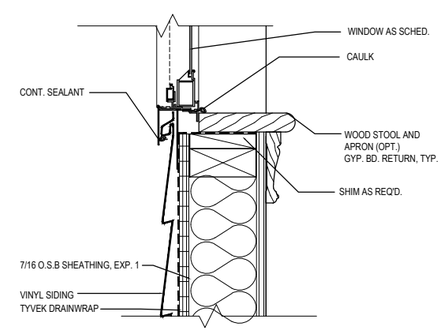

01 WINDOW SILL @ SIDING
N.T.S.

TrueHomes
IT'S ALL ABOUT U
2649 Brekonridge Centre Dr.
Suite 104
Monroe, N.C. 28110
704-271-1191

BUIES CREEK TOWNHOMES

LUCAS TH 1340

HARNETT COUNTY

DETAILS

Copyright True Homes L.L.C.. All rights reserved. The duplication, reproduction, copying, sale, rental, licensing, or any other distribution or use of these drawings, any portion there of, or the plans depicted hereon is strictly prohibited.

PREPARED BY: Michael

DATE: 1.3.24

SCALE: AS SHOWN

REVIEWED BY: Chuck

SHEET: D4

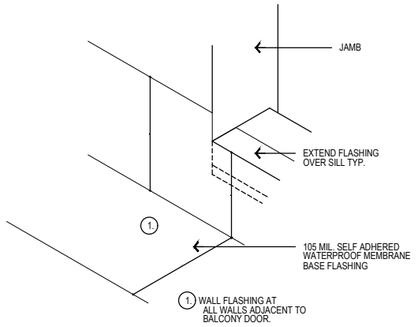

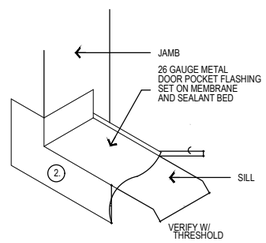

2 GALVANIZED DOOR POCKET FLASHING AT ALL DOOR OPENINGS.

NOTE:
PRIME ALL SUBSTRATES PRIOR TO ADHERING ANY FLASHING.

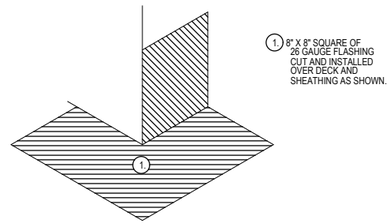

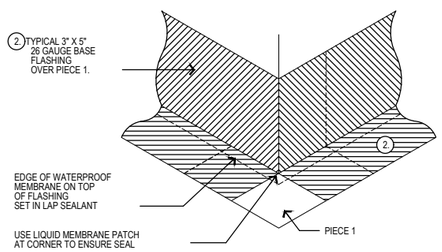

08 FLASHING DETAIL @ OUTSIDE CORNER
3" = 1'-0" (METAL FLASHING CONDITION)

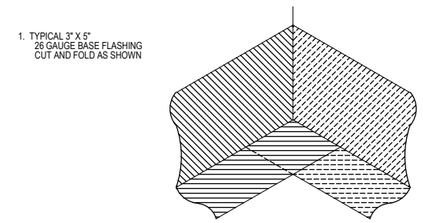

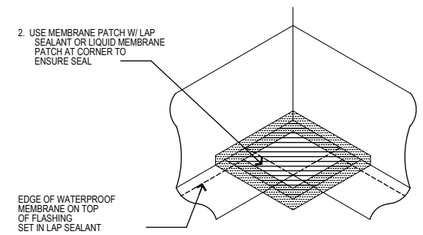

07 FLASHING DETAIL @ INSIDE CORNER
3" = 1'-0" (METAL FLASHING CONDITION)

NOTE:
MUST MEET ENERGY EFFICIENCY REQ PER SEC N1102.
PER N1102.2.4 HORIZONTAL ACCESS DOORS FROM CONDITIONED SPACE TO UNCONDITIONED SPACES SHALL BE WEATHERSTRIPPED AND INSULATED TO AN R-10 MIN. VALUE, AND VERTICAL DOORS TO SUCH SPACES SHALL BE WEATHERSTRIPPED AND INSULATED TO R-5 MIN. VALUE.

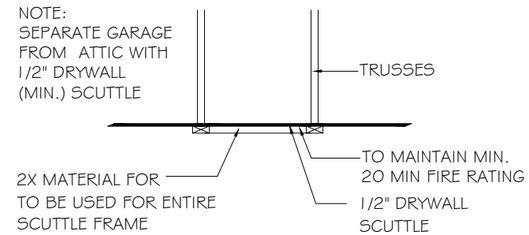

B ATTIC ACCESS PANEL DETAIL
SCALE: N.T.S.

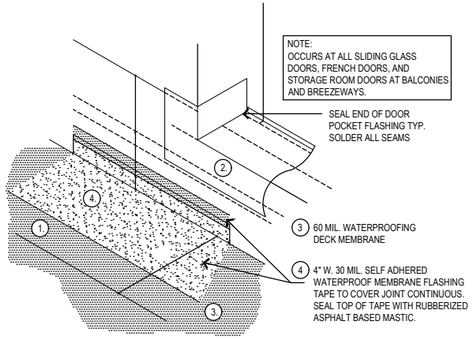

05 FLASHING @ DOOR OPENING
3" = 1'-0"

1. TYPICAL 3"x5" 26 GAUGE BASE FLASHING LAP 4" MIN.
2. 6"x8" STRIP OF WATERPROOF MEMBRANE PLACED OVER FLASHING LAP
3. APPLY LAP SEALANT AT EDGES OF WATERPROOF MEMBRANE STRIP

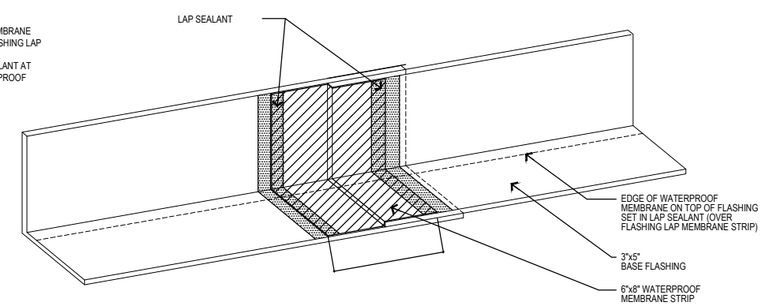

04 FLASHING LAP
3" = 1'-0" (METAL FLASHING CONDITION)

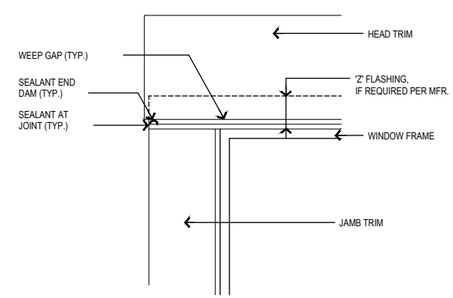

03 TYP. WINDOW ELEVATION DETAIL
3" = 1'-0"

WALL/WINDOW/DOOR WATERPROOFING SPECIFICATIONS:

1. OWNER SHALL RETAIN THE SERVICES OF A QUALITY ASSURANCE CONSULTING FIRM, SPECIALIZING IN THE AREA OF WATERPROOFING FOR THE SOLE PURPOSE OF INSPECTING FLASHINGS BEFORE COVERED WITH FINISHED MATERIALS. DETERMINATION OF PROPER FLASHING TECHNIQUES CAN BE UTILIZED VIA: BLDG. MOCK UP PANELS
2. GC TO PROVIDE DETAILED SHOP DRAWINGS: INDICATING EACH FLASHING AND EDGE DETAIL AND ATTACHMENT REQUIREMENTS.
3. USE STAINLESS STEEL FASTENERS WHEN FASTENING INTO TREATED LUMBER.
4. ALUMINUM "Z" FLASHING & THRU WALL FLASHING SHALL BE: .025" FOR CONCEALED AND .032" FOR EXPOSED
5. MINIMUM 40 MIL. POLYETHYLENE, BUTYL RUBBER "PEEL AND STICK WATERPROOFING" MIN. 240 DEGREE SOFTENING POINT
6. 6" AND 9" SELF ADHERING RUBBERIZED ASPHALT FLASHING TAPE – (WINDOW WRAP) MIN. 20 MIL THICKNESS MEETING THE FOLLOWING REQMTS.: FEDERAL SPECIFICATION UU-B-790a TYPE I, GRADE A, STYLE 4. TYVEK PRODUCTS OR EQUAL
7. SEALANT FOR DISSIMILAR MATERIAL JOINTS – SONNEBORN NPI POLYURETHANE SEALANT OR EQUAL. (EXCEPT AT WOOD.)
8. SEALANT FOR WOOD TO WOOD JOINTS AND WOOD TO DISSIMILAR MATERIAL JOINTS – SILICON ACRYLIC SEALANT.
9. SEALANT UNDER DOOR THRESHOLDS – SONNEBORN NPI POLYURETHANE SEALANT OR EQUAL.
10. ALL SEALANT BEADS AND FILLETS TO BE CONTINUOUS.
11. ALL METAL FLASHINGS ARE TO HAVE ALL OVERLAPS SEALED WITH NON-CURING BUTYL SEALANT OR POLYURETHANE SEALANT.
12. PAINT INTERIOR GYPSUM BOARD WINDOW JAMBS WITH ENAMEL PAINT.
13. SET NAILS AT ALL DOOR TRIM.
14. EXTERIOR WOOD TRIM IS TO BE PRE-PRIMED KDAT MATERIAL.

NOTE:
TYVEK COMMERCIAL BUILDING SPECIALISTS CAN BE CONTACTED FOR FREE FIELD/INSTALLATION SERVICES @ TIME OF CONSTRUCTION.
CONTACT: ANDREW ANDRETTA, CSI 704.226.2864

1. APPLY SHEATHING TO WALL FRAMING AS SHOWN ON STRUCTURAL DRAWINGS.
2. ATTACH 9" WIDE SILL SELF-ADHERING RUBBERIZED FLASHING WITH THE TOP EDGE EVEN WITH THE TOP EDGE OF THE SILL. FLASHING TO EXTEND 12" BEYOND EACH JAMB MINIMUM. ATTACH WITH GALVANIZED ROOFING NAILS TO THE TOP EDGE ONLY, LEAVING BOTTOM LOOSE. DO NOT REMOVE BACKING.
3. APPLY 9" SELF-ADHERING RUBBERIZED ASPHALT FLASHING TAPE TO EACH JAMB. START AT THE BOTTOM OF THE SILL FLASHING AND EXTEND 6" ABOVE WINDOW HEAD.
4. APPLY 9" SELF-ADHERING RUBBERIZED ASPHALT FLASHING TAPE OVER FLANGE AT HEAD. EXTEND 12" BEYOND EACH JAMB.

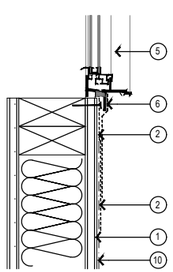

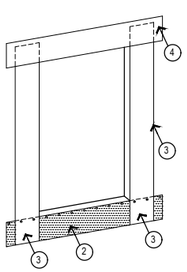

A

5. SET THE WINDOW AS PER THE WINDOW MANUFACTURER'S RECOMMENDATIONS.
6. APPLY 6" SELF-ADHERING RUBBERIZED ASPHALT FLASHING TAPE OVER FLANGE AT SILL. EXTEND TO END OF SILL FLASHING.
7. APPLY 6" SELF-ADHERING RUBBERIZED ASPHALT FLASHING TAPE OVER FLANGE AT JAMBS. START 6" BELOW SILL AND EXTEND UP, TO 6" ABOVE WINDOW FLANGE AT HEAD.
8. IF REQUIRED BY THE MFR., INSTALL GALVANIZED "Z" FLASHING AT WINDOW HEAD AND EXTEND TO BE THE LENGTH OF THE HEAD TRIM.

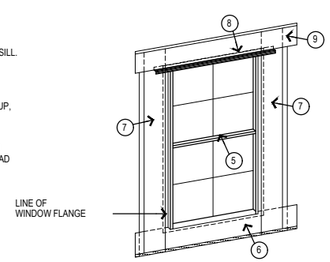

B

9. APPLY 6" SELF-ADHERING RUBBERIZED ASPHALT FLASHING TAPE OVER FLANGE AT HEAD (AND OVER "Z" FLASHING IF REQ'D BY MFR). EXTEND MIN. 12" BEYOND EACH JAMB.
10. INSTALL BUILDING PAPER STARTING FROM THE BASE OF THE BUILDING. INSTALL SHINGLE FASHION WITH MINIMUM 4" VERTICAL OVERLAPS AND 6" HORIZONTAL OVERLAPS. ATTACH BUILDING WRAP TO WOOD FRAME WITH NAILS AND CONTRACTOR CAPS PER MFR. RECOMMENDATIONS. INSTALL BUILDING PAPER UNDER SILL FLAP SHOWN IN STEP TWO. BUILDING PAPER TO OVERLAP ALL WINDOW FLANGES AND GALVANIZED "Z" FLASHING AT ALL WINDOWS.
11. SLIP BOTTOM OF JAMB AND SILL FLASHING OUT OVER THE BUILDING PAPER.
12. TAPE OVER ANY CUTS OR HOLES IN THE BUILDING PAPER.
13. IF "Z" FLASHING IS REQUIRED PER MFR., PROVIDE SEALANT END DAMS AT THE ENDS OF THE "Z" FLASHING TYPICAL. "Z" FLASHING TO SLOPE AWAY FROM BUILDING.

**REFER ALSO TO DOOR AND WINDOW DETAILS.

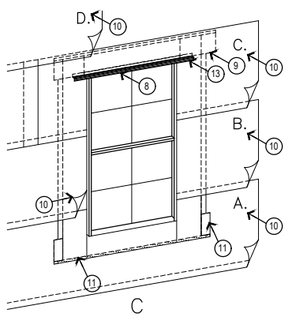

C

02 WINDOW FLASHING WITH BUILDING PAPER ON WALL

TrueHomes
IT'S ALL ABOUT U
2649 Brekonridge Centre Dr.
Suite 104
Monroe, N.C. 28110
704-271-1191

BUIES CREEK TOWNHOMES

DETAILS

LUCAS TH
1340

HARNETT COUNTY

Copyright True Homes L.L.C.. All rights reserved. The duplication, reproduction, copying, sale, rental, licensing, or any other distribution or use of these drawings, any portion there of, or the plans depicted hereon is strictly prohibited.

PREPARED BY: Michael
DATE: 1.3.24
SCALE: AS SHOWN
REVIEWED BY: Chuck

SHEET: D5

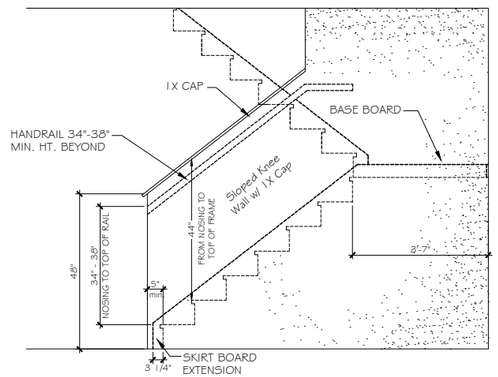

ST-1 | 48" SLOPED WALL w/ 1x CAP

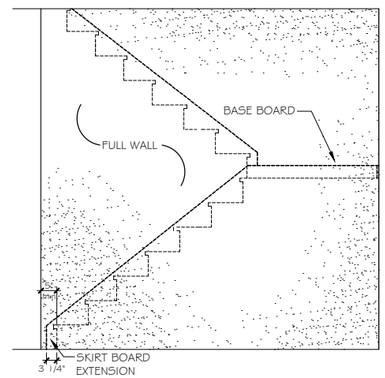

ST-2 | FULL WALL

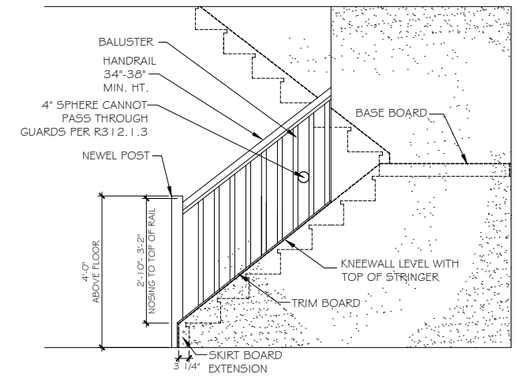

ST-3 | OPT. OPEN RAIL

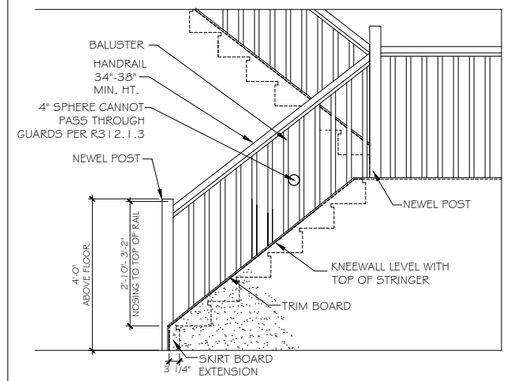

ST-4 | OPT. OPEN RAIL FULL STAIR

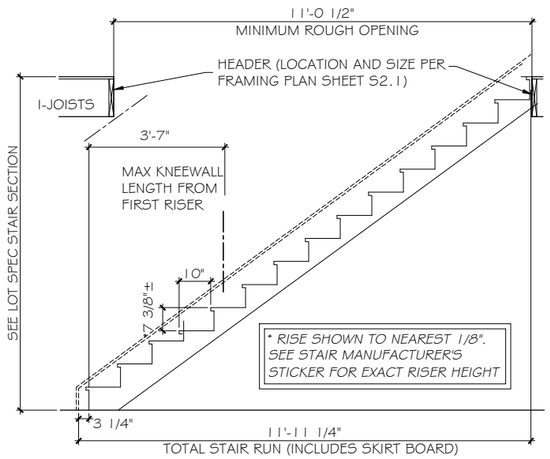

ST-5 | STRAIGHT STAIR SECTION - 8ft CEILING HEIGHT
w/ 11 7/8" FLOOR SYSTEM

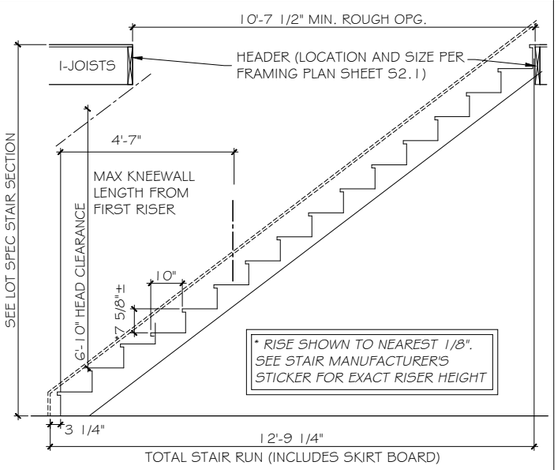

ST-6 | STRAIGHT STAIR SECTION - 9ft CEILING HEIGHT
w/ 11 7/8" FLOOR SYSTEM

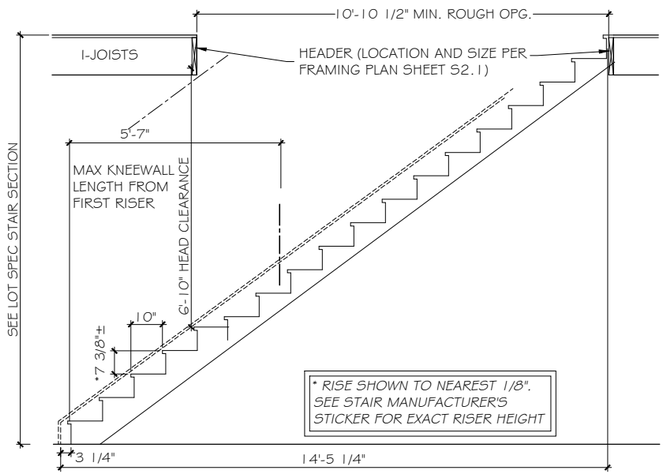

ST-7 | STRAIGHT STAIR SECTION - 10ft CEILING HEIGHT
w/ 11 7/8" FLOOR SYSTEM

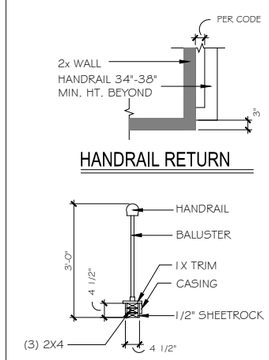

ST-8 | HANDRAILS

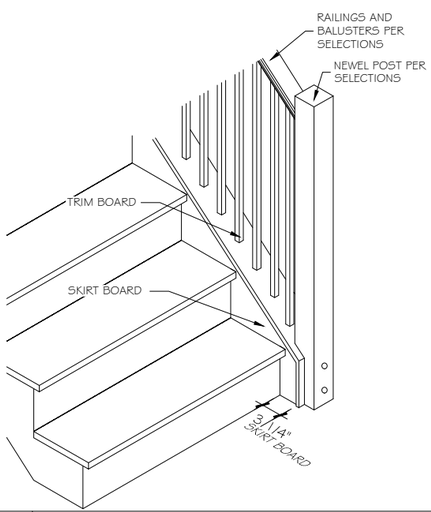

ST-9 | OPT. OPEN RAIL - ISO

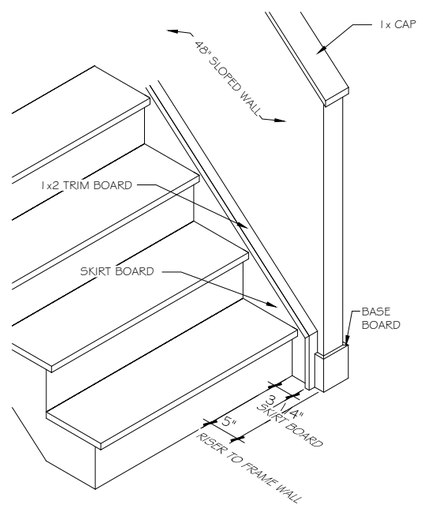

ST-10 | 48" SLOPED WALL w/ 1x CAP - ISO

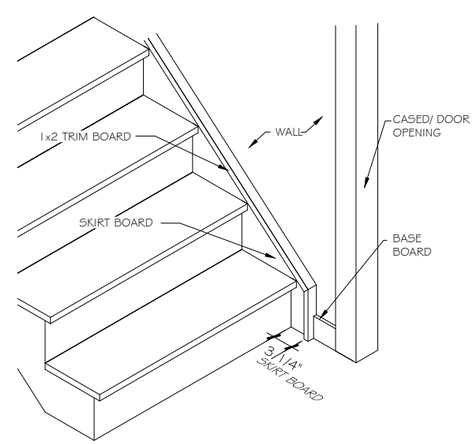

ST-11 | STAIRS @ CASED OPENING - ISO

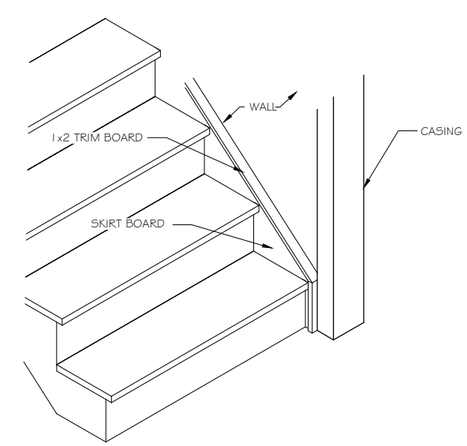

ST-12 | TRIM SKIRT BOARD @ CASED OPENING

TrueHomes
IT'S ALL ABOUT U
2649 Brekonridge Centre Dr.
Suite 104
Monroe, N.C. 28110
704-271-1191

BUIES CREEK TOWNHOMES

DETAILS

LUCAS TH
1340

HARNETT COUNTY

Copyright True Homes L.L.C.. All rights reserved. The duplication, reproduction, copying, sale, rental, licensing, or any other distribution or use of these drawings, any portion there of, or the plans depicted hereon is strictly prohibited.

PREPARED BY: Michael

DATE: 1.3.24

SCALE: AS SHOWN

REVIEWED BY: Chuck

SHEET: D5.1

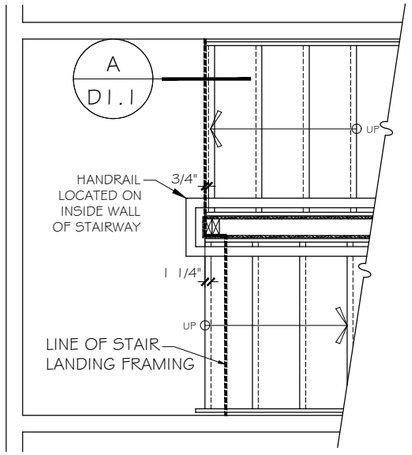

ST-13 STAIR LANDING HALF WALL w/ CAP

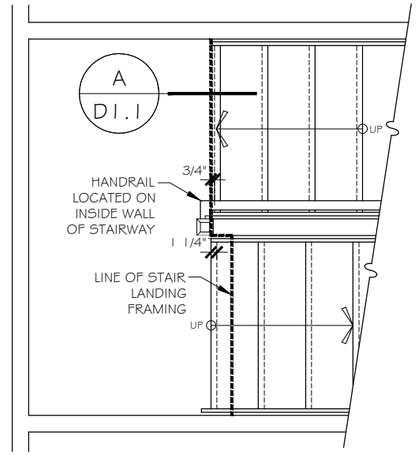

ST-14 STAIR LANDING NEWEL POST & BALUSTRADES

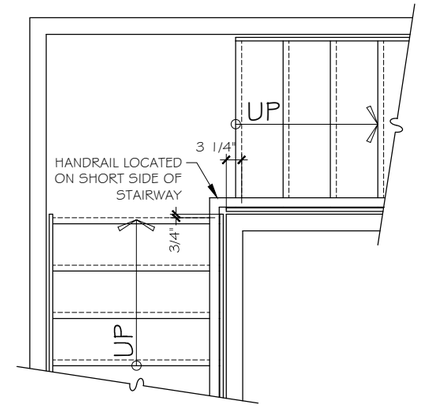

ST-15 STAIR LANDING FULL WALL

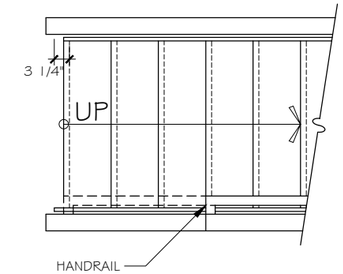

FOR STRAIGHT RUN STAIRWAYS WITHOUT AN INTERMEDIATE LANDING BETWEEN FLOORS, THE HANDRAIL SHOULD BE LOCATED ON THE SAME SIDE AS A FIRST FLOOR HALF WALL OR OPEN RAIL; IF BOTH SIDES HAVE A FIRST FLOOR HALF WALL OR OPEN RAIL, OR IF NONE EXIST, LOCATE THE HANDRAIL ON THE RIGHT SIDE OF THE STAIRWAY

ST-15a STAIR w/o INTERMEDIATE LANDING

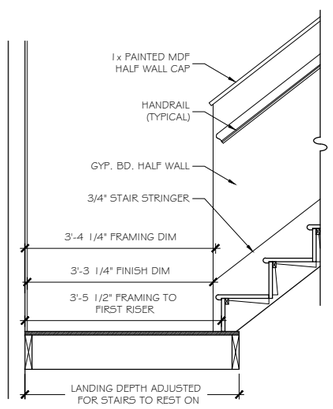

ST-17 SECTION A- SLOPED WALL

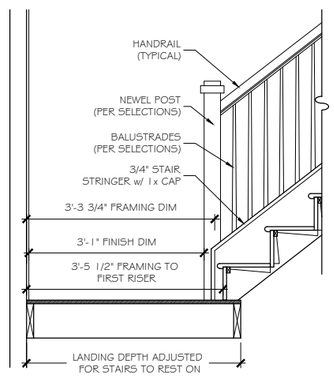

ST-18 SECTION A- OPEN RAIL

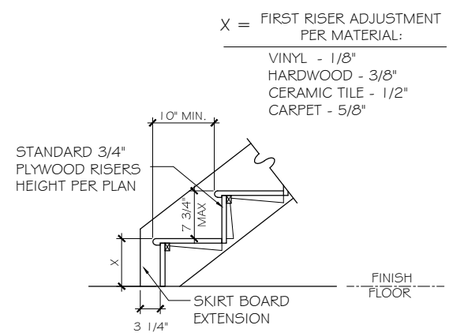

ST-19 STAIR SECTION - FIRST FLOOR

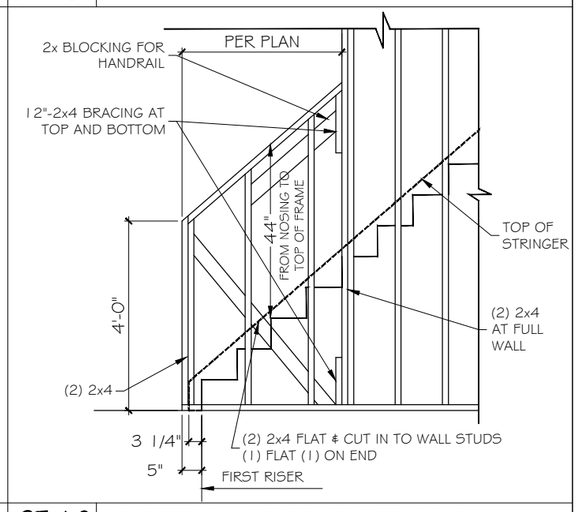

ST-16 SLOPED WALL @ STAIRS - FRAMING

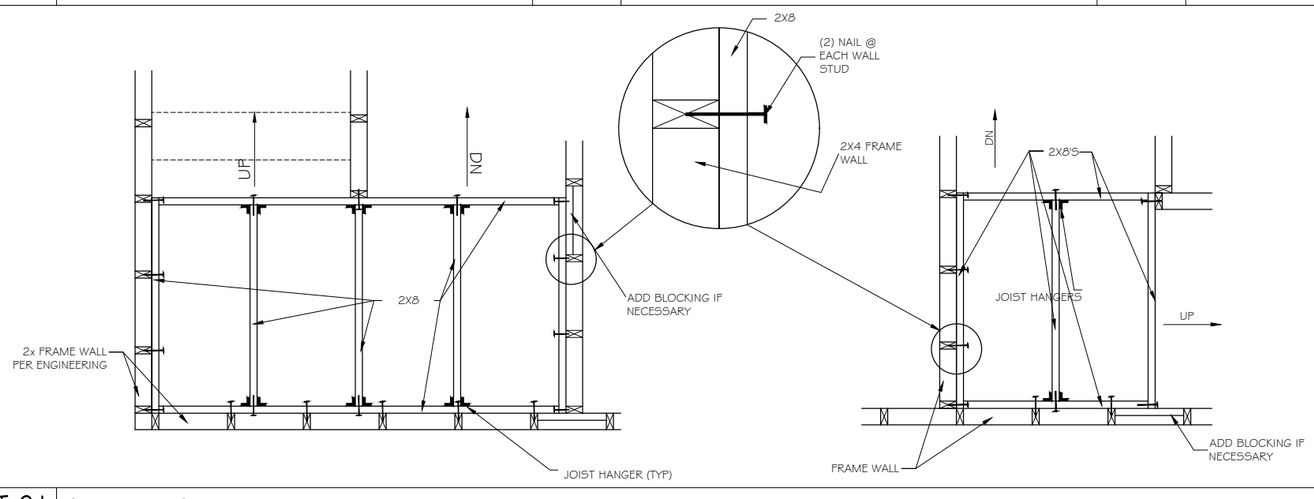

ST-21 STAIR LANDING - PLAN VIEW

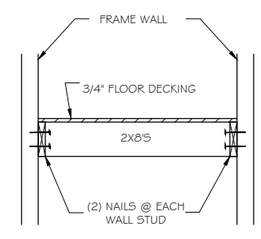

STAIR LANDING - SECTION VIEW

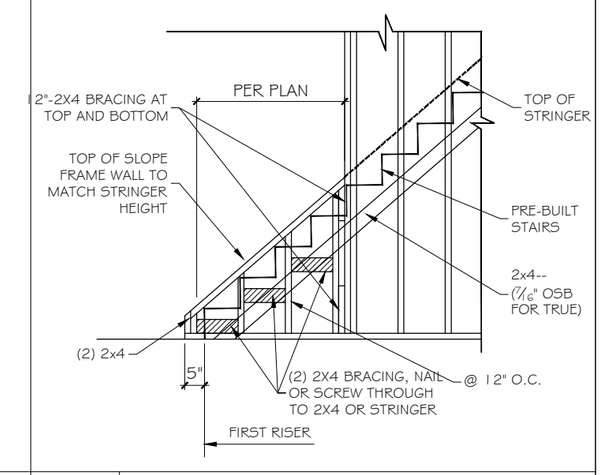

ST-20 OPEN RAIL - CURB WALL FRAMING

TrueHomes
IT'S ALL ABOUT U
2649 Brekonridge Centre Dr.
Suite 104
Monroe, N.C. 28110
704-271-1191

BUIES CREEK TOWNHOMES

DETAILS

LUCAS TH
1340

HARNETT COUNTY

Copyright True Homes L.L.C. All rights reserved. The duplication, reproduction, copying, sale, rental, licensing, or any other distribution or use of these drawings, any portion there of, or the plans depicted hereon is strictly prohibited.

PREPARED BY: Michael
DATE: 1.3.24
SCALE: AS SHOWN
REVIEWED BY: Chuck

SHEET: D5.2

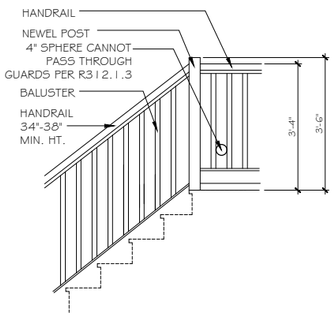

ST-23 OPT. OPEN RAIL AT LANDING

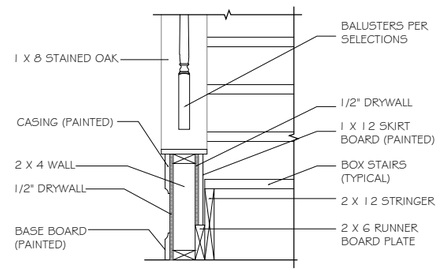

ST-24 SECTION @ CURB WALL

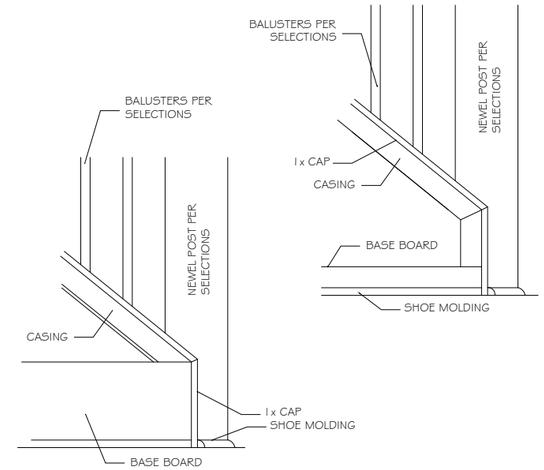

ST-25 OUTSIDE TRIM @ STAIR CURB WALL

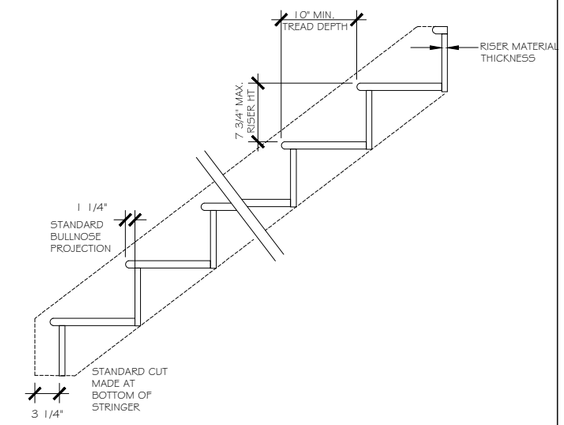

STAIR SECTION

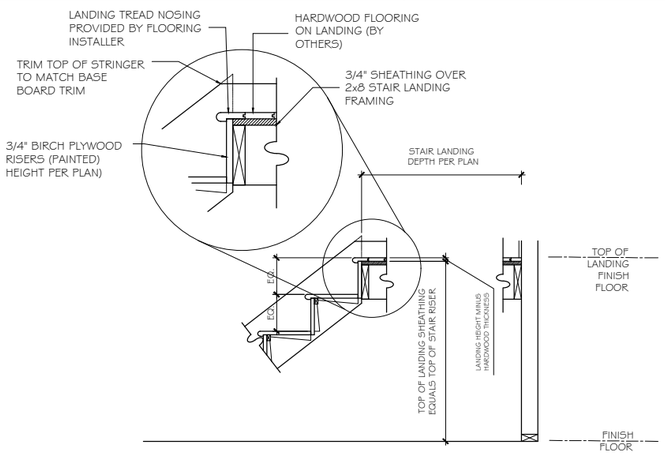

ST-26 STAIR SECTION - HARDWOOD STAIRS AND LANDING

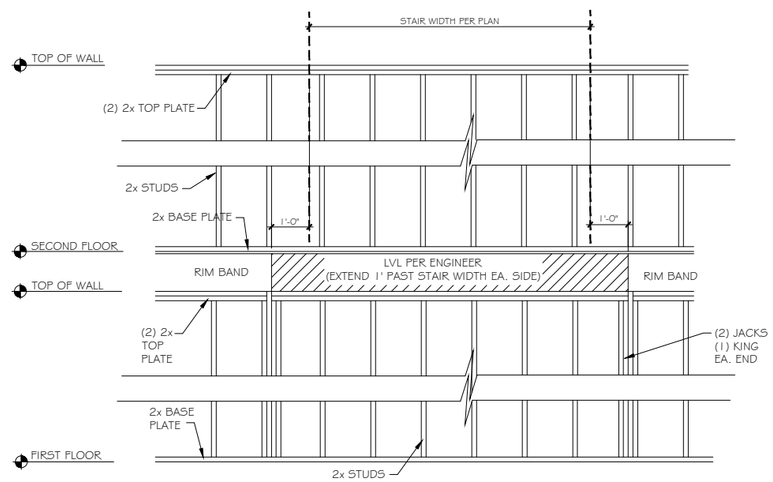

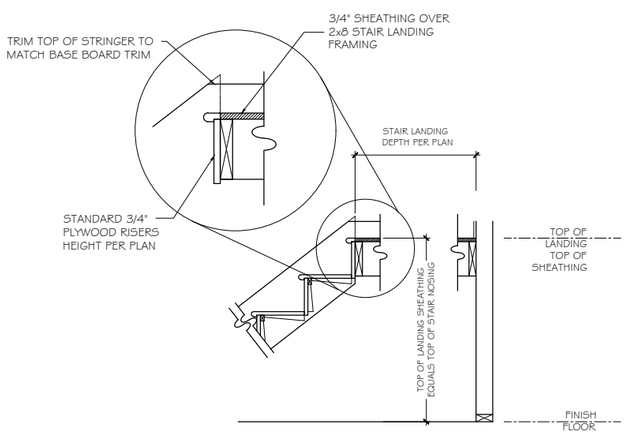

ST-27 STAIR SECTION - CARPET STAIRS AND LANDING

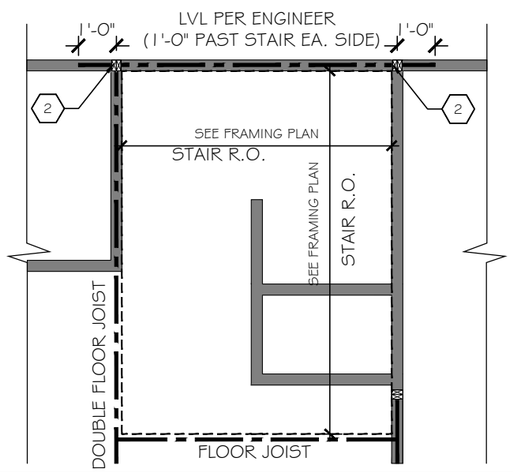

ST-28 EXTERIOR WALL FRAMING @ U-SHAPED STAIRS ilo BALLOON FRAMING

TrueHomes
IT'S ALL ABOUT U
2649 Brekonridge Centre Dr.
Suite 104
Monroe, N.C. 28110
704-271-1191

BUIES CREEK TOWNHOMES

DETAILS

LUCAS TH
1340

HARNETT COUNTY

Copyright True Homes L.L.C. All rights reserved. The duplication, reproduction, copying, sale, rental, licensing, or any other distribution or use of these drawings, any portion there of, or the plans depicted hereon is strictly prohibited.

PREPARED BY: Michael

DATE: 1.3.24

SCALE: AS SHOWN

REVIEWED BY: Chuck

SHEET: D5.3

GENERAL NOTES
*SEAL ALL TYVEK® JOINTS AND PENETRATIONS WITH APPROVED TAPE. (ex. DUPONT CONTRACTOR TAPE)
*FASTEN TYVEK® TO SHEATHING WITH LARGE HEAD NAILS OR USE NAILS WITH LARGE PLASTIC WASHER HEADS. (ex. DUPONT WRAPCAPS)
*SEAL OR GASKET BRICK TIES AT FACE OF TYVEK®
*LOCAL LAWS, ZONING, AND BUILDING CODES VARY AND THEREFORE GOVERNS OVER MATERIAL SELECTION AND DETAILING SHOWN BELOW.

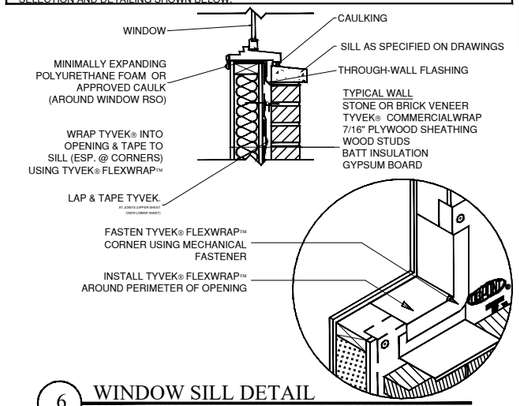

6 WINDOW SILL DETAIL
RESIDENTIAL WOOD FRAME STRUCTURE w/ VENEER (COOLING CLIMATE)

GENERAL NOTES
*SEAL ALL TYVEK® JOINTS AND PENETRATIONS WITH APPROVED TAPE.
(ex. DUPONT CONTRACTOR TAPE).
*FASTEN TYVEK® TO SHEATHING WITH LARGE HEAD NAILS
OR USE NAILS WITH LARGE PLASTIC WASHER HEADS.(ex. DUPONT WRAPCAPS)
*LOCAL LAWS, ZONING, AND BUILDING CODES VARY AND
THEREFORE GOVERNS OVER MATERIAL SELECTION AND DETAILING SHOWN BELOW.

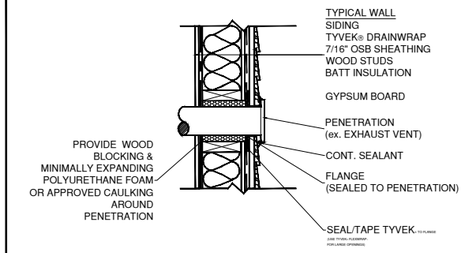

3 WALL PENETRATION DETAIL
RESIDENTIAL WOOD FRAME STRUCTURE w/ WOOD SIDING

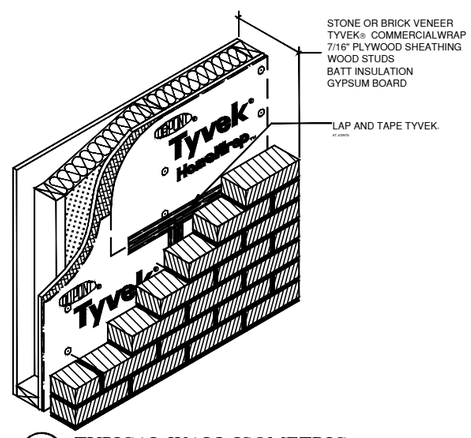

8 TYPICAL WALL ISOMETRIC
RESIDENTIAL WOOD FRAME STRUCTURE w/ MASONRY VENEER (COOLING CLIMATE)

GENERAL NOTES
*SEAL ALL TYVEK® JOINTS AND PENETRATIONS WITH APPROVED TAPE. (ex. DUPONT CONTRACTOR TAPE)
*FASTEN TYVEK® TO SHEATHING WITH LARGE HEAD NAILS OR USE NAILS WITH LARGE PLASTIC WASHER HEADS. (ex. DUPONT WRAPCAPS)
*SEAL OR GASKET BRICK TIES AT FACE OF TYVEK®
*LOCAL LAWS, ZONING, AND BUILDING CODES VARY AND THEREFORE GOVERNS OVER MATERIAL SELECTION AND DETAILING SHOWN BELOW.

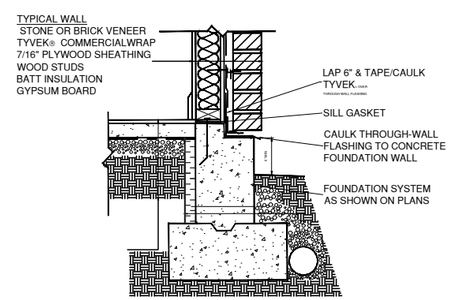

5 BASE OF WALL DETAIL
RESIDENTIAL WOOD FRAME STRUCTURE w/ VENEER (COOLING CLIMATE)

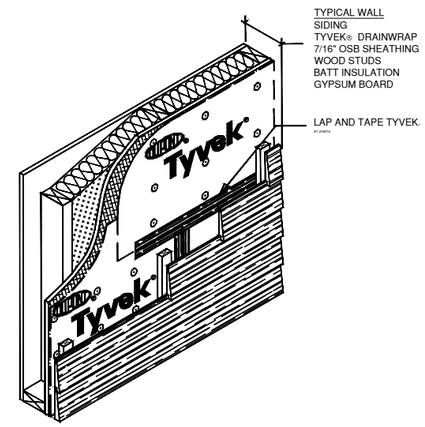

2 TYPICAL WALL ISOMETRIC
RESIDENTIAL WOOD FRAME STRUCTURE w/ WOOD SIDING (COOLING CLIMATE)

GENERAL NOTES
*SEAL ALL TYVEK® JOINTS AND PENETRATIONS WITH APPROVED TAPE. (ex. DUPONT CONTRACTOR TAPE)
*FASTEN TYVEK® TO SHEATHING WITH LARGE HEAD NAILS OR USE NAILS WITH LARGE PLASTIC WASHER HEADS. (ex. DUPONT WRAPCAPS)
*SEAL OR GASKET BRICK TIES AT FACE OF TYVEK®
*LOCAL LAWS, ZONING, AND BUILDING CODES VARY AND THEREFORE GOVERNS OVER MATERIAL SELECTION AND DETAILING SHOWN BELOW.

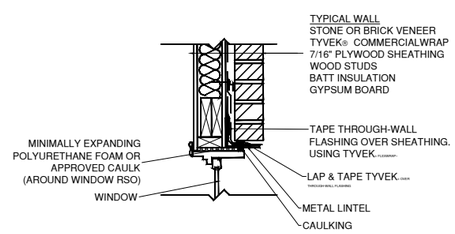

7 WINDOW HEAD DETAIL
RESIDENTIAL WOOD FRAME STRUCTURE w/ VENEER (COOLING CLIMATE)

GENERAL NOTES
*SEAL ALL TYVEK® JOINTS AND PENETRATIONS WITH APPROVED TAPE.
(ex. DUPONT CONTRACTOR TAPE).
*FASTEN TYVEK® TO SHEATHING WITH LARGE HEAD NAILS
OR USE NAILS WITH LARGE PLASTIC WASHER HEADS.(ex. DUPONT WRAPCAPS)
*LOCAL LAWS, ZONING, AND BUILDING CODES VARY AND
THEREFORE GOVERNS OVER MATERIAL SELECTION AND DETAILING SHOWN BELOW.

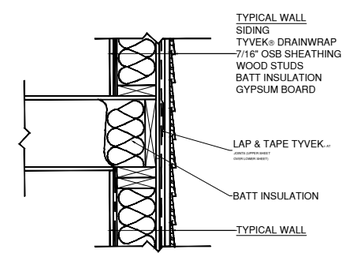

4 FLOOR/ WALL INTERFACE DETAIL
RESIDENTIAL WOOD FRAME STRUCTURE w/ SIDING (HEATING CLIMATE)

GENERAL NOTES
*SEAL ALL TYVEK® JOINTS AND PENETRATIONS WITH APPROVED TAPE.
(ex. DUPONT CONTRACTOR TAPE).
*FASTEN TYVEK® TO SHEATHING WITH LARGE HEAD NAILS
OR USE NAILS WITH LARGE PLASTIC WASHER HEADS. (ex. DUPONT WRAPCAPS)
*LOCAL LAWS, ZONING, AND BUILDING CODES VARY AND
THEREFORE GOVERNS OVER MATERIAL SELECTION AND DETAILING SHOWN BELOW.

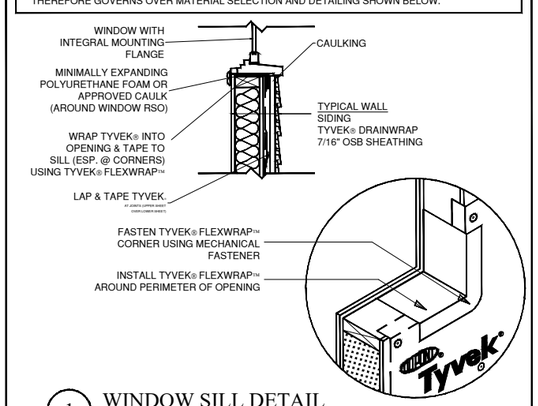

1 WINDOW SILL DETAIL
RESIDENTIAL WOOD FRAME STRUCTURE w/ WOOD SIDING (COOLING CLIMATE)

TrueHomes
IT'S ALL ABOUT U
2649 Brekonridge Centre Dr.
Suite 104
Monroe, N.C. 28110
704-271-1191

BUIES CREEK TOWNHOMES

DETAILS

LUCAS TH
1340

HARNETT COUNTY

Copyright True Homes L.L.C.. All rights reserved. The duplication, reproduction, copying, sale, rental, licensing, or any other distribution or use of these drawings, any portion there of, or the plans depicted hereon is strictly prohibited.

PREPARED BY: Michael
DATE: 1.3.24
SCALE: AS SHOWN
REVIEWED BY: Chuck

SHEET: D6

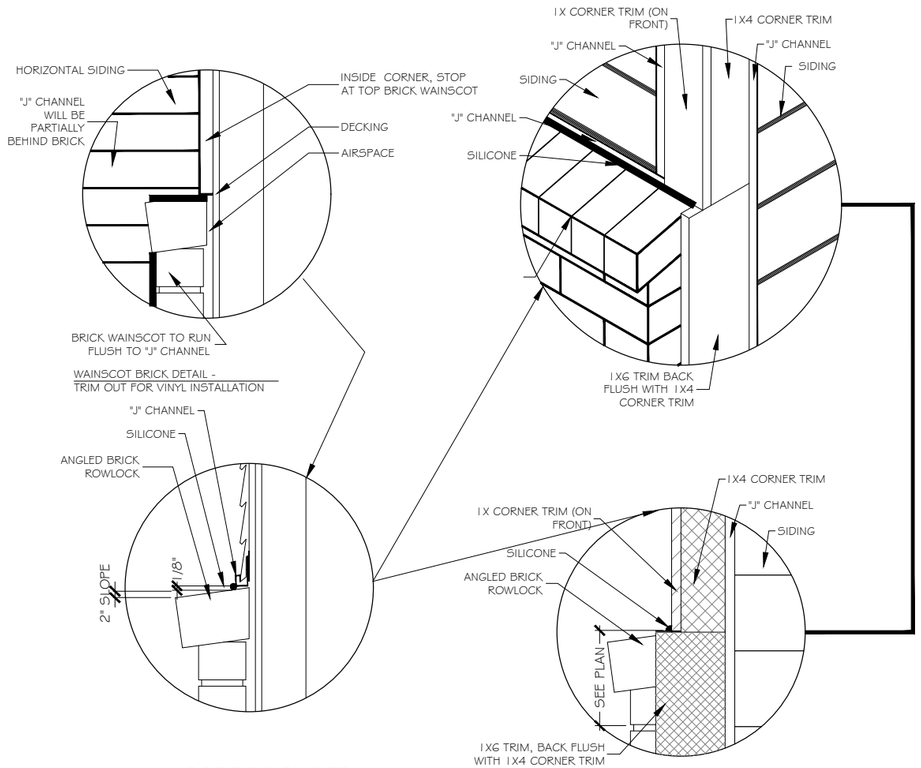

WAINSCOT BRICK DETAIL @ 1X WOOD CORNER CONDITION

A FLASHING @ WAINSCOTING BRICK DETAIL

SCALE: 1/4" = 1'-0"

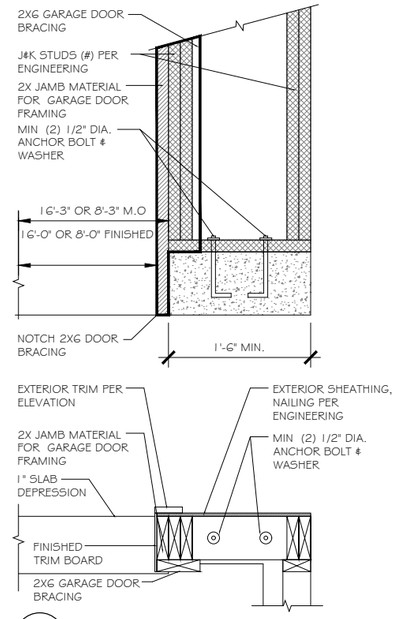

C GARAGE LUG DETAIL - GREATER THAN 1'-6"

SCALE: NOT TO SCALE

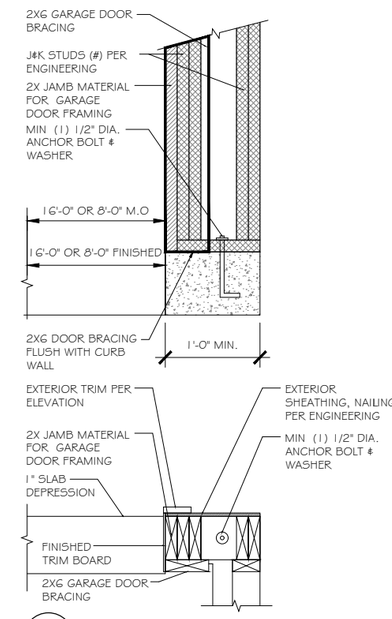

D GARAGE LUG DETAIL - LESS THAN 1'-6"

SCALE: NOT TO SCALE

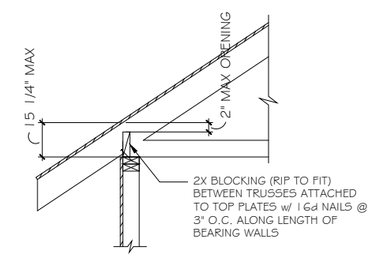

HEEL HEIGHT GREATER THAN 9 1/4" AND LESS THAN 15 1/4" :

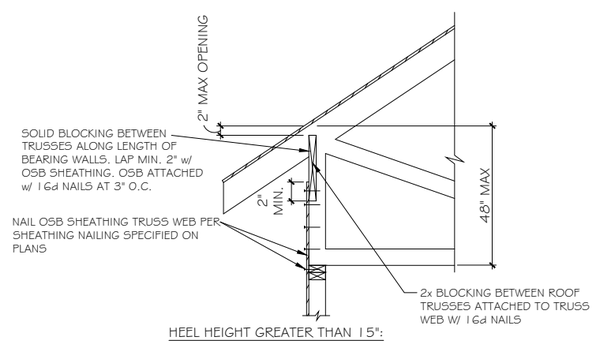

HEEL HEIGHT GREATER THAN 15":

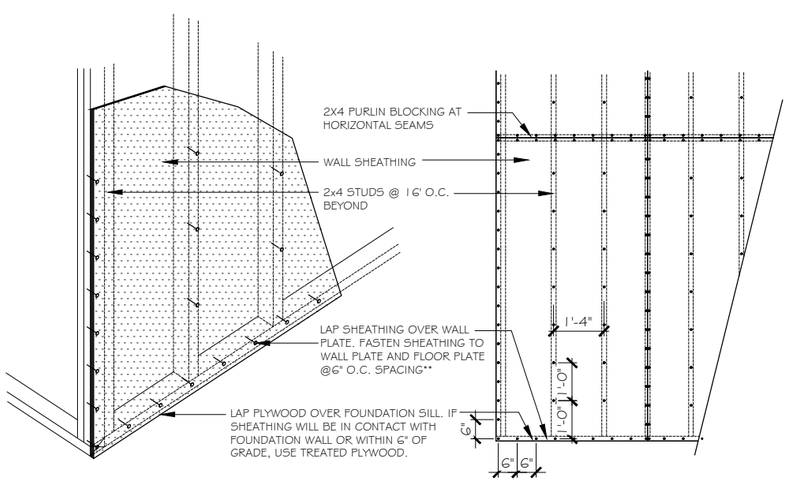

B TYP. NAILING PATTERN

SCALE: 1/4" = 1'-0"

E TRUSS BLOCKING REQUIREMENTS

N.T.S.

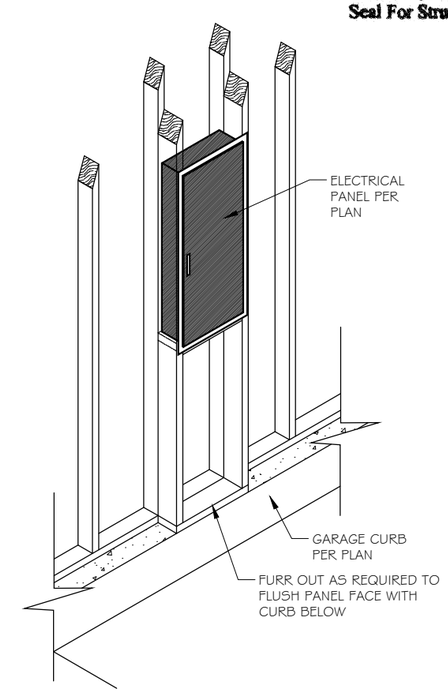

F ELECTRICAL PANEL REQUIREMENTS

N.T.S.

NORTH CAROLINA PROFESSIONAL SEAL 29249 1/4/23 ENGINEER KEVIN P. MUNSON

NORTH CAROLINA RESIDENTIAL STRUCTURES, P.C. No. C3295 CERTIFICATE OF AUTHORIZATION

RESIDENTIAL STRUCTURES, P.C.
3410 N. Davidson St.
Charlotte, N.C. 28205
Seal For Structural Only

TrueHomes
IT'S ALL ABOUT U
2649 Brekonridge Centre Dr.
Suite 104
Monroe, N.C. 28110
704-271-1191

BUIES CREEK TOWNHOMES

DETAILS

LUCAS TH
1340

HARNETT COUNTY

Copyright True Homes L.L.C.. All rights reserved. The duplication, reproduction, copying, sale, rental, licensing, or any other distribution or use of these drawings, any portion there of, or the plans depicted hereon is strictly prohibited.

PREPARED BY: Michael

DATE: 1.3.24

SCALE: AS SHOWN

REVIEWED BY: Chuck

SHEET: D7

GENERAL NOTES

RESIDENTIAL FOUNDATIONS:

1) ALL CONTINUOUS WALL FOOTINGS ARE 8" X 12" FOR ONE-STORY AND 8"X16" FOR TWO-STORY HOUSES UNLESS OTHERWISE NOTED. REINFORCING IS TO BE AS NOTED ON PLANS. FOOTINGS ON ORIGINAL SOIL DO NOT NEED REBAR. REBAR IS REQUIRED ON ANY COMPACTED FILL REGARDLESS OF COMPACTION.
2) ALL INTERIOR PIERS ARE 8" X 16" CMU UP TO A MAXIMUM HEIGHT OF 32". ALL PIERS OVER 32" HIGH MUST BE FILLED WITH TYPE S MORTAR. MAXIMUM HEIGHT FOR 8" X 16" FILLED PIER IS 6'-8". PIERS LARGER THAN 8" X 16" ARE NOTED ON PLANS AND MUST BE FILLED WITH TYPE S MORTAR. FOR ONE-STORY STRUCTURES, PIER CAPS ARE TO BE 4" SOLID MASONRY. FOR TWO-STORY STRUCTURES, PIER CAPS ARE TO BE 8" OF SOLID MASONRY.
3) FOOTINGS FOR 8" X 16" PIERS ARE 24" X 36" X 10" UNLESS NOTED OTHERWISE. REINFORCING IS TO BE AS NOTED ON PLANS.
4) INTERIOR THICKENED SLAB FOOTINGS WHICH OCCUR IN BASEMENTS AND "SLAB ON GRADE" FLOORS ARE 10" DEEP BY 16" WIDE WITH 2-#4 REINFORCING BARS RUNNING CONTINUOUSLY UNLESS NOTED OTHERWISE. THICKENED FOOTINGS ARE REQUIRED UNDER ALL BEARING WALLS.
5) ALL REBAR SPLICES SHALL BE A MINIMUM OF 2'-0" UNLESS OTHERWISE NOTED.
6) SHALLOW FOUNDATIONS ARE DESIGNED FOR AN ASSUMED SOIL BEARING CAPACITY OF 2,000 PSF. THE CONTRACTOR IS RESPONSIBLE FOR NOTIFYING THE ENGINEER OF RECORD IF ANY SOILS ARE FOUND TO BE UNSUITABLE FOR THIS BEARING CAPACITY. THEE CONTRACTOR IS RESPONSIBLE FOR OBTAINING SOIL TESTING TO ENSURE THAT THE BEARING CAPACITY OF THE SOIL MEETS OR EXCEEDS THIS VALUE. ALL FILL IS TO BE COMPACTED TO 95% DENSITY AS MEASURED BY THE STANDARD PROCTOR TEST (ASTM D-698).
7) ALL SOILS AND FILL UNDER FLOORS AND/OR WITHIN OR UNDER BUILDINGS SHALL HAVE PRECONSTRUCTION SOIL TREATMENT FOR PROTECTION AGAINST TERMITES. CERTIFICATION OF COMPLIANCE SHALL BE ISSUED TO THE BUILDING DEPARTMENT BY A LICENSED PEST CONTROL COMPANY.
8) ALL FOOTING EXCAVATIONS SHALL BE NEAT, STRAIGHT, AND LEVEL IN THE PROPER ELEVATIONS TO RECEIVE THE CONCRETE. EXCESSIVE VARIATIONS IN THE DIMENSIONS OF FOOTINGS OR SLABS WILL NOT BE PERMITTED. REINFORCING STEEL AND MESH SHALL BE ACCURATELY PLACED AND SUPPORTED TO MAINTAIN THEIR POSITION DURING THE CONCRETE POURING. EDGE FORMS SHALL BE USED FOR CONCRETE THAT WILL BE EXPOSED.
9) ALL SLAB PENETRATIONS ARE TO BE THE RESPONSIBILITY OF THE CONTRACTOR. PENETRATIONS INTERFERING WITH REINFORCING SHALL BE APPROVED BY THE ENGINEER OF RECORD PRIOR TO THE PLACEMENT OF CONCRETE.
10) ELEVATIONS DIFFERENCES BETWEEN THE BOTTOM OF ADJACENT FOOTINGS SHALL BE LESS THAN THEIR HORIZONTAL DISTANCE LESS ONE FOOT. DIFFERENTIAL HEIGHTS BETWEEN FOOTINGS CAN BECOME EXCESSIVE USUALLY WHERE A PIER FOOTING IN A CRAWLSPACE OR GARAGE FOOTING IS NEXT TO A BASEMENT WALL FOOTING.

SPECIAL FOUNDATION CONSIDERATIONS:

1) CAISSON FOUNDATIONS SHALL BE A MINIMUM OF 12" DIAMETER DRILLED UNREINFORCED CONCRETE CAISSONS. CAISSONS SHALL EXTEND TO A MINIMUM DEPTH PROVIDING 2' PENETRATIONS INTO GOOD ORIGINAL GROUND. DEPTH OF DRILLING IS LIMITED TO 15'. THEREFORE, NO POOR MATERIAL MORE THAN 13' DEEP IS SUITABLE FOR A CAISSON FOUNDATION. A CAISSON CANNOT BE USED IF WATER RISES IMMEDIATELY INTO A DRILLED HOLE. PILES WILL HAVE TO BE USED IN SUCH CASES.
2) TREATED WOOD PILES WITH A MINIMUM DIAMETER OR 6" AND A MINIMUM DESIGN LOAD OF SIX TONS ARE USED FOR ALL FOUNDATIONS WITH UNSUITABLE SOIL DEEPER THAN 13' OR WITH WATER IN DRILLED CAISSON HOLES. DRIVE PER NORTH CAROLINA OR SOUTH CAROLINA CODE.
3) SIZES AND REINFORCING FOR FOOTING CAPS OVER CAISSONS OR PILES SHALL BE AS SHOWN ON PLANS.
4) CHIMNEY FOOTINGS ARE TO BE 12" LARGER THAN THE CHIMNEY FOOTPRINT BY 12" THICK.
5) FOUNDATION WALLS BACKFILLED WITH DIRT WHICH SUPPORT STRUCTURAL FRAMING SHALL BE CONSTRUCTED AS FOLLOWS:

A) FOR EARTH FILL UP TO A MAXIMUM HEIGHT OF 4': USE 8" CMU OR 8" BRICK WITH BITUTHENE MEMBRANE WATERPROOFING ON EXTERIOR. FOOTINGS ARE TO BE 8" X 16" OR 8" X 24" AS NOTED ON THE PLAN.

B) FOR EARTH FILL 4' TO A MAXIMUM HEIGHT OF 9': USE 8" X 24" FOOTING WITH #4 AT 16" DOWELS HOOKED IN FOOTING AND PROJECTING 18" ABOVE FOOTINGS. USE 12" CMU WALLS WITH #4 AT 16" VERTICAL BARS LOCATED 4" FROM NON-DIRT FILL FACE, LAP ALL SPLICES 12" AND USE DUR-O-WALL HORIZONTAL REINFORCING EVERY 8" IN CMU JOINTS. INSTALL 1-#3 L-BAR WITH 24" LEGS IN EVERY OTHER JOINT HORIZONTALLY AT ALL CORNERS; I.E., #3 CORNER BARS AT 16" O.C. VERTICALLY. FILL ALL OPEN CELLS OF CMU WITH EITHER TYPE S OR M MORTAR OR FILL WITH 2,500 PSI CONCRETE. INSTALL WATERPROOF BITUTHENE MEMBRANE OR EQUAL.

C) IN LIEU OF THE PRECEDING DESIGN, BASEMENT WALLS MAY BE CONSTRUCTED IN ACCORDANCE WITH R404.1 OF THE CODE. HOWEVER, 24" X 24", #3 CORNER BARS SHALL BE INSTALLED AT 16" O/C VERTICALLY REGARDLESS OF THE WALL HEIGHT. ERECT ALL FRAMING BEFORE BACKFILLING.

7) FOR RETAINING WALLS WITHOUT FRAMING SEE SPECIAL DESIGNS ON DRAWINGS.

FRAMING CONSTRUCTION - OTHER THAN ROOF:

1) SEE TABLE R602.3(1) OF THE CODE FOR A FASTENER SCHEDULE FOR STRUCTURAL MEMBERS.
2) WOOD BEAMS SHALL BE SUPPORTED BY METAL HANGERS OF ADEQUATE CAPACITY WHERE FRAMING INTO BEAMS OR LEDGERS. THE ALLOWABLE LOAD CAPACITY OF THE HANGER SHALL BE EQUAL TO OR GREATER THAN THE LOAD SPECIFIED ON THE PLAN. WHERE NO LOAD IS SPECIFIED, THE "LIGHTEST" AVAILABLE HANGER FOR THE APPLICATION IS ACCEPTABLE.
3) CRAWL GIRDERS AND BAND WITH 4" CURTAIN WALL AND PIER CONSTRUCTION SHALL BE 2-2 X 10 SOUTHERN YELLOW PINE #2 UNLESS NOTED OTHERWISE. MAXIMUM CLEAR SPANS ARE TO BE 4'-8" (6'-0" O/C SPACING OF PIERS).
TO AVOID OBJECTIONABLE CRACKING IN FINISHED HARDWOOD FLOORS OVER ANY GIRDERS, USE THE FOLLOWING PROCEDURE:
A) NAILING
i) ALL FLOOR JOISTS MUST BE TOENAILED TO THEIR SUPPORT GIRDERS WITH A MINIMUM OF 3-8D NAILS AT EACH END. LARGER NAILS WILL SPLIT AND RENDER THE TOENAIL INEFFECTIVE. NO END NAILING THROUGH THE GIRDER OR BAND IS PERMITTED.
ii) IF DROPPED GIRDERS ARE USED, END LAP ALL JOISTS AND SIDE NAIL EACH WITH A MINIMUM OF 3-16D NAILS AT EACH END OF EACH JOIST. LEDGER STRIPS SHOULD BE SPACED 3" APART AND NAILED WITH 3-16D NAILS AT EACH JOIST END.
iii) NAIL MULTIPLE MEMBER BUILT-UP GIRDERS WITH TWO ROWS OF 16D NAILS STAGGERED AT 32" O/C, 2" DOWN FROM THE TOP AND 2" UP FROM THE BOTTOM WITH 3-16D NAILS AT EACH END OF EACH PIECE IN THE JOIST THROUGH THE MEMBERS MAKING UP THE MULTIPLE GIRDER.
iv) THIS NAILING PATTERN WILL ENSURE A TIGHT FLOOR FROM THE OUTSIDE OF THE HOUSE TO THE OUTSIDE SO THAT WHEN THE FRAMING SHRINKS DURING THE FIRST HEATING SEASON, THE SHRINKAGE WILL BE UNIFORMLY DISTRIBUTED OVER THE ENTIRE FLOOR. IF THE GIRDER NAILING PATTERN IS OMITTED, THEN THE SHRINKAGE WILL ACCUMULATE OVER THE GIRDERS AND AN OBJECTIONABLE CRACK WILL DEVELOP IN THE FINISHED HARDWOOD FLOOR OVER THE GIRDER LINE.
B) AT ALL GIRDERS WHERE THE JOISTS CHANGE DIRECTION, INSTALL BRIDGING AT 6' O/C FOR A MINIMUM OF SIX JOIST SPACINGS BEYOND ANY JOIST DIRECTION CHANGE. THIS WILL INSURE SHRINKAGE DISTRIBUTION OVER THE FLOOR AND NOT LET IT ACCUMULATE AT THE GIRDER.
C) THERE MUST BE WOOD BLOCKING THRU BOLTED TO THE STEEL BEAM WITH JOISTS TOENAILED OR ATTACHED TO THE BEAM WITH METAL HANGERS UNDER ANY HARDWOOD FLOORS THAT PASS OVER A STEEL BEAM SUPPORTING FLOOR JOISTS. THIS CONDITION OFTEN EXISTS OVER BASEMENT AREAS.
4) ALL OTHER LUMBER MAY BE SPRUCE #2 UNLESS NOTED OTHERWISE.
5) "LAM" BEAMS MUST HAVE 3-2X4 STUD JACKS UNDER EACH END SUPPORT UNLESS NOTED OTHERWISE.
6) MASONRY LINTELS:
A) FOR SPANS UP TO 6': USE 3 ½" X 3 ½" X ¼" STEEL ANGLES.
B) FOR SPANS FROM 6' TO 10': USE 5" X 3 ½" X 5/16" STEEL ANGLES.
C) FOR SPANS FROM 9' TO 18': USE A PAIR OF 9-GAUGE WIRES IN EACH OF THE FIRST 3 COURSES OF BRICK ON A 5" X 3 ½" X 5/16" STEEL ANGLE. LAP ALL 9-GAUGE WIRE SPLICES A MINIMUM OF 12" AND EXTEND WIRES A MINIMUM OF 12" INTO JAMBS. TEMPORARILY SUPPORT THE STEEL ANGLES BEFORE LAYING MASONRY. THE SHORING MAY BE REMOVED FIVE DAYS FOLLOWING THE INSTALLATION OF MASONRY.
D) WHEN STRUCTURAL STEEL BEAMS WITH BOTTOM PLATES ARE USED TO SUPPORT MASONRY, THE BOTTOM PLATE MUST EXTEND THE FULL LENGTH OF THE STEEL BEAM. THIS PROVIDES SUPPORT TO THE ENDS OF THE PLATE BY BEARING ON THE ADJACENT MASONRY JAMBS. THE BEAM SHOULD BE TEMPORARILY SHORED PRIOR TO LAYING THE MASONRY. THE SHORING MAY BE REMOVED FIVE DAYS AFTER LAYING THE MASONRY.
8) ALL BRICK VENEER OVER LOWER ROOFS (BRICK CLIMBS) MUST HAVE A STRUCTURAL ANGLE LAG SCREWED TO AN ADJACENT STUD WALL IN ACCORDANCE WITH DETAIL, WITH STEEL BRICK STOPS TO PREVENT SLIDING OF BRICK.
9) ALL RAFTER BRACES MUST HAVE TWO STUDS FROM PLATE THROUGH ALL FLOORS TO THE FOUNDATION OR SUPPORTING BEAM BELOW. NO BRACES SHALL BE ATTACHED TO TOP WALL PLATE WITHOUT STUDS DIRECTLY UNDER THEM.

METERIALS SPECIFICATIONS:

CONCRETE GENERAL NOTES:

1) EXCEPT WHERE OTHERWISE NOTED, FOR ALL CONCRETE, THE PROPORTIONS OF CEMENT, AGGREGATE, AND WATER TO ATTAIN REQUIRED PLASTICITY AND COMPRESSIVE STRENGTH SHALL BE IN ACCORDANCE WITH ACI 318 CODE. CONCRETE SHALL BE 2,500 PSI IN 28 DAYS FOR FOOTINGS AND 2,500 PSI FOR WALLS, BEAMS, AND COLUMNS, UNLESS NOTED OTHERWISE.
2) BEFORE PLACING CONCRETE, ALL DEBRIS, WATER AND OTHER DELETERIOUS MATERIAL SHALL BE REMOVED FROM THE PLACES TO BE OCCUPIED BY THE CONCRETE. THE PLACING OF ALL CONCRETE SHALL BE IN ACCORDANCE WITH ACI 318 AND ASTM C94 REQUIREMENTS. PUMPING OF CONCRETE WILL BE PERMITTED ONLY WITH THE ENGINEER OF RECORD'S APPROVAL OF PROPOSED CONCRETE MIX AND METHOD OF PUMPING. CONCRETE SHALL BE RAPIDLY HANDLED FROM THE MIXER TO FORMS AND DEPOSITED AS NEARLY AS POSSIBLE TO ITS FINAL POSITION TO AVOID SEGREGATION DUE TO REHANDLING. CONCRETE TO BE SPADED AND WORKED BY HAND AND VIBRATED TO ASSURE CLOSE CONTACT WITH ALL SURFACES OF FORMS AND REINFORCING STEEL AND LEVELED OFF AT PROPER GRADE TO RECEIVE FINISH. ALL CONCRETE SHALL BE PLACED UPON CLEAN, DAMP SURFACES. VIBRATION SHALL BE APPLIED DIRECTLY TO THE CONCRETE AND SHALL BE SUFFICIENT TO CAUSE FLOW OF SETTLEMENT BUT NOT LONG ENOUGH TO CAUSE SEGREGATION OF THE MIX.
3) CONSTRUCTION JOINTS SHALL BE LOCATED IN ACCORDANCE WITH ACI 301. ALL REINFORCING STEEL SHALL BE CONTINUOUS ACROSS JOINTS. IN SLABS ON GRADE, SAW CONTRACTION JOINTS SHALL NOT BE OVER 20 FEET CENTER TO CENTER EACH WAY. JOINTS SHALL BE SAWN A DEPTH OF ONE-THIRD OF THE SLAB THICKNESS. SAWING OF THE JOINTS SHALL COMMENCE AS SOON AS THE CONCRETE HAS HARDENED SUFFICIENTLY TO PERMIT SAWING WITHOUT EXCESSIVE RAVELING. FILL THE SAW CUTS WITH APPROVED JOINT FILLER AFTER THE CONCRETE HAS CURED.
4) CONCRETE, WHEN DEPOSITED, SHALL HAVE A TEMPERATURE NOT BELOW 50°F AND NOT ABOVE 90°F. THE METHODS AND RECOMMENDED PRACTICES AS DESCRIBED IN ACI 306 SHALL BE FOLLOWED FOR COLD WEATHER CONCRETING AND ACI 305 FOR HOT WEATHER CONCRETING.
5) FRESHLY PLACED CONCRETE SHALL BE PROTECTED FROM PREMATURE DRYING BY ONE OF THE FOLLOWING METHODS:

A) PONDING OR CONTINUOUS SPRINKLING.
B) ABSORPTIVE MAT OR FABRIC KEPT CONTINUOUSLY WET.
C) WATERPROOF PAPER CONFORMING TO ASTM C171
D) APPLICATION OF AN APPROVED CHEMICAL CURING COMPOUND.

THE CURING SHALL CONTINUE UNTIL THE CUMULATIVE NUMBER OR DAYS WHEN THE AMBIENT TEMPERATURE ABOVE 50°F HAS TOTALED SEVEN. DURING CURING, THE CONCRETE SHALL BE PROTECTED FROM ANY MECHANICAL INJURY, LOAD STRESSES, SHOCK, VIBRATION, OR DAMAGE TO FINISHED SURFACES.

6) REINFORCING STEEL BARS SHALL BE DEFORMED IN ACCORDANCE WITH ASTM A305 AND OR A408 AND FORMED OF ASTM A615-78 GRADE 60 STEEL. WELDED WIRE FABRIC REINFORCING TO BE ASTM A185 STEEL WIRE. ACCESSORIES SHALL CONFORM TO THE CRSI "MANUAL OF STANDARD PRACTICE." THE FOLLOWING MINIMUM CONCRETE COVER SHALL BE PROVIDED OVER REINFORCING BARS:

A) EXPOSED TO EARTH .... 3"
B) EXPOSED TO WEATHER .... 1 ½"
C) SLABS NOT EXPOSED TO WEATHER .... ¾"
D) BEAMS AND COLUMNS .... 1 ½"

MASONRY GENERAL NOTES:

1) MASONRY WALLS ARE TO BE OF THE SIZES AND IN THE LOCATIONS SHOWN ON THE PLANS AND SHALL BE CONSTRUCTED IN ACCORDANCE WITH THE PROVISIONS OF ACI 530.
2) HOLLOW LOAD BEARING UNITS: ASTM C90 MADE WITH LIGHTWEIGHT OR NORMAL WEIGHT AGGREGATES. GRADE N-I UNITS SHALL BE PROVIDED FOR EXTERIOR AND FOUNDATION WALLS. GRADE N-I OR S-I UNITS SHALL BE PROVIDED FOR OTHER LOAD-BEARING WALLS OR PARTITIONS.
3) CONCRETE BUILDING BRICK: ASTM C55 MADE WITH LIGHTWEIGHT OR NORMAL AGGREGATES, GRADE N-I OR S-I EXCEPT THAT BRICK EXPOSED TO WEATHER SHALL BE N-I.
4) MORTAR: ASTM C270-95, TYPE S PREPACKAGED MORTAR MIX WHICH SHALL NOT CONTAIN ANY NON-CEMENTITIOUS FILLERS COMBINED WITH NOT MORE THAN THREE PARTS SAND PER ON PART MIX.
5) REINFORCING STEEL: ASTM A615 GRADE 60 STEEL DEFORMED BARS WHERE INDICATED ON THE PLANS. WHERE REINFORCING BARS ARE INSTALLED IN THE CELLS OF CONCRETE MASONRY UNITS, THEY SHALL BE SECURED WITH WIRE TIES AT INTERVALS NOT EXCEEDING 24" O/C TO MAINTAIN THE BARS LOCATION IN THE CELL. THE TOLERANCE FOR SPACING OF VERTICAL BARS IS ± 2 INCHES ALONG THE LENGTH OF THE WALL. THE TOLERANCE FOR THE DISTANCE BETWEEN THE FACE OF THE CONCRETE MASONRY UNIT AND THE CENTER OF THE BAR SHALL NOT EXCEED ± ½".
6) MORTAR PROTRUSION SHALL BE LESS THAN ½". A PROTRUSION OF ½" OR GREATER MUST BE REMOVED BEFORE GROUTING.
7) HORIZONTAL JOINT REINFORCEMENT: ASTM A82 FABRICATED FROM COLD DRAWN STEEL WIRE AND HOT DIP ZINC COATED (ASTM A153). IT SHALL CONSIST OF TWO OR MORE PARALLEL, LONGITUDINAL WIRES 0.1875" IN DIAMETER WITH WELD-CONNECTED CROSS WIRES 0.1483" IN DIAMETER AT A MINIMUM OF 16" O/C. JOINT REINFORCEMENT IS TO BE INSTALLED IN EVERY OTHER COURSE AND IN THE FIRST TWO COURSES AT THE BOTTOM AND TOP OF WALL OPENINGS AND SHALL EXTEND NOT LESS THAN 24" PAST THE OPENING. SPLICES SHALL OVERLAP NOT LESS THAN 12".
8) EXECUTION: MASONRY UNITS SHALL BE LAID IN A RUNNING BAND PATTERN UNLESS NOTED OTHERWISE. THE WALLS SHALL BE CARRIED UP LEVEL AND PLUMB WITHIN THE TOLERANCES SPECIFIED IN ACI 530.1-88, SECTION 2.3.3.2. IF NONSTANDARD DIMENSIONS ARE ENCOUNTERED, BLOCK SHALL BE CUT WITH A MASONRY SAW TO FIT, NOT BY STRETCHING OR SHRINKING JOINTS. UNFINISHED WORK SHALL BE STEPPED BACK FOR JOINING WITH NEW WORK. TOOTHING WILL NOT BE PERMITTED EXCEPT WHERE SPECIFICALLY APPROVED. DAMAGED UNITS ARE TO BE CUT OUT AND NEW UNITS SET IN PLACE.
9) THE FILLED CELLS AND BOND BEAM BLOCKS OF REINFORCED MASONRY WALLS ARE TO BE FILLED WITH ASTM C476-91, GROUT FOR MASONRY WITH MINIMUM COMPRESSIVE STRESS OF 2,000 PSI AND SLUMP RANGE OR 8" TO 11". THE OUTSIDE FACE OF THE BOTTOM BLOCK OF EACH CELL IS TO BE BROKEN OUT FOR INSPECTION OF REINFORCING AND CLEAN OUT OF MORTAR DROPPINGS IN CELL. THE GROUT IS TO BE PUMPED INTO THE CELL IN MAXIMUM FIVE FOOT LIFTS AND IMMEDIATELY VIBRATED TO MINIMIZE ANY VOIDING OF THE GROUT. RECONSOLIDATE EACH LIFT BY VIBRATING SEVERAL INCHES INTO THE PRECEDING LIFT BEFORE PLASTICITY IS LOST. RECONSOLIDATE THE TOP LIFT AND FILL WITH GROUT ANY SPACE LEFT BY SETTLEMENT SHRINKAGE.
10) WHERE PARTITIONS FALL BETWEEN FLOOR JOISTS OR TRUSSES, 2 X 4 LADDERS AT 16" O/C MUST BE PLACED PERPENDICULAR TO THE TRUSSES TO SUPPORT THE PLYWOOD DECKING. THE LADDERS SHALL BE SUPPORTED WITH SIMPSON "Z" CLIP OR SIMILAR DEVICE.
11) ALL WOOD I-JOISTS AND OPEN JOISTS MUST BE BRACED IN ACCORDANCE WITH THE MANUFACTURER'S DIRECTIONS PLUS DETAILS SHOWN ON PLANS. LOAD-BEARING PARTITIONS, JACKS, BEAMS AND COLUMN SUPPORTS MUST BE SOLID BLOCKED THROUGH FLOOR. TRUSSES AND PLYWOOD SHALL NOT CARRY CONCENTRATED POINT LOADS. I-JOIST MATERIAL SHOULD NOT BE USED AS BLOCKING UNDER CONCENTRATED POINT LOADS. ALL POINT LOADS MUST BE CARRIED TO FOUNDATIONS WITH ADEQUATE BLOCKING AND/OR BEAMS.
12) ALL STEEL COLUMNS WHERE STEEL COLUMNS BEAR ON CONCRETE OR MASONRY, UNLESS OTHERWISE NOTED, A 5/8" X 6 ½" X 6 ½" OR 5/8" X 3 ½" X 8" BASE PLATE SHALL BE USED TO SPREAD THE COLUMN LOAD ACROSS THE BEARING SURFACE. BASE PLATES SHALL BE BOLTED WITH AT LEAST TWO ½" DIAMETER ANCHOR BOLTS OR EXPANSION BOLTS TO CONCRETE OR MASONRY.
13) UNLESS NOTED OTHERWISE ON PLANS, ALL EXTERIOR FACING WALL STUDS TALLER THAN 10' SHALL BE CONSTRUCTED AS FOLLOWS:
A) WALLS 10' TO 12' HIGH: BALLOON FRAME 2 X 4 STUDS AT 12" O/C WITH ½" OSB SHEATHING AND 3 KING STUDS ON EACH SIDE OF EACH OPENING NAILED SECURELY TO THE HEADER.
B) WALLS 12' TO 20' HIGH: BALLOON FRAME 2 X 6 STUDS AT 16" O/C (½" OSB SHEATHING REQUIRED FOR WALL HEIGHTS > 17'). PROVIDE 2-1 ¾" X 5 ¼" LVL KING STUDS ON EACH SIDE OF OPENINGS 3' TO 6' WIDE AND 2-2 X 6 KING STUDS FOR OPENINGS LESS THAN 3' WIDE. FASTEN KING STUDS SECURELY TO ALL HEADERS WITH A MINIMUM OF 12-16D NAILS OR 4-3/8" DIAMETER LAG SCREWS EMBEDDED A MINIMUM OF 4" INTO THE HEADER.
C) GABLE END WALLS OR ROOMS WITH VAULTED CEILING JOISTS: BALLOON FRAME WALL AND PROVIDE TRIPLE KING STUD ON EACH SIDE OF OPENINGS, NAILED SECURELY TO THE HEADER.
D) TWO-STORY HIGH FOYER WALLS LESS THAN 9' WIDE: EXTEND 3 ½" X 9 ¼" PSL MEMBER WITH 3-2 X 4 FLAT PLATES ACROSS THE ENTIRE WALL. LOCATE THE BEAM NEAR MID-HEIGHT OF THE WALL AT OR NEAR FIRST FLOOR TOP PLATE.

NOTE:SEE SPECIAL DESIGN OR ENGINEER FOR WALLS TALLER THAN 20', WHEN OPENINGS IN HIGH WALLS EXCEED 6' IN WIDTH, OR IF THE WALL CANNOT BE CONSTRUCTED USING ANY OF THE METHODS MENTIONED.

14) CONTINUOUS 2 X 6 BRIDGING SHALL BE NAILED TO DIAGONAL OR VERTICAL WEB MEMBERS OF ALL OPEN-WEB FLOORS TRUSSES OVER 10' LONG. THEY SHALL BE INSTALLED NEAR MID-SPAN AS A LOAD DISTRIBUTION MEMBER. IF THE 2 X 6 BRIDGING IS NOT CONTINUOUS, LAB ENDS OF BRIDGING ONE TRUSS SPACE.
15) LOWER STUD WALLS FOR BUILDINGS OVER TWO STORIES, BUT NOT MORE THAN THREE STORIES"
A) INTERIOR WALLS
i) LOAD BEARING .... 2 X 4 @ 12" O/C
ii) NON LOAD BEARING .... 2 X 4 @ 12" O/C
B) EXTERIOR WALLS
i) USE 2 X 6 AT 16" O/C WITH ½" X 4' X 8' PLYWOOD SHEATHING AT ALL CORNERS AND EVERY 25'; OR USE 2 X 4 AT 12" O/C WITH ½" PLYWOOD SHEATHING SOLID ON WALLS.
16) HEADERS SHALL BE AS SHOWN UNLESS NOTED DIFFERENTLY ON PLANS:
A) INTERIOR AND EXTERIOR
i) SPANS UP TO 2'-6" .... 2-2 X 6'S
ii) SPANS 2'-6" TO 3'-6" .... 2-2 X 8'S
iii) SPANS 3'-6" TO 6'-6" .... 2-2 X 10'S
iv) SPANS 6'6" OR MORE .... SEE PLAN
B) HEADERS WIDER THAN 5' SHALL HAVE A MINIMUM OF THREE KING STUDS ON EACH SIDE UNLESS NOTED OTHERWISE.
17) WHEN CEILING JOISTS ARE PARALLEL TO AN EXTERIOR WALL, TIE THE RAFTERS NEAR THE TOP PLATE TO CEILING JOISTS WITH A 2 X 6 STRONGBACK A MINIMUM OF 6' LONG AT 4 FEET ON CENTER ACROSS THE TOP OF THE CEILING JOISTS. 2 X 4 RAFTER TIES SHALL BE FASTENED TO THE SIDE OF THE RAFTER AND THE STRONGBACK.
18) AT ALL EXTERIOR DIAGONAL WALL PANELS, EACH PANEL SHALL BE NAILED TO EACH ADJACENT PANEL WITH 5-16D NAILS OR TIED TOGETHER WITH METAL STRIPPING NAILED AT FOUR LOCATIONS BETWEEN FLOORS WITH A MINIMUM OF 2-16D NAILS INTO EACH PANEL AT EACH STRAP. THIS WILL AVOID VERTICAL CRACKING IN PANEL JOINTS DUE TO HORIZONTAL OSCILLATING PANELS.
19) AT ALL STAIRS, EVERY STUD AT EACH STRINGER MUST BE NAILED TO EACH STRINGER WITH A MINIMUM OF 2-16D NAILS. THIS WILL AVOID CRACKING BETWEEN WALLBOARD AND TOP OF BASE MOLDING DUE TO VERTICAL OSCILLATION OF STAIR STRINGERS.
20) ROOF TRUSSES THAT HAVE NON-BEARING PARTITIONS PASSING UNDER THEM SHOULD BE NAILED TO THE PARTITION PLATES TO AVOID CEILING-WALL CRACKING.
21) ROOF TRUSSES CLOSE TO SIDE WALLS FRAMING AND USED AS DEAD WOOD FOR SHEETROCK BOARDS SHOULD BE NAILED TO THE WALL FRAMING TO PREVENT CEILING-WALL CRACKING.
22) ALL STRUCTURAL FRAMING LUMBER EXPOSED DIRECTLY TO THE WEATHER OR BEARING DIRECTLY ON EXTERIOR MASONRY PIERS OR CONCRETE SHALL BE TREATED. ALL WOOD IN CONTACT WITH THE GROUND IS TO BE GROUND-CONTACT APPROVED. ALL WOOD EXPOSED DIRECTLY TO THE WEATHER SHALL BE PROTECTED TO PREVENT THE OCCURRENCE OF ROT.
23) UNLESS OTHERWISE DETAILED, ALL STICK-BUILT "FALSE CHIMNEYS" SHALL BE CONSTRUCTED WITH 2 X 4 STUDS AT 12" O/C, BALLOON-FRAMED FROM ATTIC CEILING OR FLOOR. FASTEN 15/32" CDX PLYWOOD ON ALL SIDES OF THE CHIMNEY ALONG THE FULL LENGTH OF THE STUDS. FASTEN EACH STUD TO THE SUPPORTING BEAM OR CEILING JOIST WITH A 1 ½" X 24", 18-GAUGE METAL STRAP, OR A SIMILAR CONNECTOR.
24) ITEM UNCHANGED, BUT MOVED FROM UNDER #14 ON OLD PAGE 2:

NOTE:ALL POINT LOADS FROM ROOF BRACES, JACK STUDS, BEAM SUPPORTS - WHETHER WOOD OR STEEL - CANNOT BEAR ON SHEATHING ALONE. BLOCKING EQUAL TO OR BETTER THAN THE POINT LOAD SUPPORTS ABOVE MUST BE CARRIED THROUGH ALL CONSTRUCTION TO THE FOUNDATION.

25) NOTE TO APPLY TO ALL HARD COAT STUCCO EXTERIOR FINISHES:
A) JOINTS ARE NECESSARY AT THE FOLLOWING LOCATIONS:
i) HORIZONTALLY AT EACH FLOOR LINE.
ii) NO AREAS LARGER THAN 144 S.F. SURFACE EXPOSED.
iii) NO DIMENSION LONGER THAN 18'.
iv) NO DIMENSION LONGER THAN 2 ½ TIMES THE SHORTEST DIMENSION.
B) DRIP SCREED REQUIRED AT THE BOTTOM OF ALL WALLS 2" ABOVE PAVED AREAS AND 4" ABOVE GRADE.
C) SEE ASTM 926 AND 1063 FOR FURTHER INFORMATION.
D) APPLICATION OF AN APPROVED CHEMICAL CURING COMPOUND.
THE CURING SHALL CONTINUE UNTIL THE CUMULATIVE NUMBER OR DAYS WHEN THE AMBIENT TEMPERATURE ABOVE 50°F HAS TOTALED SEVEN. DURING CURING, THE CONCRETE SHALL BE PROTECTED FROM ANY MECHANICAL INJURY, LOAD STRESSES, SHOCK, VIBRATION, OR DAMAGE TO FINISHED SURFACES.

WALL BRACING NOTES:

1. THIS STRUCTURE HAS BEEN ANALYZED BY A PROFESSIONAL ENGINEER FOR LATERAL LOADING. IT HAS BEEN DESIGNED USING CONTINUOUSLY SHEATHED 7/16" OSB SHEATHING, FASTENED AT 6" O.C. ALONG THE EDGES AND 12" O.C. ALONG THE INTERIOR TO MEET OR EXCEED THE INTENT OF THE 2015 INTERNATIONAL RESIDENTIAL BUILDING CODE. WHERE WALL LINES REQUIRE FURTHER REINFORCEMENT, ADDITIONAL BRACING METHODS, ENGINEERED WALL SECTIONS AND HOLD DOWNS HAVE BEEN INCLUDED TO RESIST THE LATERAL LOADS AND ARE NOTED ON THE PLAN SET.

ROOF CONSTRUCTION:

1) ALL ROOF TRUSSES MUST BE BUILT IN ACCORDANCE WITH TRUSS MANUFACTURERS' REQUIREMENTS. TIE-DOWN CONNECTIONS TO RESIST UPLIFT SHALL BE INSTALLED WHERE REQUIRED. WHEN ROOF TRUSS MANUFACTURERS DO NOT PROVIDE THE REQUIRED CONNECTORS, IT IS THE RESPONSIBILITY OF THE CONTRACTOR TO NOTIFY THE ROOF TRUSS ENGINEER OR THE ENGINEER OF RECORD TO PROVIDE AN ADEQUATE CONNECTOR.
2) IN ADDITION TO THE CODE'S FASTENER SCHEDULE, UNLESS NOTED OTHERWISE ON THE PLAN, ROOF MEMBERS SHALL BE TIED DOWN WITH ADDITIONAL METAL CONNECTORS AS FOLLOWS:
A) STICK-FRAMED RAFTER MEMBERS EXCEEDING 10' IN LENGTH, AS MEASURED FROM THEIR HORIZONTAL PROJECTION, AND ALL ROOFS OVER UNENCLOSED AREAS SUCH AS PORCHES USE SIMPSON H2.5 CONNECTORS EVERY 4' OR AT EVERY THIRD RAFTER TO FASTEN THE LOWER END OF THE RAFTER TO THE TOP PLATE.
B) ALL LOWER ENDS OF VALLEY AND HIP MEMBERS WHICH BEAR ON A TOP PLATE USE A SIMPSON HCP OR EQUIVALENT CONNECTOR.
3) RAFTERS SHALL BE 2 X 6 AT 16" O/C SPRUCE-PINE-FUR #2 FOR SHINGLES EXCEPT AS NOTED. THEY ARE TO BE CUT INTO HIPS, RIDGES, ETC., UNLESS NOTED OTHERWISE. TILE, SLATE AND OTHER HEAVY ROOF COVERINGS SHALL USE 2 X 8 AT 16" O/C SPRUCE-PINE-FUR #2 RAFTERS UNLESS NOTED OTHERWISE.
4) COLLAR TIES SHALL BE 2 X 6 AT 48" O/C AT ALL RIDGES UNLESS NOTED OTHERWISE AND LOCATED A NOMINAL 3' BELOW THE RIDGE. VAULTED CEILINGS REQUIRE SPECIAL COLLAR TIE OR RIDGE BEAM DETAILS. SEE THE END OF TABLE R802.5.1. IN THE CODE UNLESS OTHERWISE DETAILED ON THE PLAN.
5) A MINIMUM OF THREE COLLAR TIES SHALL BE USED AT ALL RIDGES EVEN IF TWO TIES MUST BE PUT ON ONE SET OF RAFTERS.
6) ALL HIPS AND RIDGES ARE A SIZE LARGER THAN RAFTERS UNLESS NOTED OTHERWISE.
7) ALL HOGS ON CEILING JOISTS OR RAFTERS ARE 12' LONG AND 2 X 6'S UNLESS NOTED OTHERWISE. RAFTERS MAY BE SPLICED OVER HOGS. SPLICE RAFTER HOGS ONLY AT A ROOF BRACE.
8) GABLE END MUST BE BRACED PARALLEL TO RIDGES AS REQUIRED PER TRUSS MANUFACTURER. GABLE END TRUSS BEARING SHALL FOLLOW THE TRUSS MANUFACTURE TYPICAL DETAILS AND BE LOCATED APPROXIMATELY MID-HEIGHT OF GABLE WALLS. BRACES SHALL BE AT AN ANGLE OF APPROXIMATELY 45°. OTHER BRACING MAY BE USED WITH THE DESIGN ENGINEER'S APPROVAL. FIELD FRAMED GABLE END WALLS SHALL BE CONTINUOUS STUDS FROM THE CEILING LEVEL TO THE ROOF AND SHALL FOLLOW THE EXTERIOR WALL STUD SCHEDULE.
9) CEILING JOISTS WHEN ERECTED PARALLEL TO RAFTERS MUST BE SISTERED TO RAFTERS AND NAILED WITH 3-16D NAILS AT EACH RAFTER. IF A KNEEWALL IS USED AND CEILING JOISTS CANNOT TOUCH RAFTERS, THEN RAFTERS MUST BE TIED TO THE CEILING JOISTS USING 2 X 4 OR 1 X 6 RAFTER TIES SPACED NO MORE THAN 4" ON CENTER.
D) ALL ROOF BRACES ARE 2-2 X 4 NAILED WITH 16 PENNY NAILS AT 9" O/C VERTICALLY FROM TOP TO BOTTOM. BRACES LONGER THAN 10' MUST BE BRACED HORIZONTALLY IN TWO DIRECTIONS AT MID-HEIGHT.
E) MAXIMUM SPACING OF ROOF BRACES IS TO BE AS FOLLOWS:
i) FOR 2 X 6 HOG .... 6'-0" O/C
ii) FOR 2 X 8 HOG .... 7'-6" O/C

LUMBER GENERAL NOTES:

1) ALL COMMON FRAMING LUMBER IS TO MEET THE FOLLOWING MINIMUM SPECIFICATIONS AT 19% MOISTURE CONTENT:

MATERIAL	FB (PSI)	FT (PSI)	FC (PSI)(PERP)	E (PSI)
# 2 SPRUCE PINE FUR	875	450	425	1,400,000
SOUTHERN YELLOW PINE	1,150	600	480	1,600,000

2) ALL STRUCTURAL COMPOSITE LUMBER (LVL, LSL, PSL) IS TO MEET THE FOLLOWING MINIMUM SPECIFICATIONS:

APPLICATION	FB (PSI)	FC (PSI)(PARALLEL)	FC (PSI)(PERP.)	E (PSI)
GIRDERS & BEAMS (LVL,PSL)	2,600	2,310	650	1,900,000
COLUMNS (LSL) & RIMBOARDS	1,700	1,400	400	1,300,000

3) ALL GLUE LAMINATED TIMBER (GLU-LAM) IS TO MEET THE FOLLOWING MINIMUM SPECIFICATIONS:

APPLICATION	FB (PSI)	FC (PSI)(PARALLEL)	FC (PSI)(PERP.)	E (PSI)
GIRDERS & BEAMS	2,400	1,700	740	1,700,000
COLUMNS	1,600	1,550	560	1,500,000

4) OPEN WEB FLOOR TRUSSES:

APPLICATION	FB	
TOP & BOTTOM CHORDS	2,500	1.9E MSR LUMBER
COLUMNS (LSL) & RIMBOARDS	950	1.4E LUMBER

5) WHERE THREE OR FOUR-PLY "LAM" BEAMS ARE SIDE-LOADED (JOISTS FRAME INTO THE SIDE AT THE OUTSIDE PLIES), FASTEN ALL PLIES TOGETHER WITH TWO ROWS OF ½" DIAMETER BOLTS AT 16" O/C. THE BOLTS SHALL BE LOCATED A MINIMUM OF 2 ½" AND A MAXIMUM OF 3 ½" FROM THE TOP OR BOTTOM OF THE BEAM.

6) BUILT-UP WOOD COLUMNS CONSISTING OF MULTIPLE STUDS SHALL HAVE EACH LAMINATION NAILED WITH 16D NAILS AT 9" O/C.

PLANS PERMITTED IN NORTH CAROLINA ARE DESIGNED TO MEET THE 2018 NORTH CAROLINA RESIDENTIAL BUILDING CODE, AS ISSUED BY THE STATE OF NORTH CAROLINA

NORTH CAROLINA PROFESSIONAL SEAL 29249 ENGINEER KEVIN P. MUNSON 1/4/23

NORTH CAROLINA RESIDENTIAL STRUCTURES, P.C. No. C3295 CERTIFICATE OF AUTHORIZATION

RESIDENTIAL STRUCTURES, P.C.
3410 N. Davidson St.
Charlotte, N.C. 28205
Seal For Structural Only

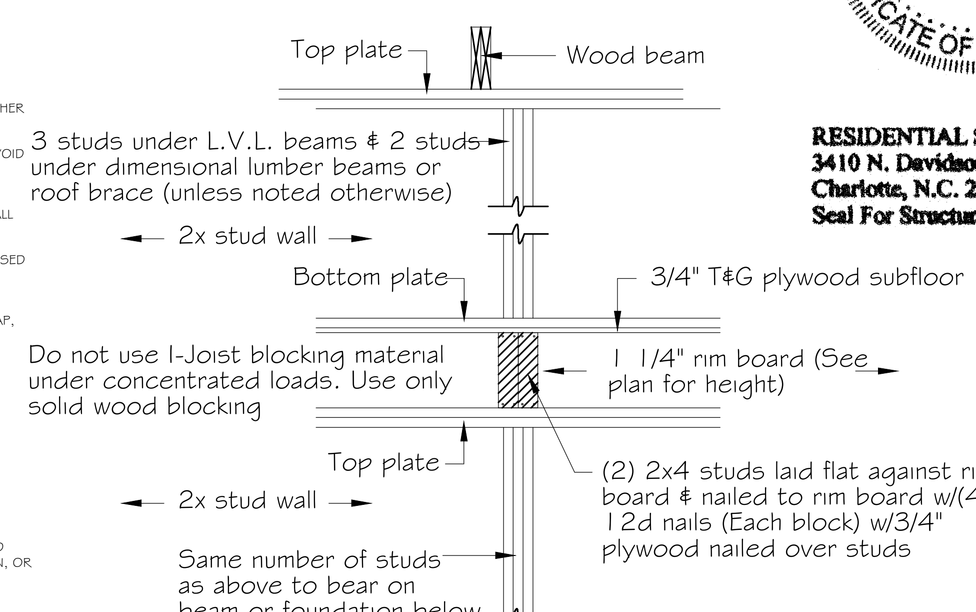

Number of studs / blocking transfer load detail at engineered floor system

TrueHomes
IT'S ALL ABOUT U
2649 Brekonridge Centre Dr.
Suite 104
Monroe, N.C. 28110
704-271-1191

BUIES CREEK TOWNHOMES

DETAILS

LUCAS TH 1340

HARNETT COUNTY

Copyright True Homes L.L.C.. All rights reserved. The duplication, reproduction, copying, sale, rental, licensing, or any other distribution or use of these drawings, any portion there of, or the plans depicted hereon is strictly prohibited.

PREPARED BY: Michael
DATE: 1.3.24
SCALE: AS SHOWN
REVIEWED BY: Chuck

SHEET: D8

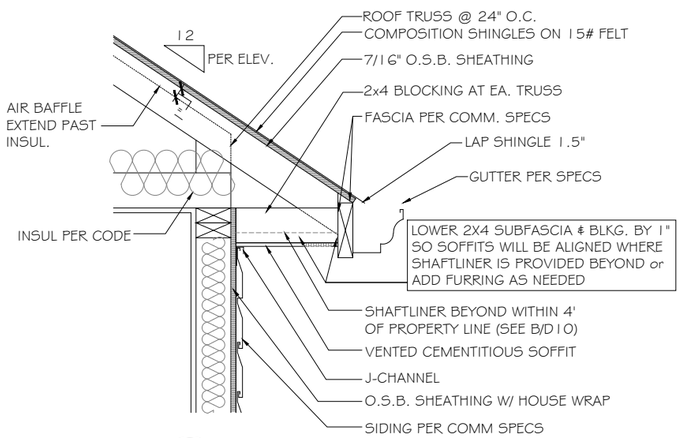

A CORNICE DETAIL
SCALE: NOT TO SCALE NON-RATED

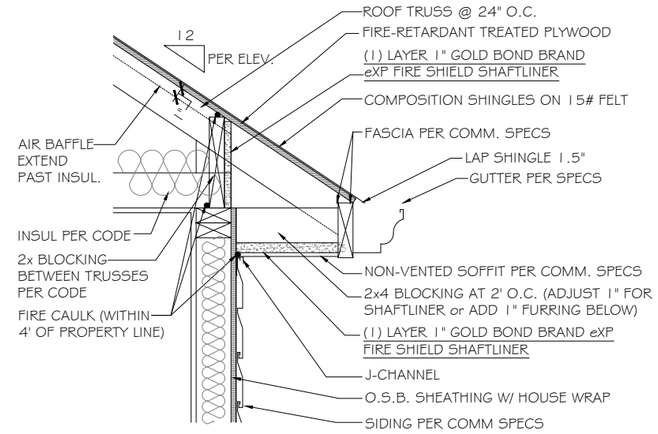

B CORNICE DETAIL
SCALE: NOT TO SCALE 1 HR. UNDERSIDE PROTECTION WITHIN 4' OF THE PROPERTY LINE

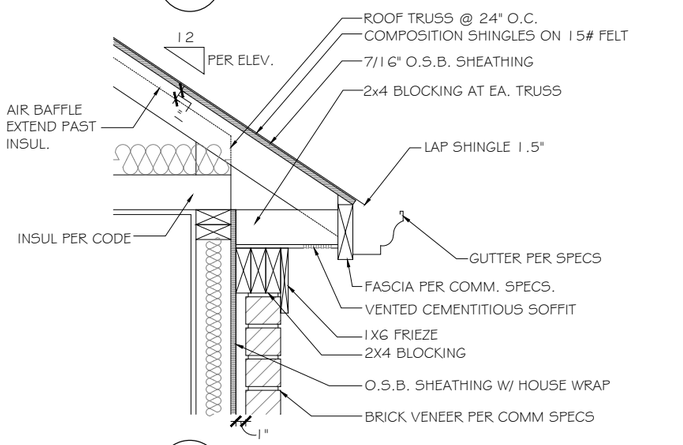

D BRICK CORNICE DETAIL
SCALE: NOT TO SCALE NON-RATED

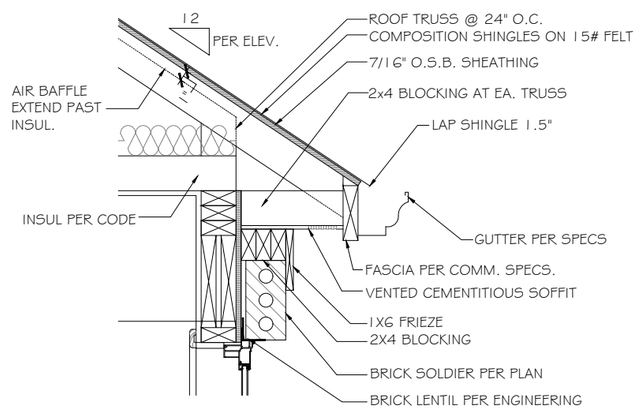

E BRICK CORNICE DETAIL
SCALE: NOT TO SCALE NON-RATED

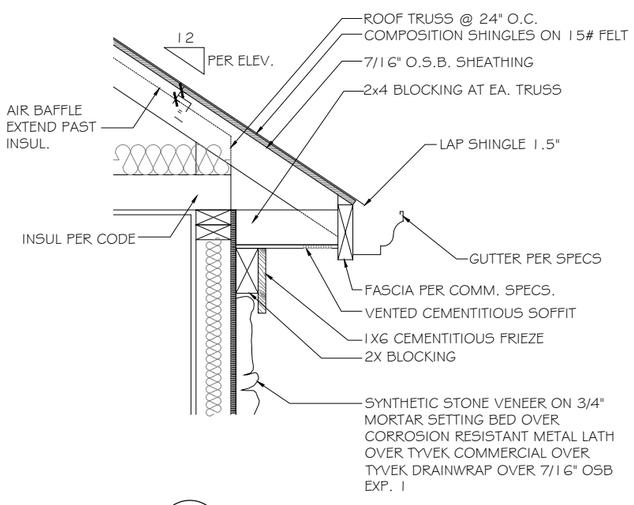

G STONE CORNICE DETAIL
SCALE: NOT TO SCALE NON-RATED

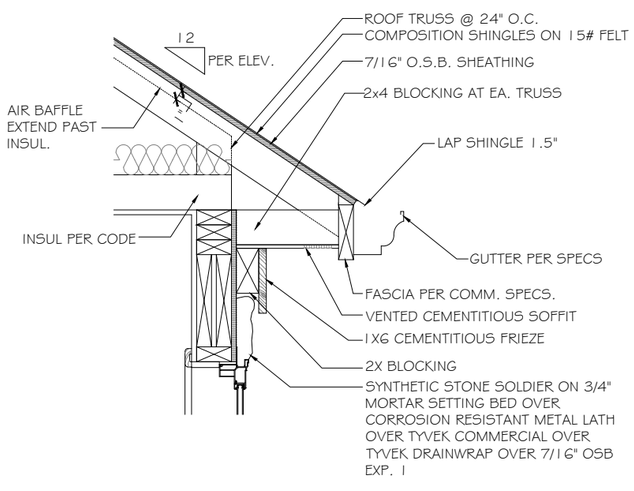

H STONE CORNICE DETAIL
SCALE: NOT TO SCALE NON-RATED

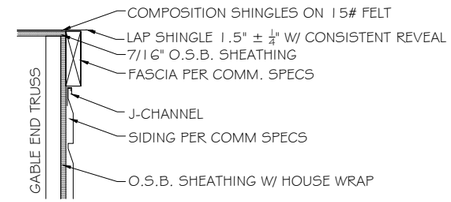

C FLUSH RAKE DETAIL
SCALE: NOT TO SCALE NON-RATED

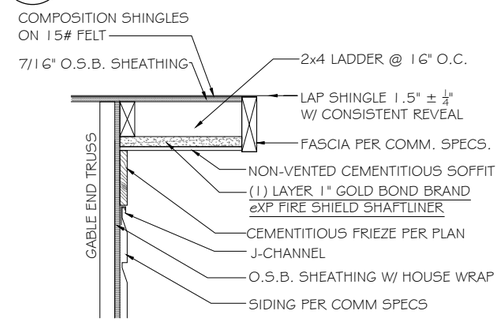

F RAKE OVERHANG DETAIL
SCALE: NOT TO SCALE 1 HR. UNDERSIDE PROTECTION WITHIN 4' OF THE PROPERTY LINE

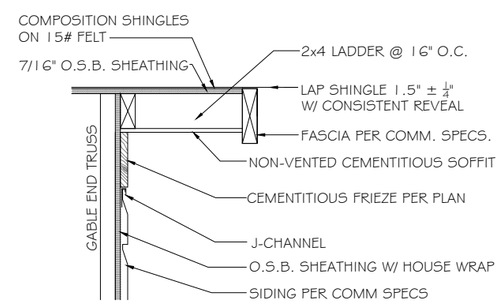

J RAKE OVERHANG DETAIL
SCALE: NOT TO SCALE NON-RATED

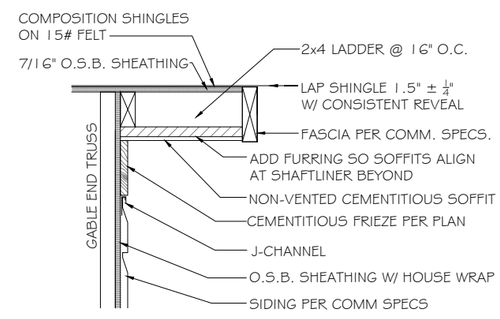

K RAKE OVERHANG DETAIL
SCALE: NOT TO SCALE NON-RATED

TrueHomes
IT'S ALL ABOUT U
2649 Brekonridge Centre Dr.
Suite 104
Monroe, N.C. 28110
704-271-1191

BUIES CREEK TOWNHOMES

DETAILS

LUCAS TH
1340

HARNETT COUNTY

Copyright True Homes L.L.C. All rights reserved. The duplication, reproduction, copying, sale, rental, licensing, or any other distribution or use of these drawings, any portion there of, or the plans depicted hereon is strictly prohibited.

PREPARED BY: Michael
DATE: 1.3.24
SCALE: AS SHOWN
REVIEWED BY: Chuck

SHEET: D10

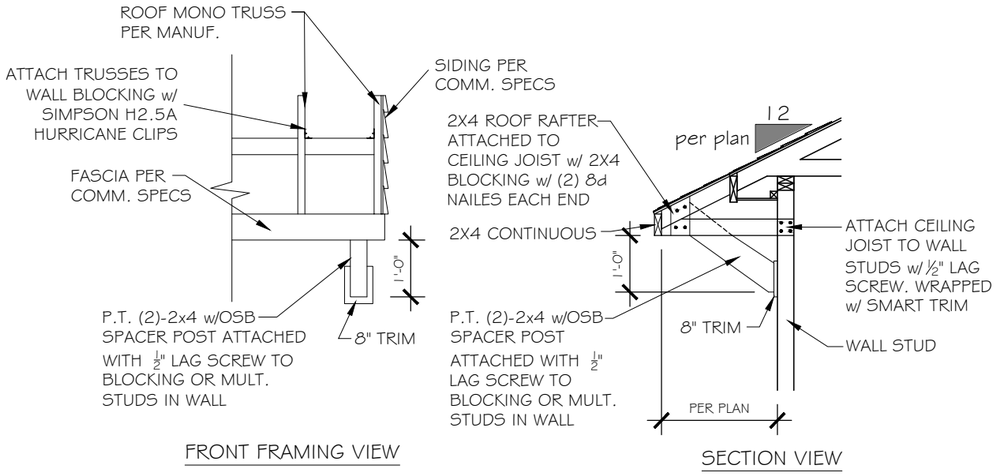

B DECORATIVE EXTENDED EAVE OVERHANG DETAIL

SCALE: 3/8" = 1'-0"

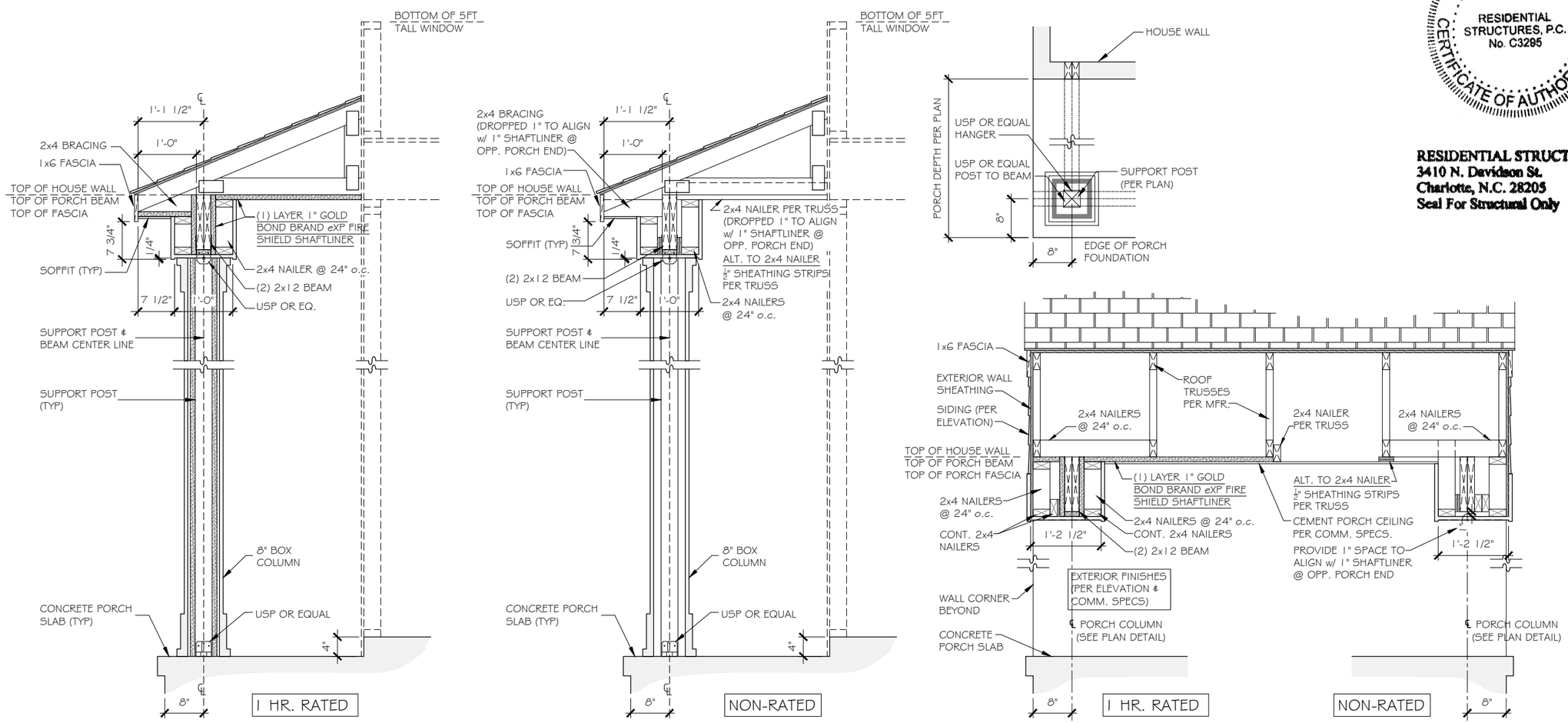

A 8" BOX COLUMN DETAIL

SCALE: 1/2" = 1'-0"

NORTH CAROLINA PROFESSIONAL SEAL 29249 ENGINEER KEVIN P. MUNSON 1/4/13

NORTH CAROLINA RESIDENTIAL STRUCTURES, P.C. No. C3295 CERTIFICATE OF AUTHORIZATION

RESIDENTIAL STRUCTURES, P.C.
3410 N. Davidson St.
Charlotte, N.C. 28205
Seal For Structural Only

TrueHomes
IT'S ALL ABOUT U
2649 Brekonridge Centre Dr.
Suite 104
Monroe, N.C. 28110
704-271-1191

BUIES CREEK TOWNHOMES

DETAILS

LUCAS TH
1340

HARNETT COUNTY

Copyright True Homes L.L.C. All rights reserved. The duplication, reproduction, copying, sale, rental, licensing, or any other distribution or use of these drawings, any portion there of, or the plans depicted hereon is strictly prohibited.

PREPARED BY: Michael

DATE: 1.3.24

SCALE: AS SHOWN

REVIEWED BY: Chuck

SHEET: D11

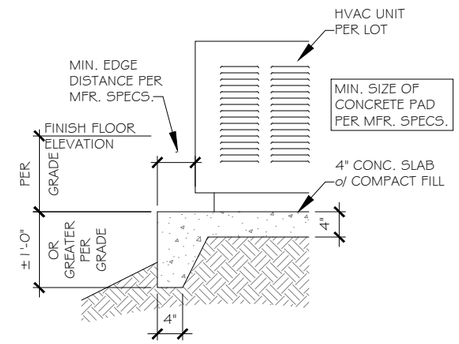

B HVAC CONCRETE PAD DETAIL
NOT TO SCALE STEEP GRADE CONDITION

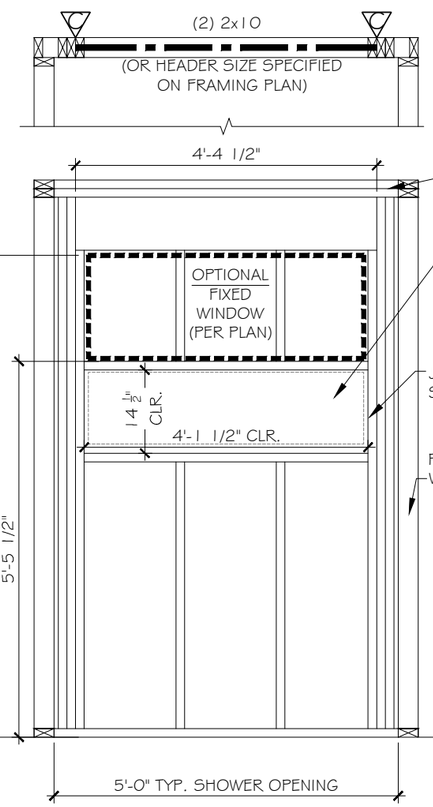

NOTES:

1. PLAN DIMENSIONS SUPERCEDE DETAIL DIMENSIONS
2. WINDOW IS OPTIONAL. SEE FLOOR PLAN TO VERIFY IF WINDOW WAS SELECTED

C TILE WALL NICHE DETAIL
SCALE: 3/8" = 1'-0"

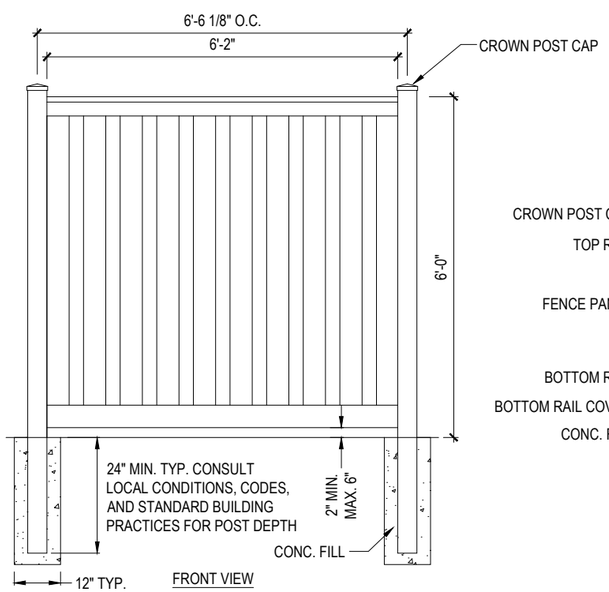

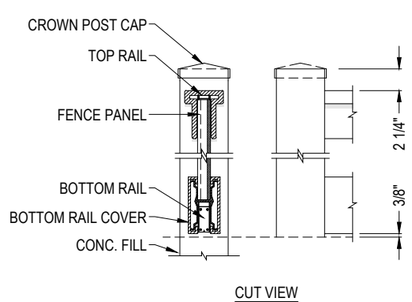

A TYP. PRIVACY FENCE DETAIL
NOT TO SCALE

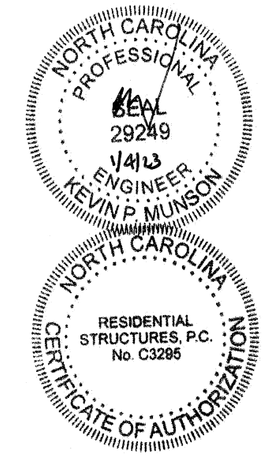

RESIDENTIAL STRUCTURES, P.C.
3410 N. Davidson St.
Charlotte, N.C. 28205
Seal For Structural Only

TrueHomes
IT'S ALL ABOUT U
2649 Brekonridge Centre Dr.
Suite 104
Monroe, N.C. 28110
704-271-1191

BUIES CREEK TOWNHOMES

DETAILS

LUCAS TH
1340

HARNETT COUNTY

Copyright True Homes L.L.C.. All rights reserved. The duplication, reproduction, copying, sale, rental, licensing, or any other distribution or use of these drawings, any portion there of, or the plans depicted hereon is strictly prohibited.

PREPARED BY: Michael
DATE: 1.3.24
SCALE: AS SHOWN
REVIEWED BY: Chuck

SHEET: D12

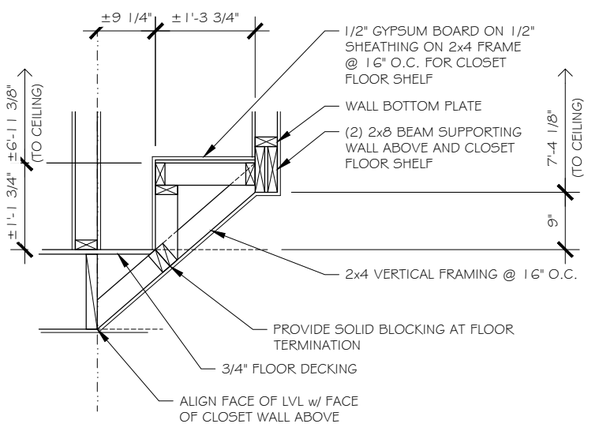

CLOSET FLOOR SHELF DETAIL

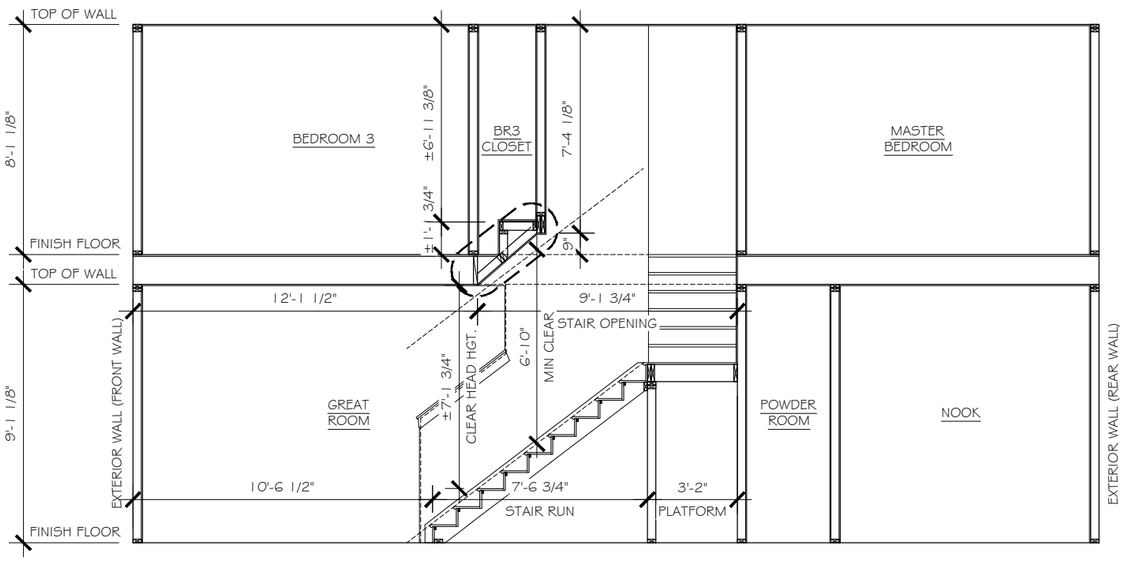

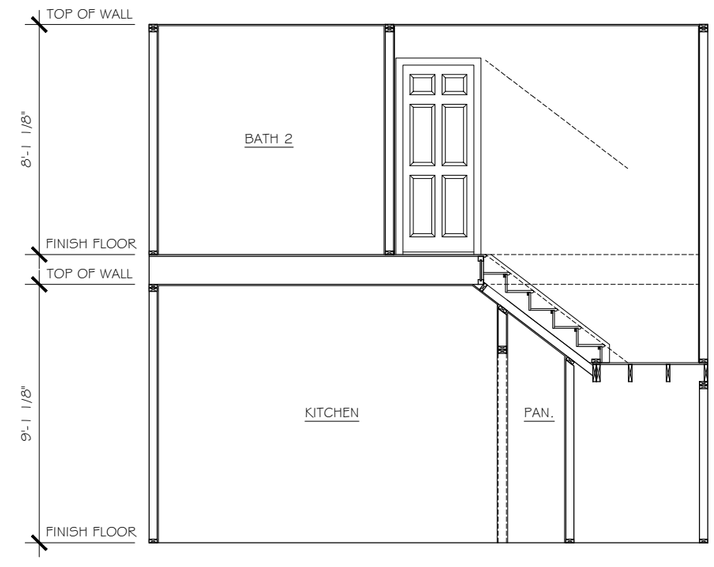

STAIR SECTIONS

TWO-STORY UNITS

TrueHomes
IT'S ALL ABOUT U
2649 Brekonridge Centre Dr.
Suite 104
Monroe, N.C. 28110
704-271-1191

BUIES CREEK TOWNHOMES

DETAILS

LUCAS TH
1340

HARNETT COUNTY

Copyright True Homes L.L.C. All rights reserved. The duplication, reproduction, copying, sale, rental, licensing, or any other distribution or use of these drawings, any portion there of, or the plans depicted hereon is strictly prohibited.

PREPARED BY: Michael

DATE: 1.3.24

SCALE: AS SHOWN

REVIEWED BY: Chuck

SHEET: D13

WALL BRACING HAS BEEN DESIGNED IN ACCORDANCE WITH THE 2018 NCRC AND/OR THE 2021 IRC AS ALLOWED PER SECTION R602.10 .

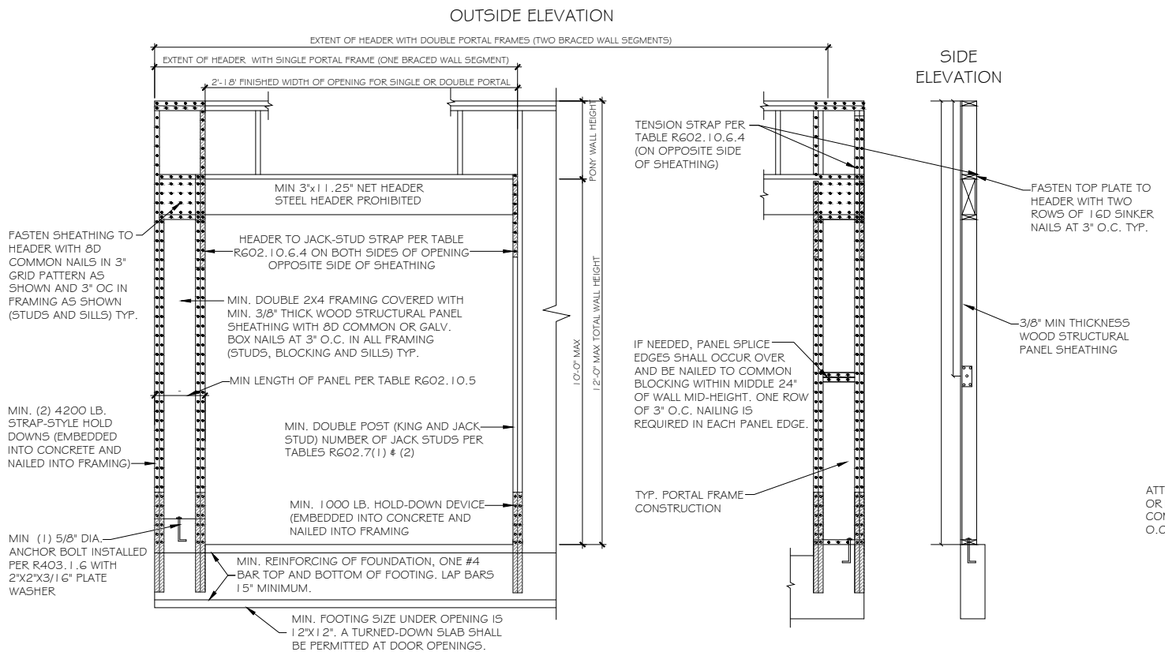

A PORTAL FRAME METHOD PFH DETAIL
SCALE: 3/8" = 1'-0"

PFH METHOD: PORTAL FRAME WITH HOLD DOWNS GARAGE DOORS AND OPENINGS 6' TO 18'

AS A SUBSTITUTE FOR THE USP STAD14 HOLD-DOWN STRAPS LOCATED ON EACH SIDE OF THE GARAGE DOOR OPENING, SIMPSON HDQ8-SDS3 (OR USP PHD8) HOLD-DOWNS MAY BE INSTALLED. THE SIMPSON HDQ8-SDS3 (USP PHD8) HOLD-DOWNS MAY BE INSTALLED WITH 7/8" THREADED ROD AND SHOULD BE EMBEDDED A MINIMUM OF 8" INTO THE CONCRETE FOOTING OR GROUTED CMU BLOCK WITH HIGH STRENGTH EPOXY. ADDITIONALLY, A 5/8" EXPANSION ANCHOR (6" MIN EMBEDMENT) OR 5/8"X 6" SIMPSON TITEN HD ANCHOR MAY BE INSTALLED AS A REPLACEMENT FOR THE 5/8" "WET SET" ANCHOR BOLT SHOWN IN THE PORTAL FRAMING WITH HOLD-DOWNS DETAIL.

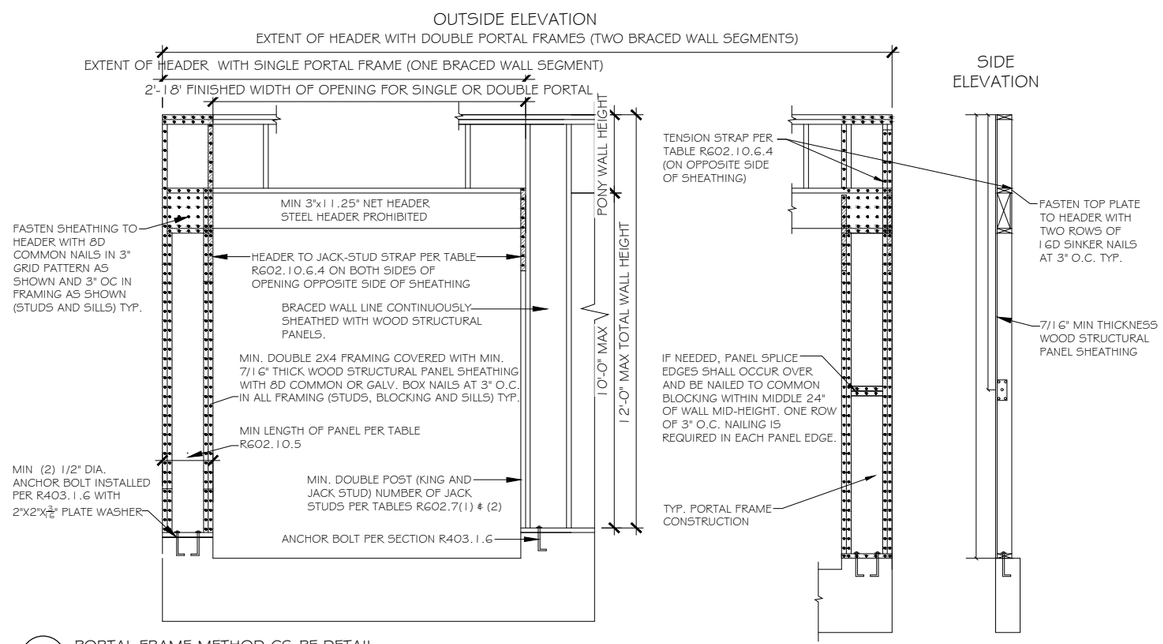

A PORTAL FRAME METHOD CS-PF DETAIL
SCALE: 3/8" = 1'-0"

CS-PF METHOD: CONTINUOUSLY SHEATHED PORTAL FRAME-GARAGE DOOR GARAGE DOORS AND OPENINGS 8' AND GREATER

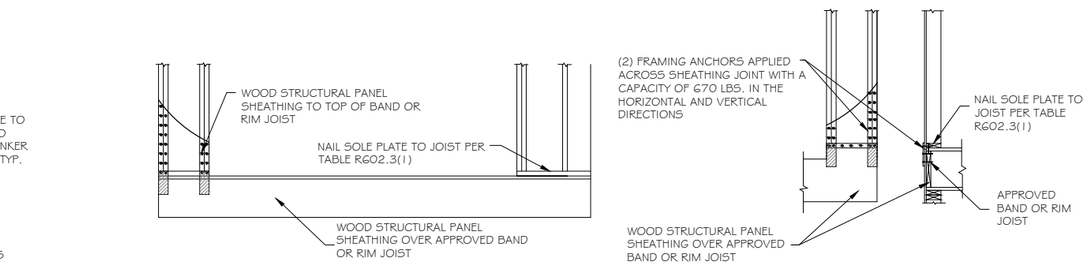

A OVER RAISED WOOD FLOOR - FRAMING ANCHOR OPTION
SCALE: 3/8" = 1'-0"
(WHEN PORTAL SHEATHING DOES NOT LAP OVER BAND OR RIM JOIST)

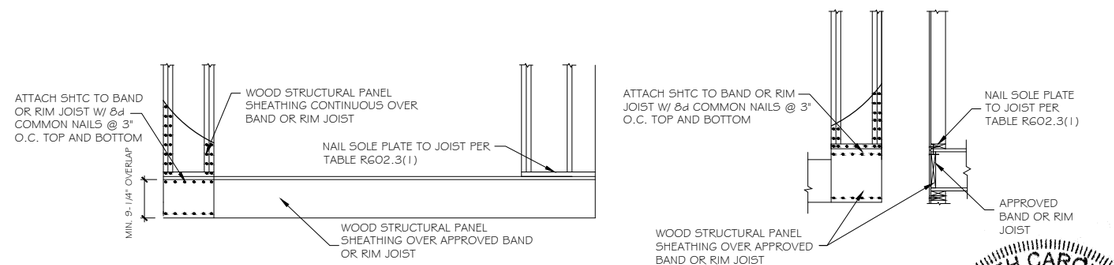

B OVER RAISED WOOD FLOOR - OVERLAP OPTION
SCALE: 3/8" = 1'-0"
(WHEN PORTAL SHEATHING LAPS OVER BAND OR RIM JOIST)

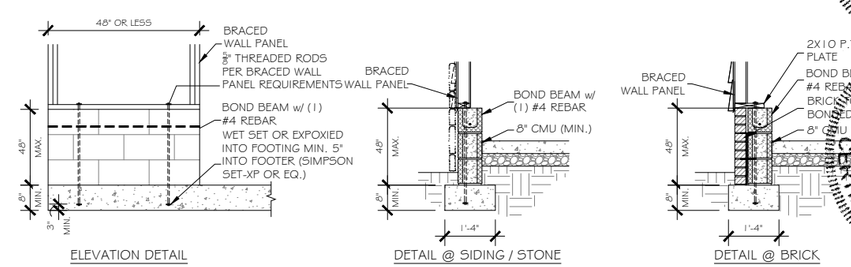

OPTIONAL MASONRY STEM WALL SUPPORTING BRACED WALL PANEL DETAILS
SCALE: 3/8" = 1'-0"

PER CODE
SHORT STEM WALL REINFORCEMENT

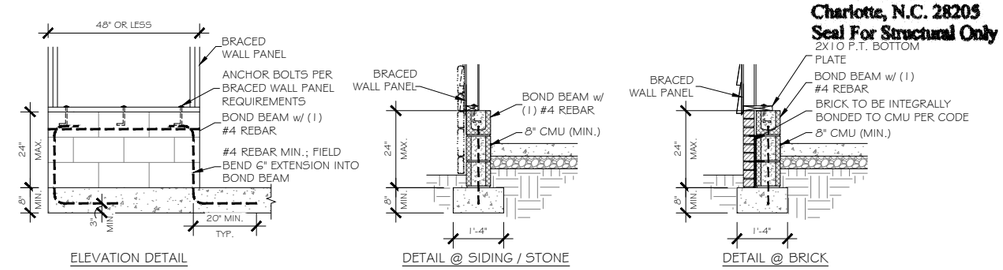

C MASONRY STEM WALL SUPPORTING BRACED WALL PANEL DETAILS
SCALE: 3/8" = 1'-0"

PER CODE
SHORT STEM WALL REINFORCEMENT

NORTH CAROLINA PROFESSIONAL SEAL 29249 ENGINEER KEVIN P. MUNSON 1/4/13

NORTH CAROLINA CERTIFICATE OF AUTHORIZATION RESIDENTIAL STRUCTURES, P.C. No. C3295

RESIDENTIAL STRUCTURES, P.C.
3410 N. Davidson St.
Charlotte, N.C. 28205
Seal For Structural Only

TrueHomes
IT'S ALL ABOUT U
2649 Brekonridge Centre Dr.
Suite 104
Monroe, N.C. 28110
704-271-1191

BUIES CREEK TOWNHOMES

DETAILS

LUCAS TH
1340

HARNETT COUNTY

Copyright True Homes L.L.C. All rights reserved. The duplication, reproduction, copying, sale, rental, licensing, or any other distribution or use of these drawings, any portion there of, or the plans depicted hereon is strictly prohibited.

PREPARED BY: Michael
DATE: 1.3.24
SCALE: AS SHOWN
REVIEWED BY: Chuck

SHEET: D14