GENERAL REQUIREMENTS

REFER TO SUBSEQUENT PLAN AND DETAIL NOTES FOR VARIATIONS AND REQUIREMENTS SPECIFIC TO REFERENCED PROJECT.

NOTES ON DRAWINGS TAKE PRECEDENCE OVER GENERAL STRUCTURAL NOTES.

DESIGN CRITERIA

BUILDING CODE CONFORMANCE (MEETS OR EXCEEDS REQUIREMENTS):

2015 INTERNATIONAL BUILDING CODE (IBC)
2015 INTERNATIONAL RESIDENTIAL CODE (IRC)
2018 NORTH CAROLINA BUILDING CODE (NCBC)
2018 NORTH CAROLINA RESIDENTIAL CODE (NCRC)

DEAD LOADS:

FLOOR DEAD LOAD	15 PSF
INTERIOR WOOD WALL DEAD LOAD	9 PSF

LIVE LOADS:

FLOOR LIVE LOAD (RESIDENTIAL)	40 PSF

REFERENCE STANDARDS:
CONFORM TO IBC CHAPTER 18 "SOILS & FOUNDATIONS"

DESIGN SOIL VALUES:

ALLOWABLE FOUNDATION PRESSURE (ASSUMED)	1500 PSF

FSI SMARTJACK SYSTEM INFO

PART	DESCRIPTION	COMMENTS	MIN YIELD STRESS, F_y	MIN TENSILE STRESS, F_u
SJ350T	ASTM A500 GRADE C $3\frac{1}{2}$"øx0.165x'L' TRIPLE-COATED IN-LINE GALVANIZED TUBE		50 KSI	55 KSI
SJ350TP	ASTM A36 PL $\frac{3}{8}$x$4\frac{1}{2}$x0'-$4\frac{1}{2}$" ASTM A53 GRADE B $1\frac{3}{4}$"øx$\frac{1}{4}$"x1.38"L CONFINING RING	WOOD BEAM CONDITION	36 KSI 35 KSI	58 KSI 60 KSI
SJ350TPS4	ASTM A36 BENT PL $\frac{3}{16}$x3x0'-6" ASTM A53 GRADE B $1\frac{3}{4}$"øx$\frac{1}{4}$"x1.38"L CONFINING RING (AT END & INTERMEDIATE LOCATIONS)	STEEL BEAM CONDITION	36 KSI 35 KSI	58 KSI 60 KSI
SJ350TBBS4	ASTM A36 PL $\frac{3}{8}$x$4\frac{1}{2}$x0'-5" BOTT BEAM SPLICE BRACKET (AT BEAM SPLICE LOCATIONS)	STEEL BEAM CONDITION	36 KSI	58 KSI
SJTBTS4	ASTM A36 PL $\frac{3}{8}$x$4\frac{1}{2}$x0'-5" TOP BEAM SPLICE BRACKET W/ (4) ASTM A108 $\frac{1}{2}$"øx$5\frac{1}{2}$" BOLTS W/ NUTS (ASTM A307 MIN) &ASTM A53 GRADE B $1\frac{3}{4}$"øx$\frac{1}{4}$x1.38"L CONFINING RING (AT BEAM SPLICE & END LOCATIONS)		36 KSI 36 KSI MIN 35 KSI	58 KSI 60 KSI MIN 60 KSI
SJAFTG	AISI/AA 356.0-T6 PL0.850x12x1'-0" CAST ALUMINUM BASE	CRUSHED STONE FTG CONDITION PER PLAN		30 KSI
SJ125ATR	ASTM A108 GRADE 1018 $1\frac{1}{4}$"øxREQ'D THREADED ROD WELDED HEAVY HEX NUT		54 KSI	64 KSI
SJ350TI	ASTM A108 GRADE 1018 $3\frac{1}{2}$"øx1" TAPERED THREADED ROD INSERT		54 KSI	64 KSI

NOTE:
INSTALL PER MFR RECOMMENDATIONS

NORTH CAROLINA PROFESSIONAL SEAL 051166 ENGINEER JESSE L. DEAN

EXPIRES: 12/31/22
DATE SIGNED: 04/22/2022

SFA Design Group, LLC
Portland, OR | Livermore, CA | Seattle, WA

BURCH RESIDENCE
FLOOR SUPPORT
124 GOLDEN OATS DR.
ANGIER, NC 27501

GENERAL NOTES

REVISIONS

PROJECT NO: RBC22-133
DESIGNED BY: IL
DRAWN BY: IL
CHECKED BY: JLD
DATE: 04.22.2022

SHEET NO: S1.1

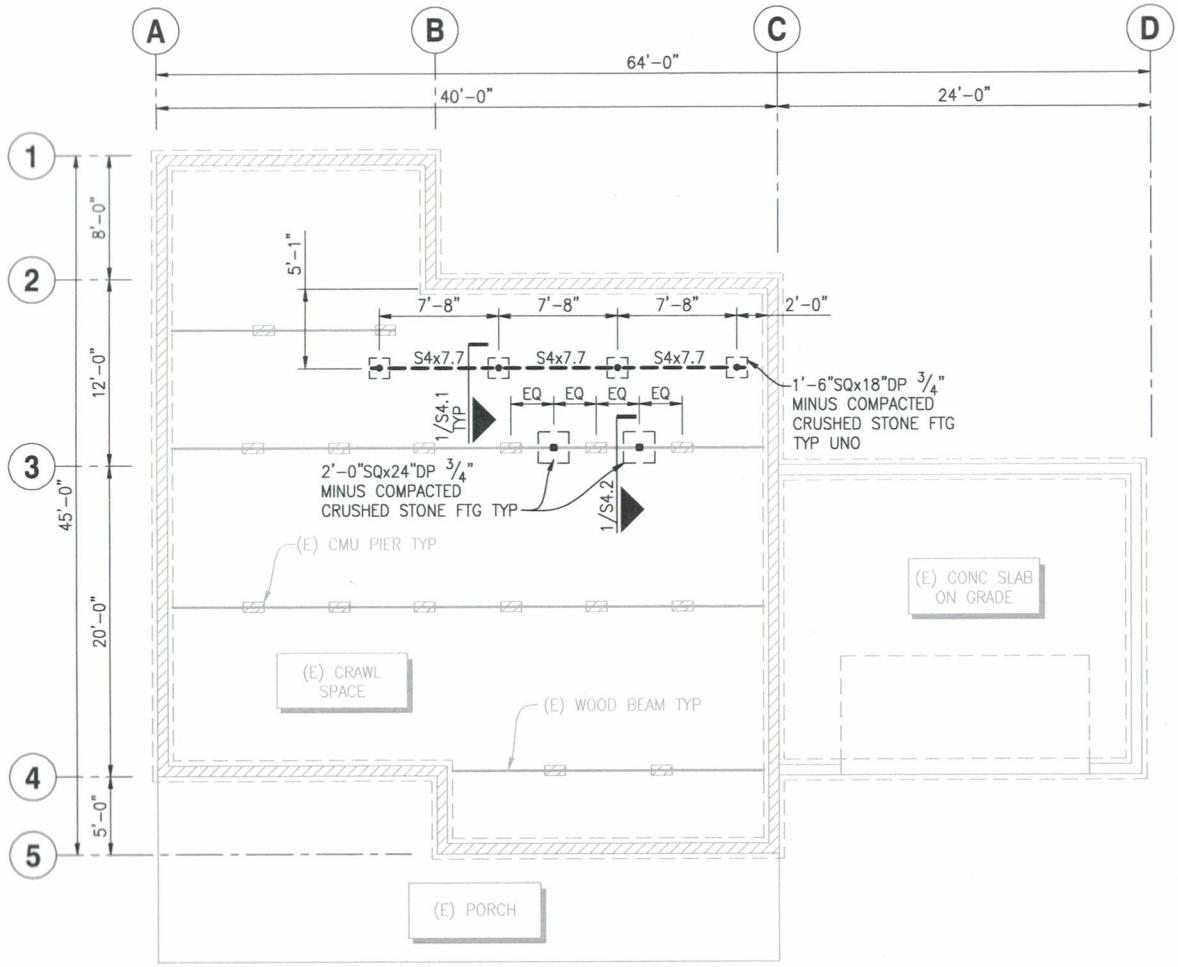

(E) FOUNDATION/(N) SMARTJACK LAYOUT PLAN

SCALE: 1/8"=1'-0"

N

NORTH CAROLINA PROFESSIONAL ENGINEER SEAL 051166 JESSE L. DEAN

EXPIRES: 12/31/22

DATE SIGNED: 04/22/2022

(E) FOUNDATION/(N) SMARTJACK LAYOUT PLAN NOTES:

1. REFERENCE S1.1 FOR GENERAL REQUIREMENTS
2. CONTRACTOR TO NOTIFY ENGINEER OF RECORD OF DISCREPANCIES BETWEEN FIELD CONDITIONS & THOSE SHOWN IN THESE DOCUMENTS PRIOR TO WORK TYP
3. INDICATES (E) CMU STEMWALL ON (E) CONC FOOTING (NOTIFY ENGINEER OF RECORD IF FIELD CONDITIONS DIFFER IN THE AREA OF WORK))
4. X/SX.X SECTION CUT – DETAIL NUMBER/SHEET NUMBER
5. INDICATES LOCATION OF FSI SJ350 SMARTJACK ((6) TOTAL) MAX LOAD TO SMARTJACK = 3,707 LBS
6. SMARTJACK SPACING SHALL BE AS INDICATED ON PLAN
7. REPLACE "IN-KIND" ALL (E) WOOD MEMBERS (JOISTS, PURLINS, SUBPURLINS, SHEATHING, STUDS, WALL PLATES) WHICH SHOW SIGNS OF DRY ROT OR STRUCTURAL DAMAGE
8. CONTRACTOR SHALL NOT REMOVE ANY (E) POSTS OR PRE-CAST FOOTINGS SUPPORTING THE (E) FLOOR FRAMING
9. FILL ALL VISIBLE CRACKS IN THE FOUNDATION WALL WITH HYDRAULIC CEMENT OR EPOXY
10. ALL CONSTRUCTION MATERIALS IN THESE DOCUMENTS ARE (N) UNO

sfa

SFA Design Group, LLC

BURCH RESIDENCE
FLOOR SUPPORT
124 GOLDEN OATS DR.
ANGIER, NC 27501

(E) FOUNDATION/ (N) SMARTJACK LAYOUT PLAN

REVISIONS

PROJECT NO: RBC22-133
DESIGNED BY: IL
DRAWN BY: IL
CHECKED BY: JLD
DATE: 04.22.2022

SHEET NO: S2.1

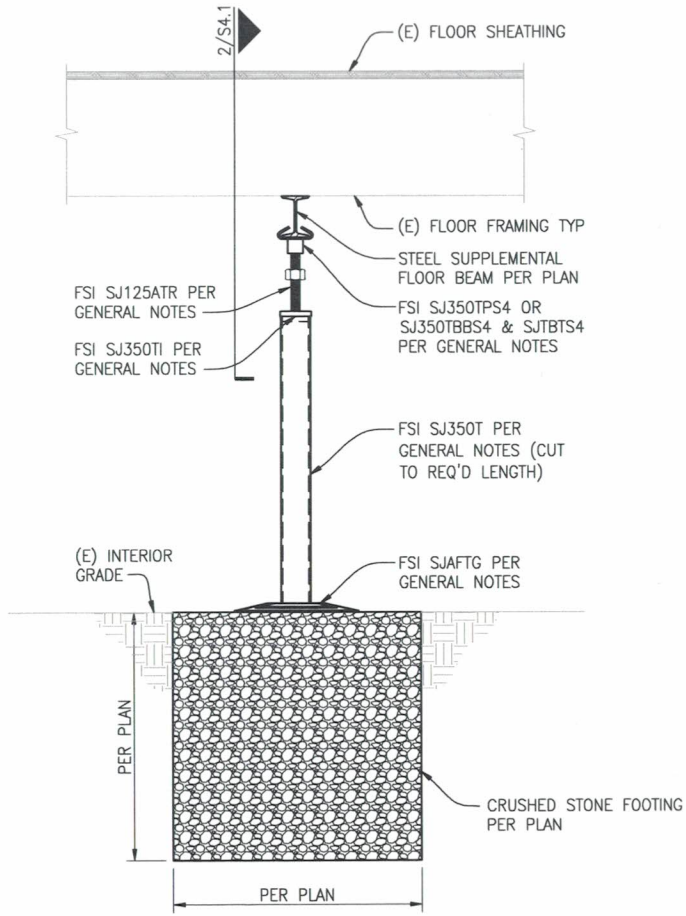

NOTES:

1. REF PLAN FOR LAYOUT & INSTALLATION REQ'S
2. INSTALL PER MFR RECOMMENDATIONS

FSI SMARTJACK IN CRAWLSPACE

SCALE: 1"=1'-0"

1

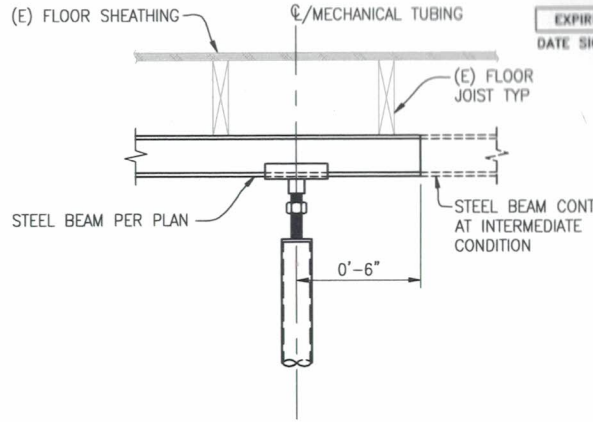

STEEL BEAM END/INTERMEDIATE CONDITION

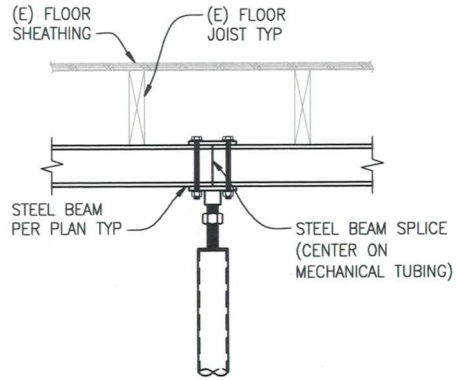

STEEL BEAM SPLICE CONDITION

NOTE:

REF 1/S4.1 FOR CALLOUTS IN COMMON

(N) SMARTJACK W/ SUPPLEMENTAL BEAM

SCALE: 1"=1'-0"

2

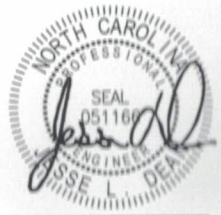

EXPIRES: 12/31/22

DATE SIGNED: 04/22/2022

sfa

SFA Design Group, LLC

BURCH RESIDENCE
FLOOR SUPPORT
124 GOLDEN OATS DR.
ANGIER, NC 27501

DETAILS

REVISIONS

PROJECT NO: RBC22-133
DESIGNED BY: IL
DRAWN BY: IL
CHECKED BY: JLD
DATE: 04.22.2022

SHEET NO:
S4.1

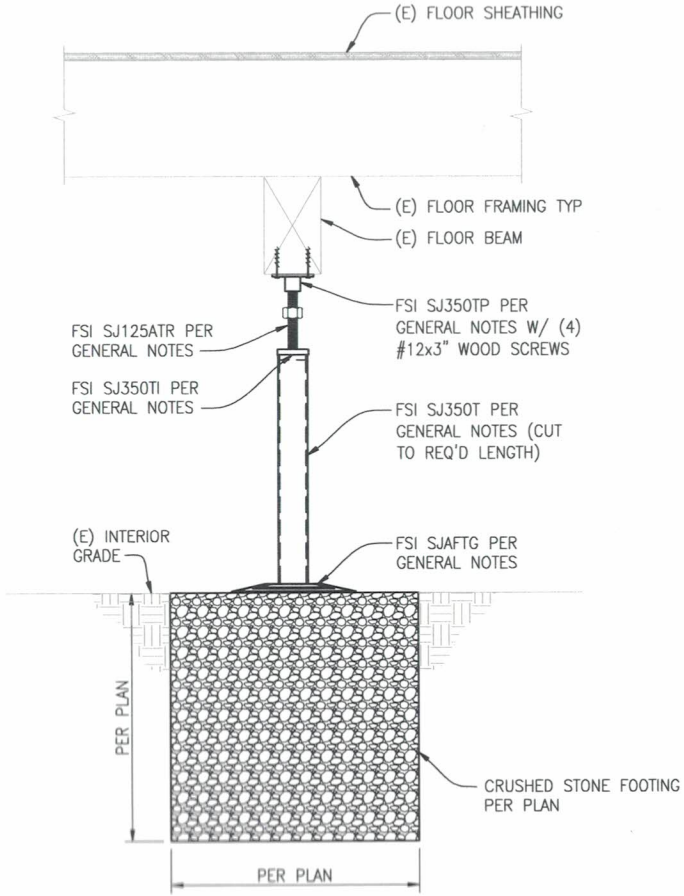

NOTES:

1. REF PLAN FOR LAYOUT & INSTALLATION REQ'S
2. INSTALL PER MFR RECOMMENDATIONS

FSI SMARTJACK IN CRAWLSPACE

1

SCALE: 1"=1'-0"

NORTH CAROLINA PROFESSIONAL ENGINEER SEAL 051160 JESSE L. DEAN

EXPIRES: 12/31/22

DATE SIGNED: 04/22/2022

sfa

SFA Design Group, LLC

BURCH RESIDENCE
FLOOR SUPPORT
124 GOLDEN OATS DR.
ANGIER, NC 27501

DETAILS

REVISIONS

PROJECT NO: RBC22-133
DESIGNED BY: IL
DRAWN BY: IL
CHECKED BY: JLD
DATE: 04.22.2022

SHEET NO: **S4.2**

SFA Design Group, LLC

STRUCTURAL | GEOTECHNICAL | SPECIAL INSPECTIONS
PORTLAND, OR | LIVERMORE, CA | SEATTLE, WA
503.641.8311 | www.sfadg.com

STRUCTURAL CALCULATIONS

Burch Residence Floor Support

124 Golden Oats Dr., Angier, NC 27501

EXPIRES: 12/31/22

Date Signed: 04/22/2022

LIMITATIONS

ENGINEER WAS RETAINED IN A LIMITED CAPACITY FOR THIS PROJECT. DESIGN IS BASED UPON INFORMATION PROVIDED BY THE CLIENT WHO IS SOLELY RESPONSIBLE FOR ACCURACY OF SAME. NO RESPONSIBILITY AND/OR LIABILITY IS ASSUMED BY, OR IS TO BE ASSIGNED TO THE ENGINEER FOR ITEMS BEYOND THAT SHOWN ON THESE SHEETS.

Project No. RBC22-133
April 22, 2022

SFA Design Group, LLC
STRUCTURAL | GEOTECHNICAL | SPECIAL INSPECTIONS

PROJECT NO.	SHEET NO.
RBC22-133	

PROJECT	DATE
Burch Residence Floor Support	4/22/2022
SUBJECT	BY
SmartJack (Steel Beam)---> Design Requirements	IL

Structural Narrative

The structural calculations and drawings enclosed support the use of FSI SmartJacks for mitigation of observed structural settlements, and support of the vertical loads tributary to it, at a residential property located in Angier, NC as referenced on the coversheet. Smart Jacks consist of a 3.5" diameter steel pipe attached to a plate by a 1.25" diameter adjustable threaded rod. This plate is attached to the bottom side of a supporting beam with (4) bolts with nuts. The steel pipe sits in a pre-fabricated base plate that bears on a 24" square x 24" deep compacted gravel base.

General

Building Department	Harnett County
Building Code Conformance (Meets Or Exceeds Requirements)	
2015 International Building Code (IBC)	
2015 International Residential Code (IRC)	
2018 North Carolina Building Code	
2018 North Carolina Residential Code	

Dead Loads

Floor Dead Load	15.0 psf
Interior Wall Dead Load	9.0 psf

Live Loads

Floor Live Load (Residential)	40.0 psf

Soil Parameters

Reference Standards	Conform to IBC Chapter 18 "Soils & Foundations".
Allowable Foundation Pressure (Assumed)	1500 psf

SFA Design Group, LLC
STRUCTURAL | GEOTECHNICAL | SPECIAL INSPECTIONS

PROJECT NO.	SHEET NO.
RBC22-133	
PROJECT: Burch	DATE: 4/22/2022
SUBJECT: SmartJack Layout	BY: IL

Project Layout (See S2.1 for Enlarged Plan)

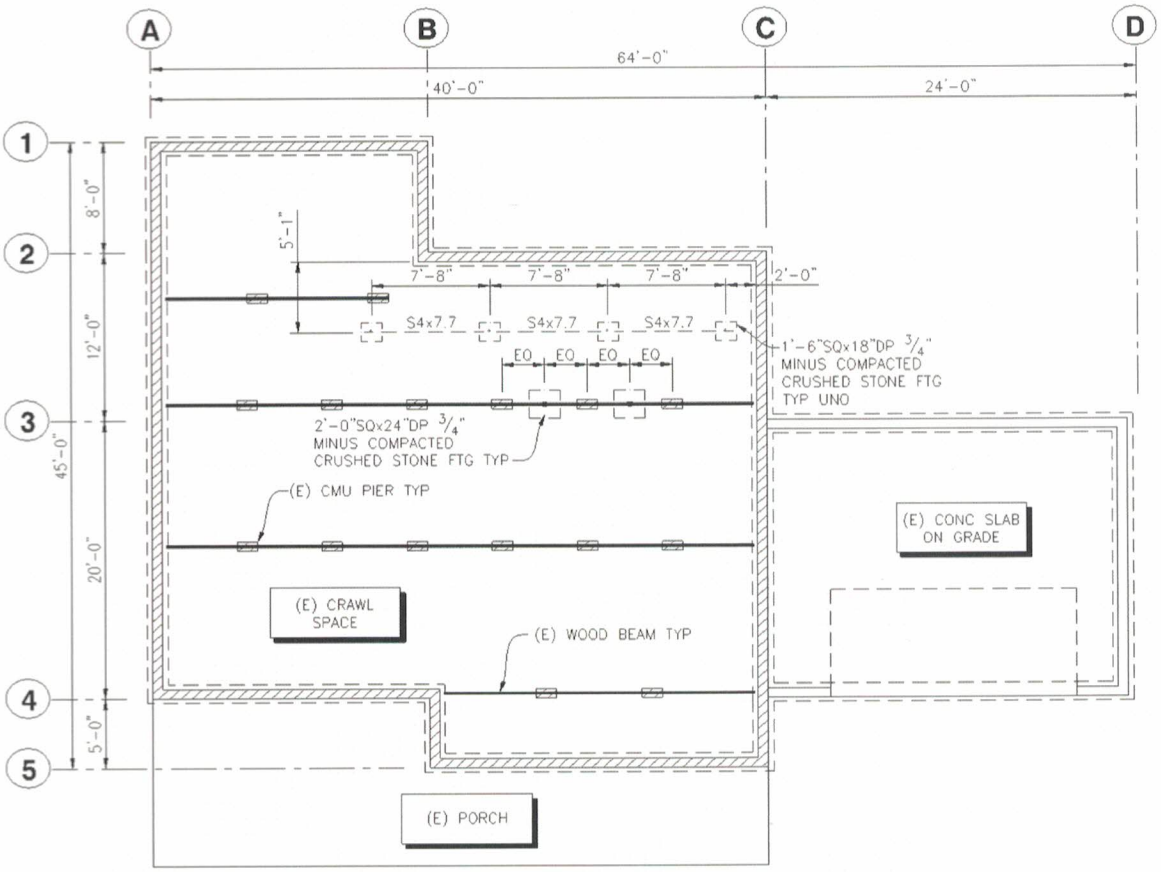

(E) FOUNDATION/(N) SMARTJACK LAYOUT PLAN

Steel Beam

Project File: ENERCALC.ec6

LIC# : KW-06015057, Build:20.22.2.9 SFA ENGINEERING LLC (c) ENERCALC INC 1983-2022

DESCRIPTION: (N) STEEL BEAM (MID-POINT)

CODE REFERENCES

Calculations per AISC 360-10, IBC 2015, CBC 2016, ASCE 7-10
Load Combination Set : IBC 2015

Material Properties

Analysis Method : Allowable Strength Design
Beam Bracing : Completely Unbraced
Bending Axis : Major Axis Bending

Fy : Steel Yield : 50.0 ksi
E: Modulus : 29,000.0 ksi

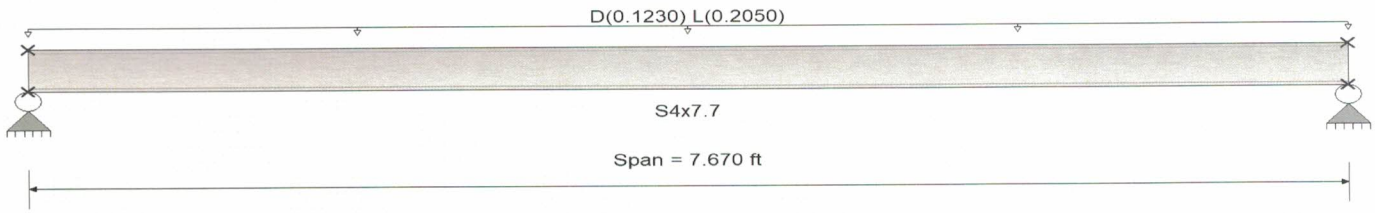

Applied Loads

Service loads entered. Load Factors will be applied for calculations.

Beam self weight NOT internally calculated and added
Loads on all spans...
Uniform Load on ALL spans : D = 0.0240, L = 0.040 ksf, Tributary Width = 5.125 ft

DESIGN SUMMARY

Design OK

Maximum Bending Stress Ratio =	**0.327** : 1	Maximum Shear Stress Ratio =	**0.081** : 1
Section used for this span	**S4x7.7**	Section used for this span	**S4x7.7**
Ma : Applied	2.412 k-ft	Va : Applied	1.258 k
Mn / Omega : Allowable	7.372 k-ft	Vn/Omega : Allowable	15.440 k
Load Combination	+D+L	Load Combination	+D+L
		Location of maximum on span	7.670 ft
Span # where maximum occurs	Span # 1	Span # where maximum occurs	Span # 1

Maximum Deflection

Max Downward Transient Deflection	0.091 in	Ratio =	1,007	>=360	
Max Upward Transient Deflection	0.000 in	Ratio =	0	<360	Span: 1 : L Only
Max Downward Total Deflection	0.146 in	Ratio =	629	>=240.	Span: 1 : +D+L
Max Upward Total Deflection	0.000 in	Ratio =	0	<240.0	

Vertical Reactions

Support notation : Far left is #' Values in KIPS

Load Combination	Support 1	Support 2	
Overall MAXimum	1.258	1.258	0.783
Overall MINimum	0.283	0.283	0.783
D Only	0.472	0.472	0.783
+D+L	1.258	1.258	0.783
+D+0.750L	1.061	1.061	0.783
+0.60D	0.283	0.283	0.783
L Only	0.786	0.786	0.783

DESCRIPTION: (N) STEEL BEAM

CODE REFERENCES

Calculations per AISC 360-10, IBC 2015, CBC 2016, ASCE 7-10
Load Combination Set : IBC 2015

Material Properties

Analysis Method : Allowable Strength Design
Beam Bracing : Completely Unbraced
Bending Axis : Major Axis Bending

Fy : Steel Yield : 50.0 ksi
E: Modulus : 29,000.0 ksi

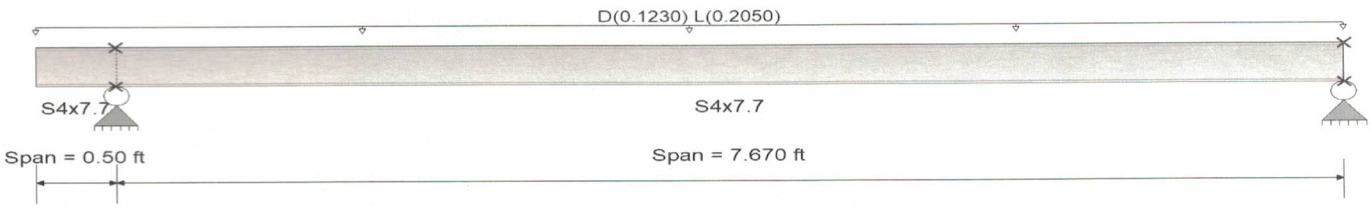

Applied Loads

Service loads entered. Load Factors will be applied for calculations.

Beam self weight NOT internally calculated and added
Loads on all spans...
Uniform Load on ALL spans : D = 0.0240, L = 0.040 ksf, Tributary Width = 5.125 ft

DESIGN SUMMARY

Design OK

Maximum Bending Stress Ratio =	**0.324** : 1	Maximum Shear Stress Ratio =	**0.082** : 1
Section used for this span	**S4x7.7**	Section used for this span	**S4x7.7**
Ma : Applied	2.391 k-ft	Va : Applied	1.263 k
Mn / Omega : Allowable	7.385 k-ft	Vn/Omega : Allowable	15.440 k
Load Combination	+D+L	Load Combination	+D+L
		Location of maximum on span	0.500 ft
Span # where maximum occurs	Span # 2	Span # where maximum occurs	Span # 1

Maximum Deflection

Max Downward Transient Deflection	0.091 in	Ratio =	1,015	>=360	Span: 2 : L Only
Max Upward Transient Deflection	-0.019 in	Ratio =	643	>=360	Span: 2 : L Only
Max Downward Total Deflection	0.145 in	Ratio =	635	>=240.	Span: 2 : +D+L
Max Upward Total Deflection	-0.030 in	Ratio =	402	>=240.	Span: 2 : +D+L

Vertical Reactions

Support notation : Far left is #' Values in KIPS

Load Combination	Support 1	Support 2	Support 3
Overall MAXimum		1.427	1.253
Overall MINimum		0.321	0.282
D Only		0.535	0.470
+D+L		1.427	1.253
+D+0.750L		1.204	1.057
+0.60D		0.321	0.282
L Only		0.892	0.783

SFA Design Group, LLC
STRUCTURAL | GEOTECHNICAL | SPECIAL INSPECTIONS

PROJECT NO.	SHEET NO.
RBC22-133	

PROJECT	DATE
Burch Residence Floor Support	4/22/2022
SUBJECT	BY
Foundation Supportworks SJ350 Smart Jack System	IL

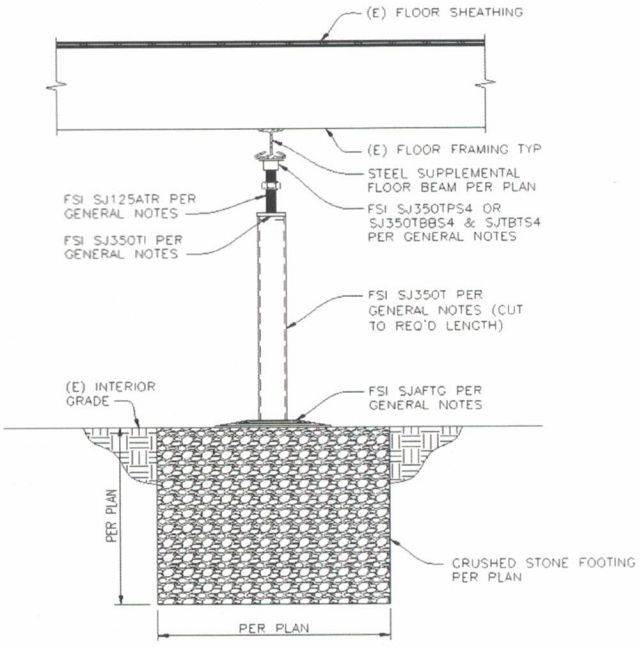

Note: Section above is a general representation of smartjack system, refer to plan for layout and project specific details.

Smart Jack System =	**SJ350**	
Footing Type =	**Gravel**	
P_{max} =	**2.506**	**kips**
Maximum Tube Unbraced Length, d_t =	**8.000**	**ft**
Maximum Threaded Rod Unbraced Length, d_{tr} =	**3.000**	**in**
Eccentricity, e_{max} =	**0.670**	**in**
Moment =	**1.679**	**in-kips**

Tube Properties

Design Tube OD =	**3.500**	**in**
Design Wall Thickness =	**0.165**	**in**
k =	**1.00**	
r =	**1.181**	**in**
A =	**1.729**	**in^2**
c =	**1.750**	**in**
S =	**1.377**	**in^3**
I =	**2.409**	**in^4**
E =	**29000**	**ksi**
Fy =	**50**	**ksi**

Tube Output

kl/r =	81.32		Slenderness OK
Cc =	107.00		
F'e =	22.57	ksi	
Fa =	18.75	ksi	
fa =	1.45	ksi	
Fb =	33.00	ksi	
fb =	1.22	ksi	
Cm =	1.00		
fa/Fa =	0.08		Eq H1-3 may be used
Eq H1-1	NA		
Eq H1-2	NA		
Eq H1-3	0.11		Pier OK

Threaded Rod Properties

Threaded Rod Dia. =	1.250	in
k =	1.00	
r =	0.313	in
A =	1.227	in^2
c =	0.625	in
S =	0.192	in^3
I =	0.120	in^4
E =	29000	ksi
Fy =	70	ksi

Threaded Rod Output

kl/r =	9.60		Slenderness OK
Cc =	90.43		
F'e =	1619.74	ksi	
Fa =	40.79	ksi	
fa =	2.04	ksi	
Fb =	46.20	ksi	
fb =	8.76	ksi	
Cm =	1.00		
fa/Fa =	0.05		Eq H1-3 may be used
Eq H1-1	NA		
Eq H1-2	NA		
Eq H1-3	0.24		Tube OK

Bearing Capacity of Crushed Stone Footing

Footing Depth =	16	in	
Footing Width =	16	in	
Footing Length =	16	in	
Soil Bearing Capacity =	1500	psf	
Capacity =	2.67	k	OK

Results

MAX LOAD TO SMART JACK = 2506LB
3.5 IN DIAMETER SMART JACK TUBE WITH 0.165 IN. THICK WALL AND MAX HEIGHT OF 8FT
1.25 IN DIAMETER SOLID THREADED ROD WITH MAX HEIGHT OF 3 IN
16 IN SQR X 16 IN DP STRUCTURAL FILL
EMBED THREADED ROD A MINIMUM OF 3/4 IN INTO CONFINING RING AND THREADED INSERT

General Beam Analysis

Project File: ENERCALC.ec6

LIC# : KW-06015057, Build:20.22.2.9 SFA ENGINEERING LLC (c) ENERCALC INC 1983-2022

DESCRIPTION: (E) WOOD BEAM

General Beam Properties

Elastic Modulus 29,000.0 ksi

Span #1	Span Length =	5.580 ft	Area =	10.0 in^2	Moment of Inertia =	100.0	in^4
Span #2	Span Length =	2.790 ft	Area =	10.0 in^2	Moment of Inertia =	100.0	in^4
Span #3	Span Length =	2.790 ft	Area =	10.0 in^2	Moment of Inertia =	100.0	in^4
Span #4	Span Length =	2.790 ft	Area =	10.0 in^2	Moment of Inertia =	100.0	in^4
Span #5	Span Length =	2.790 ft	Area =	10.0 in^2	Moment of Inertia =	100.0	in^4
Span #6	Span Length =	5.580 ft	Area =	10.0 in^2	Moment of Inertia =	100.0	in^4
Span #7	Span Length =	5.580 ft	Area =	10.0 in^2	Moment of Inertia =	100.0	in^4
Span #8	Span Length =	5.580 ft	Area =	10.0 in^2	Moment of Inertia =	100.0	in^4

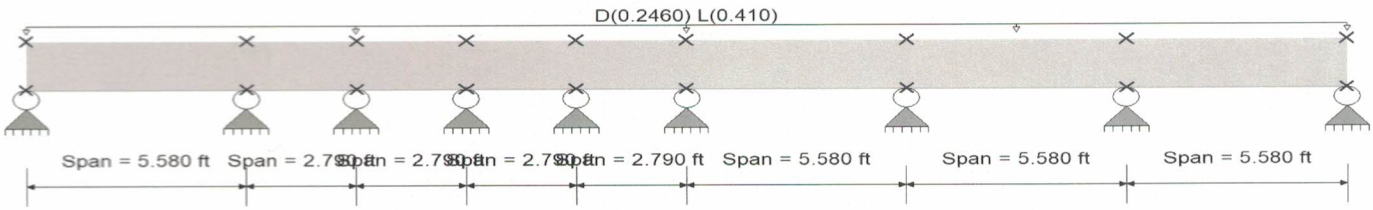

Applied Loads

Service loads entered. Load Factors will be applied for calculations.

Loads on all spans...

Uniform Load on ALL spans : D = 0.0240, L = 0.040 k/ft, Tributary Width = 10.250 ft

DESIGN SUMMARY

Maximum Bending =	2.131 k-ft	Maximum Shear =	2.212 k
Load Combination	+D+L	Load Combination	+D+L
Span # where maximum occurs	Span # 7	Span # where maximum occurs	Span # 7
Location of maximum on span	5.580 ft	Location of maximum on span	5.580 ft

Maximum Deflection

Max Downward Transient Deflection	0.002 in	37538
Max Upward Transient Deflection	0.000 in	0
Max Downward Total Deflection	0.003 in	23461
Max Upward Total Deflection	-0.000 in	110570

Vertical Reactions

Support notation : Far left is #' Values in KIPS

Load Combination	Support 1	Support 2	Support 3	Support 4	Support 5	Support 6	Support 7	Support 8	Support 9
Overall MAXimum	1.487	3.770	0.939	2.197	1.255	3.099	3.646	4.122	1.448
Overall MINimum									
D Only	0.558	1.414	0.352	0.824	0.471	1.162	1.367	1.546	0.543
+D+L	1.487	3.770	0.939	2.197	1.255	3.099	3.646	4.122	1.448
+D+0.750L	1.255	3.181	0.792	1.854	1.059	2.615	3.077	3.478	1.222
+0.60D	0.335	0.848	0.211	0.494	0.282	0.697	0.820	0.927	0.326
L Only	0.930	2.356	0.587	1.373	0.784	1.937	2.279	2.576	0.905

SFA Design Group, LLC
STRUCTURAL | GEOTECHNICAL | SPECIAL INSPECTIONS

PROJECT NO.	SHEET NO.
RBC22-133	

PROJECT	DATE
Burch Residence Floor Support	4/22/2022
SUBJECT	BY
Foundation Supportworks SJ350 Smart Jack System	IL

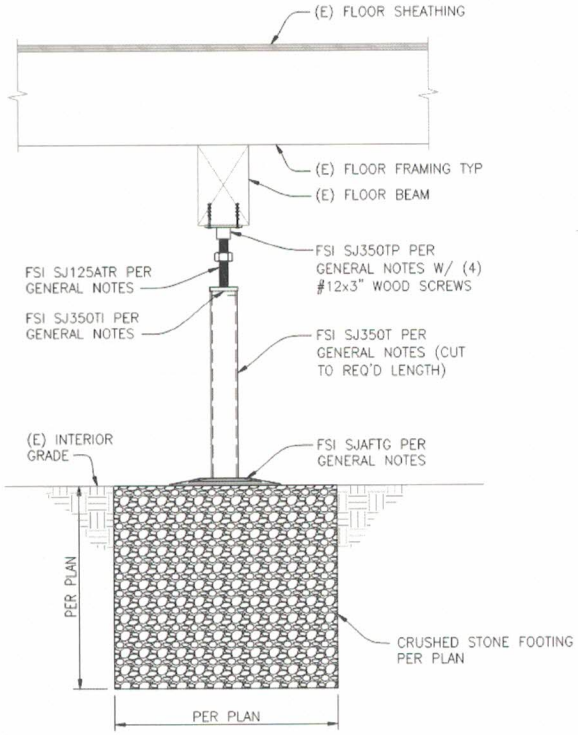

Note: Section above is a general representation of smartjack system, refer to plan for layout and project specific details.

Smart Jack System =	**SJ350**	
Footing Type =	**Gravel**	
P_{max} =	**3.770**	**kips**
Maximum Tube Unbraced Length, d_t =	**8.000**	**ft**
Maximum Threaded Rod Unbraced Length, d_{tr} =	**3.000**	**in**
Eccentricity, e_{max} =	**0.670**	**in**
Moment =	**2.526**	**in-kips**

Tube Properties

Design Tube OD =	**3.500**	**in**
Design Wall Thickness =	**0.165**	**in**
k =	**1.00**	
r =	**1.181**	**in**
A =	**1.729**	**in^2**
c =	**1.750**	**in**
S =	**1.377**	**in^3**
I =	**2.409**	**in^4**
E =	**29000**	**ksi**
Fy =	**50**	**ksi**

Tube Output

kl/r =	81.32		Slenderness OK
Cc =	107.00		
F'e =	22.57	ksi	
Fa =	18.75	ksi	
fa =	2.18	ksi	
Fb =	33.00	ksi	
fb =	1.83	ksi	
Cm =	1.00		
fa/Fa =	0.12		Eq H1-3 may be used
Eq H1-1	NA		
Eq H1-2	NA		
Eq H1-3	0.17		Pier OK

Threaded Rod Properties

Threaded Rod Dia. =	1.250	in	
k =	1.00		
r =	0.313	in	
A =	1.227	in^2	
c =	0.625	in	
S =	0.192	in^3	
I =	0.120	in^4	
E =	29000	ksi	
Fy =	70	ksi	

Threaded Rod Output

kl/r =	9.60		Slenderness OK
Cc =	90.43		
F'e =	1619.74	ksi	
Fa =	40.79	ksi	
fa =	3.07	ksi	
Fb =	46.20	ksi	
fb =	13.17	ksi	
Cm =	1.00		
fa/Fa =	0.08		Eq H1-3 may be used
Eq H1-1	NA		
Eq H1-2	NA		
Eq H1-3	0.36		Tube OK

Bearing Capacity of Crushed Stone Footing

Footing Depth =	24 in		
Footing Width =	24 in		
Footing Length =	24 in		
Soil Bearing Capacity =	1500	psf	
Capacity =	6.00	k	OK

Results

MAX LOAD TO SMART JACK = 3770LB
3.5 IN DIAMETER SMART JACK TUBE WITH 0.165 IN. THICK WALL AND MAX HEIGHT OF 8FT
1.25 IN DIAMETER SOLID THREADED ROD WITH MAX HEIGHT OF 3 IN
24 IN SQR X 24 IN DP STRUCTURAL FILL
EMBED THREADED ROD A MINIMUM OF 3/4 IN INTO CONFINING RING AND THREADED INSERT