ENGINEERING BY
TRENCO
A MiTek Affiliate

Trenco
818 Soundside Rd
Edenton, NC 27932

Re: J0918-4429
Jason Price / Campbell Pointe Bldg. 25

The truss drawing(s) referenced below have been prepared by Truss Engineering Co. under my direct supervision based on the parameters provided by Comtech, Inc - Fayetteville.

Pages or sheets covered by this seal: E12341601 thru E12341651

My license renewal date for the state of North Carolina is December 31, 2018.

North Carolina COA: C-0844

NORTH CAROLINA
PROFESSIONAL
SEAL
28677
ENGINEER
JOHN V. GALINSKI

October 22,2018

Galinski, John

IMPORTANT NOTE: Truss Engineer's responsibility is solely for design of individual trusses based upon design parameters shown on referenced truss drawings. Parameters have not been verified as appropriate for any use. Any location identification specified is for file reference only and has not been used in preparing design. Suitability of truss designs for any particular building is the responsibility of the building designer, not the Truss Engineer, per ANSI/TPI-1, Chapter 2.

Job	Truss	Truss Type	Qty	Ply	Jason Price / Campbell Pointe Bldg. 25
J0918-4429	A01	HIP GIRDER	1	2	E12341601 Job Reference (optional)

Comtech, Inc., Fayetteville, NC 28309 — 8.130 s Mar 11 2018 MiTek Industries, Inc. Mon Oct 22 15:13:11 2018 Page 1

ID:ZzXTyMvxB55ZLn?FA7qN0rzLZck-dOPeUrWgkhBINGLBNaGUmGYDeguh7Yl0p5fxbLyQq4c

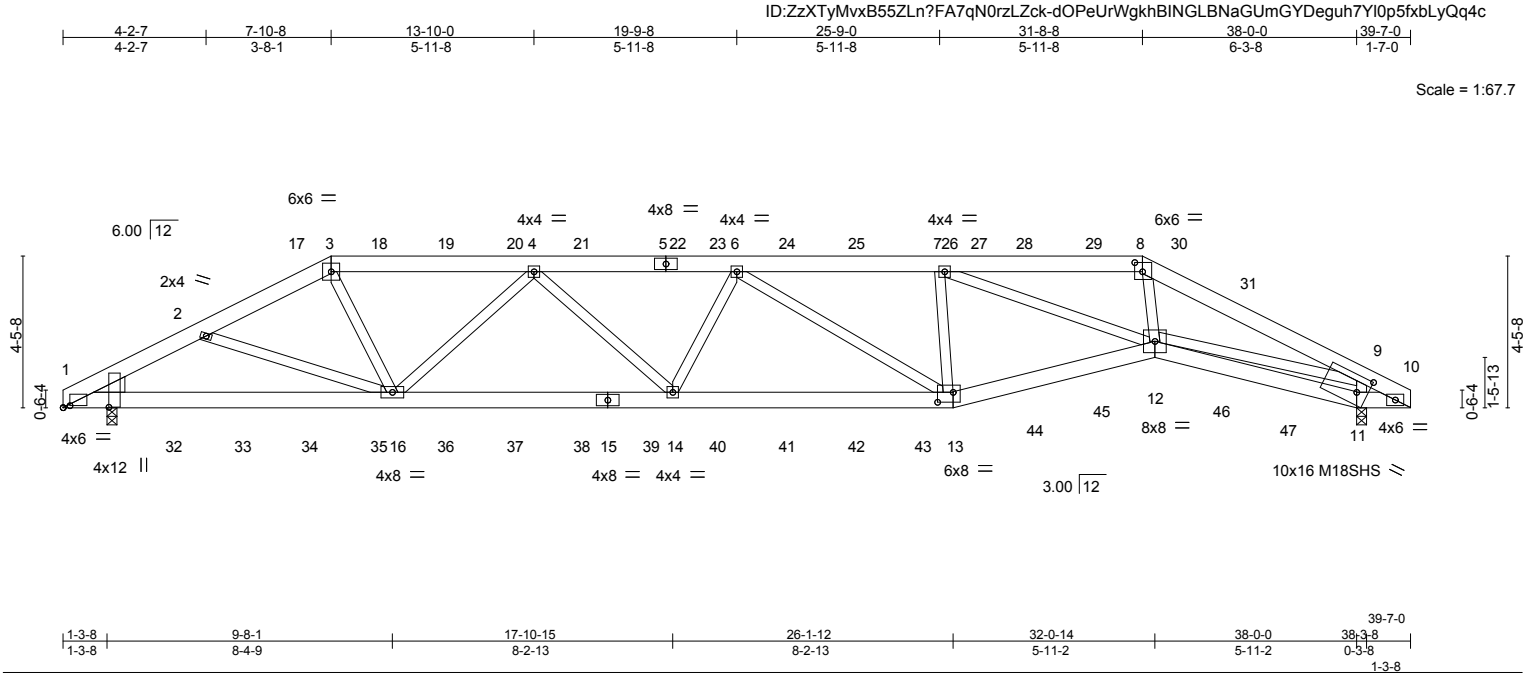

Plate Offsets (X,Y)-- [1:0-0-2,1-4-2], [1:0-2-6,0-0-11], [8:0-2-12,0-3-4], [11:0-3-12,0-5-12], [13:0-5-8,0-3-8]

LOADING (psf)			SPACING- 2-0-0	CSI.		DEFL. in (loc) l/defl L/d	PLATES	GRIP
TCLL	20.0		Plate Grip DOL 1.15	TC	0.82	Vert(LL) -0.15 13-14 >999 360	MT20	244/190
TCDL	10.0		Lumber DOL 1.15	BC	0.52	Vert(TL) -0.39 13-14 >999 240	M18SHS	244/190
BCLL	0.0	*	Rep Stress Incr NO	WB	0.88	Horz(TL) 0.14 11 n/a n/a		
BCDL	10.0		Code IRC2009/TPI2007	Matrix-S		Wind(LL) 0.16 13-14 >999 240	Weight: 536 lb	FT = 20%

LUMBER-
TOP CHORD 2x6 SP No.1
BOT CHORD 2x6 SP No.1
WEBS 2x4 SP No.3
WEDGE
Left: 2x6 SP No.1

BRACING-
TOP CHORD Structural wood sheathing directly applied or 6-0-0 oc purlins.
BOT CHORD Rigid ceiling directly applied or 10-0-0 oc bracing.

REACTIONS. (lb/size) 11=2413/0-3-8, 1=2308/0-3-8
Max Horz 1=-51(LC 3)
Max Uplift 11=-608(LC 6), 1=-518(LC 4)

FORCES. (lb) - Max. Comp./Max. Ten. - All forces 250 (lb) or less except when shown.
TOP CHORD 1-2=-4251/1046, 2-3=-4035/1051, 3-4=-4257/1110, 4-6=-5392/1449, 6-7=-4816/1378, 7-8=-4580/1267, 8-9=-5602/1490, 9-10=-1041/280
BOT CHORD 1-16=-945/3736, 14-16=-1391/5093, 13-14=-1489/5436, 12-13=-1343/4918, 11-12=-174/692, 10-11=-278/1068
WEBS 3-16=-344/1554, 4-16=-1226/485, 4-14=-51/485, 6-13=-762/188, 7-13=-540/304, 7-12=-322/118, 8-12=-567/2168, 9-12=-1158/4264, 9-11=-2140/578

NOTES-
1) 2-ply truss to be connected together with 10d (0.131"x3") nails as follows:
Top chords connected as follows: 2x6 - 2 rows staggered at 0-9-0 oc.
Bottom chords connected as follows: 2x6 - 2 rows staggered at 0-9-0 oc.
Webs connected as follows: 2x4 - 1 row at 0-9-0 oc, Except member 11-9 2x4 - 1 row at 0-7-0 oc.
2) All loads are considered equally applied to all plies, except if noted as front (F) or back (B) face in the LOAD CASE(S) section. Ply to ply connections have been provided to distribute only loads noted as (F) or (B), unless otherwise indicated.
3) Unbalanced roof live loads have been considered for this design.
4) Wind: ASCE 7-05; 100mph; TCDL=6.0psf; BCDL=5.0psf; h=15ft; Cat. II; Exp C; enclosed; MWFRS (low-rise); cantilever left and right exposed ; Lumber DOL=1.60 plate grip DOL=1.60
5) Provide adequate drainage to prevent water ponding.
6) All plates are MT20 plates unless otherwise indicated.
7) This truss has been designed for a 10.0 psf bottom chord live load nonconcurrent with any other live loads.
8) * This truss has been designed for a live load of 20.0psf on the bottom chord in all areas with a clearance greater than 6-0-0 between the bottom chord and any other members.
9) Provide mechanical connection (by others) of truss to bearing plate capable of withstanding 100 lb uplift at joint(s) except (jt=lb) 11=608, 1=518.

NORTH CAROLINA PROFESSIONAL SEAL 28677 ENGINEER JOHN L. GALINSKI

October 22,2018

Continued on page 2

ENGINEERING BY TRENCO A MiTek Affiliate
818 Soundside Road
Edenton, NC 27932

NOTES-

10) Hanger(s) or other connection device(s) shall be provided sufficient to support concentrated load(s) 2 lb down at 7-2-12, 53 lb down and 67 lb up at 9-2-12, 53 lb down and 67 lb up at 11-2-12, 53 lb down and 67 lb up at 13-2-12, 53 lb down and 67 lb up at 15-2-12, 53 lb down and 67 lb up at 17-2-12, 53 lb down and 67 lb up at 19-2-12, 53 lb down and 67 lb up at 21-2-12, 53 lb down and 67 lb up at 23-2-12, 53 lb down and 67 lb up at 25-2-12, 53 lb down and 67 lb up at 26-1-4, 50 lb down and 60 lb up at 28-2-12, 50 lb down and 55 lb up at 30-2-12, and 35 lb down and 10 lb up at 32-2-12, and 29 lb down and 17 lb up at 34-2-12 on top chord, and 132 lb down and 36 lb up at 3-2-12, 132 lb down and 36 lb up at 5-2-12, 122 lb down and 67 lb up at 7-2-12, 37 lb down at 9-2-12, 37 lb down at 11-2-12, 37 lb down at 13-2-12, 37 lb down at 15-2-12, 37 lb down at 17-2-12, 37 lb down at 19-2-12, 37 lb down at 21-2-12, 37 lb down at 23-2-12, 37 lb down at 25-2-12, 37 lb down at 26-1-12, 33 lb down and 14 lb up at 28-2-12, 45 lb down and 16 lb up at 30-2-12, 90 lb down and 58 lb up at 32-0-14, and 86 lb down and 33 lb up at 34-2-12, and 89 lb down and 36 lb up at 36-2-12 on bottom chord. The design/selection of such connection device(s) is the responsibility of others.

LOAD CASE(S) Standard

1) Dead + Roof Live (balanced): Lumber Increase=1.15, Plate Increase=1.15
   Uniform Loads (plf)
   Vert: 1-3=-60, 3-8=-60, 8-10=-60, 1-13=-20, 12-13=-20, 11-12=-20, 10-11=-20
   Concentrated Loads (lb)
   Vert: 13=-23(F) 12=-90(F) 18=-53(F) 19=-53(F) 20=-53(F) 21=-53(F) 22=-53(F) 23=-53(F) 24=-53(F) 25=-53(F) 26=-53(F) 27=-53(F) 28=-50(F) 29=-50(F) 30=-9(F) 32=-132 33=-132 34=-122(F) 35=-23(F) 36=-23(F) 37=-23(F) 38=-23(F) 39=-23(F) 40=-23(F) 41=-23(F) 42=-23(F) 43=-23(F) 44=-18(F) 45=-25(F) 46=-86(F) 47=-89(F)

Job	Truss	Truss Type	Qty	Ply	Jason Price / Campbell Pointe Bldg. 25
J0918-4429	A02	HIP	1	1	E12341602
					Job Reference (optional)

Comtech, Inc., Fayetteville, NC 28309

8.130 s Mar 11 2018 MiTek Industries, Inc. Mon Oct 22 15:13:12 2018 Page 1
ID:ZzXTyMvxB55ZLn?FA7qN0rzLZck-5ay0hBXIV?J9_QwNxHnjJU5Nq3DSs1i91IOU7nyQq4b

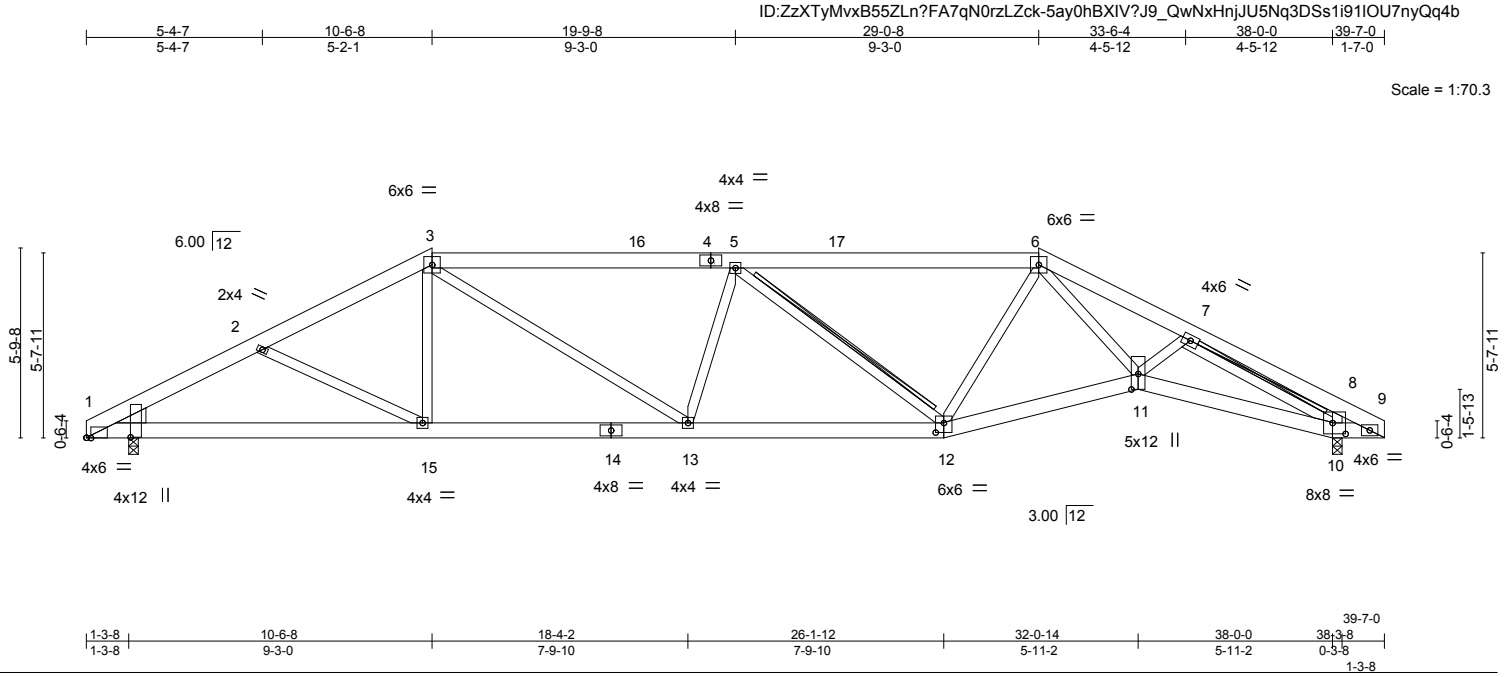

Plate Offsets (X,Y)-- [1:0-0-2,1-4-2], [1:0-1-10,Edge], [8:0-1-12,0-0-14], [10:0-4-12,0-4-0], [11:0-5-11,0-2-8], [12:0-3-0,0-3-8]

LOADING (psf)		SPACING- 2-0-0		CSI.		DEFL.	in	(loc)	l/defl	L/d	PLATES	GRIP
TCLL	20.0	Plate Grip DOL	1.15	TC	0.85	Vert(LL)	-0.14	13	>999	360	MT20	244/190
TCDL	10.0	Lumber DOL	1.15	BC	0.62	Vert(TL)	-0.37	12-13	>999	240		
BCLL	0.0 *	Rep Stress Incr	YES	WB	0.71	Horz(TL)	0.17	10	n/a	n/a		
BCDL	10.0	Code IRC2009/TPI2007		Matrix-S		Wind(LL)	0.11	13	>999	240	Weight: 269 lb	FT = 20%

LUMBER-
TOP CHORD 2x6 SP No.1
BOT CHORD 2x6 SP No.1
WEBS 2x4 SP No.3
WEDGE
Left: 2x6 SP No.1

BRACING-
TOP CHORD Structural wood sheathing directly applied or 3-11-3 oc purlins.
BOT CHORD Rigid ceiling directly applied or 8-7-7 oc bracing.
WEBS T-Brace: 2x4 SPF No.2 - 5-12, 7-10
Fasten (2X) T and I braces to narrow edge of web with 10d (0.131"x3") nails, 6in o.c.,with 3in minimum end distance.
Brace must cover 90% of web length.

REACTIONS. (lb/size) 10=1643/0-3-8, 1=1512/0-3-8
Max Horz 1=-67(LC 4)
Max Uplift 10=-114(LC 7), 1=-83(LC 5)

FORCES. (lb) - Max. Comp./Max. Ten. - All forces 250 (lb) or less except when shown.
TOP CHORD 1-2=-2845/988, 2-3=-2560/846, 3-5=-2783/961, 5-6=-2312/814, 6-7=-3522/1121, 7-8=-759/241, 8-9=-633/135
BOT CHORD 1-15=-801/2482, 13-15=-547/2233, 12-13=-744/2844, 11-12=-592/2373, 10-11=-839/2932, 9-10=-153/681
WEBS 2-15=-272/282, 3-15=-27/440, 3-13=-177/765, 5-13=-297/187, 5-12=-757/254, 6-11=-361/1366, 7-11=-31/496, 7-10=-2768/870, 8-10=-593/302

NOTES-
1) Unbalanced roof live loads have been considered for this design.
2) Wind: ASCE 7-05; 100mph; TCDL=6.0psf; BCDL=5.0psf; h=15ft; Cat. II; Exp C; enclosed; MWFRS (low-rise) and C-C Exterior(2) 0-1-12 to 16-9-3, Interior(1) 16-9-3 to 22-9-13, Exterior(2) 22-9-13 to 29-0-8 zone; cantilever left and right exposed ;C-C for members and forces & MWFRS for reactions shown; Lumber DOL=1.60 plate grip DOL=1.60
3) Provide adequate drainage to prevent water ponding.
4) This truss has been designed for a 10.0 psf bottom chord live load nonconcurrent with any other live loads.
5) * This truss has been designed for a live load of 20.0psf on the bottom chord in all areas with a clearance greater than 6-0-0 between the bottom chord and any other members.
6) Provide mechanical connection (by others) of truss to bearing plate capable of withstanding 100 lb uplift at joint(s) 1 except (jt=lb) 10=114.
7) Warning: Additional permanent and stability bracing for truss system (not part of this component design) is always required.

October 22,2018

ENGINEERING BY TRENCO A MiTek Affiliate
818 Soundside Road
Edenton, NC 27932

Job	Truss	Truss Type	Qty	Ply	Jason Price / Campbell Pointe Bldg. 25
J0918-4429	A03	HIP	1	1	E12341603
					Job Reference (optional)

Comtech, Inc., Fayetteville, NC 28309 — 8.130 s Mar 11 2018 MiTek Industries, Inc. Mon Oct 22 15:13:13 2018 Page 1

ID:ZzXTyMvxB55ZLn?FA7qN0rzLZck-ZnWOvXYxGJR?caVZV?IzrhdZ4TYzbVRJGP82fDyQq4a

6-8-7	13-2-8	19-9-8	26-4-8	32-2-4	38-0-0	39-7-0
6-8-7	6-6-1	6-7-0	6-7-0	5-9-12	5-9-12	1-7-0

Scale = 1:69.0

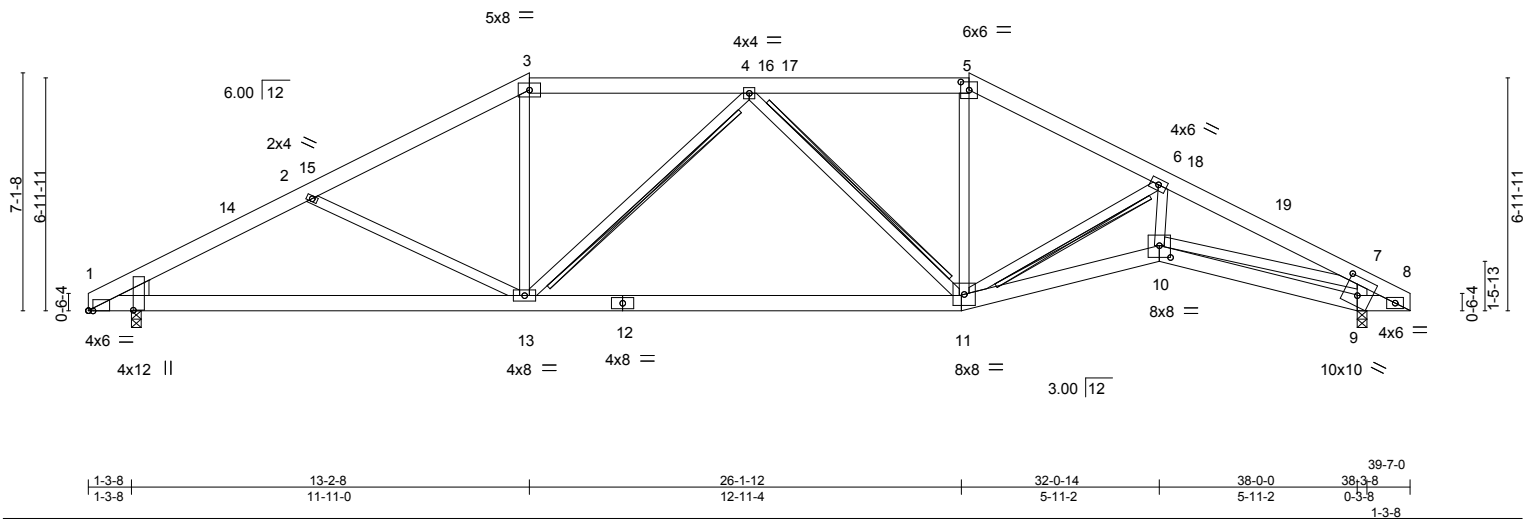

1-3-8	13-2-8	26-1-12	32-0-14	38-0-0	39-7-0
1-3-8	11-11-0	12-11-4	5-11-2	5-11-2	38-3-8 / 0-3-8 / 1-3-8

Plate Offsets (X,Y)-- [1:0-0-2,1-4-2], [1:0-1-10,Edge], [5:0-3-0,0-2-15], [9:0-5-0,0-6-6], [10:0-4-0,0-4-4]

LOADING (psf)		SPACING- 2-0-0		CSI.		DEFL.	in	(loc)	l/defl	L/d	PLATES	GRIP
TCLL	20.0	Plate Grip DOL	1.15	TC	0.82	Vert(LL)	-0.19	11-13	>999	360	MT20	244/190
TCDL	10.0	Lumber DOL	1.15	BC	0.66	Vert(TL)	-0.58	11-13	>790	240		
BCLL	0.0 *	Rep Stress Incr	YES	WB	0.68	Horz(TL)	0.18	9	n/a	n/a		
BCDL	10.0	Code IRC2009/TPI2007		Matrix-S		Wind(LL)	0.11	10-11	>999	240	Weight: 273 lb	FT = 20%

LUMBER-

TOP CHORD 2x6 SP No.1
BOT CHORD 2x6 SP No.1
WEBS 2x4 SP No.3 *Except*
7-10: 2x4 SP No.2
WEDGE
Left: 2x6 SP No.1

BRACING-

TOP CHORD Structural wood sheathing directly applied or 3-9-14 oc purlins.
BOT CHORD Rigid ceiling directly applied or 8-2-7 oc bracing.
WEBS T-Brace: 2x4 SPF No.2 - 4-13, 4-11, 6-11
Fasten (2X) T and I braces to narrow edge of web with 10d (0.131"x3") nails, 6in o.c.,with 3in minimum end distance.
Brace must cover 90% of web length.

REACTIONS. (lb/size) 9=1643/0-3-8, 1=1512/0-3-8
Max Horz 1=-84(LC 4)
Max Uplift 9=-135(LC 7), 1=-89(LC 6)

FORCES. (lb) - Max. Comp./Max. Ten. - All forces 250 (lb) or less except when shown.
TOP CHORD 1-2=-2793/970, 2-3=-2373/794, 3-4=-2032/772, 4-5=-1903/755, 5-6=-2139/770, 6-7=-3661/1125, 7-8=-680/163
BOT CHORD 1-13=-774/2436, 11-13=-575/2191, 10-11=-924/3345, 9-10=-70/440, 8-9=-180/720
WEBS 2-13=-443/351, 3-13=-120/674, 4-13=-363/171, 4-11=-523/194, 5-11=-113/545, 6-11=-1597/534, 6-10=-261/1277, 7-10=-814/2761, 7-9=-1531/597

NOTES-

1) Unbalanced roof live loads have been considered for this design.
2) Wind: ASCE 7-05; 100mph; TCDL=6.0psf; BCDL=5.0psf; h=15ft; Cat. II; Exp C; enclosed; MWFRS (low-rise) and C-C Exterior(2) 0-1-12 to 4-6-9, Interior(1) 4-6-9 to 6-11-13, Exterior(2) 6-11-13 to 13-2-8, Interior(1) 19-5-3 to 20-1-13, Exterior(2) 26-4-8 to 39-7-0 zone; cantilever left and right exposed ;C-C for members and forces & MWFRS for reactions shown; Lumber DOL=1.60 plate grip DOL=1.60
3) Provide adequate drainage to prevent water ponding.
4) This truss has been designed for a 10.0 psf bottom chord live load nonconcurrent with any other live loads.
5) * This truss has been designed for a live load of 20.0psf on the bottom chord in all areas with a clearance greater than 6-0-0 between the bottom chord and any other members.
6) Provide mechanical connection (by others) of truss to bearing plate capable of withstanding 100 lb uplift at joint(s) 1 except (jt=lb) 9=135.
7) Warning: Additional permanent and stability bracing for truss system (not part of this component design) is always required.

October 22,2018

ENGINEERING BY TRENCO A MiTek Affiliate
818 Soundside Road
Edenton, NC 27932

Job	Truss	Truss Type	Qty	Ply	Jason Price / Campbell Pointe Bldg. 25
J0918-4429	A04	HIP	1	1	E12341604 Job Reference (optional)

Comtech, Inc., Fayetteville, NC 28309 — 8.130 s Mar 11 2018 MiTek Industries, Inc. Mon Oct 22 15:13:13 2018 Page 1

ID:ZzXTyMvxB55ZLn?FA7qN0rzLZck-ZnWOvXYxGJR?caVZV?IzrhdWXTV0bStJGP82fDyQq4a

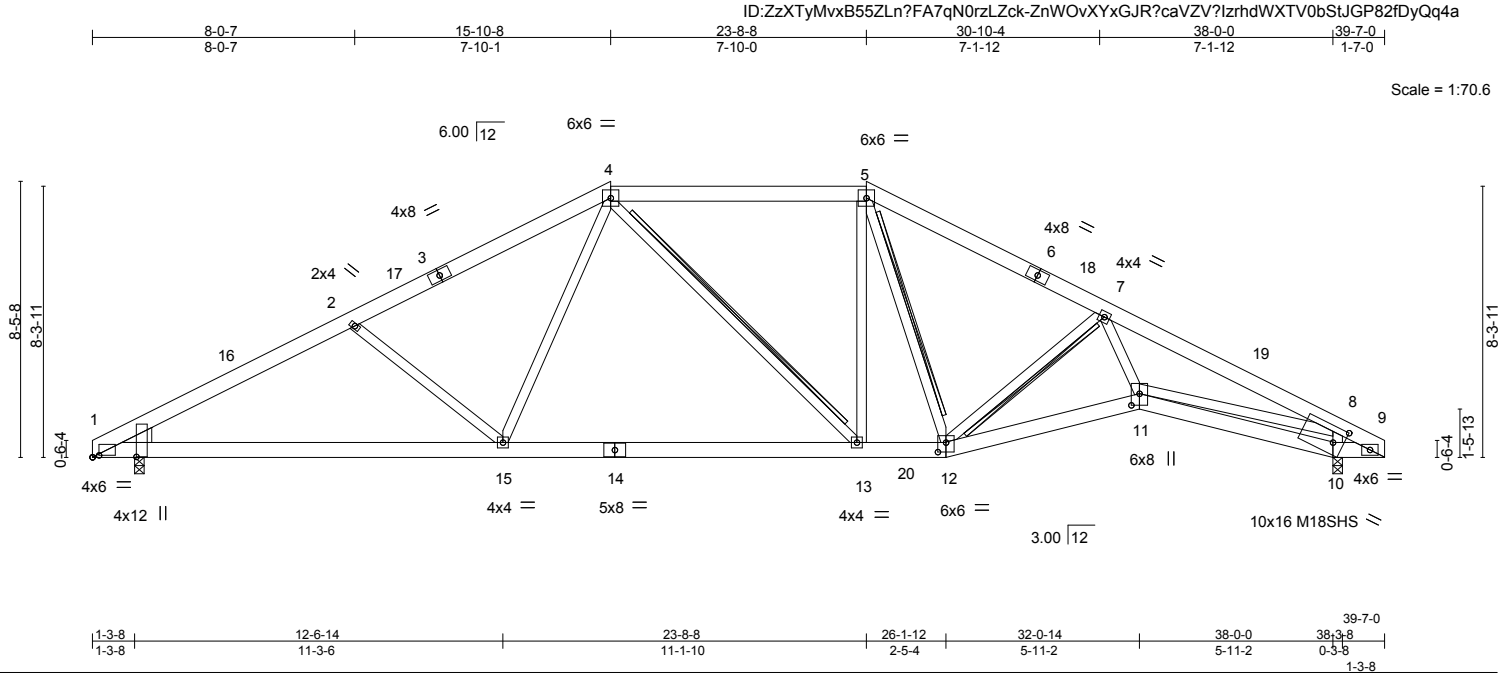

Plate Offsets (X,Y)-- [1:0-0-2,1-4-2], [1:0-2-6,0-0-11], [10:0-3-12,0-5-12], [11:0-4-4,0-3-0], [12:0-3-0,0-3-8]

LOADING (psf)		SPACING- 2-0-0		CSI.		DEFL.	in	(loc)	l/defl	L/d	PLATES	GRIP
TCLL	20.0	Plate Grip DOL	1.15	TC	0.98	Vert(LL)	-0.33	13-15	>999	360	MT20	244/190
TCDL	10.0	Lumber DOL	1.15	BC	0.85	Vert(TL)	-0.55	13-15	>831	240	M18SHS	244/190
BCLL	0.0 *	Rep Stress Incr	YES	WB	0.84	Horz(TL)	0.18	10	n/a	n/a		
BCDL	10.0	Code IRC2009/TPI2007		Matrix-S		Wind(LL)	0.10	11-12	>999	240	Weight: 280 lb	FT = 20%

LUMBER-

TOP CHORD 2x6 SP No.1
BOT CHORD 2x6 SP No.1
WEBS 2x4 SP No.3 *Except*
4-13,8-11: 2x4 SP No.2
WEDGE
Left: 2x6 SP No.1

BRACING-

TOP CHORD Structural wood sheathing directly applied or 3-5-3 oc purlins.
BOT CHORD Rigid ceiling directly applied or 9-1-8 oc bracing.
WEBS T-Brace: 2x4 SPF No.2 - 4-13, 7-12, 5-12
Fasten (2X) T and I braces to narrow edge of web with 10d (0.131"x3") nails, 6in o.c.,with 3in minimum end distance.
Brace must cover 90% of web length.

REACTIONS. (lb/size) 10=1910/0-3-8, 1=1773/0-3-8
Max Horz 1=-102(LC 4)
Max Uplift 10=-152(LC 7), 1=-106(LC 6)

FORCES. (lb) - Max. Comp./Max. Ten. - All forces 250 (lb) or less except when shown.

TOP CHORD 1-2=-3341/890, 2-4=-2970/794, 4-5=-2260/717, 5-7=-2623/756, 7-8=-4437/1042, 8-9=-760/153
BOT CHORD 1-15=-687/2912, 13-15=-381/2235, 12-13=-353/2249, 11-12=-748/3459, 10-11=-65/472, 9-10=-170/798
WEBS 2-15=-462/348, 4-15=-102/850, 5-13=0/676, 7-12=-1432/447, 7-11=-214/1490, 8-11=-738/3428, 8-10=-1782/572

NOTES-

1) Unbalanced roof live loads have been considered for this design.
2) Wind: ASCE 7-05; 100mph; TCDL=6.0psf; BCDL=5.0psf; h=15ft; Cat. II; Exp C; enclosed; MWFRS (low-rise) and C-C Exterior(2) 0-1-12 to 4-6-9, Interior(1) 4-6-9 to 9-7-13, Exterior(2) 9-7-13 to 29-11-3, Interior(1) 29-11-3 to 35-2-3 zone; cantilever left and right exposed ;C-C for members and forces & MWFRS for reactions shown; Lumber DOL=1.60 plate grip DOL=1.60
3) Provide adequate drainage to prevent water ponding.
4) All plates are MT20 plates unless otherwise indicated.
5) This truss has been designed for a 10.0 psf bottom chord live load nonconcurrent with any other live loads.
6) * This truss has been designed for a live load of 20.0psf on the bottom chord in all areas with a clearance greater than 6-0-0 between the bottom chord and any other members, with BCDL = 10.0psf.
7) Provide mechanical connection (by others) of truss to bearing plate capable of withstanding 100 lb uplift at joint(s) except (jt=lb) 10=152, 1=106.
8) Warning: Additional permanent and stability bracing for truss system (not part of this component design) is always required.

NORTH CAROLINA PROFESSIONAL SEAL 28677 ENGINEER JOHN L. GALINSKI

October 22,2018

ENGINEERING BY TRENCO A MiTek Affiliate
818 Soundside Road
Edenton, NC 27932

Job	Truss	Truss Type	Qty	Ply	Jason Price / Campbell Pointe Bldg. 25
J0918-4429	A05	HIP	1	1	E12341605 Job Reference (optional)

Comtech, Inc., Fayetteville, NC 28309 — 8.130 s Mar 11 2018 MiTek Industries, Inc. Mon Oct 22 15:13:14 2018 Page 1

ID:ZzXTyMvxB55ZLn?FA7qN0rzLZck-1z4m6tZZ1cZsEk3m2ipCOvAhdtpEKunSV3tbCgyQq4Z

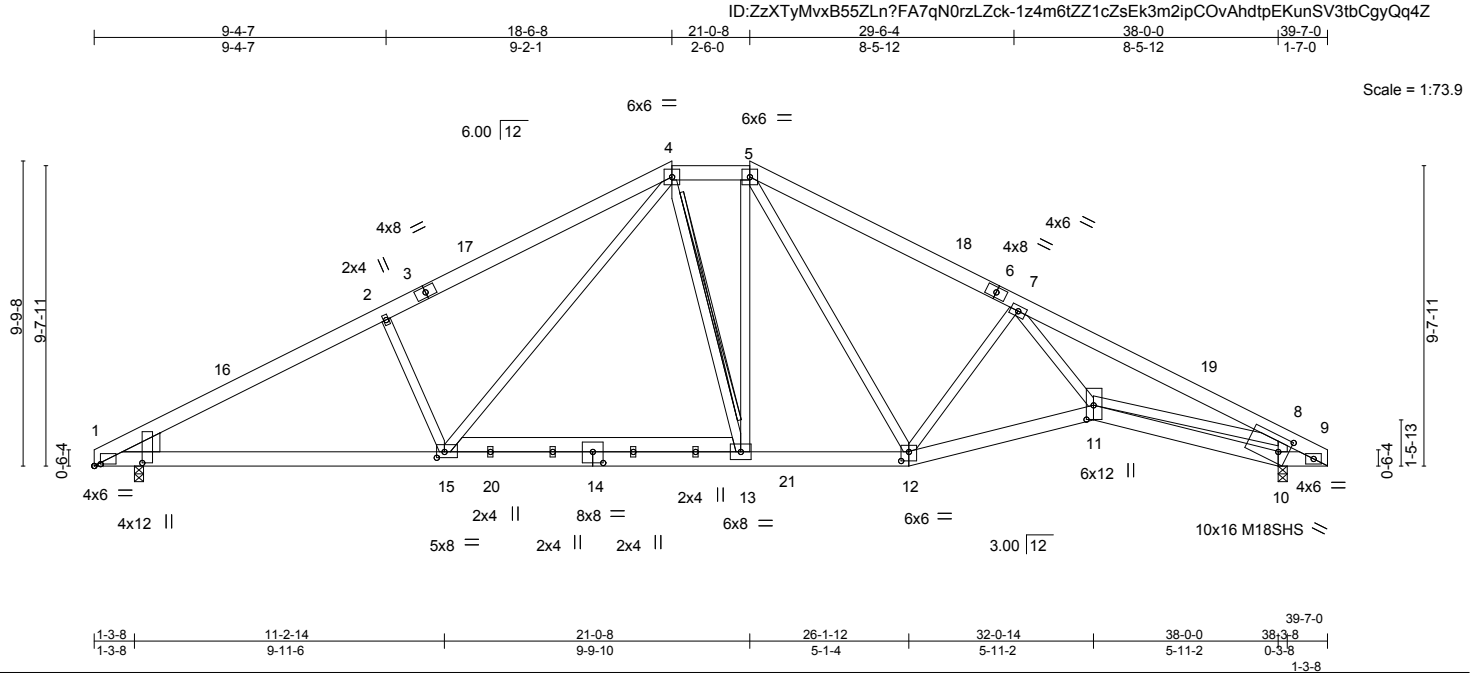

Plate Offsets (X,Y)-- [1:0-1-2,1-6-7], [1:0-2-6,0-0-11], [10:0-3-12,0-5-12], [11:0-5-8,0-2-12], [12:0-3-0,0-3-8], [14:0-4-0,0-4-4], [15:0-3-0,0-2-4]

LOADING (psf)		SPACING- 2-0-0		CSI.		DEFL. in (loc) l/defl L/d		PLATES	GRIP
TCLL	20.0	Plate Grip DOL	1.15	TC	0.96	Vert(LL) -0.35 13-15 >999 360		MT20	244/190
TCDL	10.0	Lumber DOL	1.15	BC	0.98	Vert(TL) -0.55 13-15 >833 240		M18SHS	244/190
BCLL	0.0 *	Rep Stress Incr	YES	WB	0.93	Horz(TL) 0.19 10 n/a n/a			
BCDL	10.0	Code IRC2009/TPI2007		Matrix-S		Wind(LL) 0.09 11-12 >999 240		Weight: 312 lb	FT = 20%

LUMBER-

TOP CHORD 2x6 SP No.1
BOT CHORD 2x6 SP No.1
WEBS 2x4 SP No.3 *Except*
4-15,8-11,5-12: 2x4 SP No.2, 13-15: 2x6 SP No.1
WEDGE
Left: 2x8 SP No.1

BRACING-

TOP CHORD Structural wood sheathing directly applied or 3-3-0 oc purlins.
BOT CHORD Rigid ceiling directly applied or 10-0-0 oc bracing.
WEBS T-Brace: 2x4 SPF No.2 - 4-13
Fasten (2X) T and I braces to narrow edge of web with 10d (0.131"x3") nails, 6in o.c.,with 3in minimum end distance. Brace must cover 90% of web length.

REACTIONS. (lb/size) 10=2068/0-3-8, 1=1956/0-3-8
Max Horz 1=-119(LC 4)
Max Uplift 10=-167(LC 7), 1=-120(LC 6)

FORCES. (lb) - Max. Comp./Max. Ten. - All forces 250 (lb) or less except when shown.

TOP CHORD 1-2=-3725/793, 2-4=-3537/867, 4-5=-2306/667, 5-7=-2941/750, 7-8=-4863/937, 8-9=-817/163
BOT CHORD 1-15=-586/3245, 13-15=-267/2257, 12-13=-255/2298, 11-12=-601/3368, 10-11=-86/499, 9-10=-187/853
WEBS 2-15=-519/365, 4-15=-286/1283, 4-13=-56/426, 5-13=-39/682, 7-12=-1270/415, 7-11=-194/1720, 8-11=-611/3779, 8-10=-1928/557, 5-12=-173/512

NOTES-

1) Unbalanced roof live loads have been considered for this design.
2) Wind: ASCE 7-05; 100mph; TCDL=6.0psf; BCDL=5.0psf; h=15ft; Cat. II; Exp C; enclosed; MWFRS (low-rise) and C-C Exterior(2) 0-1-12 to 4-6-9, Interior(1) 4-6-9 to 12-3-13, Exterior(2) 12-3-13 to 27-3-3, Interior(1) 27-3-3 to 35-2-3 zone; cantilever left and right exposed ;C-C for members and forces & MWFRS for reactions shown; Lumber DOL=1.60 plate grip DOL=1.60
3) Provide adequate drainage to prevent water ponding.
4) All plates are MT20 plates unless otherwise indicated.
5) This truss has been designed for a 10.0 psf bottom chord live load nonconcurrent with any other live loads.
6) * This truss has been designed for a live load of 30.0psf on the bottom chord in all areas with a clearance greater than 6-0-0 between the bottom chord and any other members, with BCDL = 10.0psf.
7) Provide mechanical connection (by others) of truss to bearing plate capable of withstanding 100 lb uplift at joint(s) except (jt=lb) 10=167, 1=120.
8) Warning: Additional permanent and stability bracing for truss system (not part of this component design) is always required.

NORTH CAROLINA PROFESSIONAL SEAL 28677 ENGINEER JOHN L. GALINSKI

October 22,2018

ENGINEERING BY TRENCO A MiTek Affiliate
818 Soundside Road
Edenton, NC 27932

Job	Truss	Truss Type	Qty	Ply	Jason Price / Campbell Pointe Bldg. 25
J0918-4429	A06	ROOF SPECIAL	23	1	E12341606 Job Reference (optional)

Comtech, Inc., Fayetteville, NC 28309 — 8.130 s Mar 11 2018 MiTek Industries, Inc. Mon Oct 22 15:13:15 2018 Page 1

ID:ZzXTyMvxB55ZLn?FA7qN0rzLZck-V9e9KDaBowijrueycQKRw6jtsHC03Mackjd8k6yQq4Y

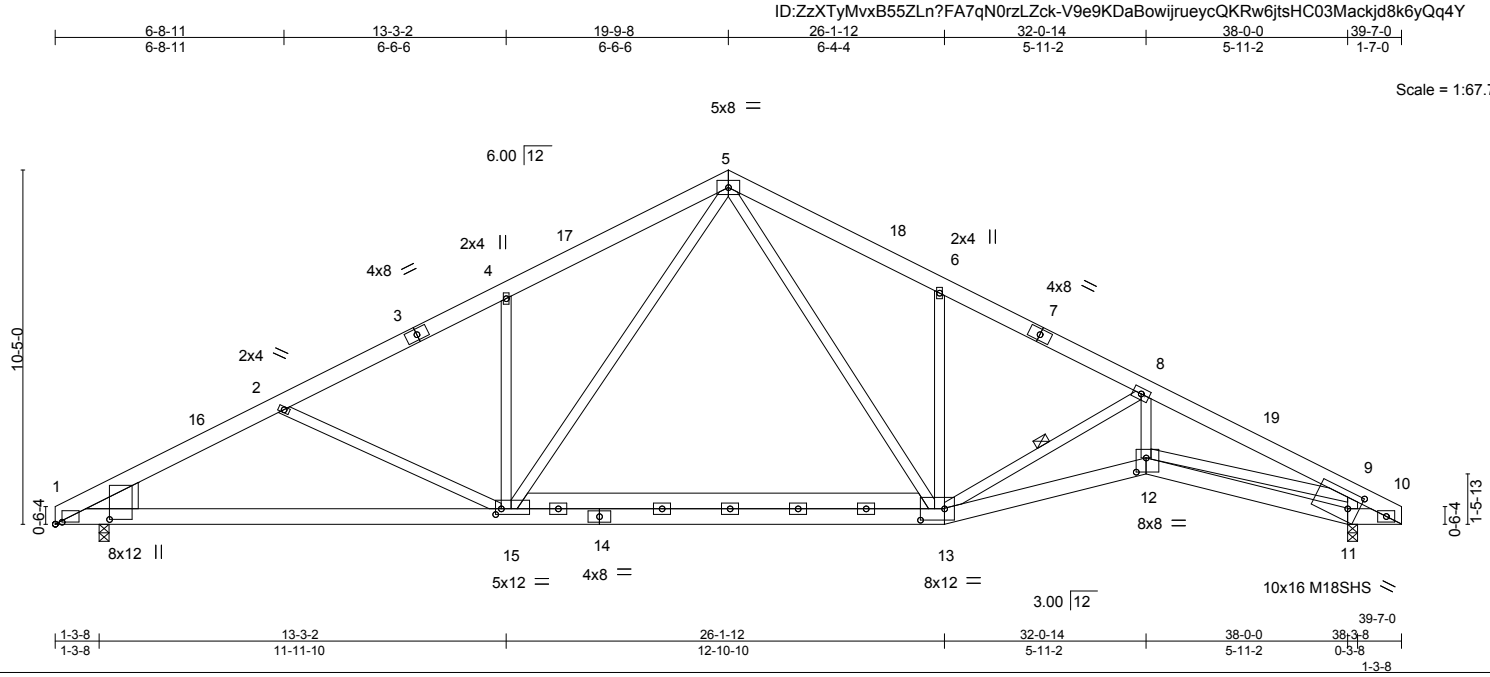

Plate Offsets (X,Y)-- [1:0-1-10,1-7-2], [1:0-2-6,0-0-11], [11:0-3-12,0-5-12], [12:0-3-8,0-5-0], [13:0-8-8,0-4-0], [15:0-2-0,0-2-0]

LOADING (psf)		SPACING- 2-0-0		CSI.		DEFL.	in	(loc)	l/defl	L/d	PLATES	GRIP
TCLL	20.0	Plate Grip DOL	1.15	TC	0.93	Vert(LL)	-0.39	13-15	>999	360	MT20	244/190
TCDL	10.0	Lumber DOL	1.15	BC	0.75	Vert(TL)	-0.62	13-15	>735	240	M18SHS	244/190
BCLL	0.0 *	Rep Stress Incr	YES	WB	0.89	Horz(TL)	0.20	11	n/a	n/a		
BCDL	10.0	Code IRC2009/TPI2007		Matrix-S		Wind(LL)	0.10	12-13	>999	240	Weight: 318 lb	FT = 20%

LUMBER-

TOP CHORD 2x6 SP No.1
BOT CHORD 2x6 SP No.1
WEBS 2x4 SP No.3 *Except*
5-15,5-13,9-12: 2x4 SP No.2, 13-15: 2x6 SP No.1
WEDGE
Left: 2x10 SP No.1

BRACING-

TOP CHORD Structural wood sheathing directly applied or 3-2-12 oc purlins.
BOT CHORD Rigid ceiling directly applied or 9-11-7 oc bracing.
WEBS 1 Row at midpt 8-13

REACTIONS. (lb/size) 11=2042/0-3-8, 1=1883/0-3-8
Max Horz 1=-128(LC 4)
Max Uplift 11=-173(LC 7), 1=-125(LC 6)

FORCES. (lb) - Max. Comp./Max. Ten. - All forces 250 (lb) or less except when shown.

TOP CHORD 1-2=-3733/775, 2-4=-3305/633, 4-5=-3299/779, 5-6=-3094/772, 6-8=-3033/621, 8-9=-4762/830, 9-10=-855/129
BOT CHORD 1-15=-597/3270, 13-15=-182/1980, 12-13=-629/4232, 11-12=-56/547, 10-11=-148/899
WEBS 2-15=-436/283, 4-15=-412/254, 5-15=-274/1613, 5-13=-262/1321, 6-13=-448/253, 8-13=-1711/337, 8-12=-136/1414, 9-12=-562/3636, 9-11=-1907/507

NOTES-

1) Unbalanced roof live loads have been considered for this design.
2) Wind: ASCE 7-05; 100mph; TCDL=6.0psf; BCDL=5.0psf; h=15ft; Cat. II; Exp C; enclosed; MWFRS (low-rise) and C-C Exterior(2) 0-1-12 to 4-6-9, Interior(1) 4-6-9 to 15-4-11, Exterior(2) 15-4-11 to 19-9-8, Interior(1) 24-2-5 to 35-2-3 zone; cantilever left and right exposed ;C-C for members and forces & MWFRS for reactions shown; Lumber DOL=1.60 plate grip DOL=1.60
3) All plates are MT20 plates unless otherwise indicated.
4) All plates are 4x6 MT20 unless otherwise indicated.
5) This truss has been designed for a 10.0 psf bottom chord live load nonconcurrent with any other live loads.
6) * This truss has been designed for a live load of 30.0psf on the bottom chord in all areas with a clearance greater than 6-0-0 between the bottom chord and any other members, with BCDL = 10.0psf.
7) Provide mechanical connection (by others) of truss to bearing plate capable of withstanding 100 lb uplift at joint(s) except (jt=lb) 11=173, 1=125.

October 22,2018

ENGINEERING BY TRENCO A MiTek Affiliate
818 Soundside Road
Edenton, NC 27932

Job	Truss	Truss Type	Qty	Ply	Jason Price / Campbell Pointe Bldg. 25
J0918-4429	A08	ROOF SPECIAL SUPPORT	3	1	E12341607 Job Reference (optional)

Comtech, Inc., Fayetteville, NC 28309 — 8.130 s Mar 11 2018 MiTek Industries, Inc. Mon Oct 22 15:13:16 2018 Page 1

ID:ZzXTyMvxB55ZLn?FA7qN0rzLZck-_MCXXZapZEqaT2D8A7sgTKFElhi_o_JlyNMiGYyQq4X

19-9-8 | 38-3-8
19-9-8 | 18-6-0

Scale = 1:68.1

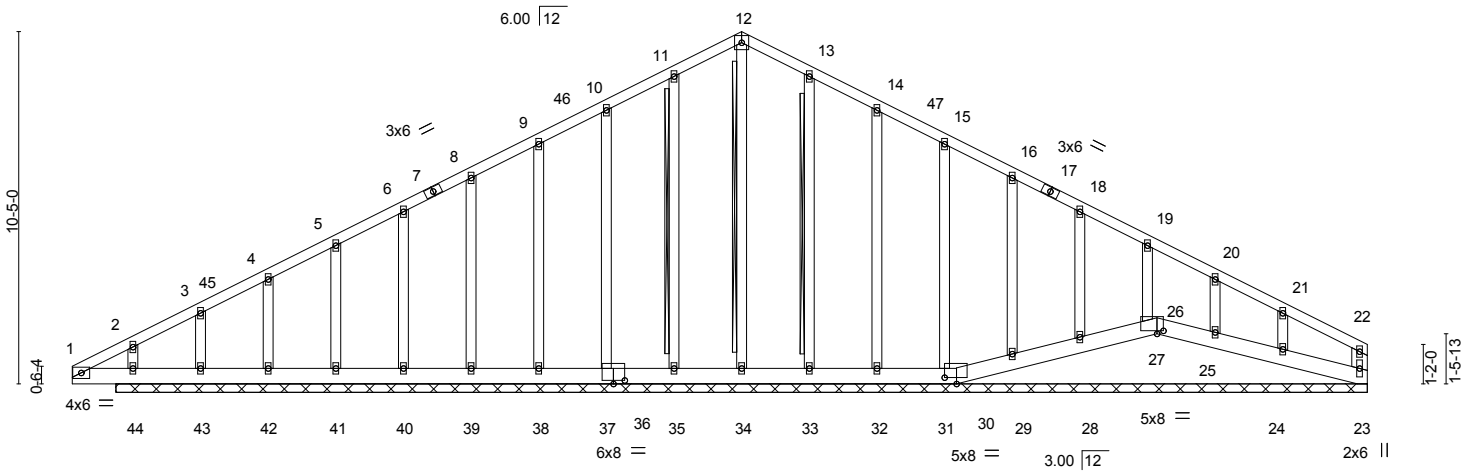

Plate Offsets (X,Y)-- [26:0-0-0,0-2-13], [26:0-2-4,0-1-1], [27:0-1-12,0-0-7], [30:0-0-0,0-2-12], [30:0-4-4,0-2-4], [31:0-1-12,0-0-0], [36:0-4-0,0-1-4], [36:0-0-0,0-2-12], [37:0-1-12 ,0-0-0]

LOADING (psf)		SPACING-	2-0-0	CSI.		DEFL.	in	(loc)	l/defl	L/d	PLATES	GRIP
TCLL	20.0	Plate Grip DOL	1.15	TC	0.09	Vert(LL)	n/a	-	n/a	999	MT20	244/190
TCDL	10.0	Lumber DOL	1.15	BC	0.07	Vert(TL)	n/a	-	n/a	999		
BCLL	0.0 *	Rep Stress Incr	YES	WB	0.16	Horz(TL)	0.00	23	n/a	n/a		
BCDL	10.0	Code IRC2009/TPI2007		Matrix-S							Weight: 289 lb	FT = 20%

LUMBER-

TOP CHORD	2x4 SP No.1
BOT CHORD	2x6 SP No.1
WEBS	2x6 SP No.1
OTHERS	2x4 SP No.3

BRACING-

TOP CHORD	Structural wood sheathing directly applied or 6-0-0 oc purlins, except end verticals.
BOT CHORD	Rigid ceiling directly applied or 6-0-0 oc bracing.
WEBS	T-Brace: 2x4 SPF No.2 - 12-34, 11-35, 13-33 Fasten (2X) T and I braces to narrow edge of web with 10d (0.131"x3") nails, 6in o.c.,with 3in minimum end distance. Brace must cover 90% of web length.

REACTIONS. All bearings 37-0-0.

(lb) - Max Horz 44=138(LC 5)

Max Uplift All uplift 100 lb or less at joint(s) 23, 30, 26, 35, 37, 38, 39, 40, 41, 42, 44, 33, 32, 31, 29, 28, 27, 25 except 43=-103(LC 6), 24=-107(LC 7)

Max Grav All reactions 250 lb or less at joint(s) 23, 30, 26, 34, 35, 37, 38, 39, 40, 41, 42, 43, 33, 32, 31, 29, 28, 27, 25, 24 except 44=278(LC 1)

FORCES. (lb) - Max. Comp./Max. Ten. - All forces 250 (lb) or less except when shown.

TOP CHORD 9-10=0/301, 10-11=-17/385, 11-12=-20/468, 12-13=-29/468, 13-14=-26/385, 14-15=-26/301

WEBS 12-34=-261/0

NOTES-

1) Unbalanced roof live loads have been considered for this design.
2) Wind: ASCE 7-05; 100mph; TCDL=6.0psf; BCDL=5.0psf; h=15ft; Cat. II; Exp C; enclosed; MWFRS (low-rise) and C-C Corner(3) 0-0-0 to 4-4-13, Exterior(2) 4-4-13 to 15-4-11, Corner(3) 15-4-11 to 19-9-8, Exterior(2) 24-2-5 to 33-7-15 zone; cantilever left exposed ;C-C for members and forces & MWFRS for reactions shown; Lumber DOL=1.60 plate grip DOL=1.60
3) Truss designed for wind loads in the plane of the truss only. For studs exposed to wind (normal to the face), see Standard Industry Gable End Details as applicable, or consult qualified building designer as per ANSI/TPI 1.
4) All plates are 2x4 MT20 unless otherwise indicated.
5) Gable studs spaced at 2-0-0 oc.
6) This truss has been designed for a 10.0 psf bottom chord live load nonconcurrent with any other live loads.
7) * This truss has been designed for a live load of 20.0psf on the bottom chord in all areas with a clearance greater than 6-0-0 between the bottom chord and any other members, with BCDL = 10.0psf.
8) Provide mechanical connection (by others) of truss to bearing plate capable of withstanding 100 lb uplift at joint(s) 23, 30, 26, 35, 37, 38, 39, 40, 41, 42, 44, 33, 32, 31, 29, 28, 27, 25 except (jt=lb) 43=103, 24=107.
9) Non Standard bearing condition. Review required.
10) Warning: Additional permanent and stability bracing for truss system (not part of this component design) is always required.

October 22,2018

ENGINEERING BY TRENCO A MiTek Affiliate
818 Soundside Road
Edenton, NC 27932

Job	Truss	Truss Type	Qty	Ply	Jason Price / Campbell Pointe Bldg. 25
J0918-4429	A09	ROOF SPECIAL SUPPORT	3	1	E12341608 Job Reference (optional)

Comtech, Inc., Fayetteville, NC 28309 — 8.130 s Mar 11 2018 MiTek Industries, Inc. Mon Oct 22 15:13:18 2018 Page 1

ID:ZzXTyMvxB55ZLn?FA7qN0rzLZck-wkKHyEc35r4IiLNXHYu8YlKbfUPxGuB2QhrpLRyQq4V

19-3-8 | 38-7-0
19-3-8 | 19-3-8

Scale = 1:65.6

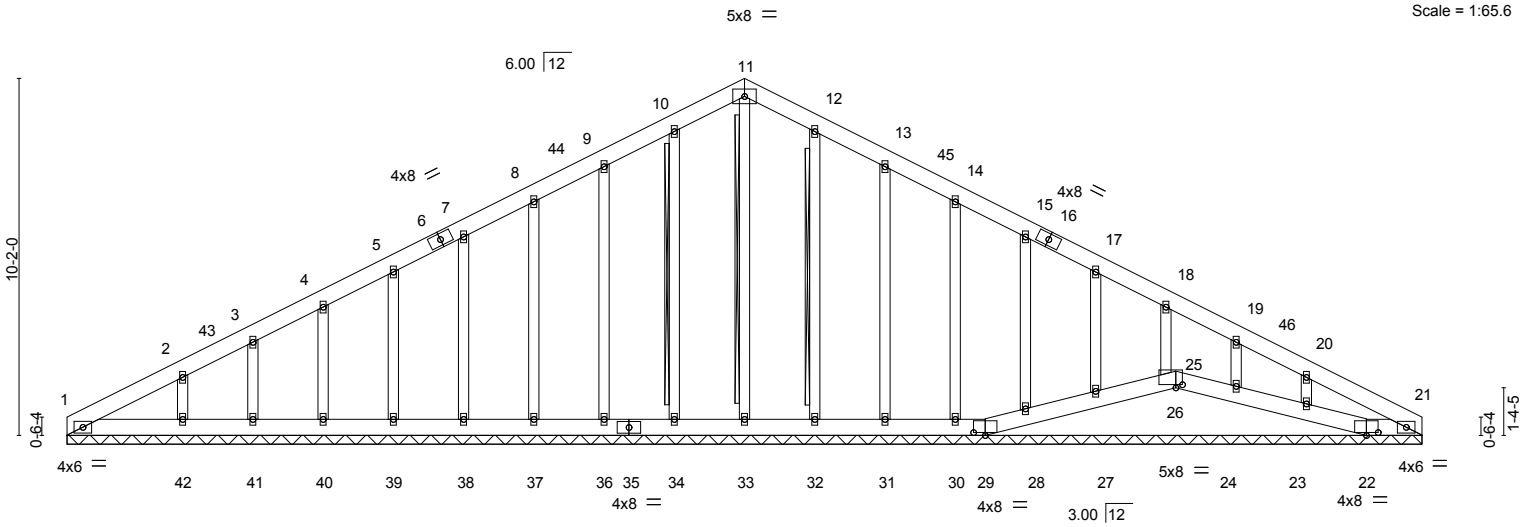

26-1-12 | 31-6-14 | 37-0-0 | 38-7-0
26-1-12 | 5-5-2 | 5-5-2 | 1-7-0

Plate Offsets (X,Y)-- [22:0-4-0,0-1-0], [25:0-2-4,0-1-1], [25:0-0-0,0-2-13], [26:0-1-12,0-0-7], [29:0-4-0,0-1-0]

LOADING (psf)		SPACING- 2-0-0		CSI.		DEFL.	in	(loc)	l/defl	L/d	PLATES	GRIP
TCLL	20.0	Plate Grip DOL	1.15	TC	0.06	Vert(LL)	n/a	-	n/a	999	MT20	244/190
TCDL	10.0	Lumber DOL	1.15	BC	0.04	Vert(TL)	n/a	-	n/a	999		
BCLL	0.0 *	Rep Stress Incr	YES	WB	0.13	Horz(TL)	0.01	21	n/a	n/a		
BCDL	10.0	Code IRC2009/TPI2007		Matrix-S							Weight: 315 lb	FT = 20%

LUMBER-
TOP CHORD 2x6 SP No.1
BOT CHORD 2x6 SP No.1
OTHERS 2x4 SP No.3

BRACING-
TOP CHORD Structural wood sheathing directly applied or 6-0-0 oc purlins.
BOT CHORD Rigid ceiling directly applied or 10-0-0 oc bracing.
WEBS T-Brace: 2x4 SPF No.2 - 11-33, 10-34, 12-32
Fasten (2X) T and I braces to narrow edge of web with 10d (0.131"x3") nails, 6in o.c.,with 3in minimum end distance.
Brace must cover 90% of web length.

REACTIONS. All bearings 38-7-0.
(lb) - Max Horz 1=-124(LC 4)
Max Uplift All uplift 100 lb or less at joint(s) 1, 29, 22, 34, 36, 37, 38, 39, 40, 41, 42, 32, 31, 30, 28, 27, 26, 24, 23
Max Grav All reactions 250 lb or less at joint(s) 1, 29, 25, 22, 21, 33, 34, 36, 37, 38, 39, 40, 41, 32, 31, 30, 28, 27, 26, 24, 23 except 42=265(LC 10)

FORCES. (lb) - Max. Comp./Max. Ten. - All forces 250 (lb) or less except when shown.
TOP CHORD 8-9=-48/251, 9-10=-49/336, 10-11=-49/405, 11-12=-49/405, 12-13=-49/336, 13-14=-48/251
WEBS 2-42=-190/272, 20-23=-185/271

NOTES-
1) Unbalanced roof live loads have been considered for this design.
2) Wind: ASCE 7-05; 100mph; TCDL=6.0psf; BCDL=5.0psf; h=15ft; Cat. II; Exp C; enclosed; MWFRS (low-rise) and C-C Corner(3) 0-0-0 to 4-4-13, Exterior(2) 4-4-13 to 14-10-11, Corner(3) 14-10-11 to 19-3-8, Exterior(2) 23-8-5 to 34-2-3 zone;C-C for members and forces & MWFRS for reactions shown; Lumber DOL=1.60 plate grip DOL=1.60
3) Truss designed for wind loads in the plane of the truss only. For studs exposed to wind (normal to the face), see Standard Industry Gable End Details as applicable, or consult qualified building designer as per ANSI/TPI 1.
4) All plates are 2x4 MT20 unless otherwise indicated.
5) Gable requires continuous bottom chord bearing.
6) Gable studs spaced at 2-0-0 oc.
7) This truss has been designed for a 10.0 psf bottom chord live load nonconcurrent with any other live loads.
8) * This truss has been designed for a live load of 20.0psf on the bottom chord in all areas with a clearance greater than 6-0-0 between the bottom chord and any other members, with BCDL = 10.0psf.
9) Provide mechanical connection (by others) of truss to bearing plate capable of withstanding 100 lb uplift at joint(s) 1, 29, 22, 34, 36, 37, 38, 39, 40, 41, 42, 32, 31, 30, 28, 27, 26, 24, 23.
10) Beveled plate or shim required to provide full bearing surface with truss chord at joint(s) 1, 25, 28, 27, 26, 24, 23.
11) Warning: Additional permanent and stability bracing for truss system (not part of this component design) is always required.

October 22,2018

ENGINEERING BY TRENCO A MiTek Affiliate
818 Soundside Road
Edenton, NC 27932

Job	Truss	Truss Type	Qty	Ply	Jason Price / Campbell Pointe Bldg. 25
J0918-4429	A10	ROOF SPECIAL	23	1	E12341609 Job Reference (optional)

Comtech, Inc., Fayetteville, NC 28309 — 8.130 s Mar 11 2018 MiTek Industries, Inc. Mon Oct 22 15:13:18 2018 Page 1

ID:ZzXTyMvxB55ZLn?FA7qN0rzLZck-wkKHyEc35r4IiLNXHYu8YIKNTUE_Gjn2QhrpLRyQq4V

6-6-11	12-11-2	19-3-8	26-1-12	31-6-14	37-0-0	38-7-0
6-6-11	6-4-6	6-4-6	6-10-4	5-5-2	5-5-2	1-7-0

Scale = 1:64.9

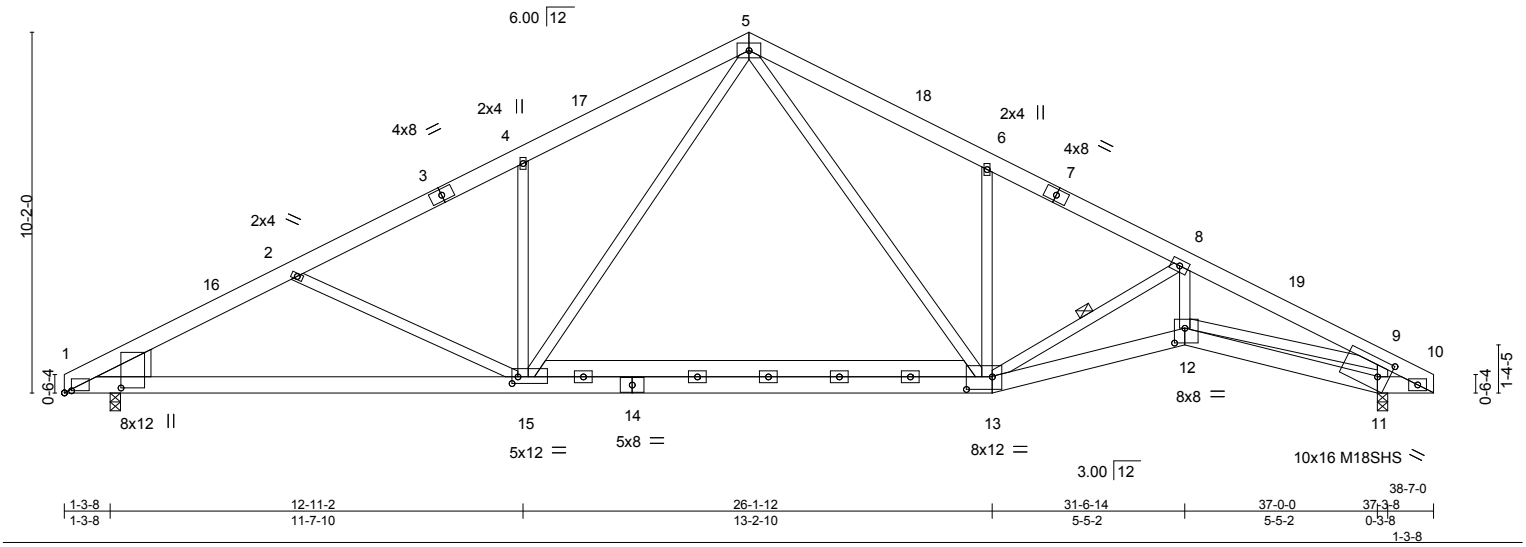

Plate Offsets (X,Y)-- [1:0-1-10,1-7-2], [1:0-2-6,0-0-11], [11:0-3-12,0-5-12], [12:0-3-8,0-5-0], [13:0-8-12,0-4-4], [15:0-2-0,0-2-4]

LOADING (psf)		SPACING- 2-0-0		CSI.		DEFL.	in	(loc)	l/defl	L/d	PLATES	GRIP
TCLL	20.0	Plate Grip DOL	1.15	TC	0.91	Vert(LL)	-0.39	13-15	>999	360	MT20	244/190
TCDL	10.0	Lumber DOL	1.15	BC	0.74	Vert(TL)	-0.61	13-15	>720	240	M18SHS	244/190
BCLL	0.0 *	Rep Stress Incr	YES	WB	0.86	Horz(TL)	0.17	11	n/a	n/a		
BCDL	10.0	Code IRC2009/TPI2007		Matrix-S		Wind(LL)	0.09	12-13	>999	240	Weight: 310 lb	FT = 20%

LUMBER-

TOP CHORD 2x6 SP No.1
BOT CHORD 2x6 SP No.1
WEBS 2x4 SP No.3 *Except*
5-15,5-13,9-12: 2x4 SP No.2, 13-15: 2x6 SP No.1
WEDGE
Left: 2x10 SP No.1

BRACING-

TOP CHORD Structural wood sheathing directly applied or 3-4-2 oc purlins.
BOT CHORD Rigid ceiling directly applied or 10-0-0 oc bracing.
WEBS 1 Row at midpt 8-13

REACTIONS. (lb/size) 11=2019/0-3-8, 1=1845/0-3-8
Max Horz 1=-124(LC 4)
Max Uplift 11=-170(LC 7), 1=-122(LC 6)

FORCES. (lb) - Max. Comp./Max. Ten. - All forces 250 (lb) or less except when shown.

TOP CHORD 1-2=-3665/760, 2-4=-3250/620, 4-5=-3243/762, 5-6=-3122/767, 6-8=-3044/610, 8-9=-4567/789, 9-10=-793/113
BOT CHORD 1-15=-585/3210, 13-15=-181/1939, 12-13=-596/4050, 11-12=-39/481, 10-11=-129/831
WEBS 2-15=-420/278, 4-15=-400/247, 5-15=-263/1604, 5-13=-260/1341, 6-13=-456/259, 8-13=-1494/293, 8-12=-121/1265, 9-12=-546/3520, 9-11=-1874/490

NOTES-

1) Unbalanced roof live loads have been considered for this design.
2) Wind: ASCE 7-05; 100mph; TCDL=6.0psf; BCDL=5.0psf; h=15ft; Cat. II; Exp C; enclosed; MWFRS (low-rise) and C-C Exterior(2) 0-1-12 to 4-6-9, Interior(1) 4-6-9 to 14-10-11, Exterior(2) 14-10-11 to 19-3-8, Interior(1) 23-8-5 to 34-2-3 zone; cantilever left and right exposed ;C-C for members and forces & MWFRS for reactions shown; Lumber DOL=1.60 plate grip DOL=1.60
3) All plates are MT20 plates unless otherwise indicated.
4) All plates are 4x6 MT20 unless otherwise indicated.
5) This truss has been designed for a 10.0 psf bottom chord live load nonconcurrent with any other live loads.
6) * This truss has been designed for a live load of 30.0psf on the bottom chord in all areas with a clearance greater than 6-0-0 between the bottom chord and any other members, with BCDL = 10.0psf.
7) Provide mechanical connection (by others) of truss to bearing plate capable of withstanding 100 lb uplift at joint(s) except (jt=lb) 11=170, 1=122.

NORTH CAROLINA PROFESSIONAL SEAL 28677 ENGINEER JOHN L. GALINSKI

October 22,2018

ENGINEERING BY TRENCO A MiTek Affiliate
818 Soundside Road
Edenton, NC 27932

Job	Truss	Truss Type	Qty	Ply	Jason Price / Campbell Pointe Bldg. 25
J0918-4429	A11	GABLE	1	1	E12341610 Job Reference (optional)

Comtech, Inc., Fayetteville, NC 28309 — 8.130 s Mar 11 2018 MiTek Industries, Inc. Mon Oct 22 15:13:19 2018 Page 1

ID:ZzXTyMvxB55ZLn?FA7qN0rzLZck-Oxtf9adhs8C9KVyjrFPN5ytk5ukv?LPBfLbMttyQq4U

19-3-8 | 38-7-0
19-3-8 | 19-3-8

Scale = 1:65.8

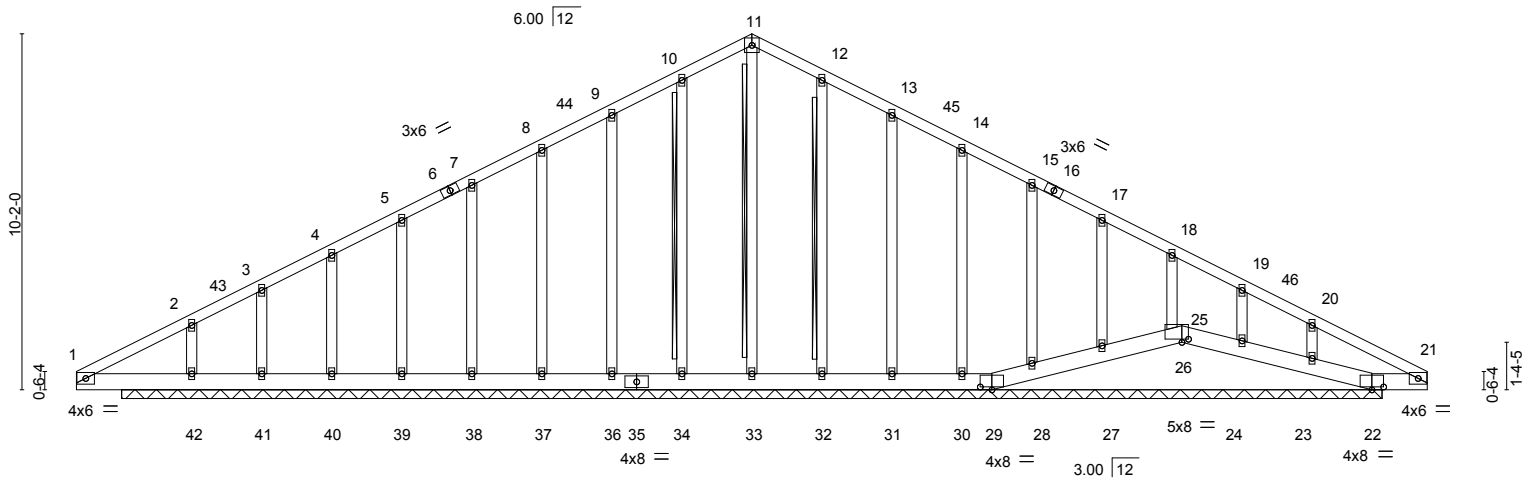

Plate Offsets (X,Y)-- [22:0-4-0,0-1-0], [25:0-2-4,0-1-1], [25:0-0-0,0-2-13], [26:0-1-12,0-0-7], [29:0-4-0,0-1-0]

LOADING (psf)		SPACING- 2-0-0		CSI.		DEFL.	in	(loc)	l/defl	L/d	PLATES	GRIP
TCLL	20.0	Plate Grip DOL	1.15	TC	0.15	Vert(LL)	n/a	-	n/a	999	MT20	244/190
TCDL	10.0	Lumber DOL	1.15	BC	0.12	Vert(TL)	n/a	-	n/a	999		
BCLL	0.0 *	Rep Stress Incr	YES	WB	0.13	Horz(TL)	0.01	22	n/a	n/a		
BCDL	10.0	Code IRC2009/TPI2007		Matrix-S							Weight: 283 lb	FT = 20%

LUMBER-

TOP CHORD 2x4 SP No.1
BOT CHORD 2x6 SP No.1
OTHERS 2x4 SP No.3

BRACING-

TOP CHORD Structural wood sheathing directly applied or 10-0-0 oc purlins.
BOT CHORD Rigid ceiling directly applied or 6-0-0 oc bracing.
WEBS T-Brace: 2x4 SPF No.2 - 11-33, 10-34, 12-32
Fasten (2X) T and I braces to narrow edge of web with 10d (0.131"x3") nails, 6in o.c.,with 3in minimum end distance.
Brace must cover 90% of web length.

REACTIONS. All bearings 36-0-0.
(lb) - Max Horz 42=-126(LC 4)
Max Uplift All uplift 100 lb or less at joint(s) 29, 25, 22, 34, 36, 37, 38, 39, 40, 42, 32, 31, 30, 28, 27, 26, 24, 23 except 41=-100(LC 6)
Max Grav All reactions 250 lb or less at joint(s) 29, 25, 22, 36, 37, 38, 39, 40, 41, 31, 30, 28, 27, 26, 24, 23 except 33=347(LC 1), 34=255(LC 10), 42=414(LC 10), 32=253(LC 1)

FORCES. (lb) - Max. Comp./Max. Ten. - All forces 250 (lb) or less except when shown.
TOP CHORD 9-10=0/330, 10-11=0/415, 11-12=0/415, 12-13=0/330
WEBS 2-42=-216/274, 20-23=-190/279

NOTES-

1) Unbalanced roof live loads have been considered for this design.
2) Wind: ASCE 7-05; 100mph; TCDL=6.0psf; BCDL=5.0psf; h=15ft; Cat. II; Exp C; enclosed; MWFRS (low-rise) and C-C Corner(3) 0-0-0 to 4-4-13, Exterior(2) 4-4-13 to 14-10-11, Corner(3) 14-10-11 to 19-3-8, Exterior(2) 23-8-5 to 34-2-3 zone; cantilever left and right exposed ;C-C for members and forces & MWFRS for reactions shown; Lumber DOL=1.60 plate grip DOL=1.60
3) Truss designed for wind loads in the plane of the truss only. For studs exposed to wind (normal to the face), see Standard Industry Gable End Details as applicable, or consult qualified building designer as per ANSI/TPI 1.
4) All plates are 2x4 MT20 unless otherwise indicated.
5) Gable studs spaced at 2-0-0 oc.
6) This truss has been designed for a 10.0 psf bottom chord live load nonconcurrent with any other live loads.
7) * This truss has been designed for a live load of 20.0psf on the bottom chord in all areas with a clearance greater than 6-0-0 between the bottom chord and any other members, with BCDL = 10.0psf.
8) Provide mechanical connection (by others) of truss to bearing plate capable of withstanding 100 lb uplift at joint(s) 29, 25, 22, 34, 36, 37, 38, 39, 40, 42, 32, 31, 30, 28, 27, 26, 24, 23 except (jt=lb) 41=100.
9) Non Standard bearing condition. Review required.
10) Warning: Additional permanent and stability bracing for truss system (not part of this component design) is always required.

NORTH CAROLINA PROFESSIONAL SEAL 28677 ENGINEER JOHN L. GALINSKI

October 22,2018

ENGINEERING BY TRENCO A MiTek Affiliate
818 Soundside Road
Edenton, NC 27932

Job	Truss	Truss Type	Qty	Ply	Jason Price / Campbell Pointe Bldg. 25
J0918-4429	A12	ROOF SPECIAL SUPPORT	2	1	E12341611 Job Reference (optional)

Comtech, Inc., Fayetteville, NC 28309 — 8.130 s Mar 11 2018 MiTek Industries, Inc. Mon Oct 22 15:13:21 2018 Page 1

ID:ZzXTyMvxB55ZLn?FA7qN0rzLZck-KJ?QaGeyOmStZp66zgRrANy5giQnTFkU6f4TxmyQq4S

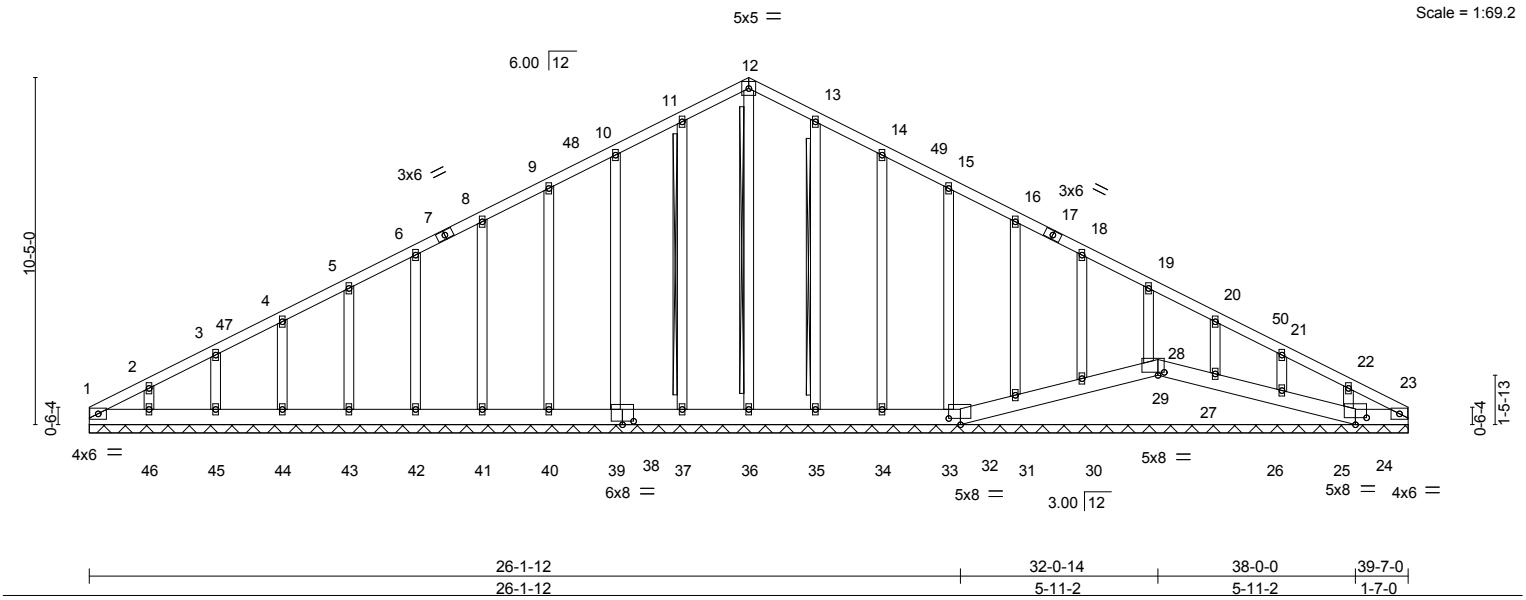

Plate Offsets (X,Y)-- [24:0-0-0,0-2-12], [24:0-4-0,0-2-8], [25:0-1-12,0-0-7], [28:0-0-0,0-2-13], [28:0-2-4,0-1-1], [29:0-1-12,0-0-7], [32:0-0-0,0-2-12], [32:0-4-4,0-2-4], [33:0-1-12,0-0-0], [38:0-4-0,0-1-4], [38:0-0-0,0-2-12], [39:0-1-12,0-0-0]

LOADING (psf)		SPACING-	2-0-0	CSI.		DEFL.	in	(loc)	l/defl	L/d	PLATES	GRIP
TCLL	20.0	Plate Grip DOL	1.15	TC	0.08	Vert(LL)	n/a	-	n/a	999	MT20	244/190
TCDL	10.0	Lumber DOL	1.15	BC	0.03	Vert(TL)	n/a	-	n/a	999		
BCLL	0.0 *	Rep Stress Incr	YES	WB	0.15	Horz(TL)	0.01	23	n/a	n/a		
BCDL	10.0	Code IRC2009/TPI2007		Matrix-S							Weight: 294 lb	FT = 20%

LUMBER-

TOP CHORD 2x4 SP No.1
BOT CHORD 2x6 SP No.1
OTHERS 2x4 SP No.3

BRACING-

TOP CHORD Structural wood sheathing directly applied or 6-0-0 oc purlins.
BOT CHORD Rigid ceiling directly applied or 10-0-0 oc bracing, Except: 6-0-0 oc bracing: 28-29.
WEBS T-Brace: 2x4 SPF No.2 - 12-36, 11-37, 13-35
Fasten (2X) T and I braces to narrow edge of web with 10d (0.131"x3") nails, 6in o.c.,with 3in minimum end distance. Brace must cover 90% of web length.

REACTIONS. All bearings 39-7-0.

(lb) - Max Horz 1=-129(LC 4)
Max Uplift All uplift 100 lb or less at joint(s) 1, 32, 24, 37, 39, 40, 41, 42, 43, 44, 45, 46, 35, 34, 33, 31, 30, 29, 27, 26, 25
Max Grav All reactions 250 lb or less at joint(s) 1, 32, 28, 24, 23, 36, 37, 39, 40, 41, 42, 43, 44, 45, 46, 35, 34, 33, 31, 30, 29, 27, 26, 25

FORCES. (lb) - Max. Comp./Max. Ten. - All forces 250 (lb) or less except when shown.

TOP CHORD 1-2=-253/27, 10-11=-43/312, 11-12=-46/397, 12-13=-46/397, 13-14=-43/312, 22-23=-253/19
BOT CHORD 1-46=0/251, 45-46=0/251, 44-45=0/251, 43-44=0/251, 42-43=0/251, 41-42=0/251, 40-41=0/251, 39-40=0/251, 37-39=0/251, 36-37=0/251, 35-36=0/251, 34-35=0/251, 33-34=0/251, 32-33=0/251, 31-32=-2/262, 30-31=-4/262, 29-30=-5/262, 28-29=-3/256, 27-28=-5/260, 26-27=-5/262, 25-26=-4/262, 24-25=0/266, 23-24=0/251

NOTES-

1) Unbalanced roof live loads have been considered for this design.
2) Wind: ASCE 7-05; 100mph; TCDL=6.0psf; BCDL=5.0psf; h=15ft; Cat. II; Exp C; enclosed; MWFRS (low-rise) and C-C Corner(3) 0-0-0 to 4-4-13, Exterior(2) 4-4-13 to 15-4-11, Corner(3) 15-4-11 to 19-9-8, Exterior(2) 24-2-5 to 35-2-3 zone;C-C for members and forces & MWFRS for reactions shown; Lumber DOL=1.60 plate grip DOL=1.60
3) Truss designed for wind loads in the plane of the truss only. For studs exposed to wind (normal to the face), see Standard Industry Gable End Details as applicable, or consult qualified building designer as per ANSI/TPI 1.
4) All plates are 2x4 MT20 unless otherwise indicated.
5) Gable requires continuous bottom chord bearing.
6) Gable studs spaced at 2-0-0 oc.
7) This truss has been designed for a 10.0 psf bottom chord live load nonconcurrent with any other live loads.
8) * This truss has been designed for a live load of 20.0psf on the bottom chord in all areas with a clearance greater than 6-0-0 between the bottom chord and any other members, with BCDL = 10.0psf.
9) Provide mechanical connection (by others) of truss to bearing plate capable of withstanding 100 lb uplift at joint(s) 1, 32, 24, 37, 39, 40, 41, 42, 43, 44, 45, 46, 35, 34, 33, 31, 30, 29, 27, 26, 25.
10) Beveled plate or shim required to provide full bearing surface with truss chord at joint(s) 1, 28, 31, 30, 29, 27, 26, 25.
11) Warning: Additional permanent and stability bracing for truss system (not part of this component design) is always required.

October 22,2018

ENGINEERING BY TRENCO A MiTek Affiliate
818 Soundside Road
Edenton, NC 27932

Job	Truss	Truss Type	Qty	Ply	Jason Price / Campbell Pointe Bldg. 25
J0918-4429	A13	ROOF SPECIAL SUPPORT	1	1	E12341612 Job Reference (optional)

Comtech, Inc., Fayetteville, NC 28309 — 8.130 s Mar 11 2018 MiTek Industries, Inc. Mon Oct 22 15:13:22 2018 Page 1

ID:ZzXTyMvxB55ZLn?FA7qN0rzLZck-oWZoocfa83akBzhIWOy4jbVGK5mXCi7eLJp0UCyQq4R

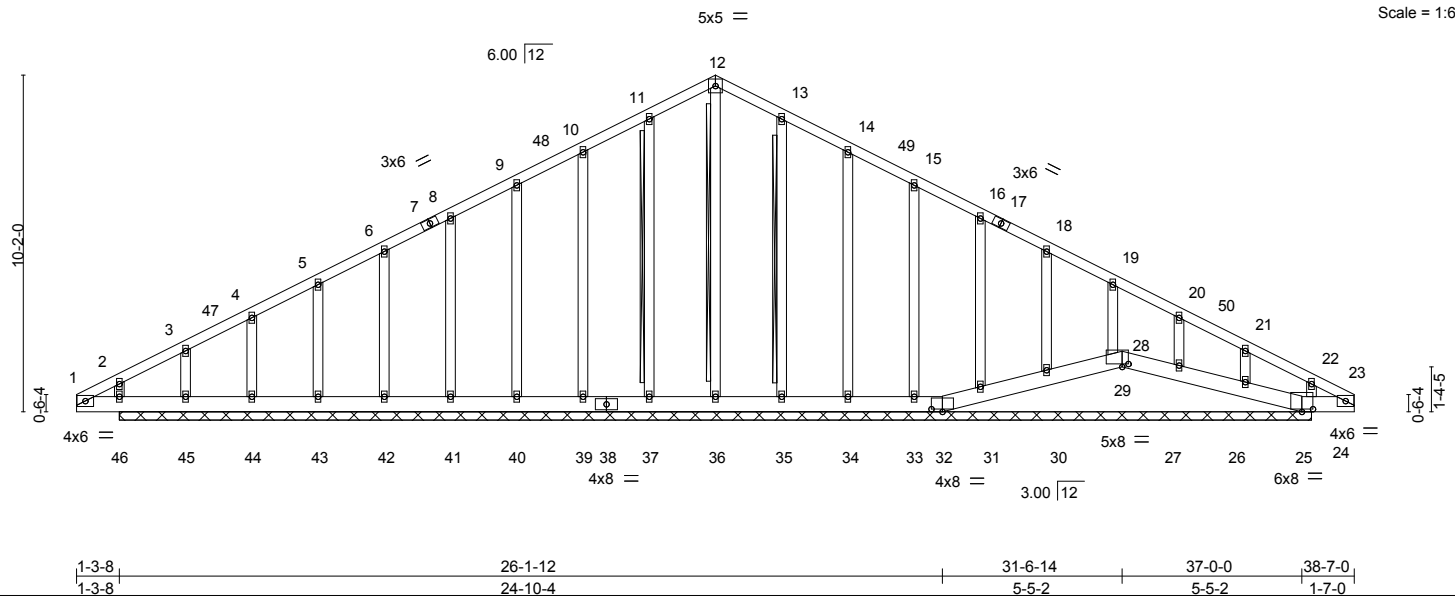

Plate Offsets (X,Y)-- [24:0-1-12,0-0-0], [25:0-4-0,0-1-0], [25:0-0-0,0-2-12], [28:0-0-0,0-2-13], [28:0-2-4,0-1-1], [29:0-1-12,0-0-7], [32:0-4-0,0-1-0]

LOADING (psf)		SPACING- 2-0-0		CSI.		DEFL. in (loc) l/defl L/d		PLATES	GRIP
TCLL	20.0	Plate Grip DOL	1.15	TC	0.08	Vert(LL) n/a - n/a	999	MT20	244/190
TCDL	10.0	Lumber DOL	1.15	BC	0.06	Vert(TL) n/a - n/a	999		
BCLL	0.0 *	Rep Stress Incr	YES	WB	0.14	Horz(TL) 0.00 24 n/a	n/a		
BCDL	10.0	Code IRC2009/TPI2007		Matrix-S				Weight: 284 lb	FT = 20%

LUMBER-

TOP CHORD 2x4 SP No.1
BOT CHORD 2x6 SP No.1
OTHERS 2x4 SP No.3

BRACING-

TOP CHORD Structural wood sheathing directly applied or 6-0-0 oc purlins.
BOT CHORD Rigid ceiling directly applied or 6-0-0 oc bracing.
WEBS T-Brace: 2x4 SPF No.2 - 12-36, 11-37, 13-35
Fasten (2X) T and I braces to narrow edge of web with 10d (0.131"x3") nails, 6in o.c.,with 3in minimum end distance.
Brace must cover 90% of web length.

REACTIONS. All bearings 36-0-0.
(lb) - Max Horz 46=-126(LC 4)
Max Uplift All uplift 100 lb or less at joint(s) 32, 37, 39, 40, 41, 42, 43, 44, 46, 35, 34, 33, 31, 30, 29, 27, 26, 24 except 25=-277(LC 4), 45=-103(LC 6)
Max Grav All reactions 250 lb or less at joint(s) 32, 28, 25, 36, 37, 39, 40, 41, 42, 43, 44, 45, 46, 35, 34, 33, 31, 30, 29, 27, 26 except 24=319(LC 11)

FORCES. (lb) - Max. Comp./Max. Ten. - All forces 250 (lb) or less except when shown.
TOP CHORD 9-10=0/261, 10-11=-24/345, 11-12=-26/429, 12-13=-28/429, 13-14=-24/345, 14-15=-25/261

NOTES-

1) Unbalanced roof live loads have been considered for this design.
2) Wind: ASCE 7-05; 100mph; TCDL=6.0psf; BCDL=5.0psf; h=15ft; Cat. II; Exp C; enclosed; MWFRS (low-rise) and C-C Corner(3) 0-0-0 to 4-4-13, Exterior(2) 4-4-13 to 14-10-11, Corner(3) 14-10-11 to 19-3-8, Exterior(2) 23-8-5 to 34-2-3 zone; cantilever left and right exposed ;C-C for members and forces & MWFRS for reactions shown; Lumber DOL=1.60 plate grip DOL=1.60
3) Truss designed for wind loads in the plane of the truss only. For studs exposed to wind (normal to the face), see Standard Industry Gable End Details as applicable, or consult qualified building designer as per ANSI/TPI 1.
4) All plates are 2x4 MT20 unless otherwise indicated.
5) Gable studs spaced at 2-0-0 oc.
6) This truss has been designed for a 10.0 psf bottom chord live load nonconcurrent with any other live loads.
7) * This truss has been designed for a live load of 20.0psf on the bottom chord in all areas with a clearance greater than 6-0-0 between the bottom chord and any other members, with BCDL = 10.0psf.
8) Provide mechanical connection (by others) of truss to bearing plate capable of withstanding 100 lb uplift at joint(s) 32, 37, 39, 40, 41, 42, 43, 44, 46, 35, 34, 33, 31, 30, 29, 27, 26, 24 except (jt=lb) 25=277, 45=103.
9) Non Standard bearing condition. Review required.
10) Warning: Additional permanent and stability bracing for truss system (not part of this component design) is always required.

October 22,2018

ENGINEERING BY TRENCO A MiTek Affiliate
818 Soundside Road
Edenton, NC 27932

Job	Truss	Truss Type	Qty	Ply	Jason Price / Campbell Pointe Bldg. 25
J0918-4429	A14	HIP	1	1	E12341613 Job Reference (optional)

Comtech, Inc., Fayetteville, NC 28309 — 8.130 s Mar 11 2018 MiTek Industries, Inc. Mon Oct 22 15:13:23 2018 Page 1

ID:ZzXTyMvxB55ZLn?FA7qN0rzLZck-Gi7A?ygCvNibp6FU45UJFo2ESVuDxzLnZzZZ0eyQq4Q

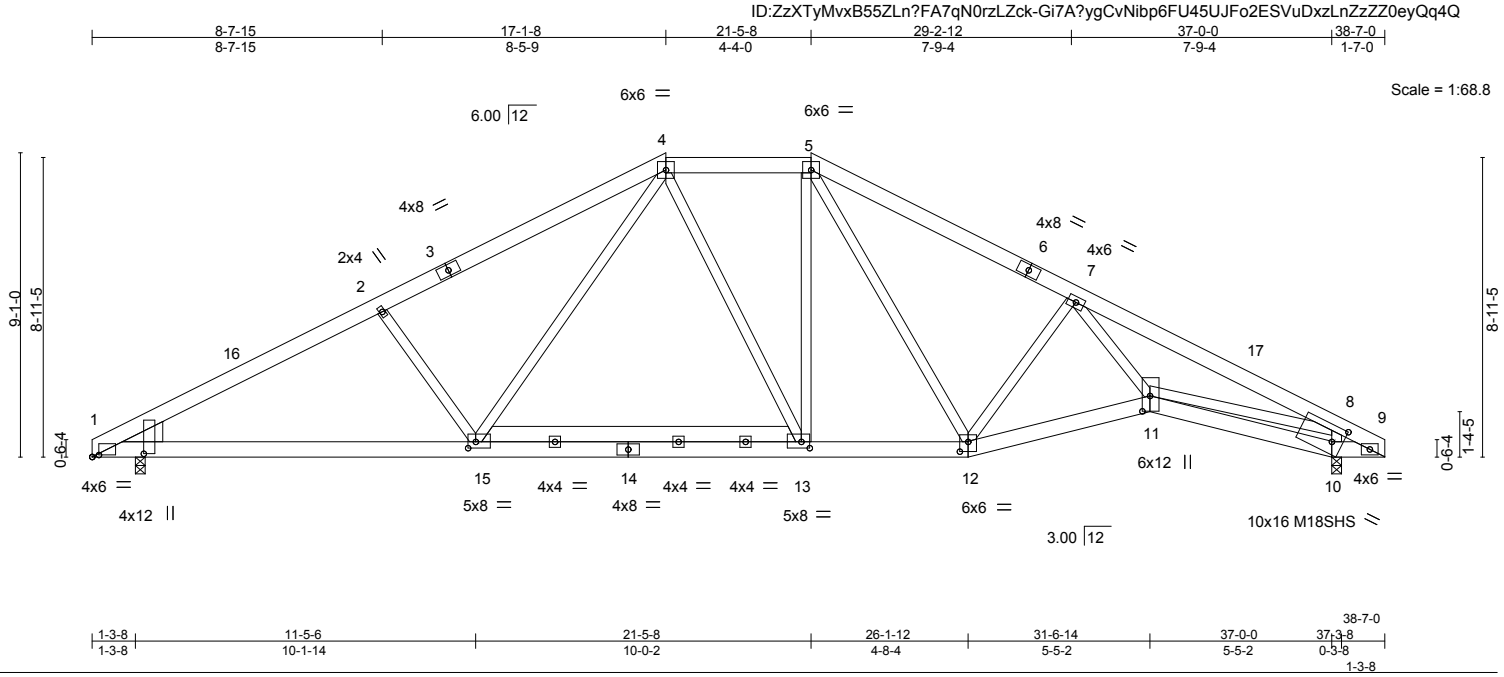

Plate Offsets (X,Y)-- [1:0-1-2,1-6-7], [1:0-2-6,0-0-11], [10:0-3-12,0-5-12], [11:0-5-8,0-2-12], [12:0-3-0,0-3-8], [13:0-3-0,0-2-4], [15:0-2-12,0-2-4]

LOADING (psf)		SPACING- 2-0-0		CSI.		DEFL. in (loc) l/defl L/d		PLATES	GRIP
TCLL	20.0	Plate Grip DOL	1.15	TC	0.96	Vert(LL) -0.23 13-15 >999 360		MT20	244/190
TCDL	10.0	Lumber DOL	1.15	BC	0.92	Vert(TL) -0.39 13-15 >999 240		M18SHS	244/190
BCLL	0.0 *	Rep Stress Incr	YES	WB	0.91	Horz(TL) 0.17 10 n/a n/a			
BCDL	10.0	Code IRC2009/TPI2007		Matrix-S		Wind(LL) 0.08 11-12 >999 240		Weight: 301 lb	FT = 20%

LUMBER-

TOP CHORD 2x6 SP No.1
BOT CHORD 2x6 SP No.1
WEBS 2x4 SP No.3 *Except*
8-11: 2x4 SP No.2, 13-15: 2x6 SP No.1
WEDGE
Left: 2x8 SP No.1

BRACING-

TOP CHORD Structural wood sheathing directly applied or 3-4-7 oc purlins.
BOT CHORD Rigid ceiling directly applied or 9-8-7 oc bracing.

REACTIONS. (lb/size) 10=2047/0-3-8, 1=1900/0-3-8
Max Horz 1=-110(LC 4)
Max Uplift 10=-159(LC 7), 1=-112(LC 6)

FORCES. (lb) - Max. Comp./Max. Ten. - All forces 250 (lb) or less except when shown.

TOP CHORD 1-2=-3737/850, 2-4=-3446/831, 4-5=-2409/686, 5-7=-2937/760, 7-8=-4682/940, 8-9=-742/141
BOT CHORD 1-15=-646/3265, 13-15=-315/2336, 12-13=-298/2398, 11-12=-616/3303, 10-11=-58/418, 9-10=-159/770
WEBS 2-15=-481/355, 4-15=-210/1155, 4-13=-55/363, 5-13=-18/736, 7-12=-1166/400, 7-11=-189/1574, 8-11=-647/3693, 8-10=-1887/547, 5-12=-141/362

NOTES-

1) Unbalanced roof live loads have been considered for this design.
2) Wind: ASCE 7-05; 100mph; TCDL=6.0psf; BCDL=5.0psf; h=15ft; Cat. II; Exp C; enclosed; MWFRS (low-rise) and C-C Exterior(2) 0-1-12 to 4-6-9, Interior(1) 4-6-9 to 10-10-13, Exterior(2) 10-10-13 to 27-8-3, Interior(1) 27-8-3 to 34-2-3 zone; cantilever left and right exposed ;C-C for members and forces & MWFRS for reactions shown; Lumber DOL=1.60 plate grip DOL=1.60
3) Provide adequate drainage to prevent water ponding.
4) All plates are MT20 plates unless otherwise indicated.
5) This truss has been designed for a 10.0 psf bottom chord live load nonconcurrent with any other live loads.
6) * This truss has been designed for a live load of 30.0psf on the bottom chord in all areas with a clearance greater than 6-0-0 between the bottom chord and any other members, with BCDL = 10.0psf.
7) Provide mechanical connection (by others) of truss to bearing plate capable of withstanding 100 lb uplift at joint(s) except (jt=lb) 10=159, 1=112.

October 22,2018

ENGINEERING BY TRENCO A MiTek Affiliate
818 Soundside Road
Edenton, NC 27932

Job	Truss	Truss Type	Qty	Ply	Jason Price / Campbell Pointe Bldg. 25
J0918-4429	A15	HIP	1	1	E12341614 Job Reference (optional)

Comtech, Inc., Fayetteville, NC 28309 — 8.130 s Mar 11 2018 MiTek Industries, Inc. Mon Oct 22 15:13:23 2018 Page 1

ID:ZzXTyMvxB55ZLn?FA7qN0rzLZck-Gi7A?ygCvNibp6FU45UJFo2ECVu2xzUnZzZZ0eyQq4Q

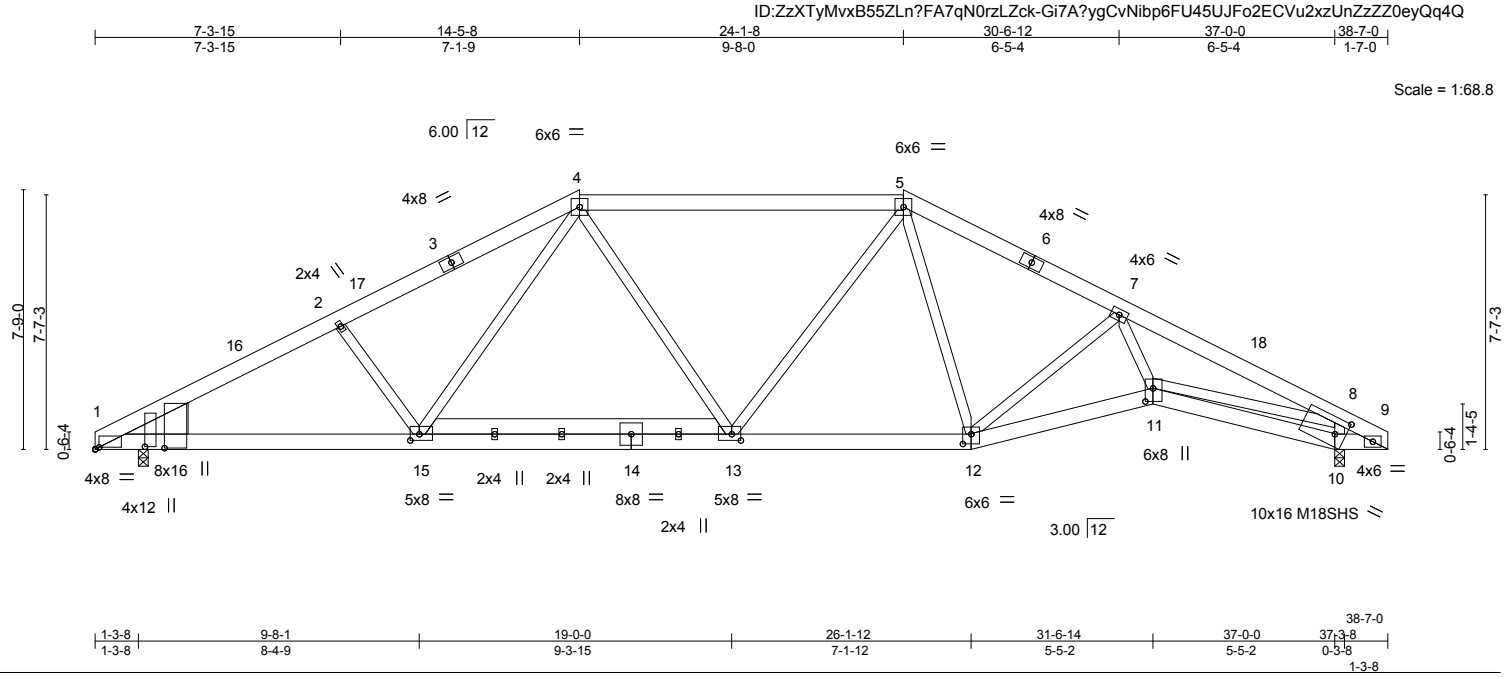

Plate Offsets (X,Y)-- [1:0-0-6,2-0-13], [1:0-0-14,1-5-13], [1:0-1-6,Edge], [10:0-3-12,0-5-12], [11:0-4-12,0-2-12], [12:0-3-0,0-3-8], [13:0-3-4,0-2-4], [15:0-3-4,0-2-4]

LOADING (psf)		SPACING- 2-0-0		CSI.		DEFL. in (loc) l/defl L/d		PLATES	GRIP
TCLL	20.0	Plate Grip DOL	1.15	TC	0.91	Vert(LL) -0.20 13-15 >999 360		MT20	244/190
TCDL	10.0	Lumber DOL	1.15	BC	0.94	Vert(TL) -0.54 13-15 >820 240		M18SHS	244/190
BCLL	0.0 *	Rep Stress Incr	NO	WB	0.90	Horz(TL) 0.18 10 n/a n/a			
BCDL	10.0	Code IRC2009/TPI2007		Matrix-S		Wind(LL) 0.21 13-15 >999 240		Weight: 295 lb	FT = 20%

LUMBER-
TOP CHORD 2x6 SP No.1
BOT CHORD 2x6 SP No.1
WEBS 2x4 SP No.3 *Except*
8-11: 2x4 SP No.2, 13-15: 2x6 SP No.1
WEDGE
Left: 2x12 SP No.1

BRACING-
TOP CHORD Structural wood sheathing directly applied or 3-4-12 oc purlins.
BOT CHORD Rigid ceiling directly applied or 8-0-15 oc bracing.

REACTIONS. (lb/size) 10=1993/0-3-8, 1=1927/0-3-8
Max Horz 1=-92(LC 4)
Max Uplift 10=-171(LC 7), 1=-141(LC 6)

FORCES. (lb) - Max. Comp./Max. Ten. - All forces 250 (lb) or less except when shown.
TOP CHORD 1-2=-3764/1170, 2-4=-3528/1171, 4-5=-2718/934, 5-7=-2813/909, 7-8=-4528/1236, 8-9=-753/178
BOT CHORD 1-15=-939/3267, 13-15=-619/2570, 12-13=-540/2411, 11-12=-905/3538, 10-11=-74/444, 9-10=-195/788
WEBS 2-15=-334/282, 4-15=-291/927, 4-13=-7/413, 5-13=-93/644, 5-12=-26/282, 7-12=-1285/446, 7-11=-274/1445, 8-11=-903/3527, 8-10=-1853/645

NOTES-
1) Unbalanced roof live loads have been considered for this design.
2) Wind: ASCE 7-05; 100mph; TCDL=6.0psf; BCDL=5.0psf; h=15ft; Cat. II; Exp C; enclosed; MWFRS (low-rise) and C-C Exterior(2) 0-1-12 to 4-6-9, Interior(1) 4-6-9 to 8-2-13, Exterior(2) 8-2-13 to 30-6-12, Interior(1) 30-6-12 to 34-2-3 zone; cantilever left and right exposed ;C-C for members and forces & MWFRS for reactions shown; Lumber DOL=1.60 plate grip DOL=1.60
3) Provide adequate drainage to prevent water ponding.
4) All plates are MT20 plates unless otherwise indicated.
5) This truss has been designed for a 10.0 psf bottom chord live load nonconcurrent with any other live loads.
6) * This truss has been designed for a live load of 20.0psf on the bottom chord in all areas with a clearance greater than 6-0-0 between the bottom chord and any other members, with BCDL = 10.0psf.
7) Provide mechanical connection (by others) of truss to bearing plate capable of withstanding 100 lb uplift at joint(s) except (jt=lb) 10=171, 1=141.

LOAD CASE(S) Standard
1) Dead + Roof Live (balanced) + Uninhab. Attic Storage: Lumber Increase=1.15, Plate Increase=1.15
Uniform Loads (plf)
Vert: 1-4=-60, 4-5=-60, 5-9=-60, 1-15=-20, 13-15=-80, 12-13=-60, 11-12=-20, 10-11=-20, 9-10=-20

October 22,2018

ENGINEERING BY TRENCO A MiTek Affiliate
818 Soundside Road
Edenton, NC 27932

Job	Truss	Truss Type	Qty	Ply	Jason Price / Campbell Pointe Bldg. 25
J0918-4429	A16	HIP	1	1	E12341615
					Job Reference (optional)

Comtech, Inc., Fayetteville, NC 28309 — 8.130 s Mar 11 2018 MiTek Industries, Inc. Mon Oct 22 15:13:24 2018 Page 1

ID:ZzXTyMvxB55ZLn?FA7qN0rzLZck-luhYCIhqghqSQGqhep?Yo0aO7vFogRkwocl7Y5yQq4P

6-6-1	12-9-13	17-1-8	19-4-7	25-9-3	31-4-9	37-0-0	38-7-0
6-6-1	6-3-12	4-3-11	2-2-15	6-4-12	5-7-7	5-7-7	1-7-0

Scale = 1:67.1

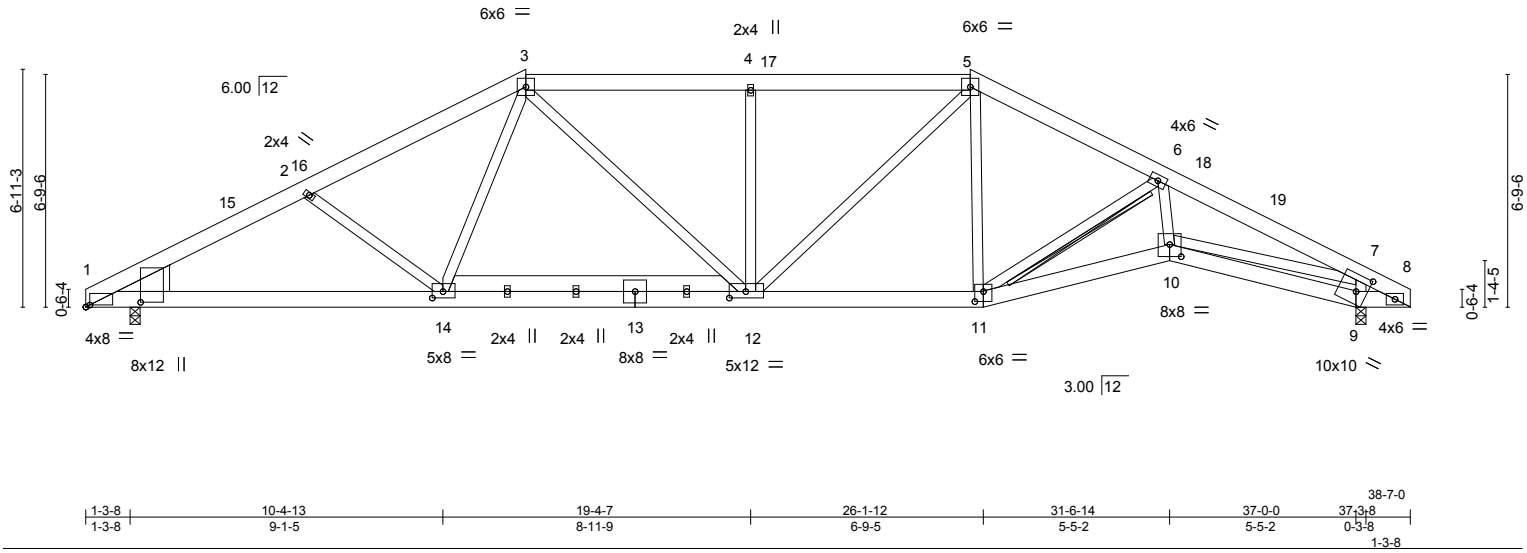

Plate Offsets (X,Y)-- [1:0-1-10,1-7-2], [1:0-1-6,Edge], [9:0-3-12,0-5-12], [10:0-4-0,0-4-4], [11:0-3-0,0-3-8], [12:0-5-12,0-2-4], [14:0-3-12,0-2-4]

LOADING (psf)		SPACING- 2-0-0		CSI.		DEFL. in (loc) l/defl L/d		PLATES	GRIP
TCLL	20.0	Plate Grip DOL	1.15	TC	0.96	Vert(LL) -0.20 12-14 >999 360		MT20	244/190
TCDL	10.0	Lumber DOL	1.15	BC	0.84	Vert(TL) -0.53 12-14 >842 240			
BCLL	0.0 *	Rep Stress Incr	NO	WB	0.77	Horz(TL) 0.18 9 n/a n/a			
BCDL	10.0	Code IRC2009/TPI2007		Matrix-S		Wind(LL) 0.21 12-14 >999 240		Weight: 296 lb	FT = 20%

LUMBER-

TOP CHORD 2x6 SP No.1
BOT CHORD 2x6 SP No.1
WEBS 2x4 SP No.3 *Except*
7-10: 2x4 SP No.2, 12-14: 2x6 SP No.1
WEDGE
Left: 2x10 SP No.1

BRACING-

TOP CHORD Structural wood sheathing directly applied or 3-7-7 oc purlins.
BOT CHORD Rigid ceiling directly applied or 7-9-10 oc bracing.
WEBS T-Brace: 2x4 SPF No.2 - 6-11
Fasten (2X) T and I braces to narrow edge of web with 10d (0.131"x3") nails, 6in o.c.,with 3in minimum end distance. Brace must cover 90% of web length.

REACTIONS. (lb/size) 9=1819/0-3-8, 1=1794/0-3-8
Max Horz 1=-82(LC 4)
Max Uplift 9=-159(LC 7), 1=-128(LC 6)

FORCES. (lb) - Max. Comp./Max. Ten. - All forces 250 (lb) or less except when shown.

TOP CHORD 1-2=-3476/1210, 2-3=-3182/1118, 3-4=-2825/1085, 4-5=-2825/1085, 5-6=-2490/915, 6-7=-4058/1282, 7-8=-692/179
BOT CHORD 1-14=-988/3036, 12-14=-687/2509, 11-12=-571/2198, 10-11=-1023/3504, 9-10=-72/416, 8-9=-194/728
WEBS 2-14=-334/294, 3-14=-193/759, 3-12=-126/572, 4-12=-465/257, 5-12=-291/988, 6-11=-1451/507, 6-10=-280/1302, 7-10=-952/3138, 7-9=-1691/654

NOTES-

1) Unbalanced roof live loads have been considered for this design.
2) Wind: ASCE 7-05; 100mph; TCDL=6.0psf; BCDL=5.0psf; h=15ft; Cat. II; Exp C; enclosed; MWFRS (low-rise) and C-C Exterior(2) 0-1-12 to 4-6-9, Interior(1) 4-6-9 to 6-7-3, Exterior(2) 6-7-3 to 12-9-13, Interior(1) 19-0-8 to 19-4-7, Exterior(2) 25-9-3 to 38-7-0 zone; cantilever left and right exposed ;C-C for members and forces & MWFRS for reactions shown; Lumber DOL=1.60 plate grip DOL=1.60
3) Provide adequate drainage to prevent water ponding.
4) This truss has been designed for a 10.0 psf bottom chord live load nonconcurrent with any other live loads.
5) * This truss has been designed for a live load of 20.0psf on the bottom chord in all areas with a clearance greater than 6-0-0 between the bottom chord and any other members.
6) Provide mechanical connection (by others) of truss to bearing plate capable of withstanding 100 lb uplift at joint(s) except (jt=lb) 9=159, 1=128.
7) Warning: Additional permanent and stability bracing for truss system (not part of this component design) is always required.

LOAD CASE(S) Standard

1) Dead + Roof Live (balanced): Lumber Increase=1.15, Plate Increase=1.15
Uniform Loads (plf)
Vert: 1-3=-60, 3-5=-60, 5-8=-60, 1-14=-20, 12-14=-80, 11-12=-20, 10-11=-20, 9-10=-20, 8-9=-20

October 22,2018

ENGINEERING BY TRENCO A MiTek Affiliate
818 Soundside Road
Edenton, NC 27932

Job	Truss	Truss Type	Qty	Ply	Jason Price / Campbell Pointe Bldg. 25
J0918-4429	A17	HIP	1	1	E12341616
					Job Reference (optional)

Comtech, Inc., Fayetteville, NC 28309 8.130 s Mar 11 2018 MiTek Industries, Inc. Mon Oct 22 15:13:25 2018 Page 1

ID:ZzXTyMvxB55ZLn?FA7qN0rzLZck-D5FxQdhSR_yl2QPtCWWnKD7c?JfwPsF41G2g4XyQq4O

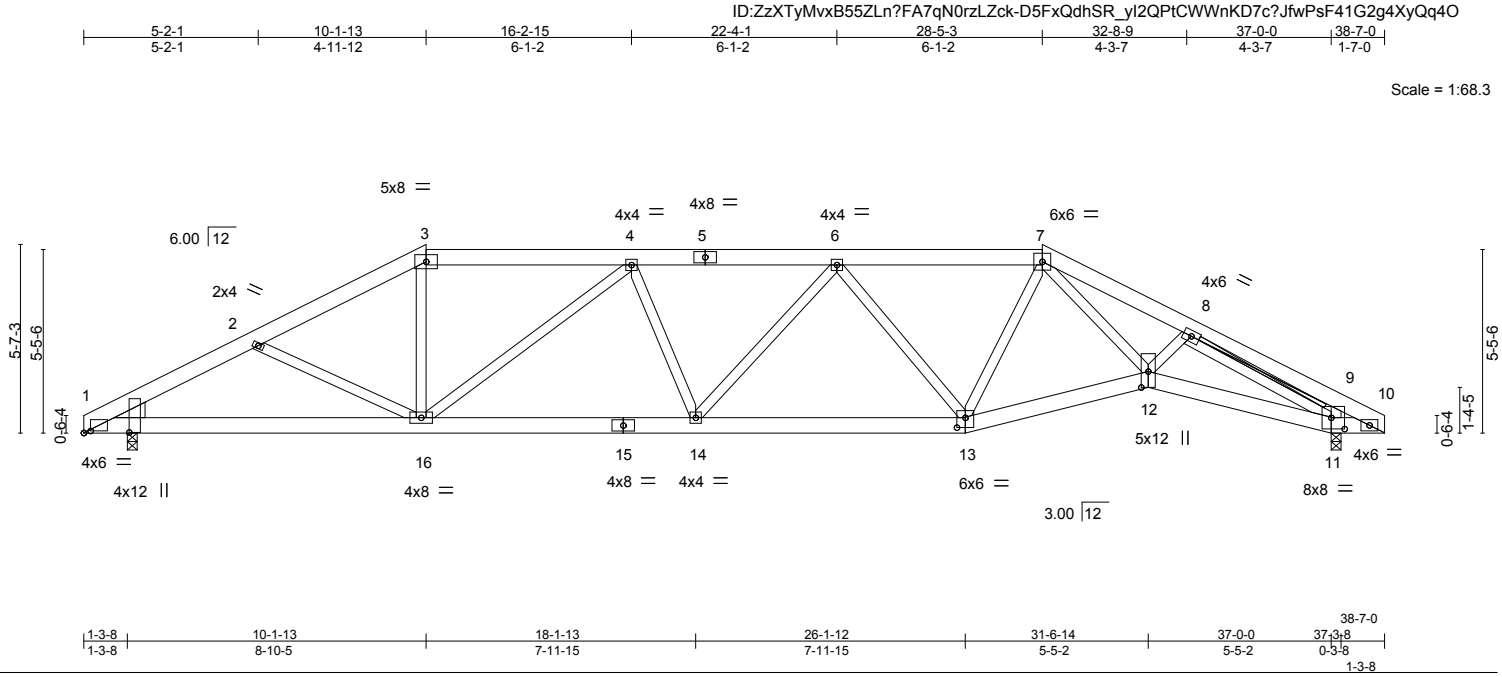

Plate Offsets (X,Y)-- [1:0-0-2,1-4-2], [1:0-2-6,0-0-11], [9:0-1-12,0-0-14], [11:0-4-12,0-4-0], [12:0-5-11,0-2-8], [13:0-3-0,0-3-8]

LOADING (psf)		SPACING- 2-0-0		CSI.		DEFL.	in	(loc)	l/defl	L/d	PLATES	GRIP
TCLL	20.0	Plate Grip DOL	1.15	TC	0.82	Vert(LL)	-0.13	14	>999	360	MT20	244/190
TCDL	10.0	Lumber DOL	1.15	BC	0.59	Vert(TL)	-0.36	13-14	>999	240		
BCLL	0.0 *	Rep Stress Incr	YES	WB	0.94	Horz(TL)	0.16	11	n/a	n/a		
BCDL	10.0	Code IRC2009/TPI2007		Matrix-S		Wind(LL)	0.11	14	>999	240	Weight: 266 lb	FT = 20%

LUMBER-

TOP CHORD 2x6 SP No.1
BOT CHORD 2x6 SP No.1
WEBS 2x4 SP No.3
WEDGE
Left: 2x6 SP No.1

BRACING-

TOP CHORD Structural wood sheathing directly applied or 4-0-12 oc purlins.
BOT CHORD Rigid ceiling directly applied or 8-10-6 oc bracing.
WEBS T-Brace: 2x4 SPF No.2 - 8-11
Fasten (2X) T and I braces to narrow edge of web with 10d (0.131"x3") nails, 6in o.c.,with 3in minimum end distance.
Brace must cover 90% of web length.

REACTIONS. (lb/size) 11=1604/0-3-8, 1=1471/0-3-8
Max Horz 1=-65(LC 4)
Max Uplift 11=-111(LC 7), 1=-83(LC 5)

FORCES. (lb) - Max. Comp./Max. Ten. - All forces 250 (lb) or less except when shown.

TOP CHORD 1-2=-2771/959, 2-3=-2492/819, 3-4=-2160/781, 4-6=-2710/919, 6-7=-2224/787, 7-8=-3326/1069, 8-9=-723/227, 9-10=-604/126
BOT CHORD 1-16=-778/2418, 14-16=-691/2696, 13-14=-677/2614, 12-13=-550/2230, 11-12=-792/2801, 10-11=-142/647
WEBS 2-16=-269/278, 3-16=-159/750, 4-16=-780/213, 6-13=-700/241, 7-13=-36/257, 7-12=-348/1258, 8-12=-23/462, 8-11=-2660/831, 9-11=-569/288

NOTES-

1) Unbalanced roof live loads have been considered for this design.
2) Wind: ASCE 7-05; 100mph; TCDL=6.0psf; BCDL=5.0psf; h=15ft; Cat. II; Exp C; enclosed; MWFRS (low-rise) and C-C Exterior(2) 0-1-12 to 16-2-15, Interior(1) 16-2-15 to 22-2-8, Exterior(2) 22-2-8 to 28-5-3 zone; cantilever left and right exposed ;C-C for members and forces & MWFRS for reactions shown; Lumber DOL=1.60 plate grip DOL=1.60
3) Provide adequate drainage to prevent water ponding.
4) This truss has been designed for a 10.0 psf bottom chord live load nonconcurrent with any other live loads.
5) * This truss has been designed for a live load of 20.0psf on the bottom chord in all areas with a clearance greater than 6-0-0 between the bottom chord and any other members.
6) Provide mechanical connection (by others) of truss to bearing plate capable of withstanding 100 lb uplift at joint(s) 1 except (jt=lb) 11=111.
7) Warning: Additional permanent and stability bracing for truss system (not part of this component design) is always required.

October 22,2018

ENGINEERING BY TRENCO A MiTek Affiliate
818 Soundside Road
Edenton, NC 27932

Job	Truss	Truss Type	Qty	Ply	Jason Price / Campbell Pointe Bldg. 25
J0918-4429	A18	HIP GIRDER	1	2	E12341617 Job Reference (optional)

Comtech, Inc., Fayetteville, NC 28309 — 8.130 s Mar 11 2018 MiTek Industries, Inc. Mon Oct 22 15:13:27 2018 Page 1

ID:ZzXTyMvxB55ZLn?FA7qN0rzLZck-9TMhrJjjzcC0HkZGJxYFQeCzV6Outu5NUaXn9PyQq4M

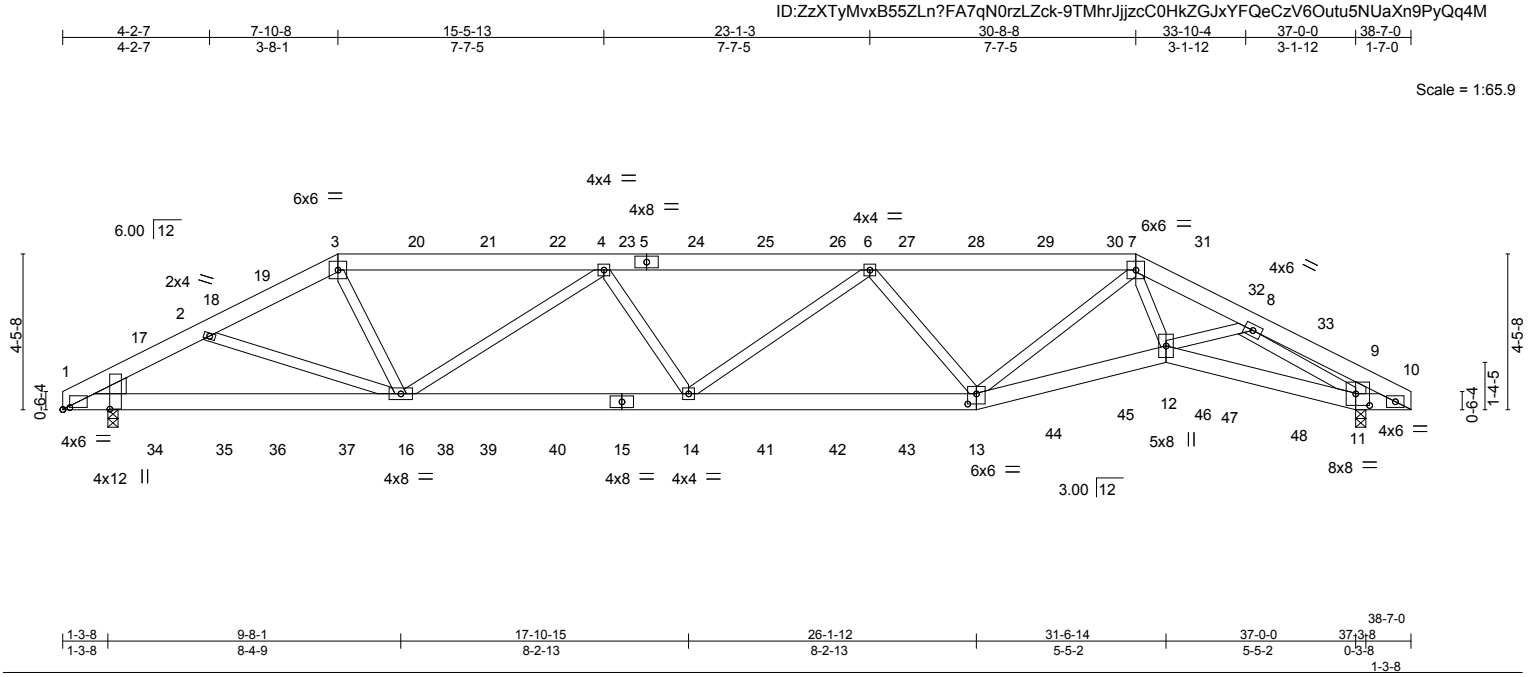

Plate Offsets (X,Y)-- [1:0-0-2,1-4-2], [1:0-2-6,0-0-11], [9:0-1-12,0-0-14], [11:0-4-12,0-4-0], [13:0-3-0,0-3-8]

LOADING (psf)		SPACING- 2-0-0		CSI.		DEFL.	in	(loc)	l/defl	L/d	PLATES	GRIP
TCLL	20.0	Plate Grip DOL	1.15	TC	0.76	Vert(LL)	-0.12	13-14	>999	360	MT20	244/190
TCDL	10.0	Lumber DOL	1.15	BC	0.43	Vert(TL)	-0.32	13-14	>999	240		
BCLL	0.0 *	Rep Stress Incr	NO	WB	0.41	Horz(TL)	0.12	11	n/a	n/a		
BCDL	10.0	Code IRC2009/TPI2007		Matrix-S		Wind(LL)	0.13	13-14	>999	240	Weight: 516 lb	FT = 20%

LUMBER-
TOP CHORD 2x6 SP No.1
BOT CHORD 2x6 SP No.1
WEBS 2x4 SP No.3
WEDGE
Left: 2x6 SP No.1

BRACING-
TOP CHORD Structural wood sheathing directly applied or 6-0-0 oc purlins.
BOT CHORD Rigid ceiling directly applied or 10-0-0 oc bracing.

REACTIONS. (lb/size) 11=2289/0-3-8, 1=2169/0-3-8
Max Horz 1=-51(LC 3)
Max Uplift 11=-576(LC 6), 1=-496(LC 4)

FORCES. (lb) - Max. Comp./Max. Ten. - All forces 250 (lb) or less except when shown.
TOP CHORD 1-2=-4056/1042, 2-3=-3798/999, 3-4=-3945/1018, 4-6=-5007/1340, 6-7=-4130/1142, 7-8=-5095/1381, 8-9=-839/253, 9-10=-680/191
BOT CHORD 1-16=-935/3545, 14-16=-1363/4975, 13-14=-1344/4785, 12-13=-1100/4151, 11-12=-923/3529, 10-11=-200/735
WEBS 3-16=-228/1317, 4-16=-1293/498, 4-14=0/264, 6-14=0/385, 6-13=-1097/436, 7-12=-413/1729, 8-12=-338/1240, 8-11=-3563/933, 9-11=-716/233

NOTES-
1) 2-ply truss to be connected together with 10d (0.131"x3") nails as follows:
Top chords connected as follows: 2x6 - 2 rows staggered at 0-9-0 oc.
Bottom chords connected as follows: 2x6 - 2 rows staggered at 0-9-0 oc.
Webs connected as follows: 2x4 - 1 row at 0-9-0 oc.
2) All loads are considered equally applied to all plies, except if noted as front (F) or back (B) face in the LOAD CASE(S) section. Ply to ply connections have been provided to distribute only loads noted as (F) or (B), unless otherwise indicated.
3) Unbalanced roof live loads have been considered for this design.
4) Wind: ASCE 7-05; 100mph; TCDL=6.0psf; BCDL=5.0psf; h=15ft; Cat. II; Exp C; enclosed; MWFRS (low-rise); cantilever left and right exposed ; Lumber DOL=1.60 plate grip DOL=1.60
5) Provide adequate drainage to prevent water ponding.
6) This truss has been designed for a 10.0 psf bottom chord live load nonconcurrent with any other live loads.
7) * This truss has been designed for a live load of 20.0psf on the bottom chord in all areas with a clearance greater than 6-0-0 between the bottom chord and any other members.
8) Provide mechanical connection (by others) of truss to bearing plate capable of withstanding 100 lb uplift at joint(s) except (jt=lb) 11=576, 1=496.

October 22,2018

Continued on page 2

ENGINEERING BY TRENCO A MiTek Affiliate
818 Soundside Road
Edenton, NC 27932

NOTES-

9) Hanger(s) or other connection device(s) shall be provided sufficient to support concentrated load(s) 100 lb down and 54 lb up at 2-7-7, 53 lb down and 33 lb up at 4-7-7, 26 lb down and 16 lb up at 6-1-7, 68 lb down and 67 lb up at 7-10-8, 53 lb down and 67 lb up at 10-1-7, 53 lb down and 67 lb up at 12-1-7, 53 lb down and 67 lb up at 14-1-7, 53 lb down and 67 lb up at 16-1-7, 53 lb down and 67 lb up at 18-1-7, 53 lb down and 67 lb up at 20-1-7, 53 lb down and 67 lb up at 22-1-7, 53 lb down and 67 lb up at 24-1-7, 53 lb down and 67 lb up at 26-1-0, 50 lb down and 61 lb up at 28-1-0, 58 lb down and 55 lb up at 30-1-0, 20 lb down and 12 lb up at 32-1-0, and 61 lb down and 31 lb up at 33-7-0, and 75 lb down and 58 lb up at 35-7-0 on top chord, and 48 lb down at 2-7-7, 63 lb down and 18 lb up at 4-7-7, 97 lb down and 40 lb up at 6-1-7, 37 lb down at 8-1-7, 37 lb down at 10-1-7, 37 lb down at 12-1-7, 37 lb down at 14-1-7, 37 lb down at 16-1-7, 37 lb down at 18-1-7, 37 lb down at 20-1-7, 37 lb down at 22-1-7, 37 lb down at 24-1-7, 37 lb down at 26-1-12, 33 lb down and 14 lb up at 28-1-0, 44 lb down and 16 lb up at 30-1-0, 95 lb down and 48 lb up at 32-1-0, and 45 lb down and 16 lb up at 33-7-0, and 33 lb down at 35-7-0 on bottom chord. The design/selection of such connection device(s) is the responsibility of others.

LOAD CASE(S) Standard

1) Dead + Roof Live (balanced): Lumber Increase=1.15, Plate Increase=1.15
   Uniform Loads (plf)
   Vert: 1-3=-60, 3-7=-60, 7-10=-60, 1-13=-20, 12-13=-20, 11-12=-20, 10-11=-20
   Concentrated Loads (lb)
   Vert: 3=-53(B) 15=-23(B) 13=-23(B) 14=-23(B) 17=-60(B) 18=-13(B) 20=-53(B) 21=-53(B) 22=-53(B) 23=-53(B) 24=-53(B) 25=-53(B) 26=-53(B) 27=-53(B) 28=-53(B) 29=-50(B) 30=-51(B) 32=-21(B) 33=-35(B) 34=-34(B) 35=-63(B) 36=-97(B) 37=-23(B) 38=-23(B) 39=-23(B) 40=-23(B) 41=-23(B) 42=-23(B) 43=-23(B) 44=-18(B) 45=-24(B) 46=-95(B) 47=-45(B) 48=-18(B)

Job	Truss	Truss Type	Qty	Ply	Jason Price / Campbell Pointe Bldg. 25
J0918-4429	B01	GABLE	6	1	E12341618 Job Reference (optional)

Comtech, Inc., Fayetteville, NC 28309

8.130 s Mar 11 2018 MiTek Industries, Inc. Mon Oct 22 15:13:28 2018 Page 1
ID:ZzXTyMvxB55ZLn?FA7qN0rzLZck-dfw32fkLkvKtvu8Ste3UyslFQWnEcPdWjEGKhsyQq4L

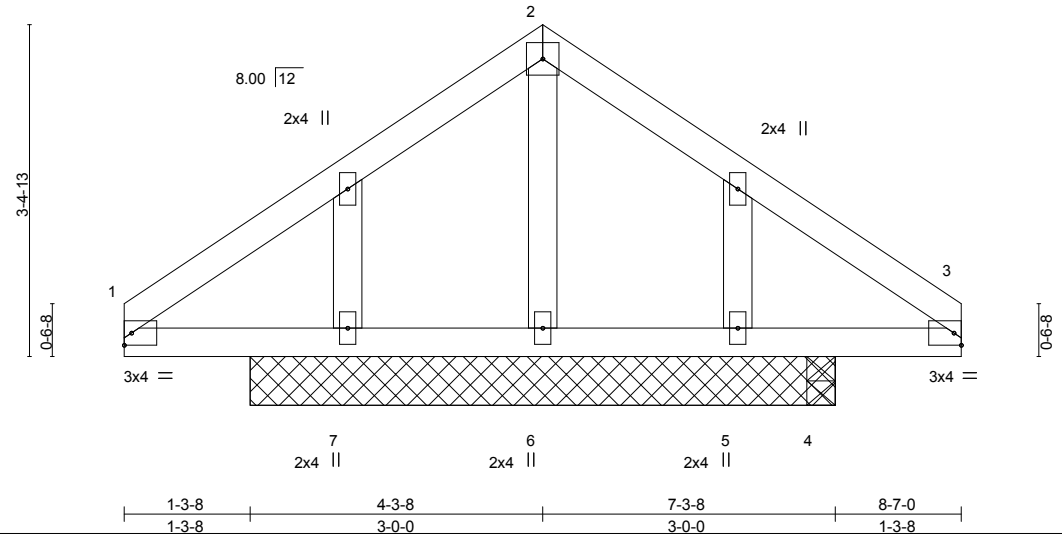

LOADING (psf)		SPACING- 2-0-0		CSI.		DEFL.	in	(loc)	l/defl	L/d	PLATES	GRIP
TCLL	20.0	Plate Grip DOL	1.15	TC	0.30	Vert(LL)	0.00	6-7	>999	360	MT20	244/190
TCDL	10.0	Lumber DOL	1.15	BC	0.17	Vert(TL)	0.00	6-7	>999	240		
BCLL	0.0 *	Rep Stress Incr	YES	WB	0.14	Horz(TL)	-0.00	4	n/a	n/a		
BCDL	10.0	Code IRC2009/TPI2007		Matrix-P		Wind(LL)	-0.00	6-7	>999	240	Weight: 37 lb	FT = 20%

LUMBER-
TOP CHORD 2x4 SP No.1
BOT CHORD 2x4 SP No.1
OTHERS 2x4 SP No.3

BRACING-
TOP CHORD Structural wood sheathing directly applied or 8-7-0 oc purlins.
BOT CHORD Rigid ceiling directly applied or 6-0-0 oc bracing.

REACTIONS. All bearings 6-0-0 except (jt=length) 4=0-3-8.
(lb) - Max Horz 7=-107(LC 4)
Max Uplift All uplift 100 lb or less at joint(s) 7 except 6=-203(LC 6), 5=-124(LC 11), 4=-184(LC 10)
Max Grav All reactions 250 lb or less at joint(s) 7, 5, 4 except 6=553(LC 1)

FORCES. (lb) - Max. Comp./Max. Ten. - All forces 250 (lb) or less except when shown.
TOP CHORD 1-2=-213/296, 2-3=-213/296
WEBS 2-6=-532/389

NOTES-
1) Unbalanced roof live loads have been considered for this design.
2) Wind: ASCE 7-05; 100mph; TCDL=6.0psf; BCDL=5.0psf; h=15ft; Cat. II; Exp C; enclosed; MWFRS (low-rise) gable end zone and C-C Exterior(2) zone; cantilever left and right exposed ;C-C for members and forces & MWFRS for reactions shown; Lumber DOL=1.60 plate grip DOL=1.60
3) Truss designed for wind loads in the plane of the truss only. For studs exposed to wind (normal to the face), see Standard Industry Gable End Details as applicable, or consult qualified building designer as per ANSI/TPI 1.
4) Gable studs spaced at 2-0-0 oc.
5) This truss has been designed for a 10.0 psf bottom chord live load nonconcurrent with any other live loads.
6) * This truss has been designed for a live load of 20.0psf on the bottom chord in all areas with a clearance greater than 6-0-0 between the bottom chord and any other members.
7) Provide mechanical connection (by others) of truss to bearing plate capable of withstanding 100 lb uplift at joint(s) 7 except (jt=lb) 6=203, 5=124, 4=184.

October 22,2018

ENGINEERING BY TRENCO A MiTek Affiliate
818 Soundside Road
Edenton, NC 27932

Job	Truss	Truss Type	Qty	Ply	Jason Price / Campbell Pointe Bldg. 25
J0918-4429	B02	COMMON	12	1	E12341619 Job Reference (optional)

Comtech, Inc., Fayetteville, NC 28309

8.130 s Mar 11 2018 MiTek Industries, Inc. Mon Oct 22 15:13:28 2018 Page 1
ID:ZzXTyMvxB55ZLn?FA7qN0rzLZck-dfw32fkLkvKtvu8Ste3UysIlsWoYcR?WjEGKhsyQq4L

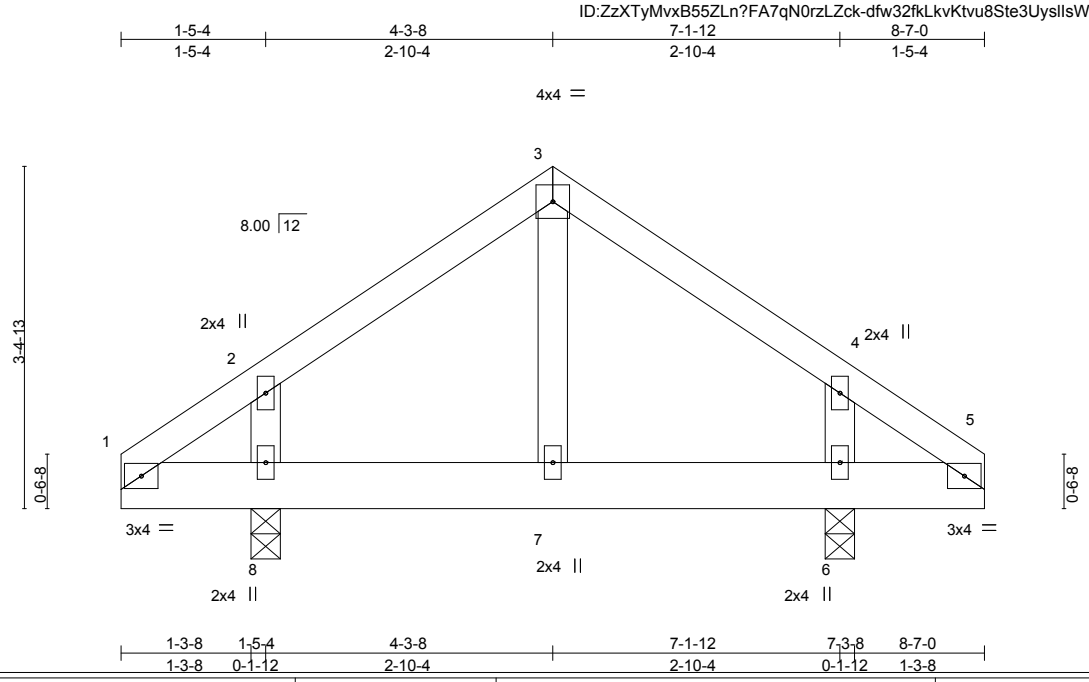

LOADING (psf)		SPACING-	2-0-0	CSI.		DEFL.	in	(loc)	l/defl	L/d	PLATES	GRIP
TCLL	20.0	Plate Grip DOL	1.15	TC	0.08	Vert(LL)	-0.00	7	>999	360	MT20	244/190
TCDL	10.0	Lumber DOL	1.15	BC	0.08	Vert(TL)	-0.01	7	>999	240		
BCLL	0.0 *	Rep Stress Incr	YES	WB	0.05	Horz(TL)	0.00	6	n/a	n/a		
BCDL	10.0	Code IRC2009/TPI2007		Matrix-S		Wind(LL)	0.00	7	>999	240	Weight: 42 lb	FT = 20%

LUMBER-
TOP CHORD 2x4 SP No.1
BOT CHORD 2x6 SP No.1
WEBS 2x4 SP No.3

BRACING-
TOP CHORD Structural wood sheathing directly applied or 6-0-0 oc purlins.
BOT CHORD Rigid ceiling directly applied or 10-0-0 oc bracing.

REACTIONS. (lb/size) 8=343/0-3-8, 6=343/0-3-8
Max Horz 8=-83(LC 4)
Max Uplift 8=-69(LC 6), 6=-69(LC 7)

FORCES. (lb) - Max. Comp./Max. Ten. - All forces 250 (lb) or less except when shown.

NOTES-
1) Unbalanced roof live loads have been considered for this design.
2) Wind: ASCE 7-05; 100mph; TCDL=6.0psf; BCDL=5.0psf; h=15ft; Cat. II; Exp C; enclosed; MWFRS (low-rise) and C-C Exterior(2) zone; cantilever left and right exposed ;C-C for members and forces & MWFRS for reactions shown; Lumber DOL=1.60 plate grip DOL=1.60
3) This truss has been designed for a 10.0 psf bottom chord live load nonconcurrent with any other live loads.
4) * This truss has been designed for a live load of 20.0psf on the bottom chord in all areas with a clearance greater than 6-0-0 between the bottom chord and any other members.
5) Provide mechanical connection (by others) of truss to bearing plate capable of withstanding 100 lb uplift at joint(s) 8, 6.

October 22,2018

ENGINEERING BY TRENCO A MiTek Affiliate
818 Soundside Road
Edenton, NC 27932

Job	Truss	Truss Type	Qty	Ply	Jason Price / Campbell Pointe Bldg. 25
J0918-4429	J03	JACK-OPEN	2	1	E12341620 Job Reference (optional)

Comtech, Inc., Fayetteville, NC 28309 8.130 s Mar 11 2018 MiTek Industries, Inc. Mon Oct 22 15:13:29 2018 Page 1
ID:ZzXTyMvxB55ZLn?FA7qN0rzLZck-5sURG?kzVDSkX1jeRMajV3IUIw9nLu_fyu0uEIyQq4K

2-6-11
2-6-11

Scale: 1"=1'

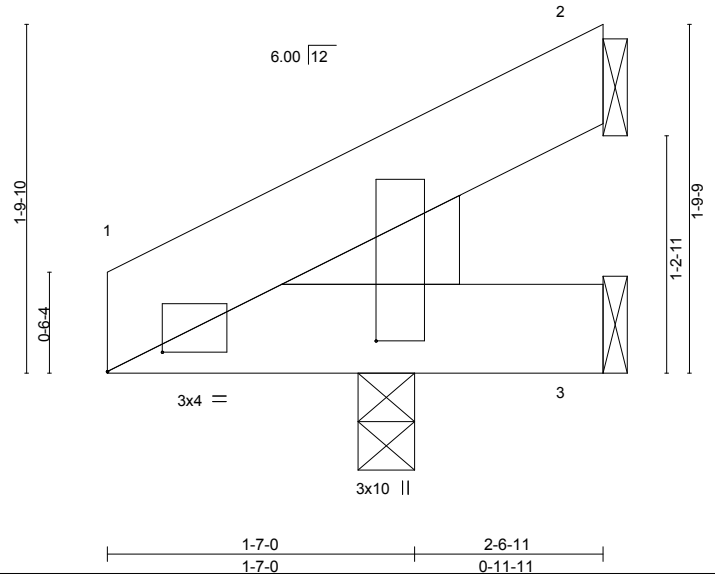

Plate Offsets (X,Y)-- [1:0-3-6,0-1-3], [1:0-1-14,1-4-10]

LOADING (psf)		SPACING- 2-0-0		CSI.		DEFL. in (loc) l/defl L/d					PLATES	GRIP
TCLL	20.0	Plate Grip DOL	1.15	TC	0.04	Vert(LL)	-0.00	1	>999	360	MT20	244/190
TCDL	10.0	Lumber DOL	1.15	BC	0.02	Vert(TL)	-0.00	1-3	>999	240		
BCLL	0.0 *	Rep Stress Incr	YES	WB	0.00	Horz(TL)	-0.00	2	n/a	n/a		
BCDL	10.0	Code IRC2009/TPI2007		Matrix-P		Wind(LL)	0.00	1	****	240	Weight: 15 lb	FT = 20%

LUMBER-
TOP CHORD 2x6 SP No.1
BOT CHORD 2x6 SP No.1
WEDGE
Left: 2x6 SP No.1

BRACING-
TOP CHORD Structural wood sheathing directly applied or 2-6-11 oc purlins.
BOT CHORD Rigid ceiling directly applied or 10-0-0 oc bracing.

REACTIONS. (lb/size) 2=70/Mechanical, 3=23/Mechanical, 1=94/0-3-8
Max Horz 1=41(LC 6)
Max Uplift 2=-35(LC 6), 1=-1(LC 6)
Max Grav 2=70(LC 1), 3=47(LC 2), 1=94(LC 1)

FORCES. (lb) - Max. Comp./Max. Ten. - All forces 250 (lb) or less except when shown.

NOTES-
1) Wind: ASCE 7-05; 100mph; TCDL=6.0psf; BCDL=5.0psf; h=15ft; Cat. II; Exp C; enclosed; MWFRS (low-rise) and C-C Exterior(2) zone; cantilever left exposed ;C-C for members and forces & MWFRS for reactions shown; Lumber DOL=1.60 plate grip DOL=1.60
2) This truss has been designed for a 10.0 psf bottom chord live load nonconcurrent with any other live loads.
3) * This truss has been designed for a live load of 20.0psf on the bottom chord in all areas with a clearance greater than 6-0-0 between the bottom chord and any other members.
4) Refer to girder(s) for truss to truss connections.
5) Provide mechanical connection (by others) of truss to bearing plate capable of withstanding 100 lb uplift at joint(s) 2, 1.

October 22,2018

ENGINEERING BY TRENCO A MiTek Affiliate
818 Soundside Road
Edenton, NC 27932

Job	Truss	Truss Type	Qty	Ply	Jason Price / Campbell Pointe Bldg. 25
J0918-4429	J03A	JACK-OPEN	2	1	E12341621 Job Reference (optional)

Comtech, Inc., Fayetteville, NC 28309

8.130 s Mar 11 2018 MiTek Industries, Inc. Mon Oct 22 15:13:29 2018 Page 1
ID:ZzXTyMvxB55ZLn?FA7qN0rzLZck-5sURG?kzVDSkX1jeRMajV3IStw9dLu1fyu0uEIyQq4K

Scale = 1:12.8

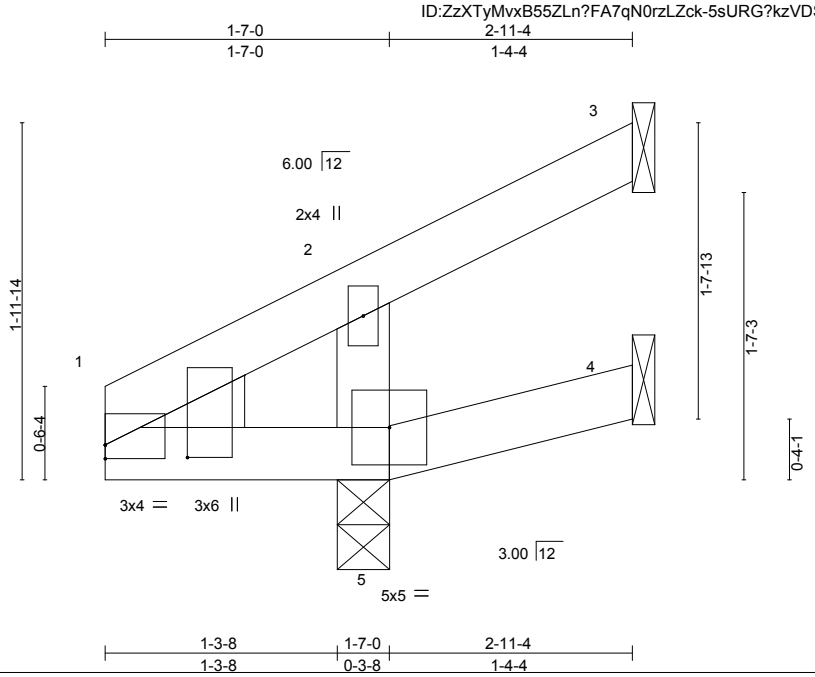

Plate Offsets (X,Y)-- [1:0-0-0,0-0-15], [1:0-0-13,0-5-8]

LOADING (psf)		SPACING- 2-0-0		CSI.		DEFL. in (loc) l/defl L/d		PLATES GRIP
TCLL	20.0	Plate Grip DOL	1.15	TC	0.19	Vert(LL) -0.00 5 >999 360		MT20 244/190
TCDL	10.0	Lumber DOL	1.15	BC	0.03	Vert(TL) -0.00 5 >999 240		
BCLL	0.0 *	Rep Stress Incr	YES	WB	0.06	Horz(TL) -0.03 3 n/a n/a		
BCDL	10.0	Code IRC2009/TPI2007		Matrix-P		Wind(LL) 0.00 5 **** 240		Weight: 12 lb FT = 20%

LUMBER-
TOP CHORD 2x4 SP No.1
BOT CHORD 2x4 SP No.1
WEBS 2x4 SP No.3
WEDGE
Left: 2x4 SP No.3

BRACING-
TOP CHORD Structural wood sheathing directly applied or 2-11-4 oc purlins.
BOT CHORD Rigid ceiling directly applied or 10-0-0 oc bracing.

REACTIONS. (lb/size) 3=-39/Mechanical, 5=256/0-3-8, 4=13/Mechanical
Max Horz 5=53(LC 6)
Max Uplift 3=-45(LC 2), 5=-63(LC 6)
Max Grav 3=3(LC 4), 5=256(LC 1), 4=26(LC 2)

FORCES. (lb) - Max. Comp./Max. Ten. - All forces 250 (lb) or less except when shown.

NOTES-
1) Wind: ASCE 7-05; 100mph; TCDL=6.0psf; BCDL=5.0psf; h=15ft; Cat. II; Exp C; enclosed; MWFRS (low-rise) and C-C Exterior(2) zone; cantilever left exposed ;C-C for members and forces & MWFRS for reactions shown; Lumber DOL=1.60 plate grip DOL=1.60
2) This truss has been designed for a 10.0 psf bottom chord live load nonconcurrent with any other live loads.
3) * This truss has been designed for a live load of 20.0psf on the bottom chord in all areas with a clearance greater than 6-0-0 between the bottom chord and any other members.
4) Refer to girder(s) for truss to truss connections.
5) Provide mechanical connection (by others) of truss to bearing plate capable of withstanding 100 lb uplift at joint(s) 3, 5.

October 22,2018

ENGINEERING BY TRENCO A MiTek Affiliate
818 Soundside Road
Edenton, NC 27932

Job	Truss	Truss Type	Qty	Ply	Jason Price / Campbell Pointe Bldg. 25
J0918-4429	J06	JACK-OPEN	20	1	E12341622 Job Reference (optional)

Comtech, Inc., Fayetteville, NC 28309 8.130 s Mar 11 2018 MiTek Industries, Inc. Mon Oct 22 15:13:30 2018 Page 1
ID:ZzXTyMvxB55ZLn?FA7qN0rzLZck-Z22qTLlbGXab9BIr_36y1HqcRKTR4KCpAYlRmkyQq4J

Scale = 1:26.3

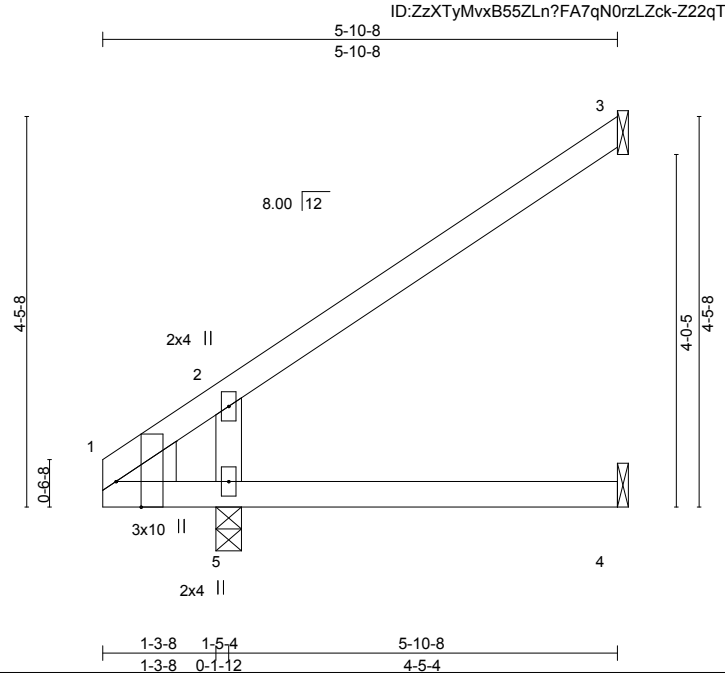

Plate Offsets (X,Y)-- [1:0-0-10,0-0-14], [1:0-1-3,0-5-5], [1:0-3-8,Edge]

LOADING (psf)			SPACING- 2-0-0		CSI.		DEFL.	in	(loc)	l/defl	L/d	PLATES	GRIP
TCLL	20.0		Plate Grip DOL	1.15	TC	0.20	Vert(LL)	-0.01	4-5	>999	360	MT20	244/190
TCDL	10.0		Lumber DOL	1.15	BC	0.18	Vert(TL)	-0.03	4-5	>999	240		
BCLL	0.0	*	Rep Stress Incr	YES	WB	0.07	Horz(TL)	-0.04	3	n/a	n/a		
BCDL	10.0		Code IRC2009/TPI2007		Matrix-P		Wind(LL)	0.02	4-5	>999	240	Weight: 23 lb	FT = 20%

LUMBER-
TOP CHORD 2x4 SP No.1
BOT CHORD 2x4 SP No.1
WEBS 2x4 SP No.3
WEDGE
Left: 2x6 SP No.1

BRACING-
TOP CHORD Structural wood sheathing directly applied or 5-10-8 oc purlins.
BOT CHORD Rigid ceiling directly applied or 10-0-0 oc bracing.

REACTIONS. (lb/size) 3=113/Mechanical, 4=43/Mechanical, 5=309/0-3-8
Max Horz 5=132(LC 6)
Max Uplift 3=-76(LC 6), 5=-20(LC 6)
Max Grav 3=113(LC 1), 4=77(LC 2), 5=309(LC 1)

FORCES. (lb) - Max. Comp./Max. Ten. - All forces 250 (lb) or less except when shown.

NOTES-
1) Wind: ASCE 7-05; 100mph; TCDL=6.0psf; BCDL=5.0psf; h=15ft; Cat. II; Exp C; enclosed; MWFRS (low-rise) and C-C Exterior(2) zone; cantilever left exposed ;C-C for members and forces & MWFRS for reactions shown; Lumber DOL=1.60 plate grip DOL=1.60
2) This truss has been designed for a 10.0 psf bottom chord live load nonconcurrent with any other live loads.
3) * This truss has been designed for a live load of 20.0psf on the bottom chord in all areas with a clearance greater than 6-0-0 between the bottom chord and any other members.
4) Refer to girder(s) for truss to truss connections.
5) Provide mechanical connection (by others) of truss to bearing plate capable of withstanding 100 lb uplift at joint(s) 3, 5.

October 22,2018

ENGINEERING BY TRENCO A MiTek Affiliate
818 Soundside Road
Edenton, NC 27932

Job	Truss	Truss Type	Qty	Ply	Jason Price / Campbell Pointe Bldg. 25
J0918-4429	J06D	JACK-OPEN GIRDER	1	1	E12341623 Job Reference (optional)

Comtech, Inc., Fayetteville, NC 28309 — 8.130 s Mar 11 2018 MiTek Industries, Inc. Mon Oct 22 15:13:30 2018 Page 1

ID:ZzXTyMvxB55ZLn?FA7qN0rzLZck-Z22qTLlbGXab9Blr_36y1Hqe1KVN4LUpAYlRmkyQq4J

Scale = 1:13.1

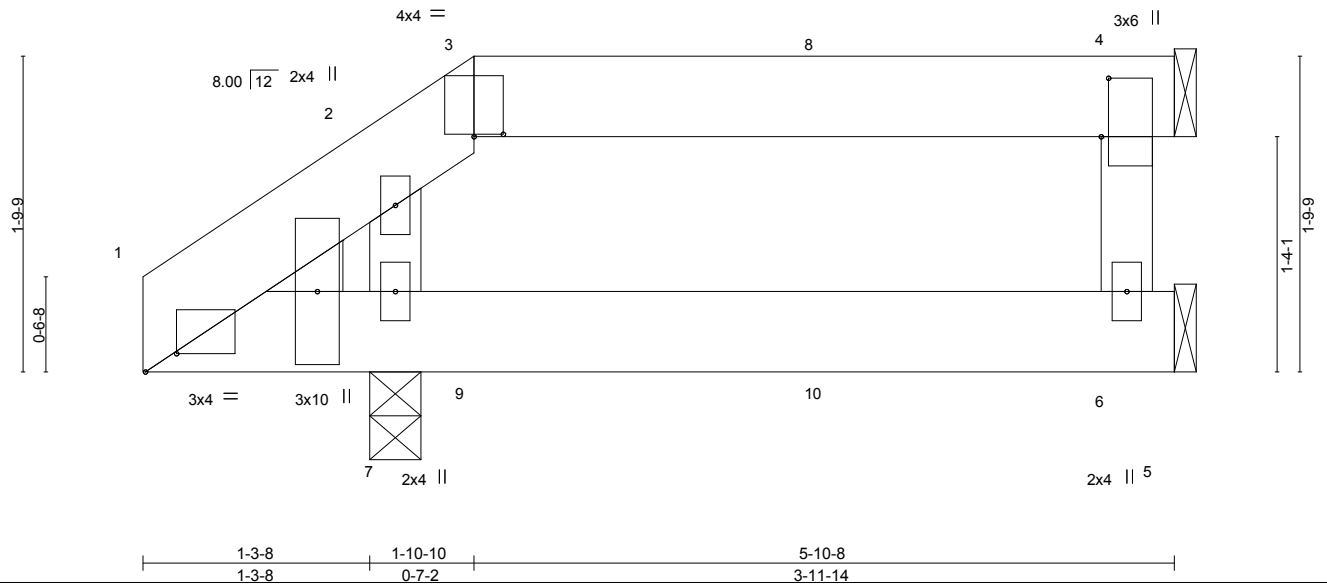

Plate Offsets (X,Y)-- [1:0-2-2,0-1-4], [3:0-2-0,0-0-3], [4:0-4-0,0-0-8]

LOADING (psf)		SPACING- 2-0-0		CSI.		DEFL.	in	(loc)	l/defl	L/d	PLATES	GRIP
TCLL	20.0	Plate Grip DOL	1.15	TC	0.10	Vert(LL)	-0.00	6-7	>999	360	MT20	244/190
TCDL	10.0	Lumber DOL	1.15	BC	0.06	Vert(TL)	-0.01	6-7	>999	240		
BCLL	0.0 *	Rep Stress Incr	NO	WB	0.05	Horz(TL)	0.01	4	n/a	n/a		
BCDL	10.0	Code IRC2009/TPI2007		Matrix-S		Wind(LL)	0.00	6-7	>999	240	Weight: 32 lb	FT = 20%

LUMBER-
TOP CHORD 2x6 SP No.1
BOT CHORD 2x6 SP No.1
WEBS 2x4 SP No.3
WEDGE
Left: 2x4 SP No.3

BRACING-
TOP CHORD Structural wood sheathing directly applied or 5-10-8 oc purlins.
BOT CHORD Rigid ceiling directly applied or 10-0-0 oc bracing.

REACTIONS. (lb/size) 7=318/0-3-8, 4=115/Mechanical, 6=47/Mechanical
Max Horz 7=43(LC 5)
Max Uplift 7=-81(LC 5), 4=-53(LC 3)
Max Grav 7=318(LC 1), 4=120(LC 10), 6=88(LC 2)

FORCES. (lb) - Max. Comp./Max. Ten. - All forces 250 (lb) or less except when shown.

NOTES-
1) Unbalanced roof live loads have been considered for this design.
2) Wind: ASCE 7-05; 100mph; TCDL=6.0psf; BCDL=5.0psf; h=15ft; Cat. II; Exp C; enclosed; MWFRS (low-rise); cantilever left exposed ; Lumber DOL=1.60 plate grip DOL=1.60
3) Provide adequate drainage to prevent water ponding.
4) This truss has been designed for a 10.0 psf bottom chord live load nonconcurrent with any other live loads.
5) * This truss has been designed for a live load of 20.0psf on the bottom chord in all areas with a clearance greater than 6-0-0 between the bottom chord and any other members.
6) Refer to girder(s) for truss to truss connections.
7) Provide mechanical connection (by others) of truss to bearing plate capable of withstanding 100 lb uplift at joint(s) 7, 4.
8) Gap between inside of top chord bearing and first diagonal or vertical web shall not exceed 0.500in.
9) Hanger(s) or other connection device(s) shall be provided sufficient to support concentrated load(s) 29 lb down and 27 lb up at 1-10-10, and 10 lb down and 27 lb up at 3-11-6 on top chord, and 7 lb down at 1-11-6, and 7 lb down at 3-11-6 on bottom chord. The design/selection of such connection device(s) is the responsibility of others.
10) In the LOAD CASE(S) section, loads applied to the face of the truss are noted as front (F) or back (B).

LOAD CASE(S) Standard
1) Dead + Roof Live (balanced): Lumber Increase=1.15, Plate Increase=1.15
Uniform Loads (plf)
Vert: 1-3=-60, 3-4=-60, 1-5=-20
Concentrated Loads (lb)
Vert: 3=-10(F) 8=-10(F) 9=-3(F) 10=-3(F)

October 22,2018

ENGINEERING BY TRENCO A MiTek Affiliate
818 Soundside Road
Edenton, NC 27932

Job	Truss	Truss Type	Qty	Ply	Jason Price / Campbell Pointe Bldg. 25
J0918-4429	J06E	JACK-OPEN	1	1	E12341624 Job Reference (optional)

Comtech, Inc., Fayetteville, NC 28309 8.130 s Mar 11 2018 MiTek Industries, Inc. Mon Oct 22 15:13:31 2018 Page 1
ID:ZzXTyMvxB55ZLn?FA7qN0rzLZck-1EcCghmD1qjSmLt1YndBaUNpCknPporyPCV?IByQq4I

Scale = 1:18.1

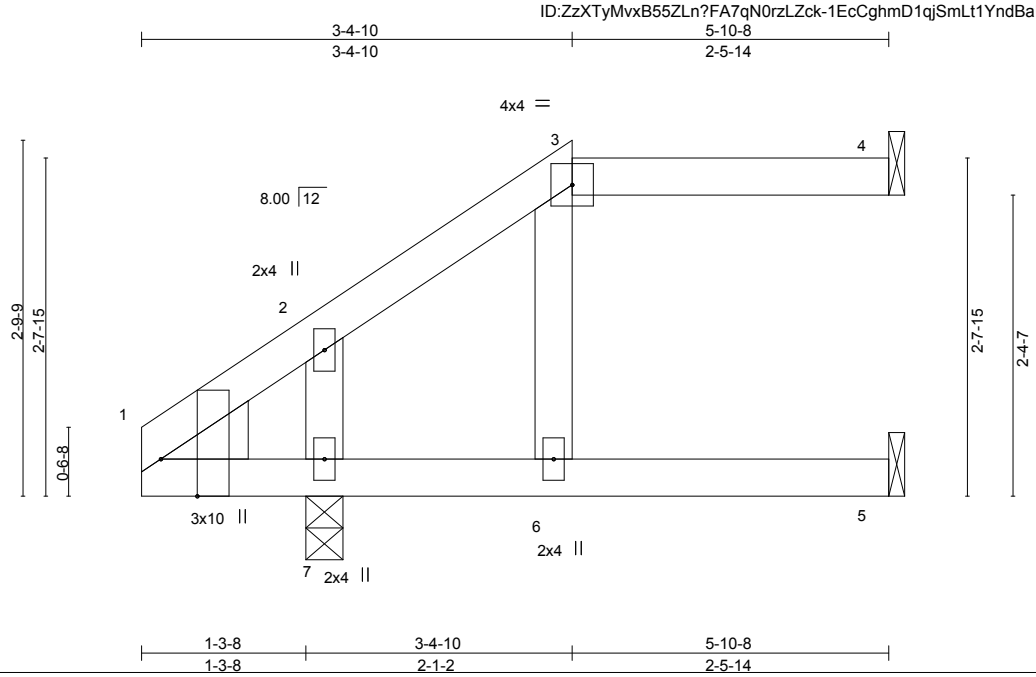

Plate Offsets (X,Y)-- [1:0-0-10,0-0-14], [1:0-1-3,0-5-5], [1:0-3-8,Edge]

LOADING (psf)		SPACING- 2-0-0		CSI.		DEFL. in (loc) l/defl L/d					PLATES	GRIP
TCLL	20.0	Plate Grip DOL	1.15	TC	0.07	Vert(LL)	-0.02	6	>999	360	MT20	244/190
TCDL	10.0	Lumber DOL	1.15	BC	0.26	Vert(TL)	-0.06	5-6	>851	240		
BCLL	0.0 *	Rep Stress Incr	YES	WB	0.04	Horz(TL)	0.08	4	n/a	n/a		
BCDL	10.0	Code IRC2009/TPI2007		Matrix-P		Wind(LL)	0.04	6	>999	240	Weight: 25 lb	FT = 20%

LUMBER-
TOP CHORD 2x4 SP No.1
BOT CHORD 2x4 SP No.1
WEBS 2x4 SP No.3
WEDGE
Left: 2x6 SP No.1

BRACING-
TOP CHORD Structural wood sheathing directly applied or 5-10-8 oc purlins.
BOT CHORD Rigid ceiling directly applied or 6-0-0 oc bracing.

REACTIONS. (lb/size) 4=73/Mechanical, 5=83/Mechanical, 7=309/0-3-8
Max Horz 7=77(LC 6)
Max Uplift 4=-31(LC 4), 5=-8(LC 5), 7=-52(LC 6)
Max Grav 4=73(LC 1), 5=93(LC 2), 7=309(LC 1)

FORCES. (lb) - Max. Comp./Max. Ten. - All forces 250 (lb) or less except when shown.

NOTES-
1) Unbalanced roof live loads have been considered for this design.
2) Wind: ASCE 7-05; 100mph; TCDL=6.0psf; BCDL=5.0psf; h=15ft; Cat. II; Exp C; enclosed; MWFRS (low-rise) and C-C Exterior(2) zone; cantilever left exposed ;C-C for members and forces & MWFRS for reactions shown; Lumber DOL=1.60 plate grip DOL=1.60
3) Provide adequate drainage to prevent water ponding.
4) This truss has been designed for a 10.0 psf bottom chord live load nonconcurrent with any other live loads.
5) * This truss has been designed for a live load of 20.0psf on the bottom chord in all areas with a clearance greater than 6-0-0 between the bottom chord and any other members.
6) Refer to girder(s) for truss to truss connections.
7) Provide mechanical connection (by others) of truss to bearing plate capable of withstanding 100 lb uplift at joint(s) 4, 5, 7.

October 22,2018

ENGINEERING BY TRENCO A MiTek Affiliate
818 Soundside Road
Edenton, NC 27932

Job	Truss	Truss Type	Qty	Ply	Jason Price / Campbell Pointe Bldg. 25
J0918-4429	J06F	JACK-OPEN	1	1	E12341625 Job Reference (optional)

Comtech, Inc., Fayetteville, NC 28309

8.130 s Mar 11 2018 MiTek Industries, Inc. Mon Oct 22 15:13:31 2018 Page 1
ID:ZzXTyMvxB55ZLn?FA7qN0rzLZck-1EcCghmD1qjSmLt1YndBaUNpykqmpoeyPCV?IByQq4I

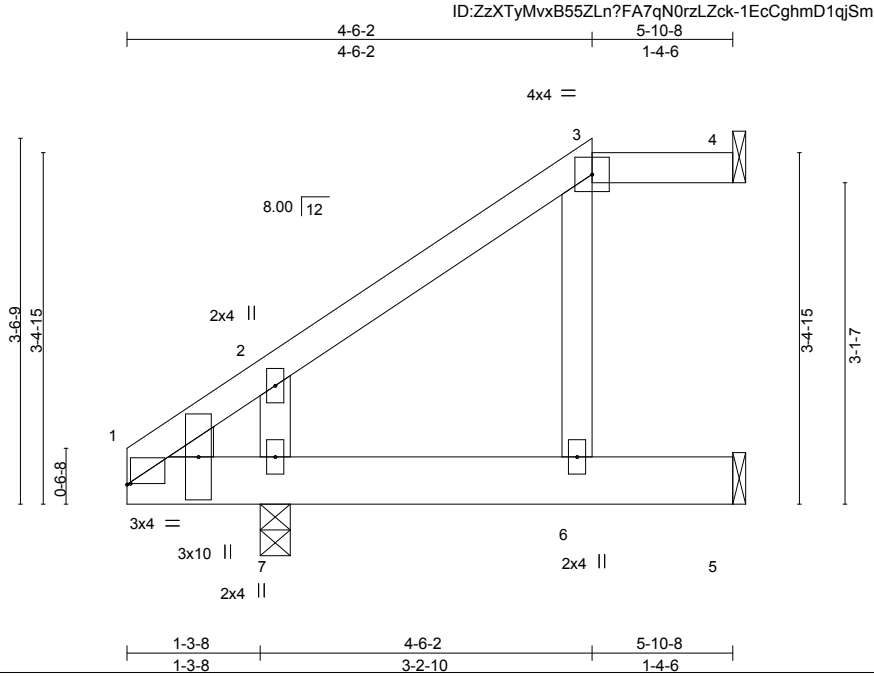

Plate Offsets (X,Y)-- [1:0-0-6,0-0-2]

LOADING (psf)			SPACING- 2-0-0		CSI.		DEFL. in	(loc)	l/defl	L/d	PLATES	GRIP
TCLL	20.0		Plate Grip DOL	1.15	TC	0.09	Vert(LL) -0.01	6	>999	360	MT20	244/190
TCDL	10.0		Lumber DOL	1.15	BC	0.11	Vert(TL) -0.02	6-7	>999	240		
BCLL	0.0	*	Rep Stress Incr	YES	WB	0.05	Horz(TL) 0.02	4	n/a	n/a		
BCDL	10.0		Code IRC2009/TPI2007		Matrix-P		Wind(LL) 0.01	6-7	>999	240	Weight: 30 lb	FT = 20%

LUMBER-
TOP CHORD 2x4 SP No.1
BOT CHORD 2x6 SP No.1
WEBS 2x4 SP No.3
WEDGE
Left: 2x4 SP No.3

BRACING-
TOP CHORD Structural wood sheathing directly applied or 5-10-8 oc purlins.
BOT CHORD Rigid ceiling directly applied or 6-0-0 oc bracing.

REACTIONS. (lb/size) 4=39/Mechanical, 5=117/Mechanical, 7=309/0-3-8
Max Horz 7=98(LC 6)
Max Uplift 4=-17(LC 4), 5=-30(LC 6), 7=-45(LC 6)

FORCES. (lb) - Max. Comp./Max. Ten. - All forces 250 (lb) or less except when shown.

NOTES-
1) Unbalanced roof live loads have been considered for this design.
2) Wind: ASCE 7-05; 100mph; TCDL=6.0psf; BCDL=5.0psf; h=15ft; Cat. II; Exp C; enclosed; MWFRS (low-rise) and C-C Exterior(2) zone; cantilever left exposed ;C-C for members and forces & MWFRS for reactions shown; Lumber DOL=1.60 plate grip DOL=1.60
3) Provide adequate drainage to prevent water ponding.
4) This truss has been designed for a 10.0 psf bottom chord live load nonconcurrent with any other live loads.
5) * This truss has been designed for a live load of 20.0psf on the bottom chord in all areas with a clearance greater than 6-0-0 between the bottom chord and any other members.
6) Refer to girder(s) for truss to truss connections.
7) Provide mechanical connection (by others) of truss to bearing plate capable of withstanding 100 lb uplift at joint(s) 4, 5, 7.

October 22,2018

ENGINEERING BY TRENCO A MiTek Affiliate
818 Soundside Road
Edenton, NC 27932

Job	Truss	Truss Type	Qty	Ply	Jason Price / Campbell Pointe Bldg. 25
J0918-4429	J06G	JACK-OPEN GIRDER	1	1	E12341626 Job Reference (optional)

Comtech, Inc., Fayetteville, NC 28309 — 8.130 s Mar 11 2018 MiTek Industries, Inc. Mon Oct 22 15:13:32 2018 Page 1

ID:ZzXTyMvxB55ZLn?FA7qN0rzLZck-WRAau1nro8rJOVRD6U8Q6iwzm7BzYDa6esEYqdyQq4H

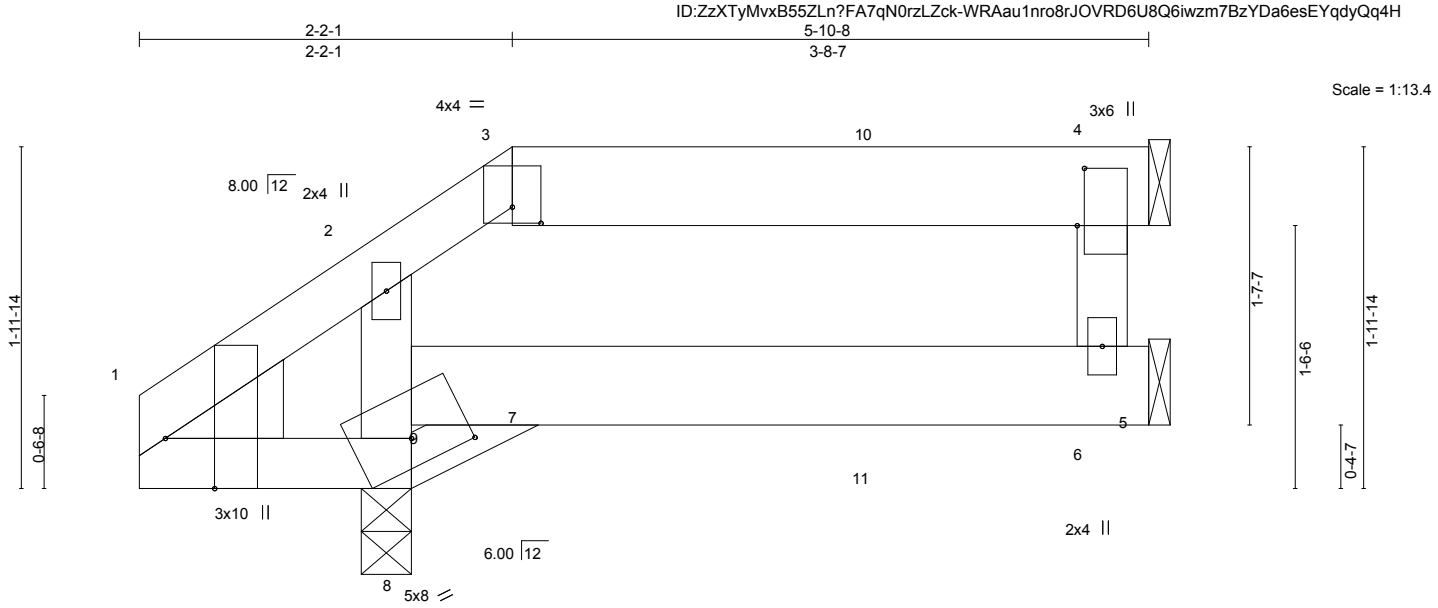

Plate Offsets (X,Y)-- [1:0-3-8,Edge], [1:0-1-3,0-5-5], [1:0-0-10,0-0-14], [3:0-2-0,0-1-2], [4:0-4-0,0-0-8], [7:0-3-8,0-1-12], [8:0-4-0,0-1-15], [9:0-1-4,0-2-7]

LOADING (psf)		SPACING- 2-0-0		CSI.		DEFL.	in	(loc)	l/defl	L/d	PLATES	GRIP
TCLL	20.0	Plate Grip DOL	1.15	TC	0.09	Vert(LL)	-0.00	6-7	>999	360	MT20	244/190
TCDL	10.0	Lumber DOL	1.15	BC	0.05	Vert(TL)	-0.00	6-7	>999	240		
BCLL	0.0 *	Rep Stress Incr	NO	WB	0.14	Horz(TL)	-0.01	4	n/a	n/a		
BCDL	10.0	Code IRC2009/TPI2007		Matrix-S		Wind(LL)	-0.00	7	>999	240	Weight: 31 lb	FT = 20%

LUMBER-

TOP CHORD 2x4 SP No.1 *Except*
3-4: 2x6 SP No.1
BOT CHORD 2x4 SP No.1 *Except*
5-9: 2x6 SP No.1
WEBS 2x4 SP No.3
WEDGE
Left: 2x6 SP No.1

BRACING-

TOP CHORD Structural wood sheathing directly applied or 5-10-8 oc purlins.
BOT CHORD Rigid ceiling directly applied or 6-0-0 oc bracing.

REACTIONS. (lb/size) 8=258/0-3-8, 6=28/Mechanical, 4=75/Mechanical
Max Horz 8=53(LC 16)
Max Uplift 8=-89(LC 5), 4=-66(LC 3)
Max Grav 8=258(LC 1), 6=73(LC 2), 4=76(LC 10)

FORCES. (lb) - Max. Comp./Max. Ten. - All forces 250 (lb) or less except when shown.

NOTES-

1) Unbalanced roof live loads have been considered for this design.
2) Wind: ASCE 7-05; 100mph; TCDL=6.0psf; BCDL=5.0psf; h=15ft; Cat. II; Exp C; enclosed; MWFRS (low-rise); cantilever left exposed ; Lumber DOL=1.60 plate grip DOL=1.60
3) Provide adequate drainage to prevent water ponding.
4) This truss has been designed for a 10.0 psf bottom chord live load nonconcurrent with any other live loads.
5) * This truss has been designed for a live load of 20.0psf on the bottom chord in all areas with a clearance greater than 6-0-0 between the bottom chord and any other members.
6) Refer to girder(s) for truss to truss connections.
7) Provide mechanical connection (by others) of truss to bearing plate capable of withstanding 100 lb uplift at joint(s) 8, 4.
8) Gap between inside of top chord bearing and first diagonal or vertical web shall not exceed 0.500in.
9) Hanger(s) or other connection device(s) shall be provided sufficient to support concentrated load(s) 18 lb down and 99 lb up at 2-2-1, and 26 lb down and 99 lb up at 4-3-14 on top chord, and at 2-3-14, and at 4-3-14 on bottom chord. The design/selection of such connection device(s) is the responsibility of others.
10) In the LOAD CASE(S) section, loads applied to the face of the truss are noted as front (F) or back (B).

LOAD CASE(S) Standard
1) Dead + Roof Live (balanced): Lumber Increase=1.15, Plate Increase=1.15
Uniform Loads (plf)
Vert: 1-3=-60, 3-4=-60, 1-8=-20, 7-8=-20, 5-7=-20
Concentrated Loads (lb)
Vert: 3=46(B) 10=46(B)

October 22,2018

ENGINEERING BY TRENCO A MiTek Affiliate
818 Soundside Road
Edenton, NC 27932

Job	Truss	Truss Type	Qty	Ply	Jason Price / Campbell Pointe Bldg. 25
J0918-4429	J06H	JACK-OPEN	1	1	E12341627 Job Reference (optional)

Comtech, Inc., Fayetteville, NC 28309 8.130 s Mar 11 2018 MiTek Industries, Inc. Mon Oct 22 15:13:33 2018 Page 1
ID:ZzXTyMvxB55ZLn?FA7qN0rzLZck-_dky5NnTZSzA0f0PgCfffvS8TXVOHhRFtW_5N3yQq4G

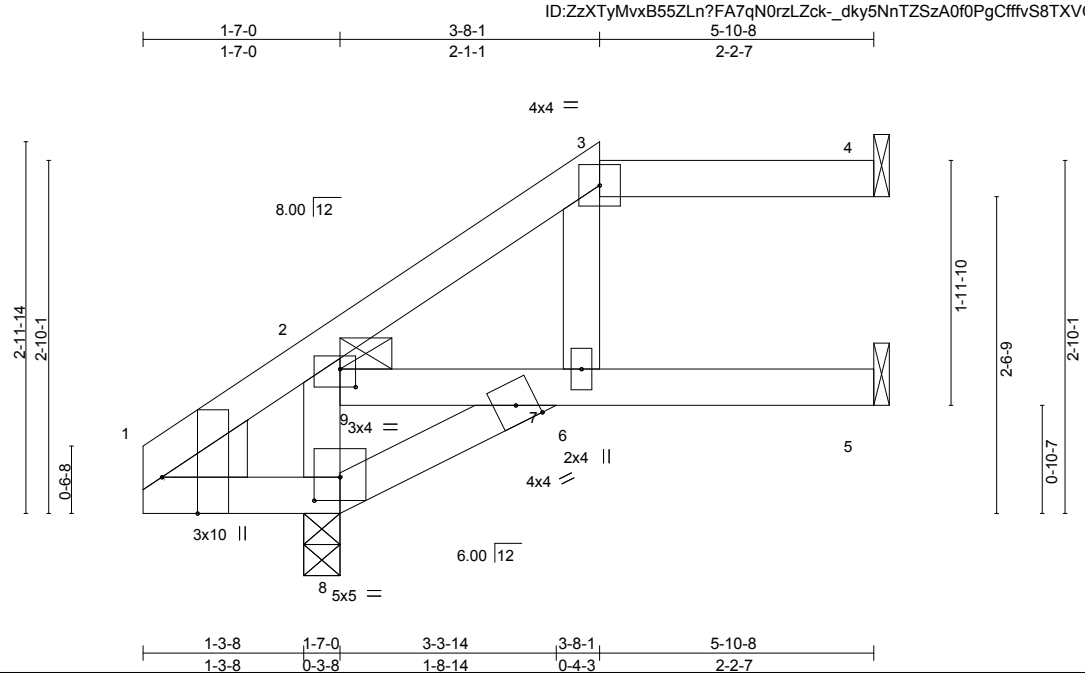

Plate Offsets (X,Y)-- [1:0-3-8,Edge], [1:0-1-3,0-5-5], [1:0-0-10,0-0-14], [2:0-1-12,0-1-3], [8:0-2-8,0-2-4], [9:0-0-0,0-1-12], [9:0-1-8,0-1-12]

LOADING (psf)			SPACING- 2-0-0	CSI.		DEFL. in (loc) l/defl L/d				PLATES GRIP
TCLL	20.0		Plate Grip DOL 1.15	TC	0.09	Vert(LL) -0.01 6 >999 360				MT20 244/190
TCDL	10.0		Lumber DOL 1.15	BC	0.17	Vert(TL) -0.04 6 >999 240				
BCLL	0.0	*	Rep Stress Incr YES	WB	0.10	Horz(TL) 0.05 4 n/a n/a				
BCDL	10.0		Code IRC2009/TPI2007	Matrix-S		Wind(LL) 0.02 6 >999 240				Weight: 27 lb FT = 20%

LUMBER-
TOP CHORD 2x4 SP No.1
BOT CHORD 2x4 SP No.1
WEBS 2x4 SP No.3
WEDGE
Left: 2x6 SP No.1

BRACING-
TOP CHORD Structural wood sheathing directly applied or 5-10-8 oc purlins.
BOT CHORD Rigid ceiling directly applied or 6-0-0 oc bracing, Except:
10-0-0 oc bracing: 5-6.

REACTIONS. All bearings Mechanical except (jt=length) 8=0-3-8, 8=0-3-8.
(lb) - Max Horz 8=83(LC 6)
Max Uplift All uplift 100 lb or less at joint(s) 4, 8, 5
Max Grav All reactions 250 lb or less at joint(s) 4, 5 except 8=320(LC 1), 8=320(LC 1)

FORCES. (lb) - Max. Comp./Max. Ten. - All forces 250 (lb) or less except when shown.

NOTES-
1) Unbalanced roof live loads have been considered for this design.
2) Wind: ASCE 7-05; 100mph; TCDL=6.0psf; BCDL=5.0psf; h=15ft; Cat. II; Exp C; enclosed; MWFRS (low-rise) and C-C Exterior(2) zone; cantilever left exposed ;C-C for members and forces & MWFRS for reactions shown; Lumber DOL=1.60 plate grip DOL=1.60
3) Provide adequate drainage to prevent water ponding.
4) This truss has been designed for a 10.0 psf bottom chord live load nonconcurrent with any other live loads.
5) * This truss has been designed for a live load of 20.0psf on the bottom chord in all areas with a clearance greater than 6-0-0 between the bottom chord and any other members.
6) Refer to girder(s) for truss to truss connections.
7) Provide mechanical connection (by others) of truss to bearing plate capable of withstanding 100 lb uplift at joint(s) 4, 8, 5.

October 22,2018

ENGINEERING BY TRENCO A MiTek Affiliate
818 Soundside Road
Edenton, NC 27932

Job	Truss	Truss Type	Qty	Ply	Jason Price / Campbell Pointe Bldg. 25
J0918-4429	J06I	JACK-OPEN	1	1	E12341628 Job Reference (optional)

Comtech, Inc., Fayetteville, NC 28309

8.130 s Mar 11 2018 MiTek Industries, Inc. Mon Oct 22 15:13:33 2018 Page 1
ID:ZzXTyMvxB55ZLn?FA7qN0rzLZck-_dky5NnTZSzA0f0PgCfffvS8OXUsHi6FtW_5N3yQq4G

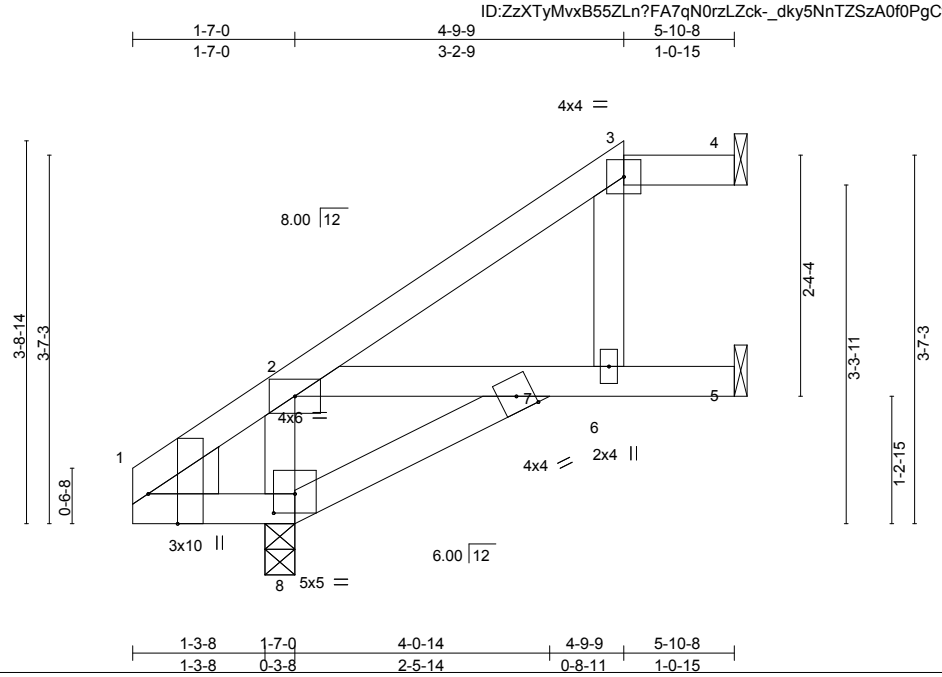

Plate Offsets (X,Y)-- [1:0-3-8,Edge], [1:0-1-3,0-5-5], [1:0-0-10,0-0-14], [8:0-2-8,0-2-4]

LOADING (psf)		SPACING- 2-0-0	CSI.		DEFL. in (loc) l/defl L/d	PLATES GRIP
TCLL 20.0		Plate Grip DOL 1.15	TC 0.09		Vert(LL) -0.02 7 >999 360	MT20 244/190
TCDL 10.0		Lumber DOL 1.15	BC 0.20		Vert(TL) -0.04 7 >999 240	
BCLL 0.0	*	Rep Stress Incr YES	WB 0.06		Horz(TL) 0.05 4 n/a n/a	
BCDL 10.0		Code IRC2009/TPI2007	Matrix-P		Wind(LL) 0.03 7 >999 240	Weight: 29 lb FT = 20%

LUMBER-
TOP CHORD 2x4 SP No.1
BOT CHORD 2x4 SP No.1
WEBS 2x4 SP No.3
WEDGE
Left: 2x6 SP No.1

BRACING-
TOP CHORD Structural wood sheathing directly applied or 5-10-8 oc purlins.
BOT CHORD Rigid ceiling directly applied or 6-0-0 oc bracing, Except:
10-0-0 oc bracing: 5-6.

REACTIONS. All bearings Mechanical except (jt=length) 8=0-3-8, 8=0-3-8.
(lb) - Max Horz 8=107(LC 6)
Max Uplift All uplift 100 lb or less at joint(s) 4, 8, 5
Max Grav All reactions 250 lb or less at joint(s) 4, 5 except 8=320(LC 1), 8=320(LC 1)

FORCES. (lb) - Max. Comp./Max. Ten. - All forces 250 (lb) or less except when shown.
WEBS 2-8=-267/185

NOTES-
1) Unbalanced roof live loads have been considered for this design.
2) Wind: ASCE 7-05; 100mph; TCDL=6.0psf; BCDL=5.0psf; h=15ft; Cat. II; Exp C; enclosed; MWFRS (low-rise) and C-C Exterior(2) zone; cantilever left exposed ;C-C for members and forces & MWFRS for reactions shown; Lumber DOL=1.60 plate grip DOL=1.60
3) Provide adequate drainage to prevent water ponding.
4) This truss has been designed for a 10.0 psf bottom chord live load nonconcurrent with any other live loads.
5) * This truss has been designed for a live load of 20.0psf on the bottom chord in all areas with a clearance greater than 6-0-0 between the bottom chord and any other members.
6) Refer to girder(s) for truss to truss connections.
7) Provide mechanical connection (by others) of truss to bearing plate capable of withstanding 100 lb uplift at joint(s) 4, 8, 5.

October 22,2018

ENGINEERING BY TRENCO A MiTek Affiliate
818 Soundside Road
Edenton, NC 27932

Job	Truss	Truss Type	Qty	Ply	Jason Price / Campbell Pointe Bldg. 25
J0918-4429	J06J	JACK-OPEN	1	1	E12341629 Job Reference (optional)

Comtech, Inc., Fayetteville, NC 28309

8.130 s Mar 11 2018 MiTek Industries, Inc. Mon Oct 22 15:13:34 2018 Page 1
ID:ZzXTyMvxB55ZLn?FA7qN0rzLZck-SpHKJio6Kl51dpbcDvAuC7?Haxqf09HP5AjfvVyQq4F

1-7-0 | 3-7-0 | 5-10-8
1-7-0 | 2-0-0 | 2-3-8

Scale = 1:25.2

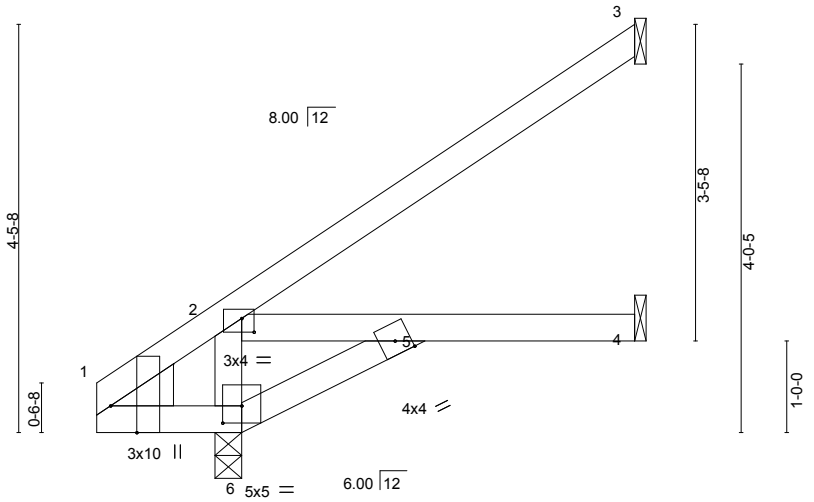

1-3-8 | 1-7-0 | 3-7-0 | 5-10-8
1-3-8 | 0-3-8 | 2-0-0 | 2-3-8

Plate Offsets (X,Y)-- [1:0-3-8,Edge], [1:0-1-3,0-5-5], [1:0-0-10,0-0-14], [2:0-1-10,0-1-13], [6:0-2-8,0-2-4]

LOADING (psf)		SPACING- 2-0-0		CSI.		DEFL. in (loc) l/defl L/d				PLATES	GRIP
TCLL	20.0	Plate Grip DOL	1.15	TC	0.19	Vert(LL) -0.02 5 >999 360				MT20	244/190
TCDL	10.0	Lumber DOL	1.15	BC	0.16	Vert(TL) -0.04 5 >999 240					
BCLL	0.0 *	Rep Stress Incr	YES	WB	0.06	Horz(TL) 0.03 3 n/a n/a					
BCDL	10.0	Code IRC2009/TPI2007		Matrix-P		Wind(LL) 0.02 5 >999 240				Weight: 26 lb	FT = 20%

LUMBER-
TOP CHORD 2x4 SP No.1
BOT CHORD 2x4 SP No.1
WEBS 2x4 SP No.3
WEDGE
Left: 2x6 SP No.1

BRACING-
TOP CHORD Structural wood sheathing directly applied or 5-10-8 oc purlins.
BOT CHORD Rigid ceiling directly applied or 6-0-0 oc bracing.

REACTIONS. (lb/size) 3=111/Mechanical, 6=353/0-3-8, 4=44/Mechanical
Max Horz 6=132(LC 6)
Max Uplift 3=-64(LC 6), 6=-8(LC 6), 4=-6(LC 6)
Max Grav 3=111(LC 1), 6=353(LC 1), 4=84(LC 2)

FORCES. (lb) - Max. Comp./Max. Ten. - All forces 250 (lb) or less except when shown.
WEBS 2-6=-303/161

NOTES-
1) Wind: ASCE 7-05; 100mph; TCDL=6.0psf; BCDL=5.0psf; h=15ft; Cat. II; Exp C; enclosed; MWFRS (low-rise) and C-C Exterior(2) zone; cantilever left exposed ;C-C for members and forces & MWFRS for reactions shown; Lumber DOL=1.60 plate grip DOL=1.60
2) This truss has been designed for a 10.0 psf bottom chord live load nonconcurrent with any other live loads.
3) * This truss has been designed for a live load of 20.0psf on the bottom chord in all areas with a clearance greater than 6-0-0 between the bottom chord and any other members.
4) Refer to girder(s) for truss to truss connections.
5) Provide mechanical connection (by others) of truss to bearing plate capable of withstanding 100 lb uplift at joint(s) 3, 6, 4.

NORTH CAROLINA PROFESSIONAL SEAL 28677 ENGINEER JOHN L. GALINSKI

October 22,2018

ENGINEERING BY TRENCO A MiTek Affiliate
818 Soundside Road
Edenton, NC 27932

Job	Truss	Truss Type	Qty	Ply	Jason Price / Campbell Pointe Bldg. 25
J0918-4429	J06K	JACK-OPEN	1	1	E12341630 Job Reference (optional)

Comtech, Inc., Fayetteville, NC 28309

8.130 s Mar 11 2018 MiTek Industries, Inc. Mon Oct 22 15:13:34 2018 Page 1
ID:ZzXTyMvxB55ZLn?FA7qN0rzLZck-SpHKJio6Kl51dpbcDvAuC7?Hbxq6040P5AjfvVyQq4F

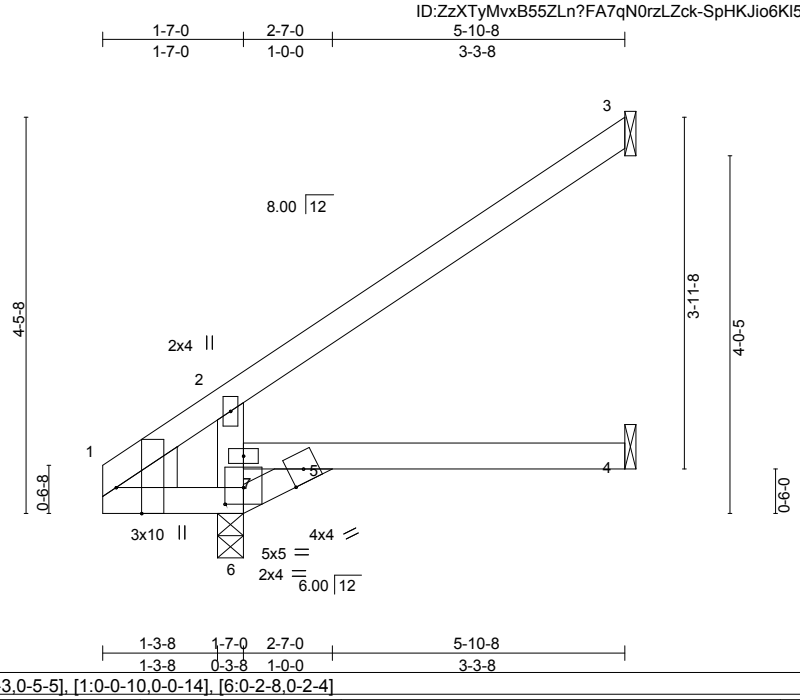

Plate Offsets (X,Y)-- [1:0-3-8,Edge], [1:0-1-3,0-5-5], [1:0-0-10,0-0-14], [6:0-2-8,0-2-4]

LOADING (psf)		SPACING- 2-0-0		CSI.		DEFL. in (loc) l/defl L/d		PLATES	GRIP
TCLL	20.0	Plate Grip DOL	1.15	TC	0.19	Vert(LL) -0.01 4-5 >999 360		MT20	244/190
TCDL	10.0	Lumber DOL	1.15	BC	0.14	Vert(TL) -0.03 4-5 >999 240			
BCLL	0.0 *	Rep Stress Incr	YES	WB	0.33	Horz(TL) -0.03 3 n/a n/a			
BCDL	10.0	Code IRC2009/TPI2007		Matrix-P		Wind(LL) 0.02 4-5 >999 240		Weight: 24 lb	FT = 20%

LUMBER-
TOP CHORD 2x4 SP No.1
BOT CHORD 2x4 SP No.1
WEBS 2x4 SP No.3
WEDGE
Left: 2x6 SP No.1

BRACING-
TOP CHORD Structural wood sheathing directly applied or 5-10-8 oc purlins.
BOT CHORD Rigid ceiling directly applied or 6-0-0 oc bracing.

REACTIONS. (lb/size) 3=110/Mechanical, 6=340/0-3-8, 4=38/Mechanical
Max Horz 6=132(LC 6)
Max Uplift 3=-69(LC 6), 6=-14(LC 6), 4=-4(LC 6)
Max Grav 3=110(LC 1), 6=340(LC 1), 4=73(LC 2)

FORCES. (lb) - Max. Comp./Max. Ten. - All forces 250 (lb) or less except when shown.
BOT CHORD 5-6=-308/23, 5-7=-19/273
WEBS 6-7=-290/178, 2-7=-255/146

NOTES-
1) Wind: ASCE 7-05; 100mph; TCDL=6.0psf; BCDL=5.0psf; h=15ft; Cat. II; Exp C; enclosed; MWFRS (low-rise) and C-C Exterior(2) zone; cantilever left exposed ;C-C for members and forces & MWFRS for reactions shown; Lumber DOL=1.60 plate grip DOL=1.60
2) This truss has been designed for a 10.0 psf bottom chord live load nonconcurrent with any other live loads.
3) * This truss has been designed for a live load of 20.0psf on the bottom chord in all areas with a clearance greater than 6-0-0 between the bottom chord and any other members.
4) Refer to girder(s) for truss to truss connections.
5) Provide mechanical connection (by others) of truss to bearing plate capable of withstanding 100 lb uplift at joint(s) 3, 6, 4.

October 22,2018

ENGINEERING BY TRENCO A MiTek Affiliate
818 Soundside Road
Edenton, NC 27932

Job	Truss	Truss Type	Qty	Ply	Jason Price / Campbell Pointe Bldg. 25
J0918-4429	J06L	JACK-OPEN	1	1	E12341631 Job Reference (optional)

Comtech, Inc., Fayetteville, NC 28309 — 8.130 s Mar 11 2018 MiTek Industries, Inc. Mon Oct 22 15:13:35 2018 Page 1

ID:ZzXTyMvxB55ZLn?FA7qN0rzLZck-w0rjW2pk53DuFyAondh7kKYSKLAOIXQYKqTCRyyQq4E

1-7-0 | 2-7-14 | 5-10-8
1-7-0 | 1-0-14 | 3-2-10

Scale = 1:25.9

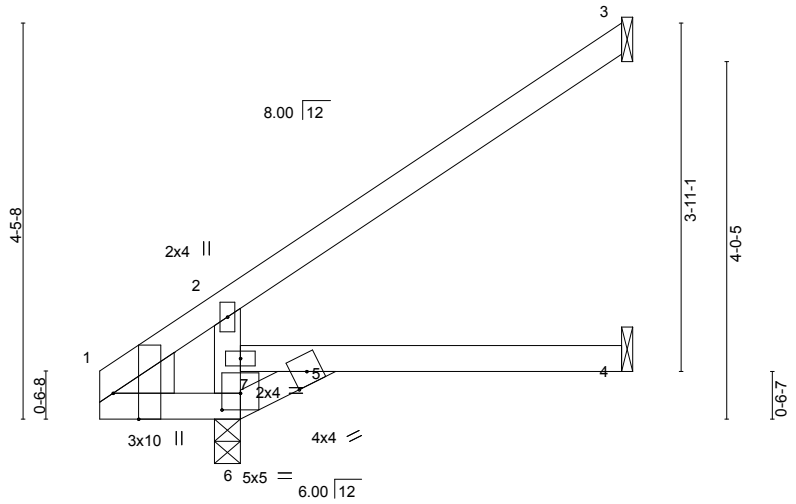

1-3-8 | 1-7-0 | 2-7-14 | 5-10-8
1-3-8 | 0-3-8 | 1-0-14 | 3-2-10

Plate Offsets (X,Y)-- [1:0-3-8,Edge], [1:0-1-3,0-5-5], [1:0-0-10,0-0-14], [6:0-2-8,0-2-4]

LOADING (psf)			SPACING- 2-0-0	CSI.		DEFL. in	(loc)	l/defl	L/d	PLATES	GRIP
TCLL	20.0		Plate Grip DOL 1.15	TC	0.19	Vert(LL) -0.01	4-5	>999	360	MT20	244/190
TCDL	10.0		Lumber DOL 1.15	BC	0.13	Vert(TL) -0.03	4-5	>999	240		
BCLL	0.0	*	Rep Stress Incr YES	WB	0.32	Horz(TL) -0.03	3	n/a	n/a		
BCDL	10.0		Code IRC2009/TPI2007	Matrix-P		Wind(LL) 0.02	4-5	>999	240	Weight: 24 lb	FT = 20%

LUMBER-
TOP CHORD 2x4 SP No.1
BOT CHORD 2x4 SP No.1
WEBS 2x4 SP No.3
WEDGE
Left: 2x6 SP No.1

BRACING-
TOP CHORD Structural wood sheathing directly applied or 5-10-8 oc purlins.
BOT CHORD Rigid ceiling directly applied or 6-0-0 oc bracing.

REACTIONS. (lb/size) 3=110/Mechanical, 6=341/0-3-8, 4=38/Mechanical
Max Horz 6=132(LC 6)
Max Uplift 3=-69(LC 6), 6=-14(LC 6), 4=-4(LC 6)
Max Grav 3=110(LC 1), 6=341(LC 1), 4=73(LC 2)

FORCES. (lb) - Max. Comp./Max. Ten. - All forces 250 (lb) or less except when shown.
BOT CHORD 5-6=-295/23, 5-7=-18/261
WEBS 6-7=-291/179, 2-7=-254/147

NOTES-
1) Wind: ASCE 7-05; 100mph; TCDL=6.0psf; BCDL=5.0psf; h=15ft; Cat. II; Exp C; enclosed; MWFRS (low-rise) and C-C Exterior(2) zone; cantilever left exposed ;C-C for members and forces & MWFRS for reactions shown; Lumber DOL=1.60 plate grip DOL=1.60
2) This truss has been designed for a 10.0 psf bottom chord live load nonconcurrent with any other live loads.
3) * This truss has been designed for a live load of 20.0psf on the bottom chord in all areas with a clearance greater than 6-0-0 between the bottom chord and any other members.
4) Refer to girder(s) for truss to truss connections.
5) Provide mechanical connection (by others) of truss to bearing plate capable of withstanding 100 lb uplift at joint(s) 3, 6, 4.

October 22,2018

ENGINEERING BY TRENCO A MiTek Affiliate
818 Soundside Road
Edenton, NC 27932

Job	Truss	Truss Type	Qty	Ply	Jason Price / Campbell Pointe Bldg. 25
J0918-4429	J06M	JACK-OPEN	1	1	E12341632 Job Reference (optional)

Comtech, Inc., Fayetteville, NC 28309

8.130 s Mar 11 2018 MiTek Industries, Inc. Mon Oct 22 15:13:35 2018 Page 1
ID:ZzXTyMvxB55ZLn?FA7qN0rzLZck-w0rjW2pk53DuFyAondh7kKYSJLAnlcXYKqTCRyyQq4E

Scale = 1:25.2

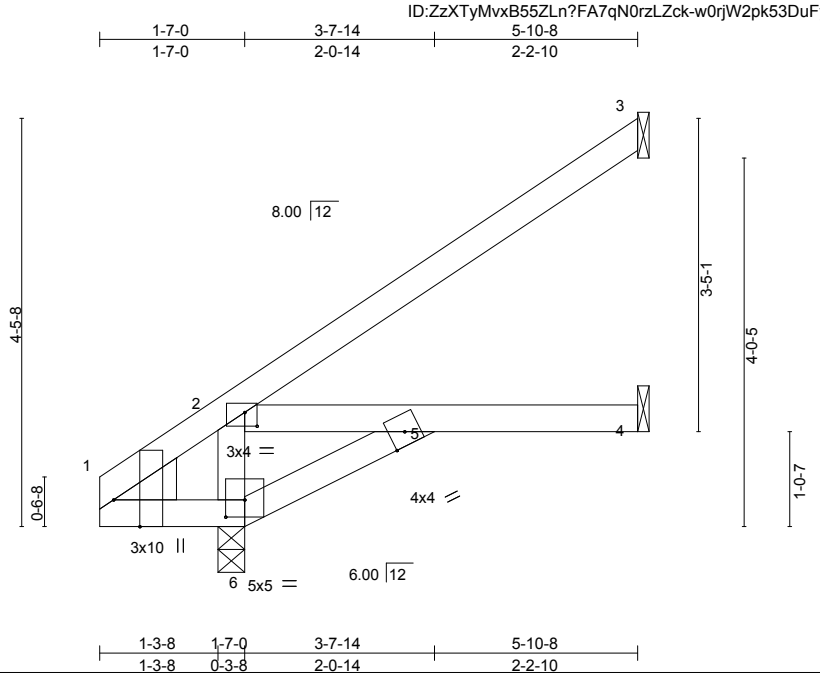

Plate Offsets (X,Y)-- [1:0-3-8,Edge], [1:0-1-3,0-5-5], [1:0-0-10,0-0-14], [2:0-1-10,0-1-13], [6:0-2-8,0-2-4]

LOADING (psf)		SPACING- 2-0-0		CSI.		DEFL. in (loc) l/defl L/d					PLATES	GRIP
TCLL	20.0	Plate Grip DOL	1.15	TC	0.19	Vert(LL)	-0.02	5	>999	360	MT20	244/190
TCDL	10.0	Lumber DOL	1.15	BC	0.17	Vert(TL)	-0.05	5	>999	240		
BCLL	0.0 *	Rep Stress Incr	YES	WB	0.06	Horz(TL)	0.03	3	n/a	n/a		
BCDL	10.0	Code IRC2009/TPI2007		Matrix-P		Wind(LL)	0.02	5	>999	240	Weight: 26 lb	FT = 20%

LUMBER-
TOP CHORD 2x4 SP No.1
BOT CHORD 2x4 SP No.1
WEBS 2x4 SP No.3
WEDGE
Left: 2x6 SP No.1

BRACING-
TOP CHORD Structural wood sheathing directly applied or 5-10-8 oc purlins.
BOT CHORD Rigid ceiling directly applied or 6-0-0 oc bracing.

REACTIONS. (lb/size) 3=110/Mechanical, 6=353/0-3-8, 4=45/Mechanical
Max Horz 6=132(LC 6)
Max Uplift 3=-63(LC 6), 6=-7(LC 6), 4=-6(LC 6)
Max Grav 3=110(LC 1), 6=353(LC 1), 4=85(LC 2)

FORCES. (lb) - Max. Comp./Max. Ten. - All forces 250 (lb) or less except when shown.
WEBS 2-6=-303/161

NOTES-
1) Wind: ASCE 7-05; 100mph; TCDL=6.0psf; BCDL=5.0psf; h=15ft; Cat. II; Exp C; enclosed; MWFRS (low-rise) and C-C Exterior(2) zone; cantilever left exposed ;C-C for members and forces & MWFRS for reactions shown; Lumber DOL=1.60 plate grip DOL=1.60
2) This truss has been designed for a 10.0 psf bottom chord live load nonconcurrent with any other live loads.
3) * This truss has been designed for a live load of 20.0psf on the bottom chord in all areas with a clearance greater than 6-0-0 between the bottom chord and any other members.
4) Refer to girder(s) for truss to truss connections.
5) Provide mechanical connection (by others) of truss to bearing plate capable of withstanding 100 lb uplift at joint(s) 3, 6, 4.

October 22,2018

ENGINEERING BY TRENCO A MiTek Affiliate
818 Soundside Road
Edenton, NC 27932

Job	Truss	Truss Type	Qty	Ply	Jason Price / Campbell Pointe Bldg. 25
J0918-4429	J06N	JACK-OPEN	1	1	E12341633 Job Reference (optional)

Comtech, Inc., Fayetteville, NC 28309 8.130 s Mar 11 2018 MiTek Industries, Inc. Mon Oct 22 15:13:36 2018 Page 1
ID:ZzXTyMvxB55ZLn?FA7qN0rzLZck-OCP5kOqMrNLlt6l_LKDMHY4eqlX2U3yhZUCmzOyQq4D

1-7-0 | 5-5-4 | 5-10-8
1-7-0 | 3-10-4 | 0-5-4

Scale = 1:25.2

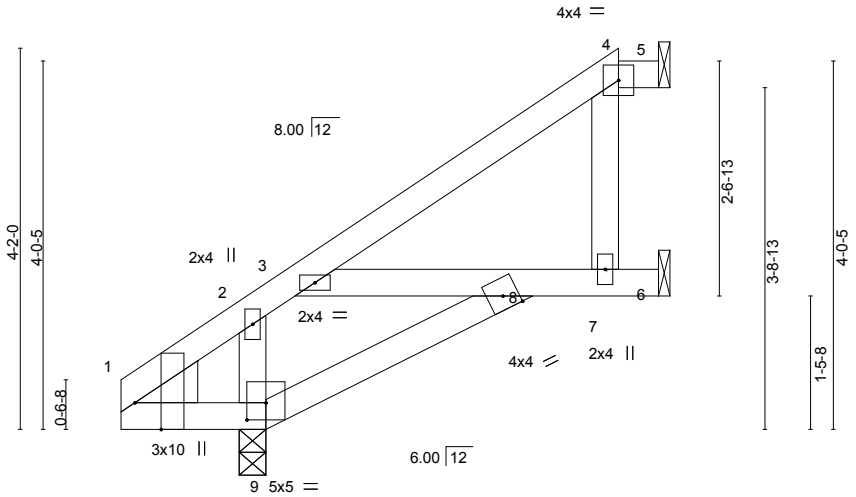

1-3-8 | 1-7-0 | 4-6-0 | 5-5-4 | 5-10-8
1-3-8 | 0-3-8 | 2-11-0 | 0-11-4 | 0-5-4

Plate Offsets (X,Y)-- [1:0-3-8,Edge], [1:0-1-3,0-5-5], [1:0-0-10,0-0-14], [9:0-2-8,0-2-4]

LOADING (psf)		SPACING- 2-0-0	CSI.		DEFL. in (loc) l/defl L/d	PLATES GRIP
TCLL	20.0	Plate Grip DOL 1.15	TC	0.15	Vert(LL) -0.01 8 >999 360	MT20 244/190
TCDL	10.0	Lumber DOL 1.15	BC	0.11	Vert(TL) -0.02 3-8 >999 240	
BCLL	0.0 *	Rep Stress Incr YES	WB	0.05	Horz(TL) 0.01 5 n/a n/a	
BCDL	10.0	Code IRC2009/TPI2007	Matrix-S		Wind(LL) 0.02 3-8 >999 240	Weight: 30 lb FT = 20%

LUMBER-
TOP CHORD 2x4 SP No.1
BOT CHORD 2x4 SP No.1
WEBS 2x4 SP No.3
WEDGE
Left: 2x6 SP No.1

BRACING-
TOP CHORD Structural wood sheathing directly applied or 5-10-8 oc purlins.
BOT CHORD Rigid ceiling directly applied or 6-0-0 oc bracing, Except:
10-0-0 oc bracing: 6-7.

REACTIONS. All bearings Mechanical except (jt=length) 9=0-3-8, 9=0-3-8.
(lb) - Max Horz 9=121(LC 6)
Max Uplift All uplift 100 lb or less at joint(s) 5, 9, 6
Max Grav All reactions 250 lb or less at joint(s) 5, 6 except 9=320(LC 1), 9=320(LC 1)

FORCES. (lb) - Max. Comp./Max. Ten. - All forces 250 (lb) or less except when shown.

NOTES-
1) Unbalanced roof live loads have been considered for this design.
2) Wind: ASCE 7-05; 100mph; TCDL=6.0psf; BCDL=5.0psf; h=15ft; Cat. II; Exp C; enclosed; MWFRS (low-rise) and C-C Exterior(2) zone; cantilever left exposed ;C-C for members and forces & MWFRS for reactions shown; Lumber DOL=1.60 plate grip DOL=1.60
3) Provide adequate drainage to prevent water ponding.
4) This truss has been designed for a 10.0 psf bottom chord live load nonconcurrent with any other live loads.
5) * This truss has been designed for a live load of 20.0psf on the bottom chord in all areas with a clearance greater than 6-0-0 between the bottom chord and any other members.
6) Refer to girder(s) for truss to truss connections.
7) Provide mechanical connection (by others) of truss to bearing plate capable of withstanding 100 lb uplift at joint(s) 5, 9, 6.

October 22,2018

ENGINEERING BY TRENCO A MiTek Affiliate
818 Soundside Road
Edenton, NC 27932

Job	Truss	Truss Type	Qty	Ply	Jason Price / Campbell Pointe Bldg. 25
J0918-4429	J06O	JACK-OPEN	1	1	E12341634 Job Reference (optional)

Comtech, Inc., Fayetteville, NC 28309

8.130 s Mar 11 2018 MiTek Industries, Inc. Mon Oct 22 15:13:36 2018 Page 1
ID:ZzXTyMvxB55ZLn?FA7qN0rzLZck-OCP5kOqMrNLlt6l_LKDMHY4eQlWoU3HhZUCmzOyQq4D

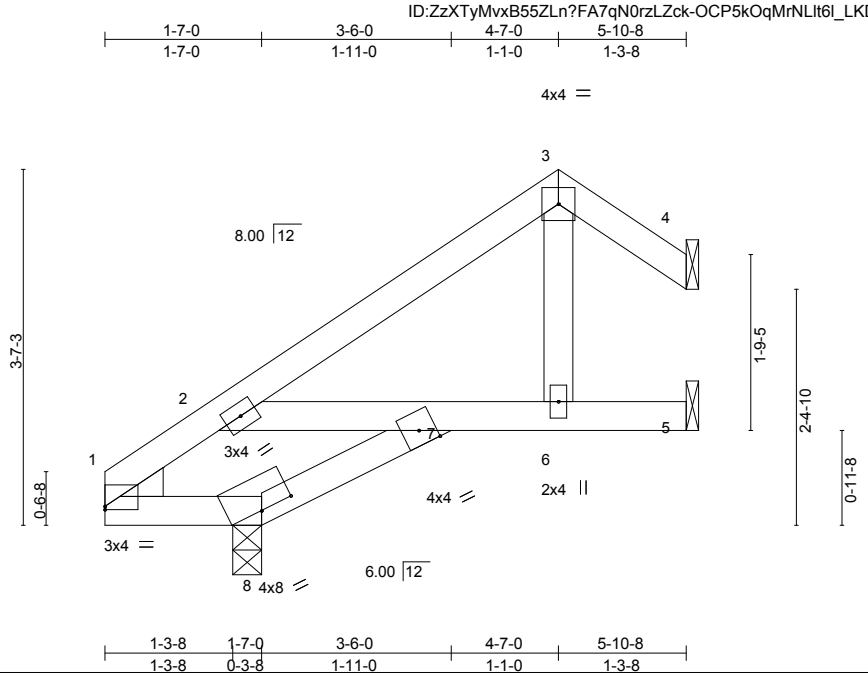

Plate Offsets (X,Y)-- [1:0-0-0,0-0-6], [8:0-4-0,0-0-1]

LOADING (psf)			SPACING- 2-0-0		CSI.		DEFL. in (loc) l/defl L/d					PLATES	GRIP
TCLL	20.0		Plate Grip DOL	1.15	TC	0.17	Vert(LL)	-0.02	2	>999	360	MT20	244/190
TCDL	10.0		Lumber DOL	1.15	BC	0.19	Vert(TL)	-0.05	2-7	>997	240		
BCLL	0.0	*	Rep Stress Incr	YES	WB	0.03	Horz(TL)	0.05	4	n/a	n/a		
BCDL	10.0		Code IRC2009/TPI2007		Matrix-S		Wind(LL)	0.03	2	>999	240	Weight: 27 lb	FT = 20%

LUMBER-
TOP CHORD 2x4 SP No.1
BOT CHORD 2x4 SP No.1
WEBS 2x4 SP No.3
WEDGE
Left: 2x4 SP No.3

BRACING-
TOP CHORD Structural wood sheathing directly applied or 5-10-8 oc purlins.
BOT CHORD Rigid ceiling directly applied or 6-0-0 oc bracing.

REACTIONS. (lb/size) 4=39/Mechanical, 8=320/0-3-8, 5=106/Mechanical
Max Horz 8=89(LC 6)
Max Uplift 4=-16(LC 7), 8=-56(LC 6), 5=-22(LC 6)
Max Grav 4=47(LC 11), 8=320(LC 1), 5=106(LC 1)

FORCES. (lb) - Max. Comp./Max. Ten. - All forces 250 (lb) or less except when shown.

NOTES-
1) Unbalanced roof live loads have been considered for this design.
2) Wind: ASCE 7-05; 100mph; TCDL=6.0psf; BCDL=5.0psf; h=15ft; Cat. II; Exp C; enclosed; MWFRS (low-rise) and C-C Exterior(2) zone; cantilever left exposed ;C-C for members and forces & MWFRS for reactions shown; Lumber DOL=1.60 plate grip DOL=1.60
3) This truss has been designed for a 10.0 psf bottom chord live load nonconcurrent with any other live loads.
4) * This truss has been designed for a live load of 20.0psf on the bottom chord in all areas with a clearance greater than 6-0-0 between the bottom chord and any other members.
5) Refer to girder(s) for truss to truss connections.
6) Provide mechanical connection (by others) of truss to bearing plate capable of withstanding 100 lb uplift at joint(s) 4, 8, 5.

October 22,2018

ENGINEERING BY TRENCO A MiTek Affiliate
818 Soundside Road
Edenton, NC 27932

Job	Truss	Truss Type	Qty	Ply	Jason Price / Campbell Pointe Bldg. 25
J0918-4429	J06P	JACK-OPEN	1	1	E12341635 Job Reference (optional)

Comtech, Inc., Fayetteville, NC 28309

8.130 s Mar 11 2018 MiTek Industries, Inc. Mon Oct 22 15:13:37 2018 Page 1
ID:ZzXTyMvxB55ZLn?FA7qN0rzLZck-sOzTxkr_cgTcUGKBv1kbpldpT8rPDWUrn8yJWqyQq4C

Scale: 1/2"=1'

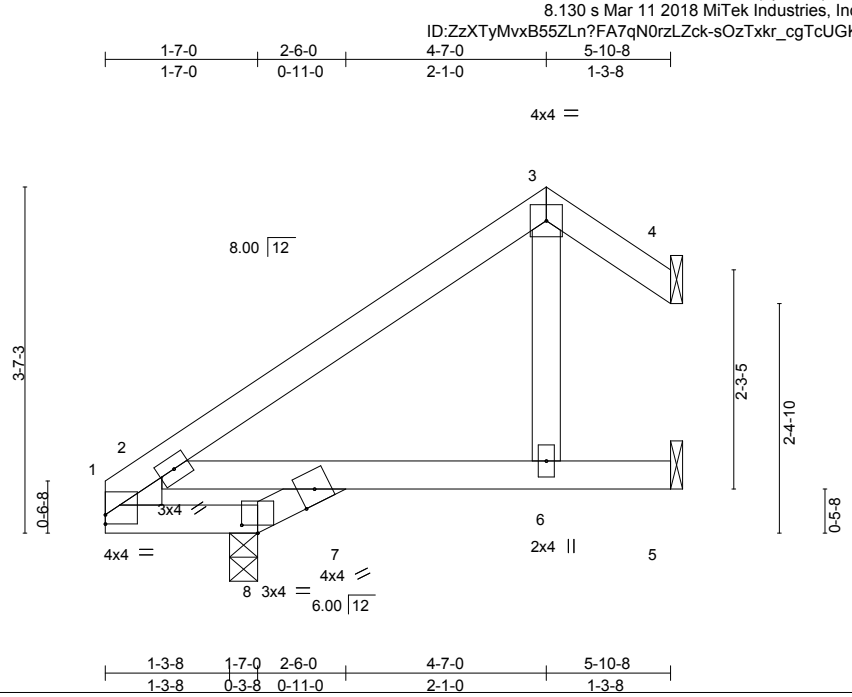

Plate Offsets (X,Y)-- [1:0-0-0,0-1-2], [8:0-2-0,0-1-0]

LOADING (psf)		SPACING- 2-0-0		CSI.		DEFL. in (loc) l/defl L/d		PLATES GRIP
TCLL 20.0		Plate Grip DOL 1.15		TC 0.15		Vert(LL) -0.01 6 >999 360		MT20 244/190
TCDL 10.0		Lumber DOL 1.15		BC 0.23		Vert(TL) -0.03 6-7 >999 240		
BCLL 0.0	*	Rep Stress Incr YES		WB 0.03		Horz(TL) 0.05 4 n/a n/a		
BCDL 10.0		Code IRC2009/TPI2007		Matrix-S		Wind(LL) 0.02 6-7 >999 240		Weight: 27 lb FT = 20%

LUMBER-
TOP CHORD 2x4 SP No.1
BOT CHORD 2x4 SP No.1
WEBS 2x4 SP No.3
WEDGE
Left: 2x4 SP No.3

BRACING-
TOP CHORD Structural wood sheathing directly applied or 5-10-8 oc purlins.
BOT CHORD Rigid ceiling directly applied or 6-0-0 oc bracing.

REACTIONS. (lb/size) 4=39/Mechanical, 8=320/0-3-8, 5=107/Mechanical
Max Horz 8=89(LC 6)
Max Uplift 4=-15(LC 7), 8=-56(LC 6), 5=-23(LC 6)
Max Grav 4=48(LC 11), 8=320(LC 1), 5=107(LC 1)

FORCES. (lb) - Max. Comp./Max. Ten. - All forces 250 (lb) or less except when shown.

NOTES-
1) Unbalanced roof live loads have been considered for this design.
2) Wind: ASCE 7-05; 100mph; TCDL=6.0psf; BCDL=5.0psf; h=15ft; Cat. II; Exp C; enclosed; MWFRS (low-rise) and C-C Exterior(2) zone; cantilever left exposed ;C-C for members and forces & MWFRS for reactions shown; Lumber DOL=1.60 plate grip DOL=1.60
3) * This truss has been designed for a live load of 20.0psf on the bottom chord in all areas with a clearance greater than 6-0-0 between the bottom chord and any other members.
4) Refer to girder(s) for truss to truss connections.
5) Provide mechanical connection (by others) of truss to bearing plate capable of withstanding 100 lb uplift at joint(s) 4, 8, 5.

October 22,2018

ENGINEERING BY TRENCO A MiTek Affiliate
818 Soundside Road
Edenton, NC 27932

Job	Truss	Truss Type	Qty	Ply	Jason Price / Campbell Pointe Bldg. 25
J0918-4429	M01	COMMON	3	1	E12341636 Job Reference (optional)

Comtech, Inc., Fayetteville, NC 28309 — 8.130 s Mar 11 2018 MiTek Industries, Inc. Mon Oct 22 15:13:37 2018 Page 1

ID:ZzXTyMvxB55ZLn?FA7qN0rzLZck-sOzTxkr_cgTcUGKBv1kbpldpY8sWDWBrn8yJWqyQq4C

1-5-4 | 4-3-8 | 5-10-8
1-5-4 | 2-10-4 | 1-7-0

Scale = 1:23.0

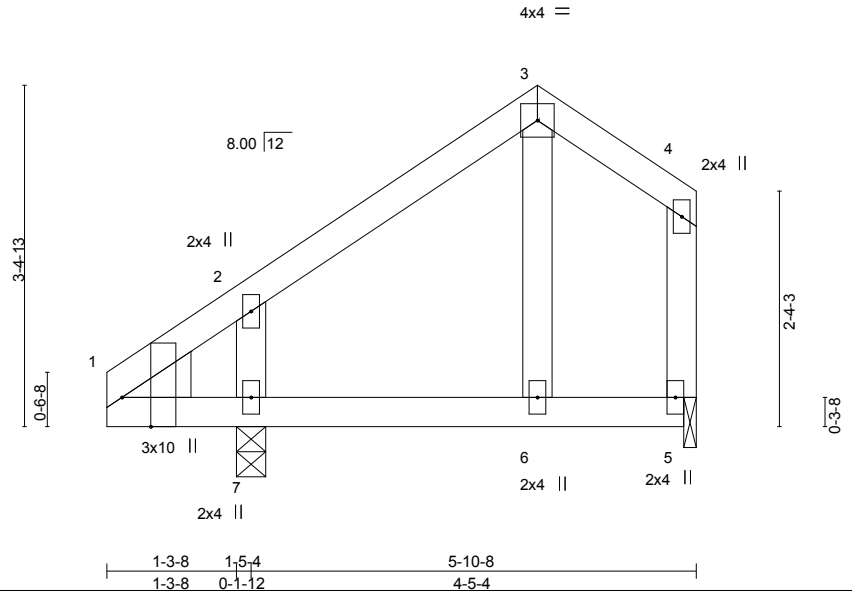

Plate Offsets (X,Y)-- [1:0-0-10,0-0-14], [1:0-1-3,0-5-5], [1:0-3-8,Edge]

LOADING (psf)		SPACING- 2-0-0		CSI.		DEFL. in (loc) l/defl L/d					PLATES	GRIP
TCLL	20.0	Plate Grip DOL	1.15	TC	0.15	Vert(LL)	-0.01	6	>999	360	MT20	244/190
TCDL	10.0	Lumber DOL	1.15	BC	0.15	Vert(TL)	-0.03	6-7	>999	240		
BCLL	0.0 *	Rep Stress Incr	YES	WB	0.05	Horz(TL)	0.00	5	n/a	n/a		
BCDL	10.0	Code IRC2009/TPI2007		Matrix-S		Wind(LL)	0.01	6	>999	240	Weight: 30 lb	FT = 20%

LUMBER-
TOP CHORD 2x4 SP No.1
BOT CHORD 2x4 SP No.1
WEBS 2x4 SP No.3
WEDGE
Left: 2x6 SP No.1

BRACING-
TOP CHORD Structural wood sheathing directly applied or 5-10-8 oc purlins, except end verticals.
BOT CHORD Rigid ceiling directly applied or 10-0-0 oc bracing.

REACTIONS. (lb/size) 7=306/0-3-8, 5=152/0-1-8
Max Horz 7=83(LC 5)
Max Uplift 7=-54(LC 6), 5=-23(LC 6)

FORCES. (lb) - Max. Comp./Max. Ten. - All forces 250 (lb) or less except when shown.

NOTES-
1) Unbalanced roof live loads have been considered for this design.
2) Wind: ASCE 7-05; 100mph; TCDL=6.0psf; BCDL=5.0psf; h=15ft; Cat. II; Exp C; enclosed; MWFRS (low-rise) and C-C Exterior(2) zone; cantilever left exposed ;C-C for members and forces & MWFRS for reactions shown; Lumber DOL=1.60 plate grip DOL=1.60
3) This truss has been designed for a 10.0 psf bottom chord live load nonconcurrent with any other live loads.
4) * This truss has been designed for a live load of 20.0psf on the bottom chord in all areas with a clearance greater than 6-0-0 between the bottom chord and any other members.
5) Bearing at joint(s) 5 considers parallel to grain value using ANSI/TPI 1 angle to grain formula. Building designer should verify capacity of bearing surface.
6) Provide mechanical connection (by others) of truss to bearing plate at joint(s) 5.
7) Provide mechanical connection (by others) of truss to bearing plate capable of withstanding 100 lb uplift at joint(s) 7, 5.

October 22,2018

ENGINEERING BY TRENCO A MiTek Affiliate
818 Soundside Road
Edenton, NC 27932

Job	Truss	Truss Type	Qty	Ply	Jason Price / Campbell Pointe Bldg. 25
J0918-4429	M02	HALF HIP	1	1	E12341637 Job Reference (optional)

Comtech, Inc., Fayetteville, NC 28309 8.130 s Mar 11 2018 MiTek Industries, Inc. Mon Oct 22 15:13:38 2018 Page 1

ID:ZzXTyMvxB55ZLn?FA7qN0rzLZck-KbXr84rcN_bS6QvNSlFqMz9_0YCdyzK_0ohs2HyQq4B

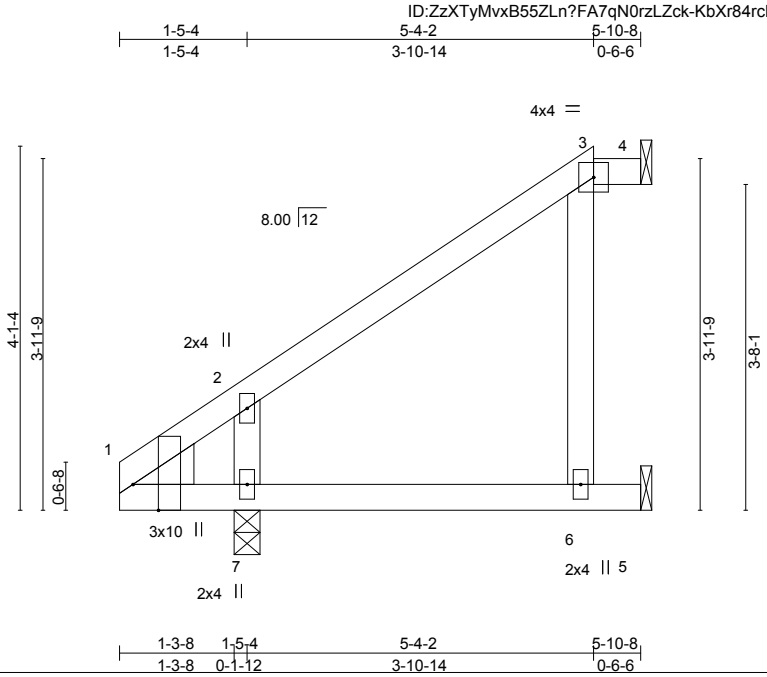

Plate Offsets (X,Y)-- [1:0-0-10,0-0-14], [1:0-1-3,0-5-5], [1:0-3-8,Edge]

LOADING (psf)		SPACING-	2-0-0	CSI.		DEFL.	in	(loc)	l/defl	L/d	PLATES	GRIP
TCLL	20.0	Plate Grip DOL	1.15	TC	0.17	Vert(LL)	-0.01	6-7	>999	360	MT20	244/190
TCDL	10.0	Lumber DOL	1.15	BC	0.16	Vert(TL)	-0.04	6-7	>999	240		
BCLL	0.0 *	Rep Stress Incr	YES	WB	0.06	Horz(TL)	-0.05	4	n/a	n/a		
BCDL	10.0	Code IRC2009/TPI2007		Matrix-P		Wind(LL)	0.03	6-7	>999	240	Weight: 28 lb	FT = 20%

LUMBER-
TOP CHORD 2x4 SP No.1
BOT CHORD 2x4 SP No.1
WEBS 2x4 SP No.3
WEDGE
Left: 2x6 SP No.1

BRACING-
TOP CHORD Structural wood sheathing directly applied or 5-10-8 oc purlins.
BOT CHORD Rigid ceiling directly applied or 6-0-0 oc bracing.

REACTIONS. (lb/size) 4=14/Mechanical, 5=142/Mechanical, 7=309/0-3-8
Max Horz 7=119(LC 6)
Max Uplift 4=-6(LC 4), 5=-57(LC 6), 7=-31(LC 6)

FORCES. (lb) - Max. Comp./Max. Ten. - All forces 250 (lb) or less except when shown.

NOTES-
1) Unbalanced roof live loads have been considered for this design.
2) Wind: ASCE 7-05; 100mph; TCDL=6.0psf; BCDL=5.0psf; h=15ft; Cat. II; Exp C; enclosed; MWFRS (low-rise) and C-C Exterior(2) zone; cantilever left exposed ;C-C for members and forces & MWFRS for reactions shown; Lumber DOL=1.60 plate grip DOL=1.60
3) Provide adequate drainage to prevent water ponding.
4) This truss has been designed for a 10.0 psf bottom chord live load nonconcurrent with any other live loads.
5) * This truss has been designed for a live load of 20.0psf on the bottom chord in all areas with a clearance greater than 6-0-0 between the bottom chord and any other members.
6) Refer to girder(s) for truss to truss connections.
7) Provide mechanical connection (by others) of truss to bearing plate capable of withstanding 100 lb uplift at joint(s) 4, 5, 7.

NORTH CAROLINA PROFESSIONAL SEAL 28677 ENGINEER JOHN L. GALINSKI

October 22,2018

ENGINEERING BY TRENCO A MiTek Affiliate
818 Soundside Road
Edenton, NC 27932

Job	Truss	Truss Type	Qty	Ply	Jason Price / Campbell Pointe Bldg. 25
J0918-4429	M03	GABLE	1	1	E12341638 Job Reference (optional)

Comtech, Inc., Fayetteville, NC 28309

8.130 s Mar 11 2018 MiTek Industries, Inc. Mon Oct 22 15:13:38 2018 Page 1
ID:ZzXTyMvxB55ZLn?FA7qN0rzLZck-KbXr84rcN_bS6QvNSlFqMz9tLYClyyV_0ohs2HyQq4B

Scale = 1:23.7

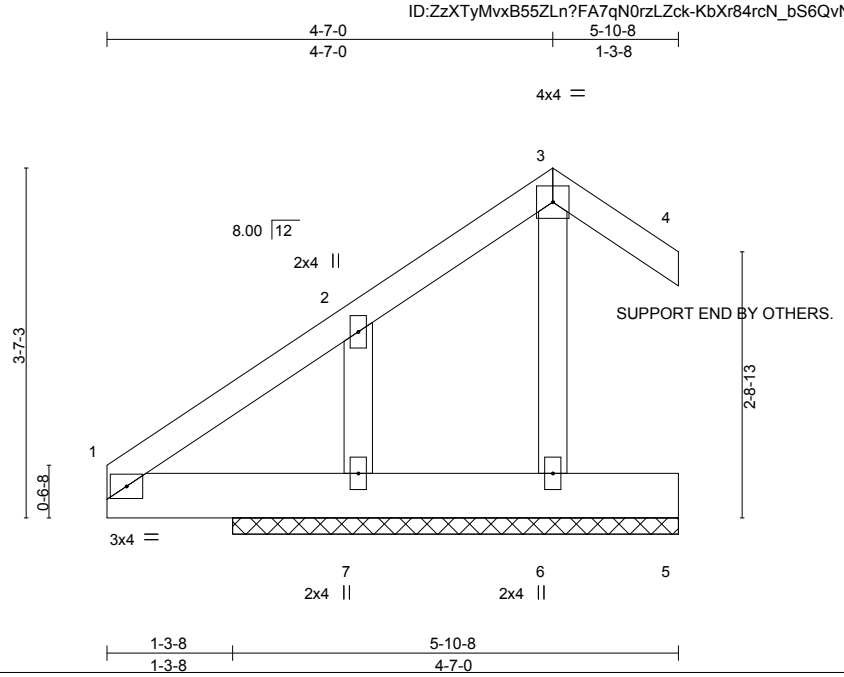

LOADING (psf)		SPACING-	2-0-0	CSI.		DEFL.	in	(loc)	l/defl	L/d	PLATES	GRIP
TCLL	20.0	Plate Grip DOL	1.15	TC	0.59	Vert(LL)	-0.11	3-4	n/r	120	MT20	244/190
TCDL	10.0	Lumber DOL	1.15	BC	0.15	Vert(TL)	-0.20	3-4	n/r	120		
BCLL	0.0 *	Rep Stress Incr	YES	WB	0.11	Horz(TL)	0.00		n/a	n/a		
BCDL	10.0	Code IRC2009/TPI2007		Matrix-S							Weight: 31 lb	FT = 20%

LUMBER-
TOP CHORD 2x4 SP No.1
BOT CHORD 2x6 SP No.1
OTHERS 2x4 SP No.3

BRACING-
TOP CHORD Structural wood sheathing directly applied or 5-10-8 oc purlins.
BOT CHORD Rigid ceiling directly applied or 10-0-0 oc bracing.

REACTIONS. (lb/size) 6=83/4-7-0, 7=387/4-7-0
Max Horz 7=69(LC 6)
Max Uplift 6=-58(LC 6), 7=-10(LC 6)
Max Grav 6=110(LC 11), 7=387(LC 1)

FORCES. (lb) - Max. Comp./Max. Ten. - All forces 250 (lb) or less except when shown.
WEBS 2-7=-423/369

NOTES-
1) Unbalanced roof live loads have been considered for this design.
2) Wind: ASCE 7-05; 100mph; TCDL=6.0psf; BCDL=5.0psf; h=15ft; Cat. II; Exp C; enclosed; MWFRS (low-rise) and C-C Exterior(2) zone; cantilever left exposed ;C-C for members and forces & MWFRS for reactions shown; Lumber DOL=1.60 plate grip DOL=1.60
3) Truss designed for wind loads in the plane of the truss only. For studs exposed to wind (normal to the face), see Standard Industry Gable End Details as applicable, or consult qualified building designer as per ANSI/TPI 1.
4) Gable studs spaced at 2-0-0 oc.
5) This truss has been designed for a 10.0 psf bottom chord live load nonconcurrent with any other live loads.
6) * This truss has been designed for a live load of 20.0psf on the bottom chord in all areas with a clearance greater than 6-0-0 between the bottom chord and any other members.
7) Provide mechanical connection (by others) of truss to bearing plate capable of withstanding 100 lb uplift at joint(s) 6, 7.
8) Non Standard bearing condition. Review required.

October 22,2018

ENGINEERING BY TRENCO A MiTek Affiliate
818 Soundside Road
Edenton, NC 27932

Job	Truss	Truss Type	Qty	Ply	Jason Price / Campbell Pointe Bldg. 25
J0918-4429	P01	COMMON STRUCTURAL GA	1	1	E12341639 Job Reference (optional)

Comtech, Inc., Fayetteville, NC 28309 8.130 s Mar 11 2018 MiTek Industries, Inc. Mon Oct 22 15:13:39 2018 Page 1
ID:ZzXTyMvxB55ZLn?FA7qN0rzLZck-on5DMQsE8IjJkaUZ0Sm3vAiAnyaPhPc8FSRQajyQq4A

Scale = 1:25.0

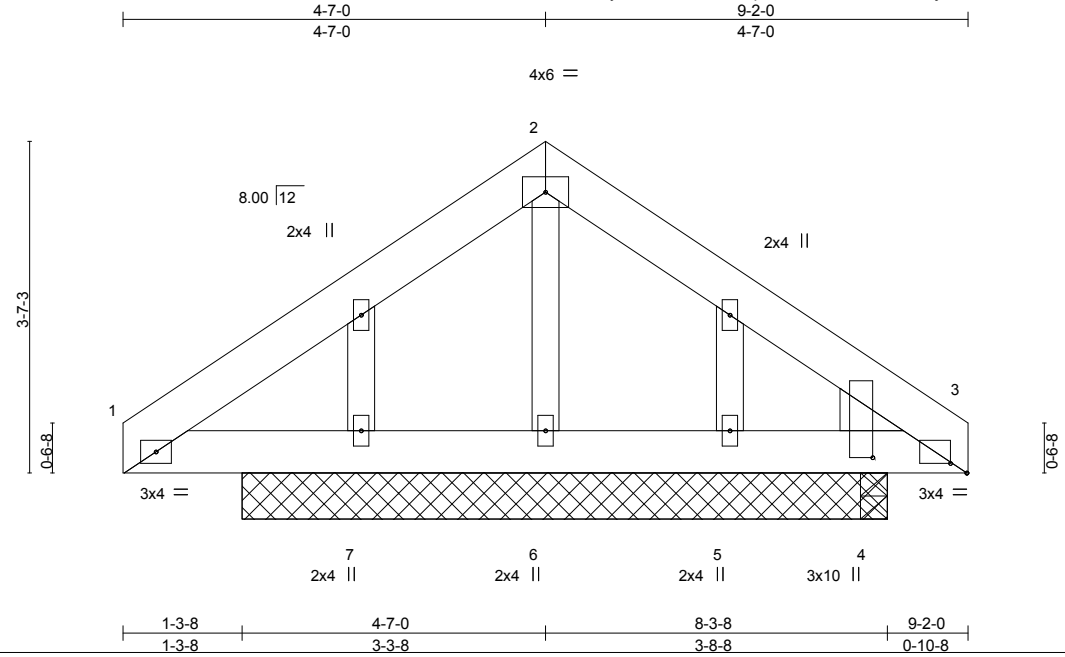

Plate Offsets (X,Y)-- [3:0-2-2,0-1-4], [3:0-2-0,1-0-4]

LOADING (psf)		SPACING- 2-0-0		CSI.		DEFL. in (loc) l/defl L/d		PLATES GRIP
TCLL	20.0	Plate Grip DOL	1.15	TC	0.10	Vert(LL) 0.00 7 >999 360		MT20 244/190
TCDL	10.0	Lumber DOL	1.15	BC	0.06	Vert(TL) 0.00 7 >999 240		
BCLL	0.0 *	Rep Stress Incr	YES	WB	0.12	Horz(TL) -0.00 3 n/a n/a		
BCDL	10.0	Code IRC2009/TPI2007		Matrix-S		Wind(LL) -0.00 7 >999 240		Weight: 58 lb FT = 20%

LUMBER-
TOP CHORD 2x6 SP No.1
BOT CHORD 2x6 SP No.1
WEBS 2x4 SP No.3
OTHERS 2x4 SP No.3
WEDGE
Right: 2x6 SP No.1

BRACING-
TOP CHORD Structural wood sheathing directly applied or 9-2-0 oc purlins.
BOT CHORD Rigid ceiling directly applied or 6-0-0 oc bracing.

REACTIONS. All bearings 7-0-0 except (jt=length) 4=0-3-8.
(lb) - Max Horz 7=-108(LC 4)
Max Uplift All uplift 100 lb or less at joint(s) 3, 7, 4 except 6=-134(LC 6)
Max Grav All reactions 250 lb or less at joint(s) 3, 7, 5, 4 except 6=465(LC 1)

FORCES. (lb) - Max. Comp./Max. Ten. - All forces 250 (lb) or less except when shown.
TOP CHORD 1-2=-73/268, 2-3=-71/262
WEBS 2-6=-486/230

NOTES-
1) Unbalanced roof live loads have been considered for this design.
2) Wind: ASCE 7-05; 100mph; TCDL=6.0psf; BCDL=5.0psf; h=15ft; Cat. II; Exp C; enclosed; MWFRS (low-rise) gable end zone and C-C Exterior(2) zone; cantilever left and right exposed ;C-C for members and forces & MWFRS for reactions shown; Lumber DOL=1.60 plate grip DOL=1.60
3) Truss designed for wind loads in the plane of the truss only. For studs exposed to wind (normal to the face), see Standard Industry Gable End Details as applicable, or consult qualified building designer as per ANSI/TPI 1.
4) Gable studs spaced at 2-0-0 oc.
5) This truss has been designed for a 10.0 psf bottom chord live load nonconcurrent with any other live loads.
6) * This truss has been designed for a live load of 20.0psf on the bottom chord in all areas with a clearance greater than 6-0-0 between the bottom chord and any other members.
7) Provide mechanical connection (by others) of truss to bearing plate capable of withstanding 100 lb uplift at joint(s) 3, 7, 4 except (jt=lb) 6=134.

October 22,2018

ENGINEERING BY TRENCO A MiTek Affiliate
818 Soundside Road
Edenton, NC 27932

Job	Truss	Truss Type	Qty	Ply	Jason Price / Campbell Pointe Bldg. 25
J0918-4429	P02	COMMON	2	1	E12341640 Job Reference (optional)

Comtech, Inc., Fayetteville, NC 28309

8.130 s Mar 11 2018 MiTek Industries, Inc. Mon Oct 22 15:13:40 2018 Page 1
ID:ZzXTyMvxB55ZLn?FA7qN0rzLZck-HzfcZmtsvbrALk3maAHIROFLkMupQsRHU6Az69yQq49

Scale = 1:22.8

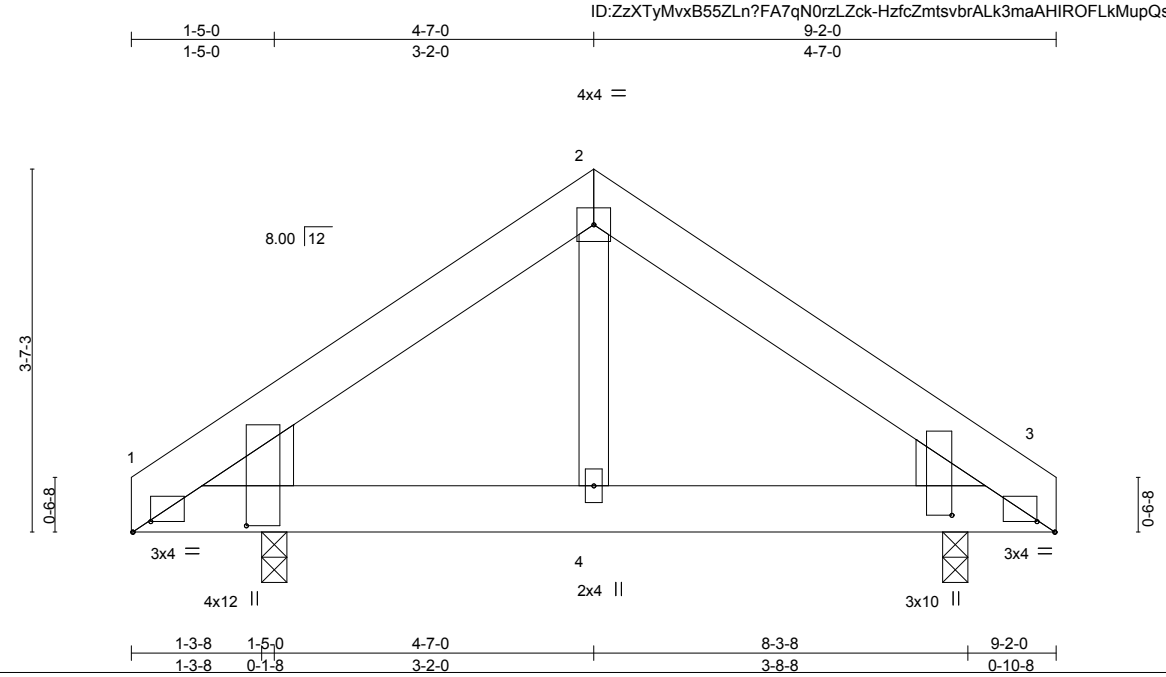

Plate Offsets (X,Y)-- [1:0-2-2,0-1-4], [1:0-0-12,1-1-8], [3:0-2-2,0-1-4], [3:0-2-0,1-0-4]

LOADING (psf)		SPACING- 2-0-0		CSI.		DEFL. in (loc) l/defl L/d		PLATES	GRIP
TCLL	20.0	Plate Grip DOL	1.15	TC	0.09	Vert(LL) -0.00 3-4 >999 360		MT20	244/190
TCDL	10.0	Lumber DOL	1.15	BC	0.12	Vert(TL) -0.01 3-4 >999 240			
BCLL	0.0 *	Rep Stress Incr	YES	WB	0.08	Horz(TL) 0.00 3 n/a n/a			
BCDL	10.0	Code IRC2009/TPI2007		Matrix-S		Wind(LL) 0.00 4 >999 240		Weight: 57 lb	FT = 20%

LUMBER-
TOP CHORD 2x6 SP No.1
BOT CHORD 2x6 SP No.1
WEBS 2x4 SP No.3
WEDGE
Left: 2x8 SP No.1, Right: 2x6 SP No.1

BRACING-
TOP CHORD Structural wood sheathing directly applied or 6-0-0 oc purlins.
BOT CHORD Rigid ceiling directly applied or 10-0-0 oc bracing.

REACTIONS. (lb/size) 1=356/0-3-0, 3=356/0-3-0
Max Horz 1=86(LC 5)
Max Uplift 1=-26(LC 6), 3=-26(LC 7)

FORCES. (lb) - Max. Comp./Max. Ten. - All forces 250 (lb) or less except when shown.
TOP CHORD 1-2=-429/136, 2-3=-429/136
BOT CHORD 1-4=-29/294, 3-4=-29/294

NOTES-
1) Unbalanced roof live loads have been considered for this design.
2) Wind: ASCE 7-05; 100mph; TCDL=6.0psf; BCDL=5.0psf; h=15ft; Cat. II; Exp C; enclosed; MWFRS (low-rise) and C-C Exterior(2) zone; cantilever left and right exposed ;C-C for members and forces & MWFRS for reactions shown; Lumber DOL=1.60 plate grip DOL=1.60
3) This truss has been designed for a 10.0 psf bottom chord live load nonconcurrent with any other live loads.
4) * This truss has been designed for a live load of 20.0psf on the bottom chord in all areas with a clearance greater than 6-0-0 between the bottom chord and any other members.
5) Provide mechanical connection (by others) of truss to bearing plate capable of withstanding 100 lb uplift at joint(s) 1, 3.

October 22,2018

ENGINEERING BY TRENCO A MiTek Affiliate
818 Soundside Road
Edenton, NC 27932

Job	Truss	Truss Type	Qty	Ply	Jason Price / Campbell Pointe Bldg. 25
J0918-4429	P03	COMMON SUPPORTED GAB	5	1	E12341641 Job Reference (optional)

Comtech, Inc., Fayetteville, NC 28309

8.130 s Mar 11 2018 MiTek Industries, Inc. Mon Oct 22 15:13:40 2018 Page 1
ID:ZzXTyMvxB55ZLn?FA7qN0rzLZck-HzfcZmtsvbrALk3maAHIROFLnMvtQtuHU6Az69yQq49

Scale = 1:22.8

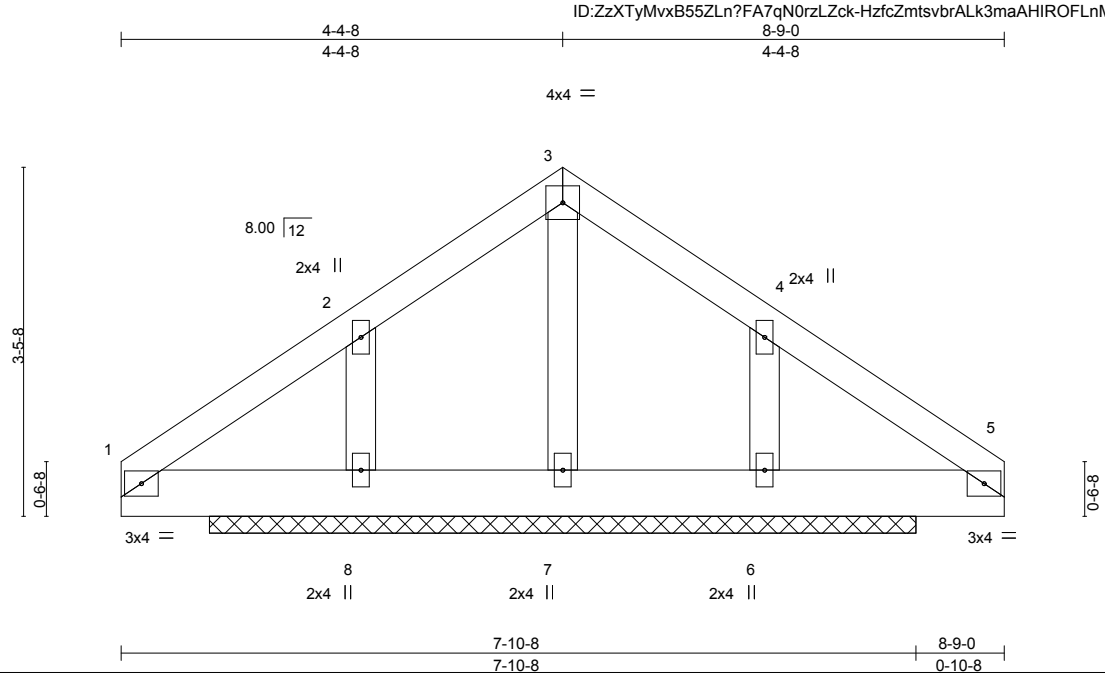

LOADING (psf)		SPACING-	2-0-0	CSI.		DEFL.	in	(loc)	l/defl	L/d	PLATES	GRIP
TCLL	20.0	Plate Grip DOL	1.15	TC	0.08	Vert(LL)	n/a	-	n/a	999	MT20	244/190
TCDL	10.0	Lumber DOL	1.15	BC	0.05	Vert(TL)	n/a	-	n/a	999		
BCLL	0.0 *	Rep Stress Incr	YES	WB	0.05	Horz(TL)	-0.00	6	n/a	n/a		
BCDL	10.0	Code IRC2009/TPI2007		Matrix-S							Weight: 45 lb	FT = 20%

LUMBER-
TOP CHORD 2x4 SP No.1
BOT CHORD 2x6 SP No.1
OTHERS 2x4 SP No.3

BRACING-
TOP CHORD Structural wood sheathing directly applied or 8-9-0 oc purlins.
BOT CHORD Rigid ceiling directly applied or 6-0-0 oc bracing.

REACTIONS. (lb/size) 7=210/7-0-0, 8=245/7-0-0, 6=245/7-0-0
Max Horz 8=-106(LC 4)
Max Uplift 8=-113(LC 6), 6=-113(LC 7)
Max Grav 7=210(LC 1), 8=279(LC 10), 6=279(LC 11)

FORCES. (lb) - Max. Comp./Max. Ten. - All forces 250 (lb) or less except when shown.

NOTES-
1) Unbalanced roof live loads have been considered for this design.
2) Wind: ASCE 7-05; 100mph; TCDL=6.0psf; BCDL=5.0psf; h=15ft; Cat. II; Exp C; enclosed; MWFRS (low-rise) gable end zone and C-C Corner(3) zone; cantilever left and right exposed ;C-C for members and forces & MWFRS for reactions shown; Lumber DOL=1.60 plate grip DOL=1.60
3) Truss designed for wind loads in the plane of the truss only. For studs exposed to wind (normal to the face), see Standard Industry Gable End Details as applicable, or consult qualified building designer as per ANSI/TPI 1.
4) Gable studs spaced at 2-0-0 oc.
5) This truss has been designed for a 10.0 psf bottom chord live load nonconcurrent with any other live loads.
6) * This truss has been designed for a live load of 20.0psf on the bottom chord in all areas with a clearance greater than 6-0-0 between the bottom chord and any other members.
7) Provide mechanical connection (by others) of truss to bearing plate capable of withstanding 100 lb uplift at joint(s) except (jt=lb) 8=113, 6=113.
8) Non Standard bearing condition. Review required.

October 22,2018

ENGINEERING BY
TRENCO
A MiTek Affiliate
818 Soundside Road
Edenton, NC 27932

Job	Truss	Truss Type	Qty	Ply	Jason Price / Campbell Pointe Bldg. 25
J0918-4429	P04	COMMON	10	1	E12341642 Job Reference (optional)

Comtech, Inc., Fayetteville, NC 28309 8.130 s Mar 11 2018 MiTek Industries, Inc. Mon Oct 22 15:13:41 2018 Page 1
ID:ZzXTyMvxB55ZLn?FA7qN0rzLZck-lAD_n6uVgvz1ztey8toX_bnWpmDs9KURimwWfbyQq48

Scale = 1:22.1

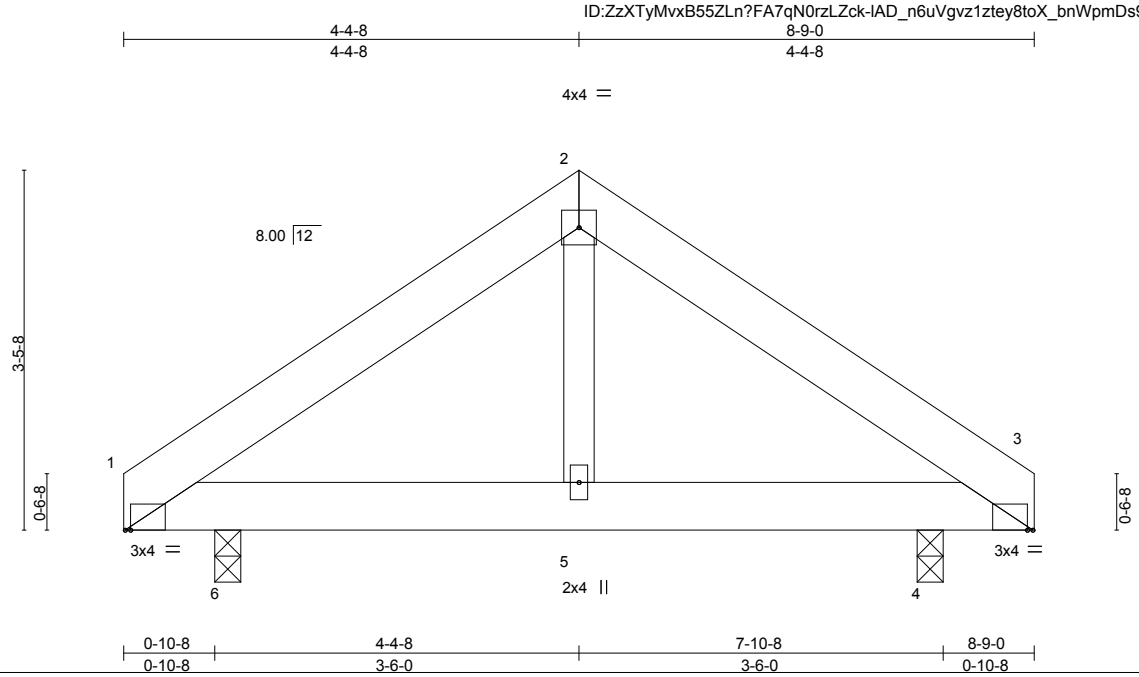

Plate Offsets (X,Y)-- [1:0-0-10,0-0-0], [3:0-0-10,0-0-0]

LOADING (psf)		SPACING- 2-0-0		CSI.		DEFL. in (loc) l/defl L/d		PLATES GRIP
TCLL 20.0		Plate Grip DOL 1.15		TC 0.07		Vert(LL) -0.00 5 >999 360		MT20 244/190
TCDL 10.0		Lumber DOL 1.15		BC 0.13		Vert(TL) -0.01 5 >999 240		
BCLL 0.0	*	Rep Stress Incr YES		WB 0.03		Horz(TL) 0.00 4 n/a n/a		
BCDL 10.0		Code IRC2009/TPI2007		Matrix-S		Wind(LL) 0.00 5 >999 240		Weight: 50 lb FT = 20%

LUMBER-
TOP CHORD 2x6 SP No.1
BOT CHORD 2x6 SP No.1
WEBS 2x4 SP No.3

BRACING-
TOP CHORD Structural wood sheathing directly applied or 6-0-0 oc purlins.
BOT CHORD Rigid ceiling directly applied or 10-0-0 oc bracing.

REACTIONS. (lb/size) 6=349/0-3-0, 4=349/0-3-0
Max Horz 6=-82(LC 4)
Max Uplift 6=-54(LC 6), 4=-54(LC 7)

FORCES. (lb) - Max. Comp./Max. Ten. - All forces 250 (lb) or less except when shown.

NOTES-
1) Unbalanced roof live loads have been considered for this design.
2) Wind: ASCE 7-05; 100mph; TCDL=6.0psf; BCDL=5.0psf; h=15ft; Cat. II; Exp C; enclosed; MWFRS (low-rise) and C-C Exterior(2) zone; cantilever left and right exposed ;C-C for members and forces & MWFRS for reactions shown; Lumber DOL=1.60 plate grip DOL=1.60
3) This truss has been designed for a 10.0 psf bottom chord live load nonconcurrent with any other live loads.
4) * This truss has been designed for a live load of 20.0psf on the bottom chord in all areas with a clearance greater than 6-0-0 between the bottom chord and any other members.
5) Provide mechanical connection (by others) of truss to bearing plate capable of withstanding 100 lb uplift at joint(s) 6, 4.

October 22,2018

ENGINEERING BY TRENCO A MiTek Affiliate
818 Soundside Road
Edenton, NC 27932

Job	Truss	Truss Type	Qty	Ply	Jason Price / Campbell Pointe Bldg. 25
J0918-4429	V01	GABLE	2	1	E12341643 Job Reference (optional)

Comtech, Inc., Fayetteville, NC 28309

8.130 s Mar 11 2018 MiTek Industries, Inc. Mon Oct 22 15:13:41 2018 Page 1
ID:ZzXTyMvxB55ZLn?FA7qN0rzLZck-lAD_n6uVgvz1ztey8toX_bnXJmFX9KJRimwWfbyQq48

7-9-8 | 15-7-1
7-9-8 | 7-9-9

Scale = 1:31.0

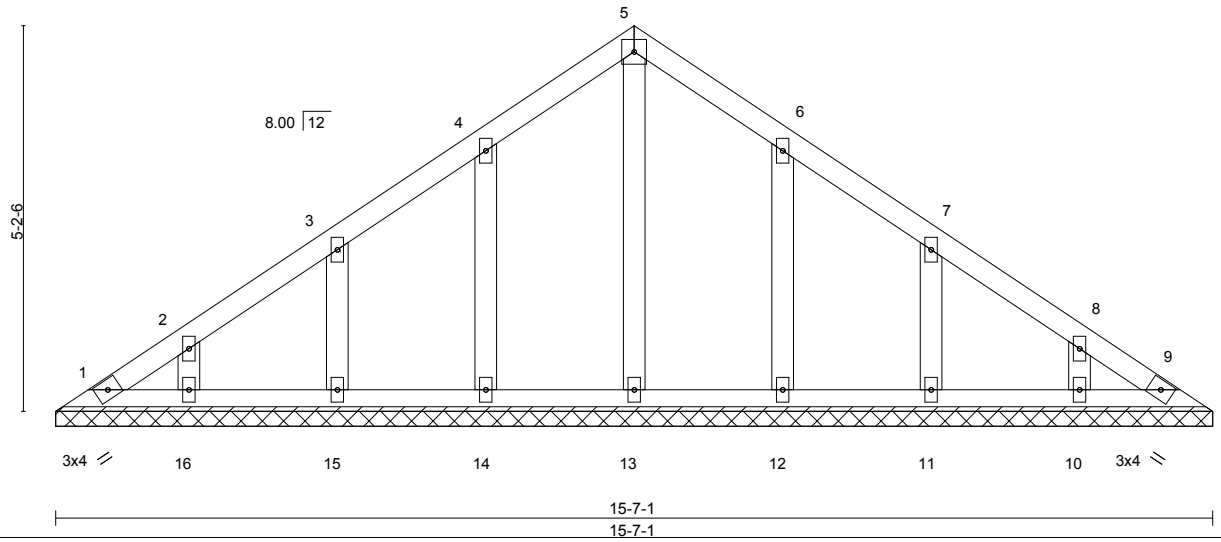

LOADING (psf)		SPACING-	2-0-0	CSI.		DEFL.	in	(loc)	l/defl	L/d	PLATES	GRIP
TCLL	20.0	Plate Grip DOL	1.15	TC	0.03	Vert(LL)	n/a	-	n/a	999	MT20	244/190
TCDL	10.0	Lumber DOL	1.15	BC	0.02	Vert(TL)	n/a	-	n/a	999		
BCLL	0.0 *	Rep Stress Incr	YES	WB	0.04	Horz(TL)	0.00	9	n/a	n/a		
BCDL	10.0	Code IRC2009/TPI2007		Matrix-S							Weight: 74 lb	FT = 20%

LUMBER-
TOP CHORD 2x4 SP No.1
BOT CHORD 2x4 SP No.1
OTHERS 2x4 SP No.3

BRACING-
TOP CHORD Structural wood sheathing directly applied or 6-0-0 oc purlins.
BOT CHORD Rigid ceiling directly applied or 10-0-0 oc bracing.

REACTIONS. All bearings 15-7-1.
(lb) - Max Horz 1=-170(LC 4)
Max Uplift All uplift 100 lb or less at joint(s) 1, 9, 14, 15, 16, 12, 11, 10
Max Grav All reactions 250 lb or less at joint(s) 1, 9, 13, 14, 15, 16, 12, 11, 10

FORCES. (lb) - Max. Comp./Max. Ten. - All forces 250 (lb) or less except when shown.

NOTES-
1) Unbalanced roof live loads have been considered for this design.
2) Wind: ASCE 7-05; 100mph; TCDL=6.0psf; BCDL=5.0psf; h=15ft; Cat. II; Exp C; enclosed; MWFRS (low-rise) gable end zone and C-C Exterior(2) zone;C-C for members and forces & MWFRS for reactions shown; Lumber DOL=1.60 plate grip DOL=1.60
3) All plates are 2x4 MT20 unless otherwise indicated.
4) Gable requires continuous bottom chord bearing.
5) This truss has been designed for a 10.0 psf bottom chord live load nonconcurrent with any other live loads.
6) * This truss has been designed for a live load of 20.0psf on the bottom chord in all areas with a clearance greater than 6-0-0 between the bottom chord and any other members.
7) Provide mechanical connection (by others) of truss to bearing plate capable of withstanding 100 lb uplift at joint(s) 1, 9, 14, 15, 16, 12, 11, 10.

October 22,2018

ENGINEERING BY TRENCO A MiTek Affiliate
818 Soundside Road
Edenton, NC 27932

Job	Truss	Truss Type	Qty	Ply	Jason Price / Campbell Pointe Bldg. 25
J0918-4429	V02	VALLEY	2	1	E12341644 Job Reference (optional)

Comtech, Inc., Fayetteville, NC 28309 8.130 s Mar 11 2018 MiTek Industries, Inc. Mon Oct 22 15:13:42 2018 Page 1

ID:ZzXTyMvxB55ZLn?FA7qN0rzLZck-DMmM_Ru7RD5ub1C8hbJmWpKhb9aiunHaxQf4B2yQq47

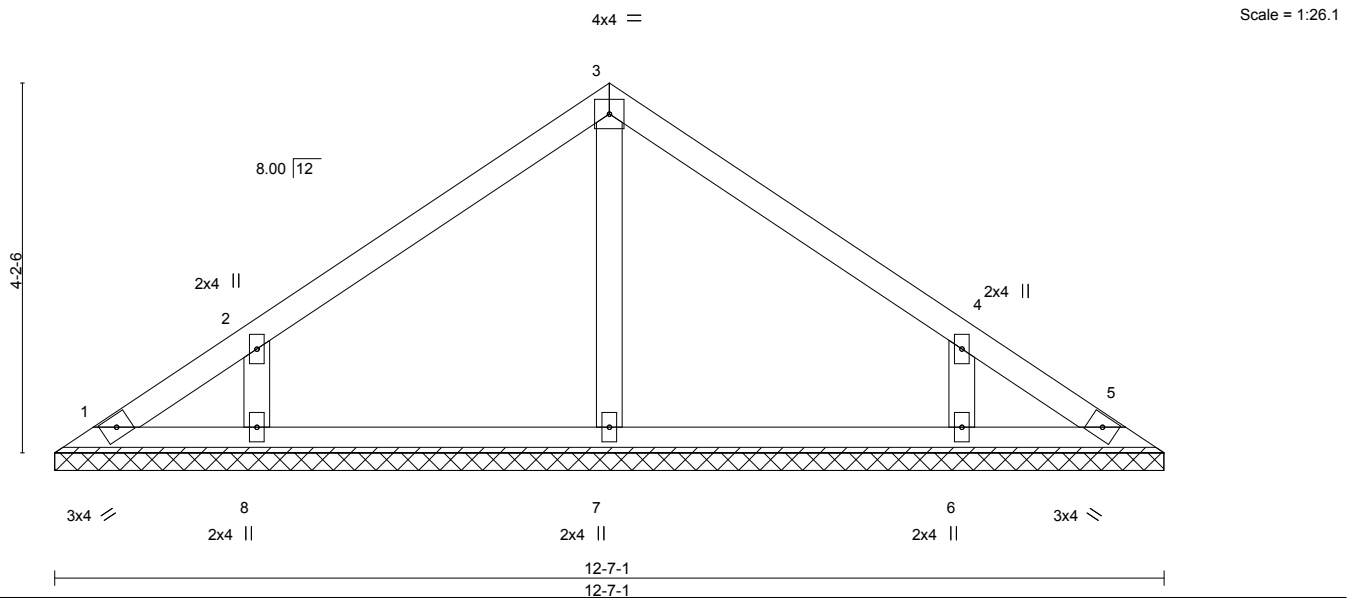

Plate Offsets (X,Y)-- [4:0-0-0,0-0-0]

LOADING (psf)		SPACING- 2-0-0		CSI.		DEFL. in (loc) l/defl L/d		PLATES	GRIP
TCLL	20.0	Plate Grip DOL	1.15	TC	0.13	Vert(LL) n/a - n/a 999		MT20	244/190
TCDL	10.0	Lumber DOL	1.15	BC	0.09	Vert(TL) n/a - n/a 999			
BCLL	0.0 *	Rep Stress Incr	YES	WB	0.06	Horz(TL) 0.00 5 n/a n/a			
BCDL	10.0	Code IRC2009/TPI2007		Matrix-S				Weight: 48 lb	FT = 20%

LUMBER-
TOP CHORD 2x4 SP No.1
BOT CHORD 2x4 SP No.1
OTHERS 2x4 SP No.3

BRACING-
TOP CHORD Structural wood sheathing directly applied or 6-0-0 oc purlins.
BOT CHORD Rigid ceiling directly applied or 10-0-0 oc bracing.

REACTIONS. All bearings 12-7-1.
(lb) - Max Horz 1=-108(LC 4)
Max Uplift All uplift 100 lb or less at joint(s) 1, 5, 8, 6
Max Grav All reactions 250 lb or less at joint(s) 1, 5 except 7=262(LC 1), 8=296(LC 10), 6=296(LC 11)

FORCES. (lb) - Max. Comp./Max. Ten. - All forces 250 (lb) or less except when shown.

NOTES-
1) Unbalanced roof live loads have been considered for this design.
2) Wind: ASCE 7-05; 100mph; TCDL=6.0psf; BCDL=5.0psf; h=15ft; Cat. II; Exp C; enclosed; MWFRS (low-rise) and C-C Exterior(2) zone;C-C for members and forces & MWFRS for reactions shown; Lumber DOL=1.60 plate grip DOL=1.60
3) This truss has been designed for a 10.0 psf bottom chord live load nonconcurrent with any other live loads.
4) * This truss has been designed for a live load of 20.0psf on the bottom chord in all areas with a clearance greater than 6-0-0 between the bottom chord and any other members.
5) Provide mechanical connection (by others) of truss to bearing plate capable of withstanding 100 lb uplift at joint(s) 1, 5, 8, 6.
6) Non Standard bearing condition. Review required.

October 22,2018

ENGINEERING BY TRENCO A MiTek Affiliate
818 Soundside Road
Edenton, NC 27932

Job	Truss	Truss Type	Qty	Ply	Jason Price / Campbell Pointe Bldg. 25
J0918-4429	V03	VALLEY	2	1	E12341645 Job Reference (optional)

Comtech, Inc., Fayetteville, NC 28309 8.130 s Mar 11 2018 MiTek Industries, Inc. Mon Oct 22 15:13:42 2018 Page 1
ID:ZzXTyMvxB55ZLn?FA7qN0rzLZck-DMmM_Ru7RD5ub1C8hbJmWpKgb9ZzunOaxQf4B2yQq47

4-9-8 | 9-7-1
4-9-8 | 4-9-9

Scale = 1:21.1

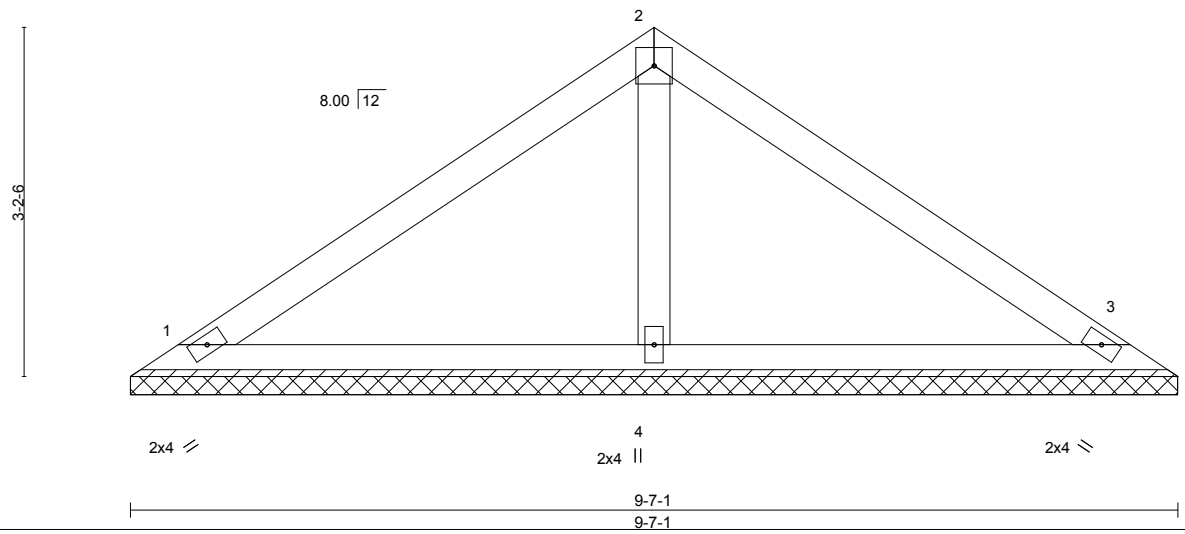

LOADING (psf)		SPACING-	2-0-0	CSI.		DEFL.	in	(loc)	l/defl	L/d	PLATES	GRIP
TCLL	20.0	Plate Grip DOL	1.15	TC	0.19	Vert(LL)	n/a	-	n/a	999	MT20	244/190
TCDL	10.0	Lumber DOL	1.15	BC	0.14	Vert(TL)	n/a	-	n/a	999		
BCLL	0.0 *	Rep Stress Incr	YES	WB	0.05	Horz(TL)	0.00	3	n/a	n/a		
BCDL	10.0	Code IRC2009/TPI2007		Matrix-S							Weight: 34 lb	FT = 20%

LUMBER-
TOP CHORD 2x4 SP No.1
BOT CHORD 2x4 SP No.1
OTHERS 2x4 SP No.3

BRACING-
TOP CHORD Structural wood sheathing directly applied or 6-0-0 oc purlins.
BOT CHORD Rigid ceiling directly applied or 10-0-0 oc bracing.

REACTIONS. (lb/size) 1=173/9-7-1, 3=173/9-7-1, 4=344/9-7-1
Max Horz 1=-80(LC 4)
Max Uplift 1=-24(LC 6), 3=-31(LC 7), 4=-3(LC 6)

FORCES. (lb) - Max. Comp./Max. Ten. - All forces 250 (lb) or less except when shown.

NOTES-
1) Unbalanced roof live loads have been considered for this design.
2) Wind: ASCE 7-05; 100mph; TCDL=6.0psf; BCDL=5.0psf; h=15ft; Cat. II; Exp C; enclosed; MWFRS (low-rise) and C-C Exterior(2) zone;C-C for members and forces & MWFRS for reactions shown; Lumber DOL=1.60 plate grip DOL=1.60
3) This truss has been designed for a 10.0 psf bottom chord live load nonconcurrent with any other live loads.
4) * This truss has been designed for a live load of 20.0psf on the bottom chord in all areas with a clearance greater than 6-0-0 between the bottom chord and any other members.
5) Provide mechanical connection (by others) of truss to bearing plate capable of withstanding 100 lb uplift at joint(s) 1, 3, 4.
6) Non Standard bearing condition. Review required.

October 22,2018

ENGINEERING BY TRENCO A MiTek Affiliate
818 Soundside Road
Edenton, NC 27932

Job	Truss	Truss Type	Qty	Ply	Jason Price / Campbell Pointe Bldg. 25
J0918-4429	V04	VALLEY	2	1	E12341646 Job Reference (optional)

Comtech, Inc., Fayetteville, NC 28309 8.130 s Mar 11 2018 MiTek Industries, Inc. Mon Oct 22 15:13:43 2018 Page 1
ID:ZzXTyMvxB55ZLn?FA7qN0rzLZck-hYKkCnvlCWDlCBnKFIr?30tshZxPdD1jA4PdjUyQq46

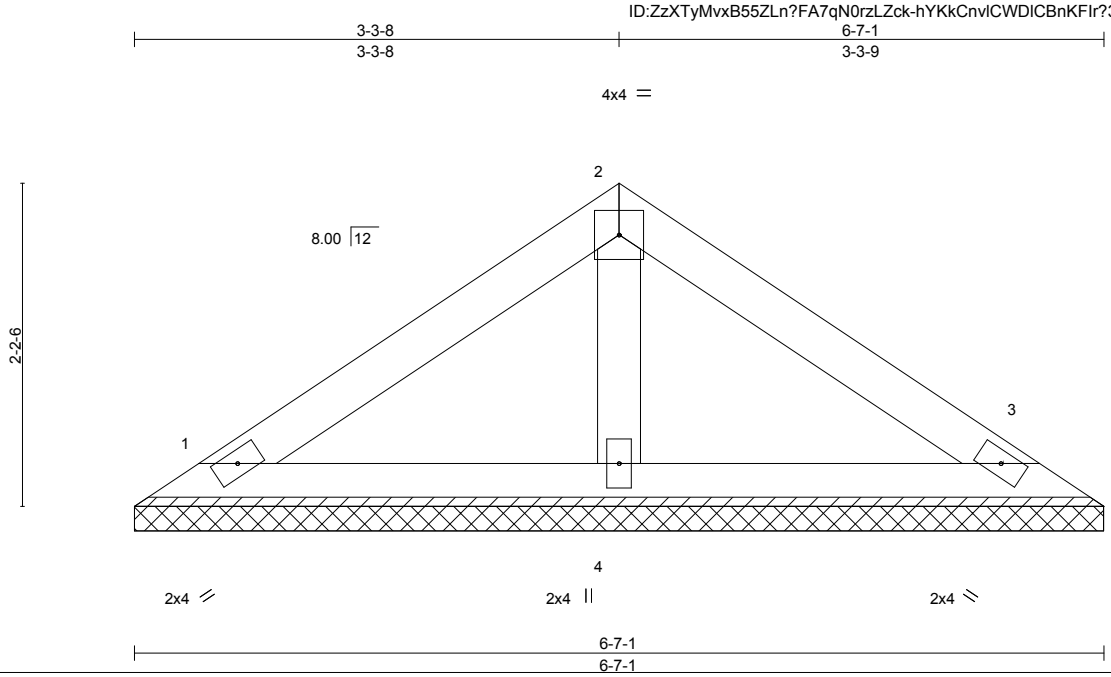

LOADING (psf)		SPACING- 2-0-0		CSI.		DEFL. in (loc) l/defl L/d		PLATES GRIP
TCLL	20.0	Plate Grip DOL	1.15	TC	0.11	Vert(LL) n/a - n/a 999		MT20 244/190
TCDL	10.0	Lumber DOL	1.15	BC	0.06	Vert(TL) n/a - n/a 999		
BCLL	0.0 *	Rep Stress Incr	YES	WB	0.03	Horz(TL) 0.00 3 n/a n/a		
BCDL	10.0	Code IRC2009/TPI2007		Matrix-P				Weight: 22 lb FT = 20%

LUMBER-
TOP CHORD 2x4 SP No.1
BOT CHORD 2x4 SP No.1
OTHERS 2x4 SP No.3

BRACING-
TOP CHORD Structural wood sheathing directly applied or 6-0-0 oc purlins.
BOT CHORD Rigid ceiling directly applied or 10-0-0 oc bracing.

REACTIONS. (lb/size) 1=123/6-7-1, 3=123/6-7-1, 4=204/6-7-1
Max Horz 1=52(LC 5)
Max Uplift 1=-21(LC 6), 3=-25(LC 7)

FORCES. (lb) - Max. Comp./Max. Ten. - All forces 250 (lb) or less except when shown.

NOTES-
1) Unbalanced roof live loads have been considered for this design.
2) Wind: ASCE 7-05; 100mph; TCDL=6.0psf; BCDL=5.0psf; h=15ft; Cat. II; Exp C; enclosed; MWFRS (low-rise) and C-C Exterior(2) zone;C-C for members and forces & MWFRS for reactions shown; Lumber DOL=1.60 plate grip DOL=1.60
3) This truss has been designed for a 10.0 psf bottom chord live load nonconcurrent with any other live loads.
4) * This truss has been designed for a live load of 20.0psf on the bottom chord in all areas with a clearance greater than 6-0-0 between the bottom chord and any other members.
5) Provide mechanical connection (by others) of truss to bearing plate capable of withstanding 100 lb uplift at joint(s) 1, 3.
6) Non Standard bearing condition. Review required.

October 22,2018

ENGINEERING BY TRENCO A MiTek Affiliate
818 Soundside Road
Edenton, NC 27932

Job	Truss	Truss Type	Qty	Ply	Jason Price / Campbell Pointe Bldg. 25
J0918-4429	V05	VALLEY	2	1	E12341647 Job Reference (optional)

Comtech, Inc., Fayetteville, NC 28309 8.130 s Mar 11 2018 MiTek Industries, Inc. Mon Oct 22 15:13:43 2018 Page 1
ID:ZzXTyMvxB55ZLn?FA7qN0rzLZck-hYKkCnvlCWDlCBnKFlr?30tt0ZxPdDSjA4PdjUyQq46

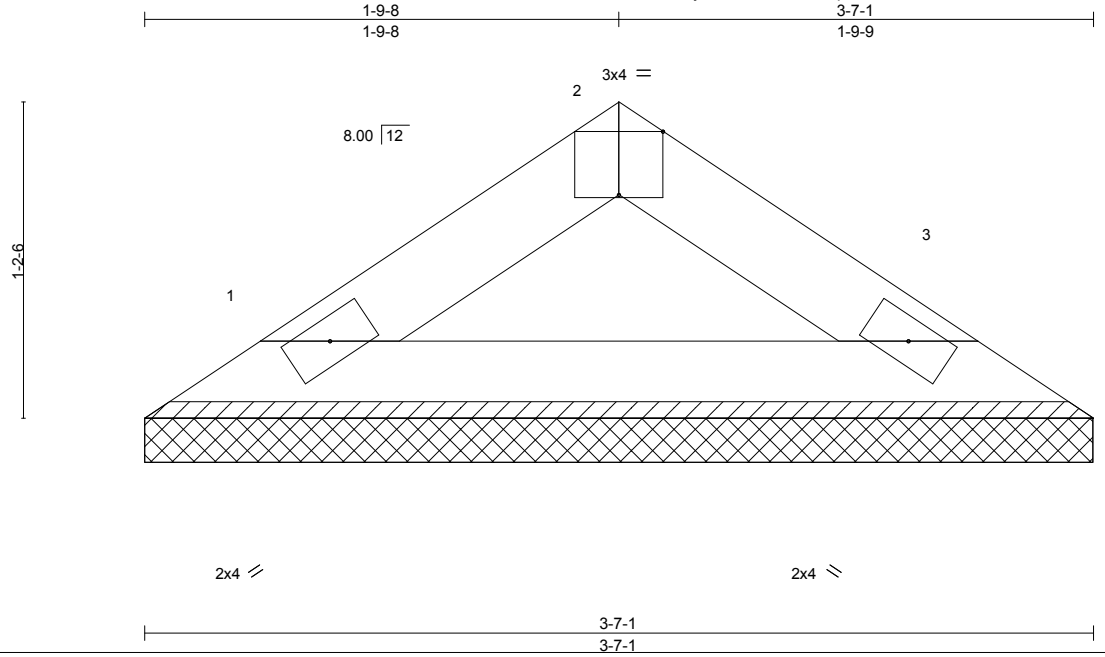

Plate Offsets (X,Y)-- [2:0-2-0,Edge]

LOADING (psf)			SPACING- 2-0-0		CSI.		DEFL.	in	(loc)	l/defl	L/d	PLATES	GRIP
TCLL	20.0		Plate Grip DOL	1.15	TC	0.02	Vert(LL)	n/a	-	n/a	999	MT20	244/190
TCDL	10.0		Lumber DOL	1.15	BC	0.06	Vert(TL)	n/a	-	n/a	999		
BCLL	0.0	*	Rep Stress Incr	YES	WB	0.00	Horz(TL)	0.00	3	n/a	n/a		
BCDL	10.0		Code IRC2009/TPI2007		Matrix-P							Weight: 10 lb	FT = 20%

LUMBER-
TOP CHORD 2x4 SP No.1
BOT CHORD 2x4 SP No.1

BRACING-
TOP CHORD Structural wood sheathing directly applied or 3-7-1 oc purlins.
BOT CHORD Rigid ceiling directly applied or 10-0-0 oc bracing.

REACTIONS. (lb/size) 1=105/3-7-1, 3=105/3-7-1
Max Horz 1=-24(LC 4)
Max Uplift 1=-8(LC 6), 3=-8(LC 7)

FORCES. (lb) - Max. Comp./Max. Ten. - All forces 250 (lb) or less except when shown.

NOTES-
1) Unbalanced roof live loads have been considered for this design.
2) Wind: ASCE 7-05; 100mph; TCDL=6.0psf; BCDL=5.0psf; h=15ft; Cat. II; Exp C; enclosed; MWFRS (low-rise) and C-C Exterior(2) zone;C-C for members and forces & MWFRS for reactions shown; Lumber DOL=1.60 plate grip DOL=1.60
3) This truss has been designed for a 10.0 psf bottom chord live load nonconcurrent with any other live loads.
4) * This truss has been designed for a live load of 20.0psf on the bottom chord in all areas with a clearance greater than 6-0-0 between the bottom chord and any other members.
5) Provide mechanical connection (by others) of truss to bearing plate capable of withstanding 100 lb uplift at joint(s) 1, 3.
6) Non Standard bearing condition. Review required.

October 22,2018

ENGINEERING BY TRENCO A MiTek Affiliate
818 Soundside Road
Edenton, NC 27932

Job	Truss	Truss Type	Qty	Ply	Jason Price / Campbell Pointe Bldg. 25
J0918-4429	VB01	VALLEY	5	1	E12341648 Job Reference (optional)

Comtech, Inc., Fayetteville, NC 28309 8.130 s Mar 11 2018 MiTek Industries, Inc. Mon Oct 22 15:13:44 2018 Page 1

ID:ZzXTyMvxB55ZLn?FA7qN0rzLZck-9ku6P7wNzqLcqLMXp0MEcEP1RzHeMgHtOk8BFwyQq45

3-3-8 6-7-1
3-3-8 3-3-9

Scale = 1:15.7

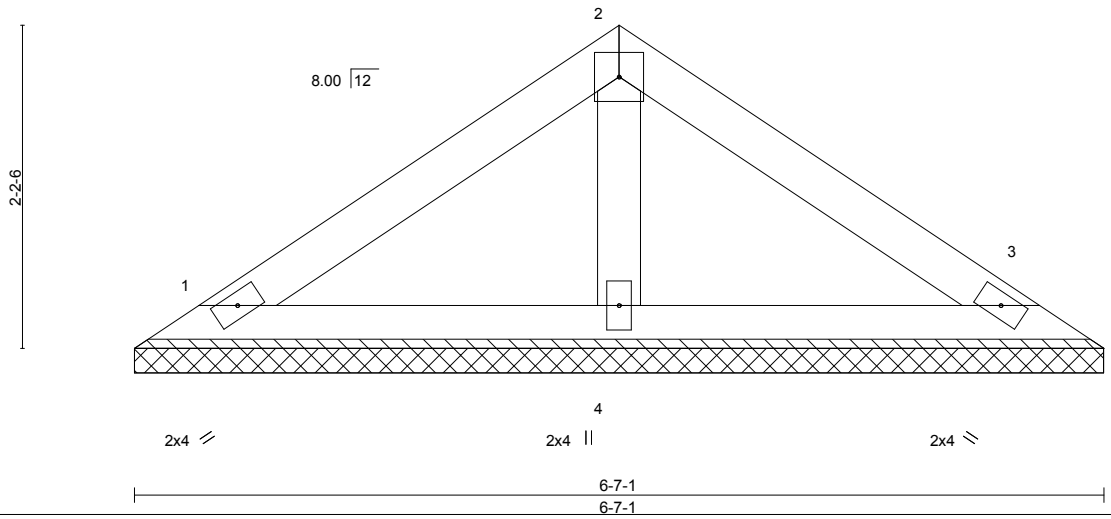

LOADING (psf)		SPACING-	2-0-0	CSI.		DEFL.	in	(loc)	l/defl	L/d	PLATES	GRIP
TCLL	20.0	Plate Grip DOL	1.15	TC	0.11	Vert(LL)	n/a	-	n/a	999	MT20	244/190
TCDL	10.0	Lumber DOL	1.15	BC	0.06	Vert(TL)	n/a	-	n/a	999		
BCLL	0.0 *	Rep Stress Incr	YES	WB	0.03	Horz(TL)	0.00	3	n/a	n/a		
BCDL	10.0	Code IRC2009/TPI2007		Matrix-P							Weight: 22 lb	FT = 20%

LUMBER-
TOP CHORD 2x4 SP No.1
BOT CHORD 2x4 SP No.1
OTHERS 2x4 SP No.3

BRACING-
TOP CHORD Structural wood sheathing directly applied or 6-0-0 oc purlins.
BOT CHORD Rigid ceiling directly applied or 10-0-0 oc bracing.

REACTIONS. (lb/size) 1=123/6-7-1, 3=123/6-7-1, 4=204/6-7-1
Max Horz 1=-52(LC 4)
Max Uplift 1=-21(LC 6), 3=-25(LC 7)

FORCES. (lb) - Max. Comp./Max. Ten. - All forces 250 (lb) or less except when shown.

NOTES-
1) Unbalanced roof live loads have been considered for this design.
2) Wind: ASCE 7-05; 100mph; TCDL=6.0psf; BCDL=5.0psf; h=15ft; Cat. II; Exp C; enclosed; MWFRS (low-rise) and C-C Exterior(2) zone;C-C for members and forces & MWFRS for reactions shown; Lumber DOL=1.60 plate grip DOL=1.60
3) This truss has been designed for a 10.0 psf bottom chord live load nonconcurrent with any other live loads.
4) * This truss has been designed for a live load of 20.0psf on the bottom chord in all areas with a clearance greater than 6-0-0 between the bottom chord and any other members.
5) Provide mechanical connection (by others) of truss to bearing plate capable of withstanding 100 lb uplift at joint(s) 1, 3.
6) Non Standard bearing condition. Review required.

October 22,2018

ENGINEERING BY TRENCO A MiTek Affiliate
818 Soundside Road
Edenton, NC 27932

Job	Truss	Truss Type	Qty	Ply	Jason Price / Campbell Pointe Bldg. 25
J0918-4429	VB02	VALLEY	5	1	E12341649 Job Reference (optional)

Comtech, Inc., Fayetteville, NC 28309 8.130 s Mar 11 2018 MiTek Industries, Inc. Mon Oct 22 15:13:45 2018 Page 1
ID:ZzXTyMvxB55ZLn?FA7qN0rzLZck-dxSVcTx?k8TTSVxjNjtT8RyDWNdt57x0dOukoNyQq44

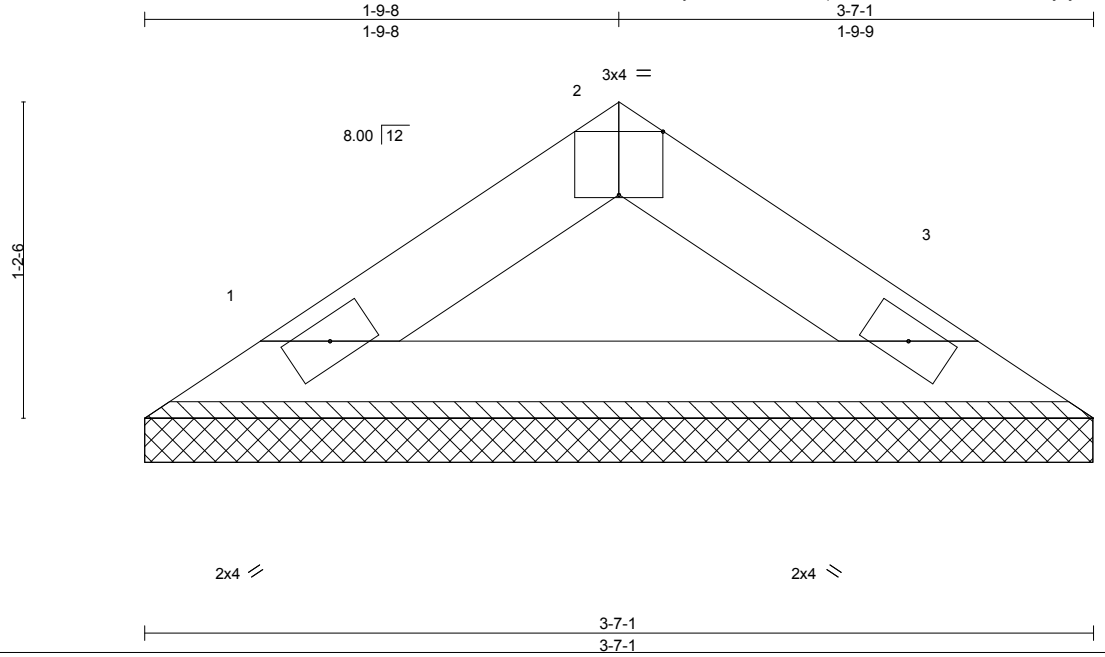

Plate Offsets (X,Y)-- [2:0-2-0,Edge]

LOADING (psf)		SPACING- 2-0-0		CSI.		DEFL. in (loc) l/defl L/d					PLATES	GRIP
TCLL	20.0	Plate Grip DOL	1.15	TC	0.02	Vert(LL)	n/a	-	n/a	999	MT20	244/190
TCDL	10.0	Lumber DOL	1.15	BC	0.06	Vert(TL)	n/a	-	n/a	999		
BCLL	0.0 *	Rep Stress Incr	YES	WB	0.00	Horz(TL)	0.00	3	n/a	n/a		
BCDL	10.0	Code IRC2009/TPI2007		Matrix-P							Weight: 10 lb	FT = 20%

LUMBER-
TOP CHORD 2x4 SP No.1
BOT CHORD 2x4 SP No.1

BRACING-
TOP CHORD Structural wood sheathing directly applied or 3-7-1 oc purlins.
BOT CHORD Rigid ceiling directly applied or 10-0-0 oc bracing.

REACTIONS. (lb/size) 1=105/3-7-1, 3=105/3-7-1
Max Horz 1=-24(LC 4)
Max Uplift 1=-8(LC 6), 3=-8(LC 7)

FORCES. (lb) - Max. Comp./Max. Ten. - All forces 250 (lb) or less except when shown.

NOTES-
1) Unbalanced roof live loads have been considered for this design.
2) Wind: ASCE 7-05; 100mph; TCDL=6.0psf; BCDL=5.0psf; h=15ft; Cat. II; Exp C; enclosed; MWFRS (low-rise) and C-C Exterior(2) zone;C-C for members and forces & MWFRS for reactions shown; Lumber DOL=1.60 plate grip DOL=1.60
3) This truss has been designed for a 10.0 psf bottom chord live load nonconcurrent with any other live loads.
4) * This truss has been designed for a live load of 20.0psf on the bottom chord in all areas with a clearance greater than 6-0-0 between the bottom chord and any other members.
5) Provide mechanical connection (by others) of truss to bearing plate capable of withstanding 100 lb uplift at joint(s) 1, 3.
6) Non Standard bearing condition. Review required.

October 22,2018

ENGINEERING BY TRENCO A MiTek Affiliate
818 Soundside Road
Edenton, NC 27932

Job	Truss	Truss Type	Qty	Ply	Jason Price / Campbell Pointe Bldg. 25
J0918-4429	VP01	VALLEY	3	1	E12341650 Job Reference (optional)

Comtech, Inc., Fayetteville, NC 28309 8.130 s Mar 11 2018 MiTek Industries, Inc. Mon Oct 22 15:13:45 2018 Page 1
ID:ZzXTyMvxB55ZLn?FA7qN0rzLZck-dxSVcTx?k8TTSVxjNjtT8RyC4Ndq57V0dOukoNyQq44

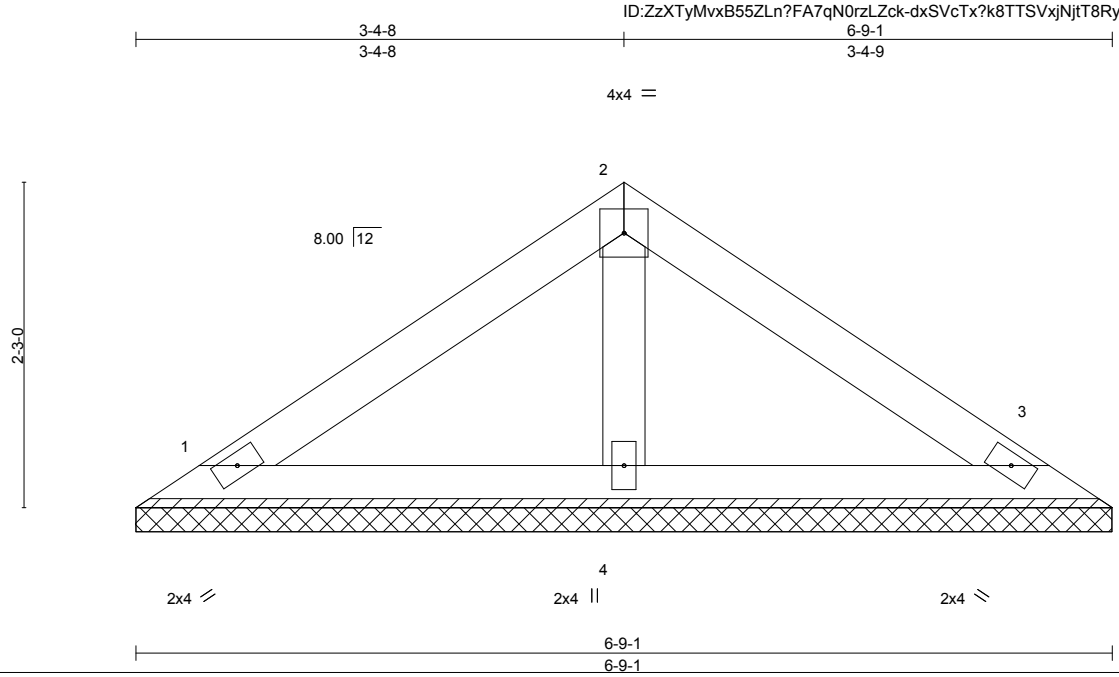

LOADING (psf)		SPACING- 2-0-0		CSI.		DEFL. in (loc) l/defl L/d		PLATES GRIP
TCLL	20.0	Plate Grip DOL	1.15	TC	0.11	Vert(LL) n/a - n/a 999		MT20 244/190
TCDL	10.0	Lumber DOL	1.15	BC	0.06	Vert(TL) n/a - n/a 999		
BCLL	0.0 *	Rep Stress Incr	YES	WB	0.03	Horz(TL) 0.00 3 n/a n/a		
BCDL	10.0	Code IRC2009/TPI2007		Matrix-P				Weight: 23 lb FT = 20%

LUMBER-
TOP CHORD 2x4 SP No.1
BOT CHORD 2x4 SP No.1
OTHERS 2x4 SP No.3

BRACING-
TOP CHORD Structural wood sheathing directly applied or 6-0-0 oc purlins.
BOT CHORD Rigid ceiling directly applied or 10-0-0 oc bracing.

REACTIONS. (lb/size) 1=127/6-9-1, 3=127/6-9-1, 4=210/6-9-1
Max Horz 1=-54(LC 4)
Max Uplift 1=-22(LC 6), 3=-26(LC 7)

FORCES. (lb) - Max. Comp./Max. Ten. - All forces 250 (lb) or less except when shown.

NOTES-
1) Unbalanced roof live loads have been considered for this design.
2) Wind: ASCE 7-05; 100mph; TCDL=6.0psf; BCDL=5.0psf; h=15ft; Cat. II; Exp C; enclosed; MWFRS (low-rise) and C-C Exterior(2) zone;C-C for members and forces & MWFRS for reactions shown; Lumber DOL=1.60 plate grip DOL=1.60
3) This truss has been designed for a 10.0 psf bottom chord live load nonconcurrent with any other live loads.
4) * This truss has been designed for a live load of 20.0psf on the bottom chord in all areas with a clearance greater than 6-0-0 between the bottom chord and any other members.
5) Provide mechanical connection (by others) of truss to bearing plate capable of withstanding 100 lb uplift at joint(s) 1, 3.
6) Non Standard bearing condition. Review required.

October 22,2018

ENGINEERING BY TRENCO A MiTek Affiliate
818 Soundside Road
Edenton, NC 27932

Job	Truss	Truss Type	Qty	Ply	Jason Price / Campbell Pointe Bldg. 25
J0918-4429	VP02	VALLEY	3	1	E12341651 Job Reference (optional)

Comtech, Inc., Fayetteville, NC 28309 8.130 s Mar 11 2018 MiTek Industries, Inc. Mon Oct 22 15:13:46 2018 Page 1
ID:ZzXTyMvxB55ZLn?FA7qN0rzLZck-570tqpydVRbK3fWvwQOihfVODny_qaBAs2dHKpyQq43

1-10-8 | 3-9-1
1-10-8 | 1-10-9

Scale = 1:9.0

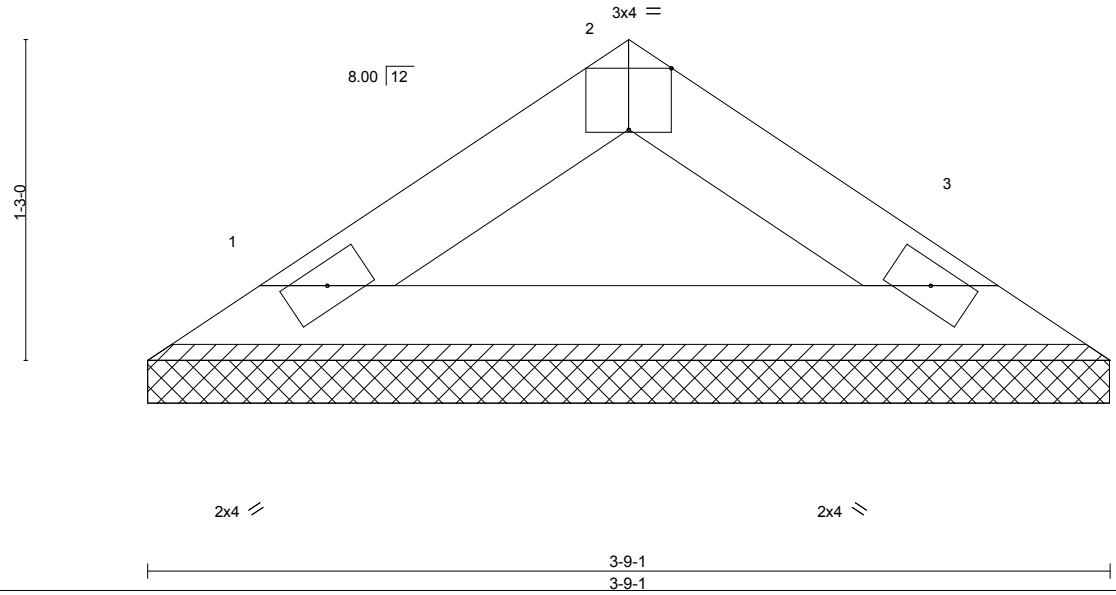

Plate Offsets (X,Y)-- [2:0-2-0,Edge]

LOADING (psf)		SPACING- 2-0-0		CSI.		DEFL. in (loc) l/defl L/d		PLATES	GRIP
TCLL	20.0	Plate Grip DOL	1.15	TC	0.02	Vert(LL) n/a - n/a 999		MT20	244/190
TCDL	10.0	Lumber DOL	1.15	BC	0.07	Vert(TL) n/a - n/a 999			
BCLL	0.0 *	Rep Stress Incr	YES	WB	0.00	Horz(TL) 0.00 3 n/a n/a			
BCDL	10.0	Code IRC2009/TPI2007		Matrix-P				Weight: 11 lb	FT = 20%

LUMBER-
TOP CHORD 2x4 SP No.1
BOT CHORD 2x4 SP No.1

BRACING-
TOP CHORD Structural wood sheathing directly applied or 3-9-1 oc purlins.
BOT CHORD Rigid ceiling directly applied or 10-0-0 oc bracing.

REACTIONS. (lb/size) 1=112/3-9-1, 3=112/3-9-1
Max Horz 1=-26(LC 4)
Max Uplift 1=-8(LC 6), 3=-8(LC 7)

FORCES. (lb) - Max. Comp./Max. Ten. - All forces 250 (lb) or less except when shown.

NOTES-
1) Unbalanced roof live loads have been considered for this design.
2) Wind: ASCE 7-05; 100mph; TCDL=6.0psf; BCDL=5.0psf; h=15ft; Cat. II; Exp C; enclosed; MWFRS (low-rise) and C-C Exterior(2) zone;C-C for members and forces & MWFRS for reactions shown; Lumber DOL=1.60 plate grip DOL=1.60
3) This truss has been designed for a 10.0 psf bottom chord live load nonconcurrent with any other live loads.
4) * This truss has been designed for a live load of 20.0psf on the bottom chord in all areas with a clearance greater than 6-0-0 between the bottom chord and any other members.
5) Provide mechanical connection (by others) of truss to bearing plate capable of withstanding 100 lb uplift at joint(s) 1, 3.
6) Non Standard bearing condition. Review required.

October 22,2018

ENGINEERING BY TRENCO A MiTek Affiliate
818 Soundside Road
Edenton, NC 27932

Symbols

PLATE LOCATION AND ORIENTATION

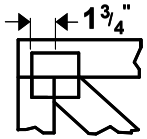

Center plate on joint unless x, y offsets are indicated. Dimensions are in ft-in-sixteenths. Apply plates to both sides of truss and fully embed teeth.

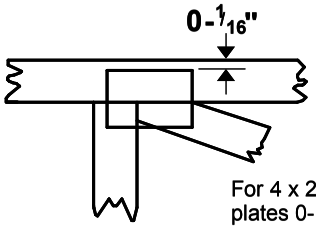

For 4 x 2 orientation, locate plates 0- 1/16" from outside edge of truss.

This symbol indicates the required direction of slots in connector plates.

*** Plate location details available in MiTek 20/20 software or upon request.**

PLATE SIZE

4 x 4

The first dimension is the plate width measured perpendicular to slots. Second dimension is the length parallel to slots.

LATERAL BRACING LOCATION

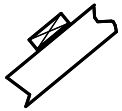

Indicated by symbol shown and/or by text in the bracing section of the output. Use T or I bracing if indicated.

BEARING

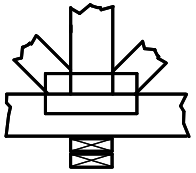

Indicates location where bearings (supports) occur. Icons vary but reaction section indicates joint number where bearings occur. Min size shown is for crushing only.

Industry Standards:

ANSI/TPI1: National Design Specification for Metal Plate Connected Wood Truss Construction.
DSB-89: Design Standard for Bracing.
BCSI: Building Component Safety Information, Guide to Good Practice for Handling, Installing & Bracing of Metal Plate Connected Wood Trusses.

Numbering System

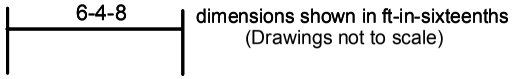

dimensions shown in ft-in-sixteenths
(Drawings not to scale)

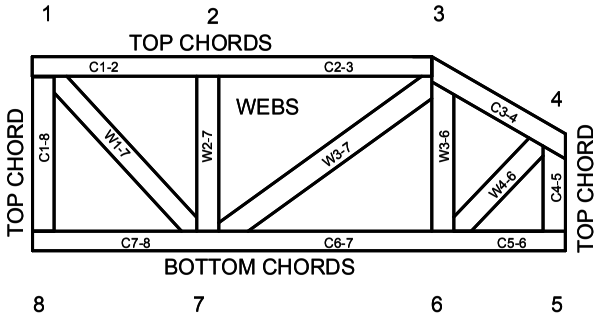

JOINTS ARE GENERALLY NUMBERED/LETTERED CLOCKWISE AROUND THE TRUSS STARTING AT THE JOINT FARTHEST TO THE LEFT.

CHORDS AND WEBS ARE IDENTIFIED BY END JOINT NUMBERS/LETTERS.

PRODUCT CODE APPROVALS

ICC-ES Reports:

ESR-1311, ESR-1352, ESR1988
ER-3907, ESR-2362, ESR-1397, ESR-3282

Trusses are designed for wind loads in the plane of the truss unless otherwise shown.

Lumber design values are in accordance with ANSI/TPI 1 section 6.3 These truss designs rely on lumber values established by others.

MiTek

ENGINEERING BY TRENCO
A MiTek Affiliate

General Safety Notes

Failure to Follow Could Cause Property Damage or Personal Injury

1. Additional stability bracing for truss system, e.g. diagonal or X-bracing, is always required. See BCSI.
2. Truss bracing must be designed by an engineer. For wide truss spacing, individual lateral braces themselves may require bracing, or alternative Tor I bracing should be considered.
3. Never exceed the design loading shown and never stack materials on inadequately braced trusses.
4. Provide copies of this truss design to the building designer, erection supervisor, property owner and all other interested parties.
5. Cut members to bear tightly against each other.
6. Place plates on each face of truss at each joint and embed fully. Knots and wane at joint locations are regulated by ANSI/TPI 1.
7. Design assumes trusses will be suitably protected from the environment in accord with ANSI/TPI 1.
8. Unless otherwise noted, moisture content of lumber shall not exceed 19% at time of fabrication.
9. Unless expressly noted, this design is not applicable for use with fire retardant, preservative treated, or green lumber.
10. Camber is a non-structural consideration and is the responsibility of truss fabricator. General practice is to camber for dead load deflection.
11. Plate type, size, orientation and location dimensions indicated are minimum plating requirements.
12. Lumber used shall be of the species and size, and in all respects, equal to or better than that specified.
13. Top chords must be sheathed or purlins provided at spacing indicated on design.
14. Bottom chords require lateral bracing at 10 ft. spacing, or less, if no ceiling is installed, unless otherwise noted.
15. Connections not shown are the responsibility of others.
16. Do not cut or alter truss member or plate without prior approval of an engineer.
17. Install and load vertically unless indicated otherwise.
18. Use of green or treated lumber may pose unacceptable environmental, health or performance risks. Consult with project engineer before use.
19. Review all portions of this design (front, back, words and pictures) before use. Reviewing pictures alone is not sufficient.
20. Design assumes manufacture in accordance with ANSI/TPI 1 Quality Criteria.