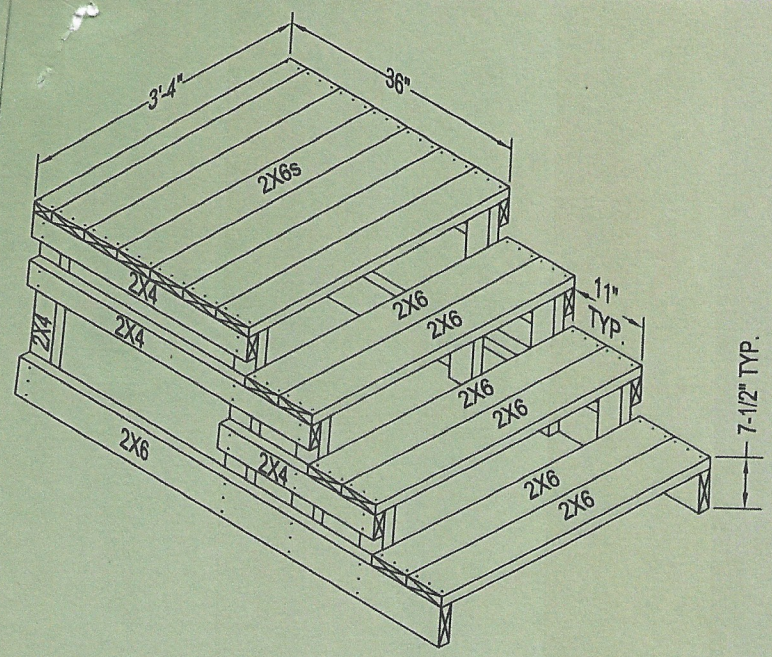

NOTES:

1. FASTEN TOGETHER WITH 3" HOT-DIPPED GALVANIZED NAILS (SCREW-SHANK).
2. STAIR / LANDING STRUCTURE IS DESIGNED TO BE SET DIRECTLY ON THE GROUND WITHOUT FOOTINGS UNDERNEATH.
3. REFER TO THE CURRENT EDITION OF THE "NC REGULATIONS FOR MANUFACTURED HOMES".
4. USE #2 PRIME TREATED WOOD.

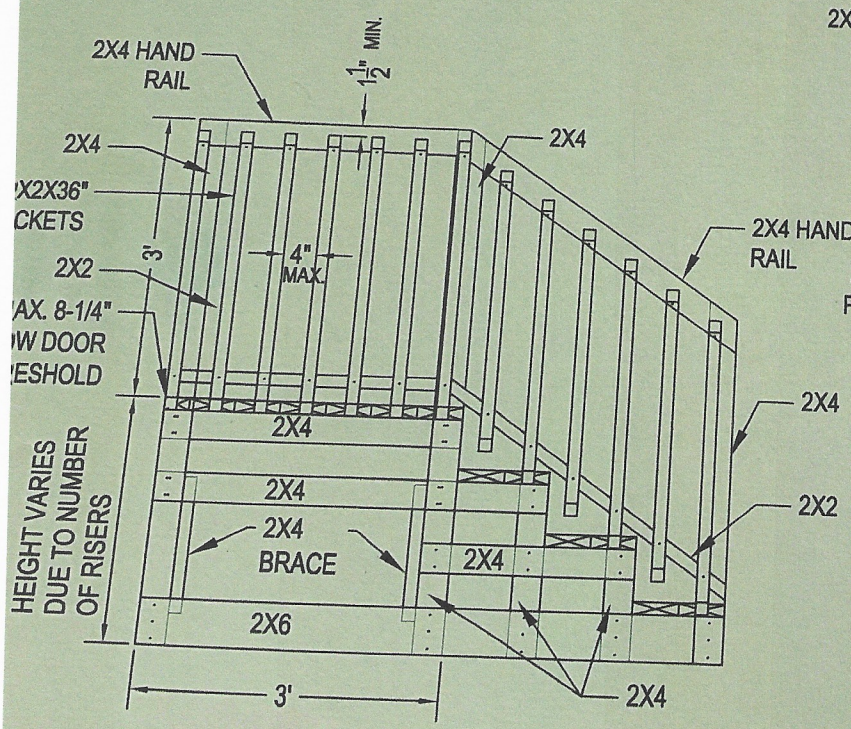

SIDE VIEW

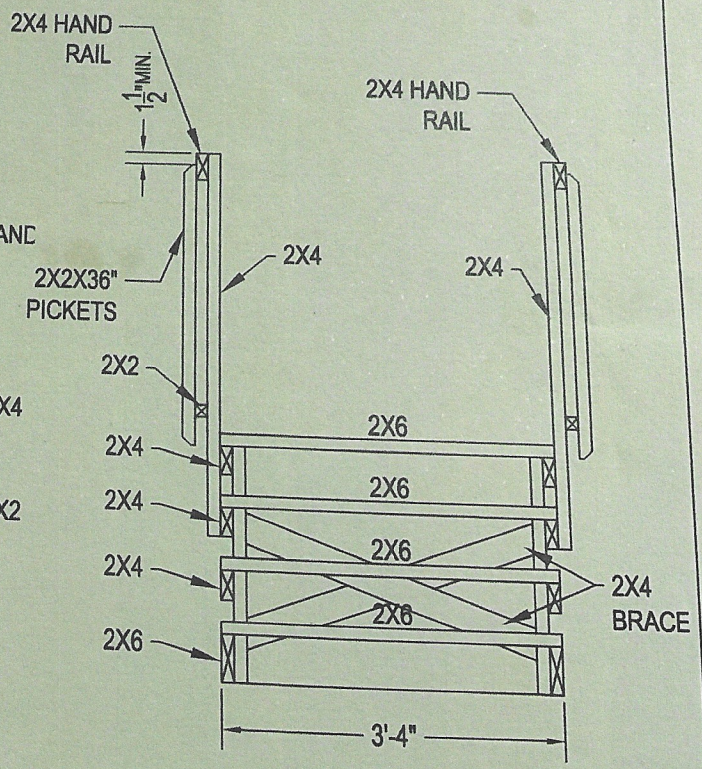

FRONT VIEW

DERSON, PE.
pewa Street
NC 28358
) 671-9530
618-0838
il:
gpa@gmail.com
13325 (NC)
11492 (SC)

STAIR / PLATFORM DETAILS FOR

SOUTHEASTERN STEP & DECK, INC.

1907 EAST FIFTH STREET
LUMBERTON, N.C. 28358

NORTH CAROLINA PROFESSIONAL SEAL 13325 ENGINEER LARRY W. ANDERSON

NO.	DATE	REVISION

PROJ. NO: S/E STEP	SCALE: 1/2"=1'	
DWG. NO:	DWG. BY: DJ	SHEET NO 1 OF 1
DATE:1-24-2020	APPROVED:LWA	

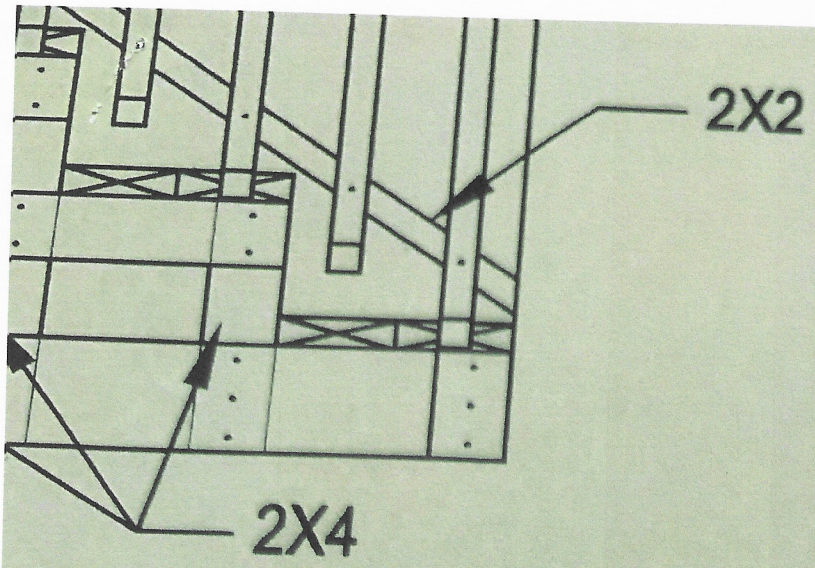

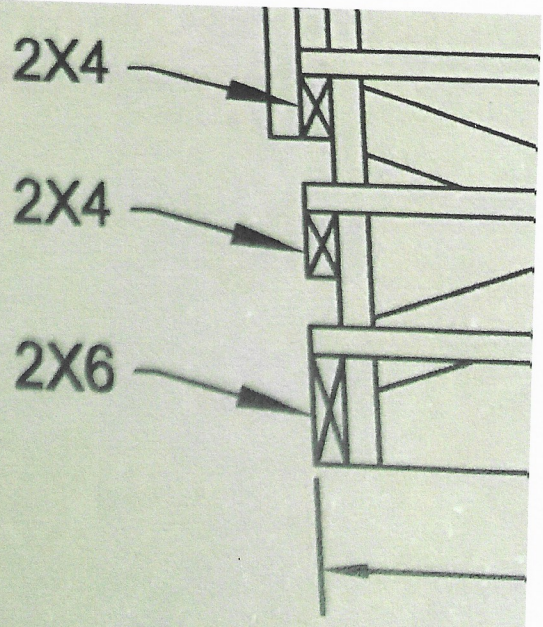

FOR

EP &

NORTH CAROLINA
PROFESSIONAL
SEAL
13325
ENGINEER
LARRY W. ANDERSON

1/26/20

NO.	DATE

PROJ. NO:
S/E STEP

DWG. NO

DATE:1-