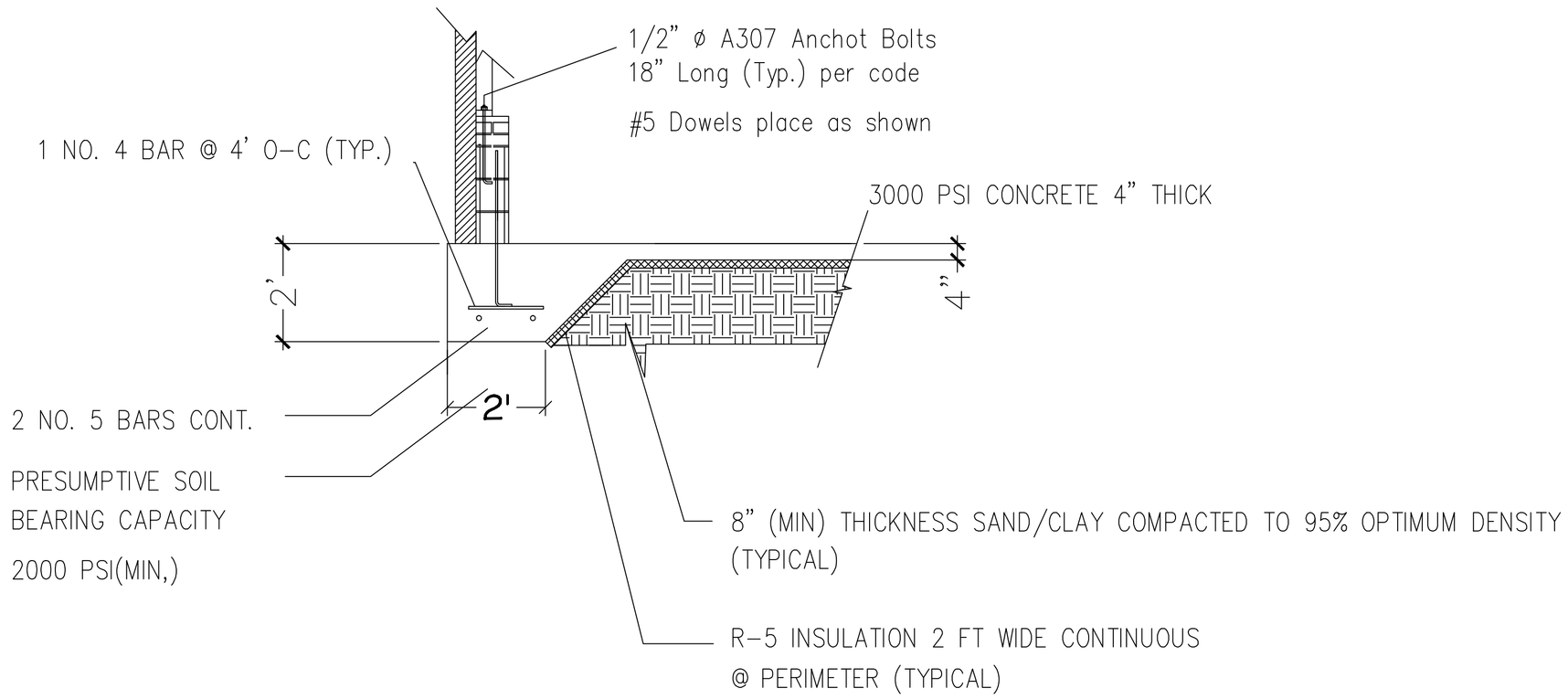

FOOTING CROSS SECTION

Scale: 1/2"=1'-0"

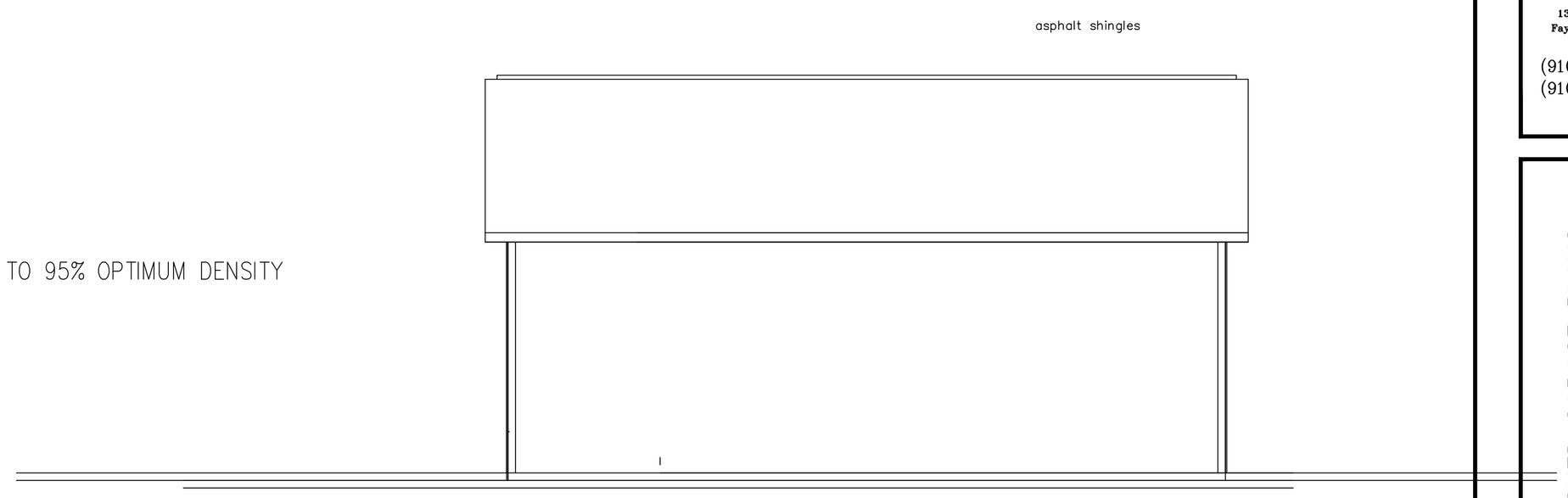

RIGHT SIDE ELEVATION

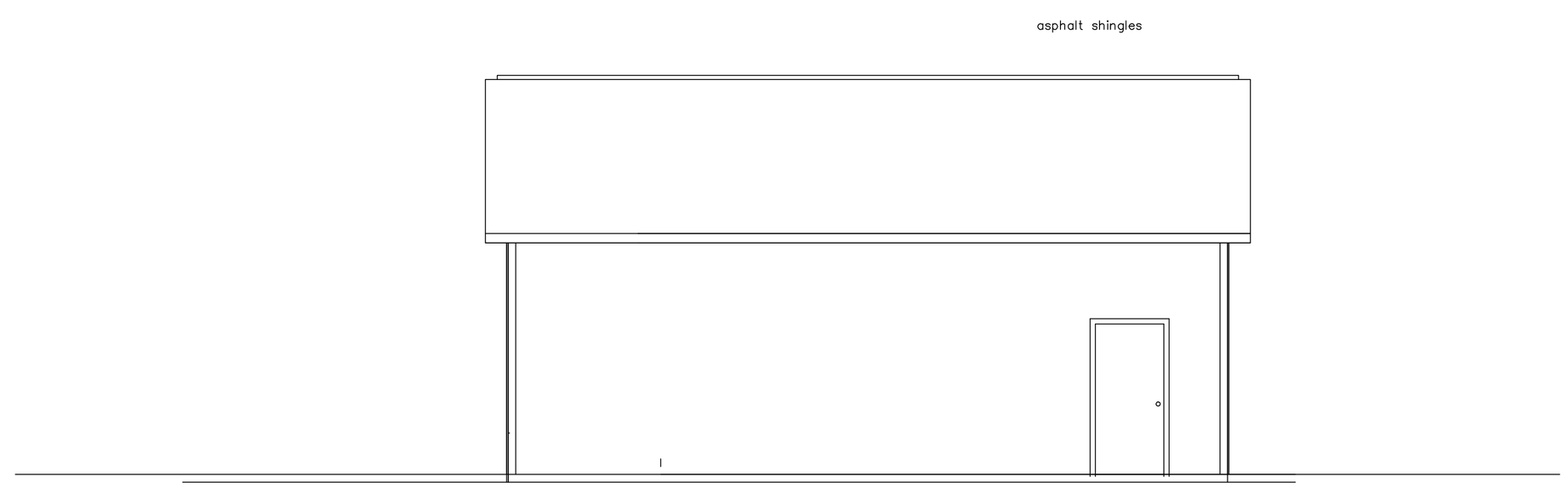

LEFT SIDE ELEVATION

SCALE 1/4" = 1'-0"

LEFT SIDE ELEVATION

FIRM LICENSE NO. C-3132

M. A. COLVIN
ENGINEERING
AND
CONSULTING, INC.
1300 B PAMALEE DRIVE
Fayetteville, North Carolina 28303
(910)223-0052 (OFFICE)
(910)223-0804 (FAX)

Project Name: DETACHED GARAGE PLANS
150 UNION CIRCLE

Project Location: LILLINGTON NC 27546

Drawing Name:

DETACHED GARAGE PLANS

FINAL DRAWING FOR REVIEW PURPOSES ONLY

DRAWINGS AND THE DESIGN ARE THE PROPERTY OF THE ENGINEER WHETHER THE PROJECT FOR WHICH THEY ARE PREPARED IS EXECUTED OR NOT. THE DRAWINGS SHALL NOT BE USED BY THE PROJECT OWNER OR ANYONE ELSE FOR ANY OTHER PROJECT.

PROJECT NO:
DRAWN BY: M. Colvin
DATE: 07/05/2019
REVISIONS:

SHEET NO:
B-2