NTA INC.

ENGINEERS
PLANNERS
CONSULTANTS

305 NORTH OAKLAND AVENUE · P.O. BOX 490 · NAPPANEE, INDIANA 46550PHONE: 574-773-7975
WEB: WWW.NTAINC.COM FAX: 574-773-2732

July 31, 2018

Mr. Mike Hamm, P.E.
State of North Carolina
Department of Insurance
Manufactured Building Division
322 Chapanoke RD.
Suite 200
Raleigh, NC 27603

RE: Cavalier Homes #976

Model: 09-A6401-PLAT-51373-NC-100-OFF

Dear Mr. Hamm,

Enclosed, you will find one (1) copy of the above mentioned project for your files.

Should you have any questions or comments, please contact me at your earliest convenience.

Sincerely,

David Richter

David Richter
Account Manager

Enclosures

STATE OF NORTH CAROLINA

APPROVED BY
NTA INC.
7/31/2018
Approval of this document does not authorize or approve any deviation or deviations from the requirements of applicable State Laws.
David Richter

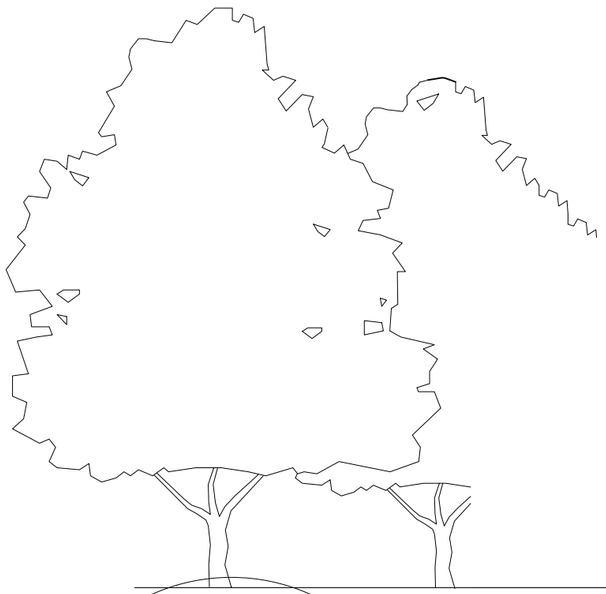

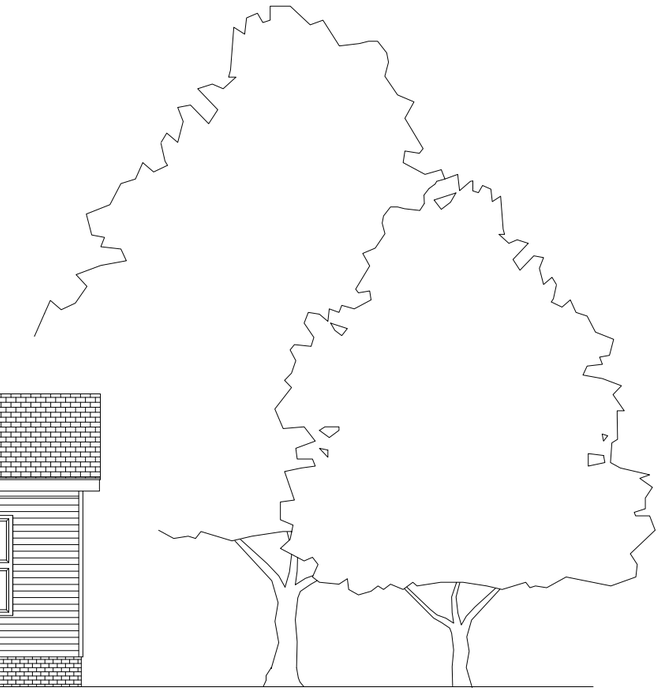

FRONT ELEVATION

100 MPH - OFF FRAME
7/25/18
64 x 32 - 3 BDRM - 2 BATH
7609A6401-NC
SN: 51373

CAVALIER HOME BUILDERS

NASHVILLE DIVISION

MODEL PLAN - 7609A6401-NC

NORTH CAROLINA

100 MPH - OFF FRAME

3 BEDROOM - 2 BATH

SN: 51373

Cavalier Home Builders
NASHVILLE DIVISION
1001 BUSINESS 64 HWY.
NASHVILLE, NC 27856
PH. 1-252-459-7026
FAX. 1-252-459-4315

REVISIONS:	PRINT DATE: 7/25/18	APPROVED BY:	NORTH CAROLINA	TITLE: COVER SHEET	MODEL NO: 7609A6401-NC
DESIGNED FOR: 100 MPH - OFF FRAME	SCALE: N.T.S.	DRAWN BY: R.C.		HOUSE SIZE: 64 x 32 - 3 BDRM - 2 BATH	DRAWING NO: 1 of 9

CODE REFERENCES:

NORTH CAROLINA

North Carolina Residental Code, 2012 Edition
North Carolina Electrical Code, 2017 Edition

INSTALLED APPLIANCE LIST:

APPLIANCE	MANUFACTURER	MODEL NUMBER
DISHWASHER	FRIGIDAIRE	FFID2423RS
REFRIGERATOR	FRIGIDAIRE	FFHS2622M
RANGE	FRIGIDAIRE	FFEF3048LS
COMFORT HEATING	N/A	N/A
WATER HEATER	STATE	SC152SORTE30
SMOKE DETECTORS	FIRST ALERT	9120B
FIREPLACE (OPTION)	TEMCO	TLC36-3MB
MICROWAVE/ RANGE HOOD	FRIGIDAIRE	FFMO1611LS

**** WITH OPTIONAL RANGE & WALL OVEN ****

WALL OVEN		
COOK TOP		

FIRE STOPPING

ALL LOCATIONS SUCH AS PENETRATIONS THROUGH FLOORS OR CEILINGS MUST BE FIRE BLOCKED USING EITHER INSULATION OR CAULK SEALANTS. (PER. 2012 NORTH CAROLINA RESIDENTIAL CODE - R302.11)

ATTENTION LOCAL INSPECTIONS DEPT:

IF THIS STRUCTURE IS IN A THERMAL ZONE MORE STRINGENT THAN THAT LISTED ON THESE PLANS, IS SET ON PILINGS, OR IS SET UP AT A MOUNTAIN REGION OR COASTAL HIGH HAZARD SITE SUCH THAT WIND OR OTHER DESIGN PARAMETERS ARE INCREASED, THE DESIGN MUST BE DETERMINED TO BE ADEQUATE FOR ACTUAL SITE CONDITIONS. ALTERATIONS MAY BE REQUIRED TO BRING THE HOME INTO COMPLIANCE WITH THE MORE STRINGENT CONDITIONS.

THE FOLLOWING ITEMS HAVE NOT BEEN COMPLETED BY CAVALIER HOMES, HAVE NOT BEEN INSPECTED BY NTA INC., AND ARE NOT CERTIFIED BY THE NC MODULAR LABEL. CODE COMPLIANCE MUST BE DETERMINED AT THE LOCAL LEVEL.

1. ELECTRICAL FIXTURE (CEILING FANS)
2. HEAT PUMP TO INCLUDE CROSSOVER CONNECTIONS.
3. CHIMNEY TERMINATION COMPLETION.
4. STORM DOORS
5. V-BOX FOR HEATING SYSTEM INSTALLED BY OTHERS.
6. DRYER VENT INSTALLED ON SITE.
7. FLOOD-LIGHTS
8. MAIN TRUNK OF H.V.A.C. ALONG WITH BRANCH DUCTS TO REGISTER BOOTS TO BE COMPLETED ON-SITE FOR OFF-FRAME ONLY.
9. WATER HEATER TO BE INSTALLED ON SITE BY OTHERS.
10. HEAT PUMP

2012 NCRC (R612.2) - In dwelling units, where the opening of an operable window is located more than 72 above the finished grade or surface below, the lowest part of the clear opening of the window shall be a minimum of 24 inches above the finished floor of the room in which the window is located. Operable sections of the windows shall not permit openings that allow passage of a 4" diameter sphere where such openings are located within 24" of the finished floor.

ELECTRICAL NOTES:

1. ALL BATH VENT FANS SHALL TERMINATE TO THE EXTERIOR OF THE BUILDING. (THIS EXCLUDES KITCHEN CHARCOAL VENT RANGE HOOD)
2. BATHROOM VENT FANS SHALL PROVIDE 50 CFM.
3. KITCHEN VENT FANS SHALL PROVIDE 220 CFM.
4. LIGHTING PROVIDED IN CLOSETS SHALL BE 18" MIN. FROM SHELVING.
5. CEILING FANS SHALL BE INSTALLED WITH BLADES NO LOWER THAN 7'-0" A.F.F.

****REFER TO THE MODULAR DATA SHEET FOR ITEMS SUBJECT TO LOCAL INSPECTION****

A. LATERIAL & VERTICAL CONNECTION = FOUNDATION PAGES
B. ROOF SET-UP & CONNECTION = - SEE ATTACHED
C. VERTICAL & HORIZONTAL PLUMBING CONNECTION BETWEEN MODULES IS LOCATED ON - SEE ATTACHED
D. VERTICAL & HORIZONTAL MECHANICAL CONNECTION IS LOCATED ON - SEE ATTACHED
E. ELECTRICAL CONNECTION BETWEEN MODULES IS LOCATED ON - SEE ATTACHED

THIS HOME MEETS and/or EXCEEDS THE REQUIREMENTS SET FORTH BY 2012 NC CODES FOR RODENT PROOFING. ALL SAID AREAS ARE TO BE COMPLETED BY THE MANUFACTURER.

INDEX OF DRAWINGS

(100 MPH - OFF FRAME)

**** THIS HOME IS NOT DESIGNED FOR PLACEMENT IN COASTAL HIGH HAZARD AREAS OR OCEAN HAZARD AREAS ****

GENERAL NOTES:

1. THIS UNIT MUST BE CONNECTED TO A PUBLIC WATER SUPPLY AND SEWER SYSTEM IF THESE ARE AVAILABLE.
2. CONSTRUCTION TYPE: VB UNPROTECTED
3. DESIGNED FLOOR LIVE LOAD: 40 P.S.F.
4. DESIGNED ROOF LIVE LOAD: 20 P.S.F.
5. DESIGNED WIND VELOCITY: (100 MPH w/EXPOSURE C)
6. MIN. HALLWAY WIDTH IS 36"
7. ALL GLASS IN DOORS, SIDELIGHTS, TUB, SHOWER ENCLOSURES SHALL BE SAFETY GLAZED.
8. INTERIOR DOORS SHALL BE UNDERCUT 1" A.F.F. OR EQUAL RETURN AIR GRILLS INSTALLED.
9. ALL SUPPLY AIR REGISTERS SHALL BE ADJUSTABLE.
10. OCCUPANCY CLASSIFICATION: SINGLE FAMILY DWELLING
11. ALL LOCATIONS SUCH AS PENETRATIONS THRU FLOORS OR CEILINGS MUST BE FIRE BLOCKED USING EITHER INSULATION OR CAULK SEALAN.T.S..
12. INTERIOR CEILING FINISH SHALL BE SPRAYED TEXTURE.
13. BATH EXHAUST IS UL LISTED E17814 (50CFM) MAXIMUM VELOCITY IS 4000 F.P.M. MAXIMUM POS. PRESSURE 6" W.C. MAXIMUM NEGATIVE PRESSURE 1/2" W.C.
14. RANGE HOOD EXHAUST IS ALLURE 1 WITH 2 SPEED ROCKER AND CHARCOAL FILTER. 220 CFM AT HIGH SPEED.
15. DRYER EXHAUST IS INSTALLED ON SITE BY OTHERS. EXHAUST INSTALLED BY MANUFACTURER MEETS SECTION 504.6 OF THE 2012 NC RESIDENTIAL CODE (4" DIAMETER, SMOOTH INTERIOR FINISH, UNSCREENED BACKDRAFT DAMPER.)

TRANSITION DUCT (FLEX DUCT SUPPLIED BY CUSTOMER) SHALL BE 4" DIAMETER CUT TO LENGTH AND NOT TO EXCEED 8' IN LENGTH AND MUST NOT BE CONCEALED. TRANSITION DUCT INSTALLED IN ACCORDANCE WITH DRYER DUCT INSTALLATION INSTRUCTIONS (SUPPLIED BY FLEX DUCT MANUFACTURER)

DRYER VENT & BATH EXHAUST INSTRUCTIONS:

A. "RESIDENTIAL" DRYER EXHAUST DUCTS WHICH ARE NOT DESIGNED FOR A SPECIFIC DRYER SHALL BE CONSTRUCTED OF MINIMUM 0.0157 INCH GALVANIZED STEEL OR OTHER NONCOMBUSTIBLE MATERIAL OF EQUIVALENT STRENGTH AND CORROSION RESISTANCE. (SECTION 504.6 OF THE 2012 NORTH CAROLINA MECHANICAL CODE)

B. THE DRYER EXHAUST "DUCTS SHALL HAVE SMOOTH INTERIOR FINISH WITH JOINTS. RUNNING IN THE DIRECTION OF THE AIRFLOW (SECTION 504.6)

C. THE MINIMUM SIZE OF THE EXHAUST DUCT SHALL BE 4" (SECTION 504.6)

D. DRYER EXHAUST DUCTS FOR CLOTHES DRYERS SHALL TERMINATE ON THE OUTSIDE OF THE BUILDING AND SHALL BE EQUIPPED WITH A BACKDRAFT DAMPER. (SECTION 504.4)

E. THE BACKDRAFT DAMPER MUST BE UNSCREENED AND A MINIMUM OF 4" (SECTION 504.6)

F. DUCTS SHALL NOT BE CONNECTED OR INSTALLED WITH SHEET METAL SCREWS (SECTION 504.4)

G. THE ENTIRE SYSTEM SHALL BE PROPERLY SECURED IN PLACE AND SHALL TERMINATE NOT LESS THAN 12" ABOVE FINISHED GRADE. (SECTION 504.6)

H. A LISTED AND LABELED CLOTHES DRYER TRANSITION DUCT MUST BE USED TO CONNECT THE APPLIANCE TO THE EXHAUST DUCT. (SECTION 504.6)

I. TRANSITION DUCTS SHALL NOT BE CONCEALED WITHIN CONSTRUCTION. (SECTION 504.6)

J. TRANSITION DUCTS MUST REMAIN ENTIRELY WITHIN THE ROOM THE DRYER IS INSTALLED. (SECTION 504.6)

K. TRANSITION DUCTS ARE TO BE CUT TO LENGTH AND MAY NOT EXCEED 8' IN LENGTH. (SECTION 504.6)

L. ALL PENETRATIONS THROUGH THE BUILDING THERMAL ENVELOPE SHALL BE CAULKED, GASKETED...OR OTHERWISE SEALED (SECTION N1102.4.1 OF THE 2012 NORTH CAROLINA RESIDENTIAL CODE)

M. THE MAXIMUM LENGTH OR RIGID METAL DUCT SHALL BE IN ACCORDANCE WITH SECTION 504.6 OF THE 2012 NORTH CAROLINA RESIDENTIAL CODE

THERMAL ZONE INFORMATION:

CEILING: R-33 (BLOWN) FIBERGLASS
WALLS: R-15 KRAFTBACK
FLOOR: R-22 UNFACED FIBERGLASS ROLLED

APPROVED BY
NTA INC. 7/31/2018
Approval of this document does not authorize or approve any deviation or deviations from the requirements of applicable State Laws.
David Richter

(MEAN ROOF HGT: 22.2' MAX)

ELECT LOAD CALCS. ATTACHED
RESCHECK ATTACHED
HEAT CALCS. ATTACHED
TRUSS ATTACHED
FOUNDATION CALCS. ATTACHED
SET-UP DETAILS ATTACHED

SN: 51373

Cavalier Home Builders
NASHVILLE DIVISION
1001 BUSINESS 64 HWY.
NASHVILLE, NC 27856
PH. 1-252-459-7026
FAX. 1-252-459-4315

REVISIONS:	PRINT DATE: 7/25/18	APPROVED BY:	NORTH CAROLINA	TITLE: GENERAL NOTES	MODEL NO: 7609A6401-NC
DESIGNED FOR: 100 MPH - OFF FRAME	SCALE: N.T.S.	DRAWN BY: R.C.		HOUSE SIZE: 64 x 32 - 3 BDRM - 2 BATH	DRAWING NO: 2 of 9

HEADER / SPANS

H-1 = WINDOW / DOOR HEADER (2) 3 x 2's #3 S.P.F.[1] w/ JACKS FLAT
H-2 = WINDOW / DOOR HEADER (3) 3 x 2's #3 S.P.F.[1] w/ JACKS FLAT
H-3 = WINDOW / DOOR HEADER (2) 2 x 8's #2 S.P.F.[1] EDGE

H-5 = RIDGE BEAM - 1.5 x 18" LVL BEAM[2]

H-7 = (2) COLUMN STUD #3 SPF[3]

[1] MODULAR MANUAL - Pg. EW-20.3.R.K.E.22.20
[2] MODULAR MANUAL - Pg. RC-60.3.R.K.M._.20
[3] MODULAR MANUAL - Pg. MW-20.3.R.K.E.47.20

INTERIOR DOOR ROUGH OPENINGS

A = 19 3/4" x 83 3/8"
B = 25 3/4" x 83 3/8"
C = 29 3/4" x 83 3/8"
D = 31 3/4" x 83 3/8"
F = 61 3/4" x 83 3/8"
2) 30" DOORS

EXTERIOR DOOR ROUGH OPENINGS

H = 37 5/8" x 82 1/4"
J = 72" x 80"
K = 74 1/4" x 82 1/4"

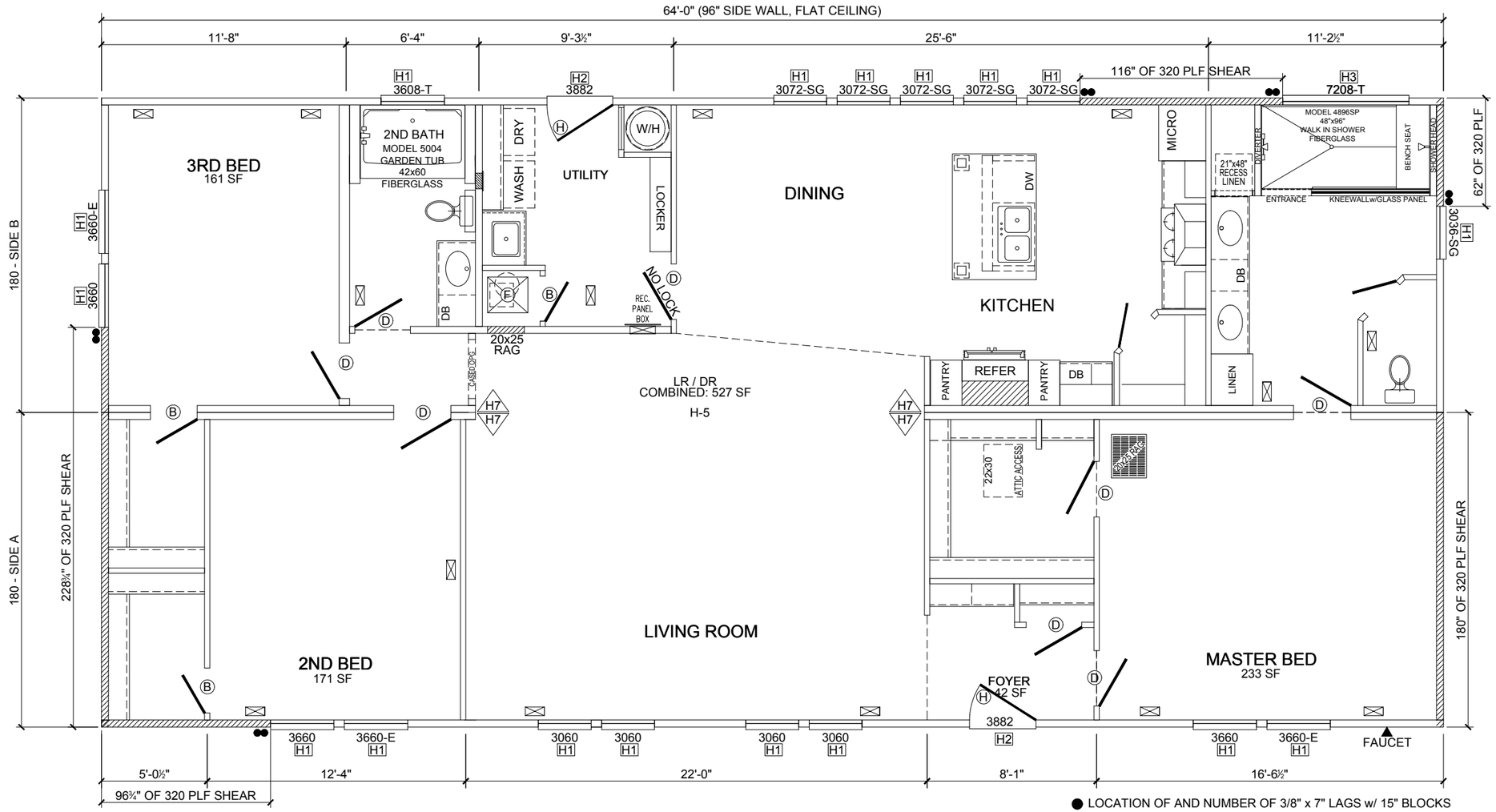

APPROVED BY
NTA INC.
7/31/2018
Approval of this document does not authorize or approve any deviation or deviations from the requirements of applicable State Laws.
David Richter

SHEARWALL CONSTRUCTION AND FASTENING INFORMATION

WINDSPEED 100 MPH		S/W TO WALL & CEILING FASTENING NO OVERLAP			SHEAR WALL STRAPPING AND FASTENING REQUIREMENTS. DETAIL "C"		SHEARWALL BLOCKING DETAIL "D" REQUIREMENTS		S/W TO FLOOR FASTENING WITHOUT OVERLAP			S/W TO FLOOR FASTENING WITH OVERLAP		
SW. ID.	PANEL FASTENING	#8x3"	.131"x3"	.162x3"	# CS-16 HOLD DOWN STRAPS PER FREE END	# FASTENERS PER EACH END OF STRAPS	NUMBER OF LAGS	BLOCK SIZE	#8x3"	.131"x3"	.162x3"	#8x3"	.131"x3"	.162x3"
320	.131"x2.5" NAILS AT 6/12" O.C.	2.5	2.5	4	2	10(96") 11(108")	2(96") 3(108")	15"(96") 19"(108")	4.5	4.5	7	11	11	16
					(##") DENOTES WALL HEIGHT		(##") DENOTES WALL HEIGHT							
ROOF SHEATHING FASTENING		SW-20-389B.0 (100 MPH)			ROOF DIAPHRAGM CONSTRUCTION		NUMBER OF 2x10 JOIST FOR OFF FRAME							
		ZONE 1	ZONE 2	ZONE 3	ZONE 2 O.H.	ZONE 3 O.H.	SW ID	JOIST QTY PER WALL						
ZONE 1	.131"x2.5" NAILS	6/12	6/12	6/8	6/11	6/7	320	2						
ALL EXTERIOR WALL SHEATHING IS FASTENED PER MANUAL EXCEPT SHEAR AREAS WHICH ARE FASTENED PER ABOVE							0							
ALL EFFECTIVE SHEAR LENGTHS BASED ON SW-31.10._.N.E.17._.[78].1-2 USING ENGINEERED METHOD							0							
UNBLOCK DIAPHRAGM PER SW-20-389B.0 (100 MPH)														
								VERSION 1.2a						

SN: 51373

DOOR SCHEDULE

DUNBARTON 6-PANEL (STORM DOOR) U-VALUE = 0.29
DUNBARTON 9-LITE (STORM DOOR) U-VALUE = 0.44

PATIO / ATRIUM DOOR

"MOSS" - R.O. = 72" x 80" / LIGHT = 34.37 VENT = .037 CFM/FT SQ.

"MOSS" WINDOW SCHEDULE - 1700 / 1800 SERIES

SIZE	ROUGH OPENING	GLASS AREA SQ. FT.	VENT AREA SQ. FT.	MAX. ALLOWABLE ROOM SQ. FT. PER SASH
3036SH	30 1/4" x 36 1/4"	5.50	2.80	68 Sq Ft
3060SH	30 1/4" x 60 1/4"	9.90	5.20	123 Sq Ft
3072PW	30 1/4" x 72 1/4"	12.10	0.00	140 Sq Ft
3608T	36 1/4" x 8 1/4"	0.50	0.00	N/A
3660SH	36 1/4" x 60 1/4"	12.20	6.20	152 Sq Ft
4444PW	44 1/4" x 44 1/4"	10.70	0.00	N/A
6436PW	64 1/4" x 36 1/4"	12.08	2.28	57 Sq Ft
7208T	72 1/4" x 8 1/4"	1.10	0.00	N/A

Cavalier Home Builders
NASHVILLE DIVISION
1001 BUSINESS 64 HWY.
NASHVILLE, NC 27856
PH. 1-252-459-7026
FAX. 1-252-459-4315

REVISIONS:	PRINT DATE: 7/25/18	APPROVED BY:	NORTH CAROLINA	TITLE: MODEL PLAN	MODEL NO: 7609A6401-NC
DESIGNED FOR: 100 MPH - OFF FRAME	SCALE: N.T.S.	DRAWN BY: R.C.		HOUSE SIZE: 64 x 32 - 3 BDRM - 2 BATH	DRAWING NO: 3 of 9

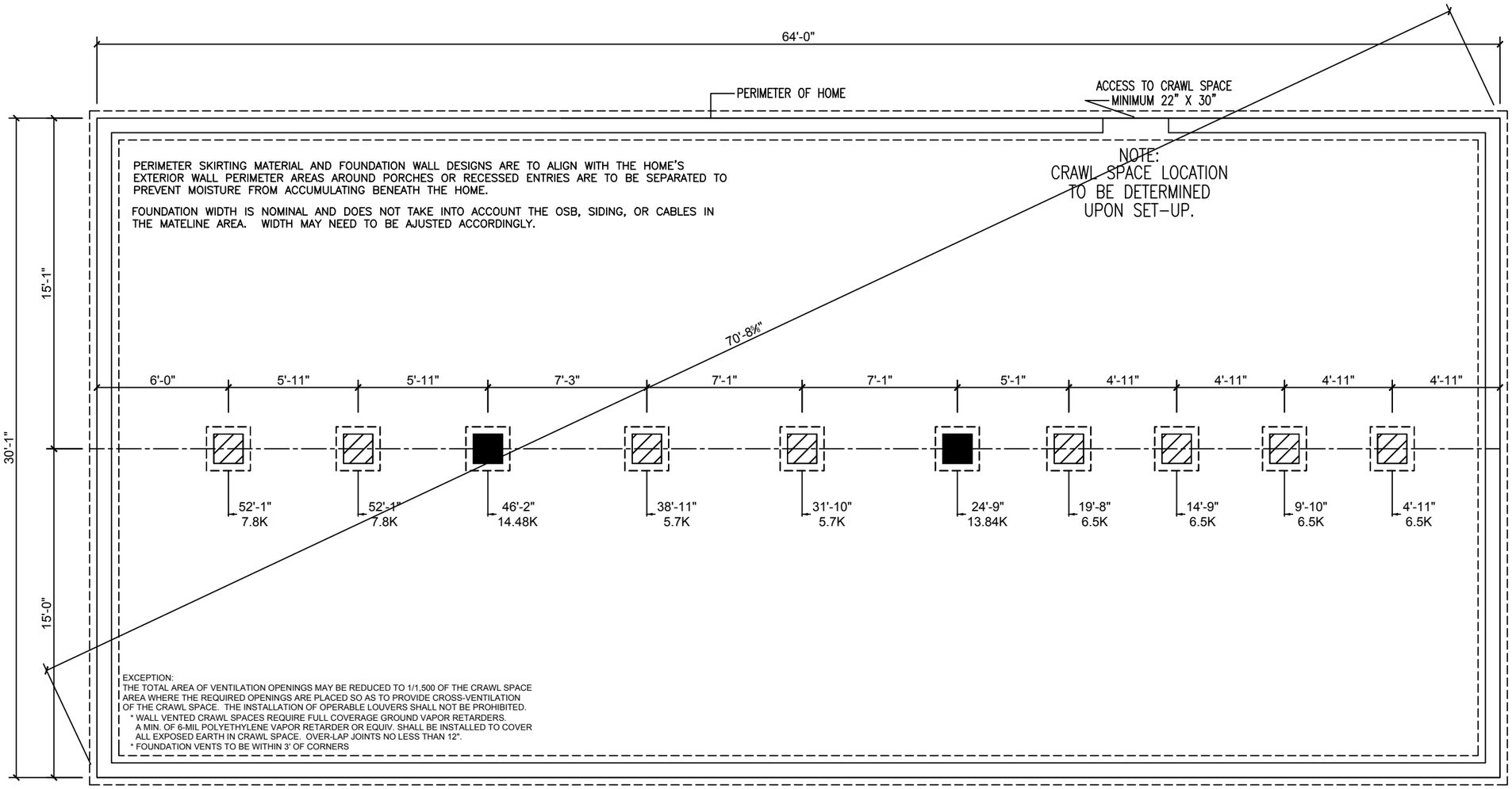

PERIMETER SKIRTING MATERIAL AND FOUNDATION WALL DESIGNS ARE TO ALIGN WITH THE HOME'S EXTERIOR WALL PERIMETER AREAS AROUND PORCHES OR RECESSED ENTRIES ARE TO BE SEPARATED TO PREVENT MOISTURE FROM ACCUMULATING BENEATH THE HOME.

FOUNDATION WIDTH IS NOMINAL AND DOES NOT TAKE INTO ACCOUNT THE OSB, SIDING, OR CABLES IN THE MATELINE AREA. WIDTH MAY NEED TO BE AJUSTED ACCORDINGLY.

EXCEPTION:
THE TOTAL AREA OF VENTILATION OPENINGS MAY BE REDUCED TO 1/1,500 OF THE CRAWL SPACE AREA WHERE THE REQUIRED OPENINGS ARE PLACED SO AS TO PROVIDE CROSS-VENTILATION OF THE CRAWL SPACE. THE INSTALLATION OF OPERABLE LOUVERS SHALL NOT BE PROHIBITED.
* WALL VENTED CRAWL SPACES REQUIRE FULL COVERAGE GROUND VAPOR RETARDERS. A MIN. OF 6-MIL POLYETHYLENE VAPOR RETARDER OR EQUIV. SHALL BE INSTALLED TO COVER ALL EXPOSED EARTH IN CRAWL SPACE. OVER-LAP JOINTS NO LESS THAN 12".
* FOUNDATION VENTS TO BE WITHIN 3' OF CORNERS

APPROVED BY
NTA INC.
7/31/2018
Approval of this document does not authorize or approve any deviation or deviations from the requirements of applicable State Laws.
David Richter

PIER LEGEND

- PIER MATING LINE COLUMN
- PIER MATING LINE NON–COLUMN
- PIER PORCH / RECESSED ENTRY
- PIER MAIN BEAM

FOUNDATION DESIGN SPECIFICATIONS:
SEISMIC DESIGN CATEGORY = C
20 PSF GROUND SNOW LOAD
MATELINE GIRDER BEAM:
(4) 2x10 #2 SP WITH JOINTS CONNECTED WITH M18 4x5 METAL CONNECTOR PLATES.
SEE FOUNDATION PACKAGE FOR ADDITIONAL INFORMATION.

CRAWL SPACE VENTILATION:
(PER 2012 (NC/VA) OR 2015 SC RESIDENTIAL CODE)
NO LESS THAN 1 SQ. FT. VENTILATION REQUIRED PER 150 SQ. FT OF CRAWL SPACE

CRAWL SPACE VENTILATION CALCS:		
BOX LENGTH	UNIT WIDTH	SQUARE FEET
64	30	1920
12.80	=SQ.FT. NET FREE AREA REQUIRED.	
ONE 8 x 16 VENT EQUALS 0.050 SQ.FT. OF VENTILATION.		
25.60	VENTS REQUIRED=	26

SN: 51373

Cavalier Home Builders
NASHVILLE DIVISION
1001 BUSINESS 64 HWY.
NASHVILLE, NC 27856
PH. 1-252-459-7026
FAX. 1-252-459-4315

REVISIONS:	PRINT DATE: 7/25/18	APPROVED BY:	NORTH CAROLINA	TITLE: OFF-FRAME FOUNDATION	MODEL NO: 7609A6401-NC
DESIGNED FOR: 100 MPH - OFF FRAME	SCALE: N.T.S.	DRAWN BY: R.C.		HOUSE SIZE: 64 x 32 - 3 BDRM - 2 BATH	DRAWING NO: 4 of 9

TYPICAL FASTENING SCHEDULE:

FLOOR FASTENING	REFERENCE 'CFL' – FLOOR CONSTRUCTION CALCULATIONS OF THE MANUAL.
RIM JOIST TO JOIST	PER FL–110 OR FL–510.0 IN APPROVED MANUAL
FLOOR BLOCKING TO JOIST	PER FL–100.0 IN APPROVED MANUAL
MULTIPLE JOIST	.131 x 3" NAILS @ 10" O.C., W/ GLUE 80%
DECKING TO FLOOR FRAMING	PER FL–10 IN APPROVED MANUAL
EXTERIOR WALL FASTENING	REFERENCE 'CEW' – EXTERIOR WALL CONSTRUCTION CALCULATIONS OF THE MANUAL
LOWER TOP PLATE & BOTTOM PLATE TO STUD	PER EW–25 IN APPROVED MANUAL DOUBLE STUDS 7/16" x 2–1/2" x 15 GA. STAPLES @ 6" O.C.
DOUBLE TOP PLATES	PER EW–1 IN APPROVED MANUAL
HEADER TO STUDS	PER EW–20 CHARTS IN APPROVED MANUAL
HEADER COMPONENTS	PER EW–20 IN APPROVED MANUAL
STUDS TO SILLS	PER EW–20 IN APPROVED MANUAL
EXTERIOR SIDING	PER THE MANUFACTURER'S SPECIFICATIONS
BOTTOM PLATE TO FLOOR	PER EW–31 IN APPROVED MANUAL
SIDEWALL TO ENDWALL	PER EW–30 FOR NON–SHEARWALL OR PER SW–40 FOR SHEARWALL OR PER EW–0.0 IN APPROVED MANUAL
WALL WALL TO WALL TOP PLATES	3" x 6" x .036" (20 GA.) GALVANIZED STEEL PLATE W/ (6) .131 x 3" NAILS AT EACH SIDE AT EACH
EXTERIOR WALL SHEATHING	FOR APA RATED SHEATHING; 7/16" X 1–3/4" x 15 GA. STAPLES AT 6" O.C. AT ALL EDGES & 12" O.C. FIELD. FOR COMPOSITE WALLS, FASTEN PER EW–40. FOR SHEARWALL FASTEN PER SW–40 OR ATTACHED PAGES (IF ATTACHED). ALL OTHER SHEATHING FASTENED PER MANUFACTURER'S INSTALLATION INSTRUCTIONS.
MATING WALL FASTENING	REFERENCE 'CMW' – MARRIAGE WALL CALCULATIONS OF THE MANUAL
LOWER TOP PLATE TO STUD	PER MW–40 IN APPROVED MANUAL
BOTTOM PLATE TO STUD	PER MW–40 IN APPROVED MANUAL
MULTIPLE STUDS	7/16" x 2–1/2" x 15 GA. STAPLES OR .131 x 3" NAILS @ 16" O.C. TO EACH MEMBER
STANDARD COLUMN	PER MW–20 IN APPROVED MANUAL
DOUBLE TOP PLATES	PER MW–40 IN APPROVED MANUAL
BOTTOM PLATE TO FLOOR	PER MW–31 IN APPROVED MANUAL
MATING WALL TO ENDWALL	PER EW–30 IN APPROVED MANUAL
WALL TO WALL TOP PLATES	3" x 6" x .036" (20 GA.) GALVANIZED STEEL PLATE W/ (6) .131 x 3" NAILS AT EACH SIDE AT EACH WALL OR OVERLAPPED PLATE PER EW–0.
INTERIOR WALL FASTENING	
BOTTOM PLATE TO STUDS	PER PT–40 IN APPROVED MANUAL
TOP PLATE TO STUD	PER PT–40 IN APPROVED MANUAL
DOUBLE STUDS	7/16" x 2–1/2" x 16 GA. STAPLES @ 16" O.C.
FLAT HEADER TO STUDS	PER PT–20 IN APPROVED MANUAL
WALL TO FLOOR	PER PT–40 IN APPROVED MANUAL
WALL TO WALL	PER PT–30 IN APPROVED MANUAL
TOP PLATE TO ROOF SYSTEM	PER PT–40 IN APPROVED MANUAL
GYPSUM TO WALL FRAMING	PER THE RESIDENTIAL BUILDING CODE TABLES
ROOF FASTENING	REFERENCE 'CRC' – ROOF CONSTRUCTION CALCULATIONS OF THE MANUAL
CEILING BOARD TO TRUSS	FOAM–SEAL 2100 SPRAY ADHESIVE PER THE MANUFACTURER'S SPECIFICATIONS
BLOCKING TO TRUSS	(2) 7/16" x 2–1/2" x 15 GA. STAPLES DIRECT
TRUSS TO SIDEWALL TOP PLATE	PER RC–30 IN APPROVED MANUAL
TRUSS TO RIDGE BEAM	PER RC–65 IN APPROVED MANUAL
TRUSS TO EDGE RAIL	PER MW–31 CHARTS IN APPROVED MANUAL
EDGE RAIL TO MATING WALL	PER MW–31 CHARTS IN APPROVED MANUAL
TRUSS TO ENDWALL TOP PLATE ROOF DECKING TO TRUSS	PER SW–40 IN APPROVED MANUAL FOR SHEARWALLS AND RC–33.0 FOR NON–SHEARWALLS PER SW20.0 THRU SW–389E.2 (IF NOT ATTACHED) IN APPROVED MANUAL
SHINGLE TO ROOF DECKING	PER THE MANUFACTURER'S OR ARMA SPECIFICATIONS
OUTLOOKER TO TRUSS	PER RC–70 IN APPROVED MANUAL
INSTALLATION FASTENING	REFERENCE INSTALLATION PAGES PROVIDED IN EACH APPROVAL.

APPROVED BY
NTA INC.
7/31/2018
Approval of this document does not authorize or approve any deviation or deviations from the requirements of applicable State Laws.
David Richter

(CS1) 7/16" APA RATED ROOF DECKING 24/16 SPAN RATING.

(CS2) 15# MIN. ROOF UNDERLAYMENT; SINGLE LAYER w/ GREATER THAN 4:12 ROOF PITCH; DOUBLE LAYER w/ 4:12 OR LESS

(CS3) MIN. 20 YEAR SHINGLES.

(CS4) 1 1/2" WIDE ENGINEERED WOOD BEAM, EACH HALF IN OPEN SPAN AREAS GREATER THAN 48".

(CS5) ENGINEERED WOOD TRUSSES: COMPONENTS & SPACING PER TRUSS PRINT

* FOR CONNECTION AND SET–UP OF ROOF: SEE MODULAR SET–UP PAGES ATTACHED TO APPROVAL

(CS6) CEILING INSULATION (BLOWN OR BATT) (R–VALUE PER VIRGINIA PRESCRIPTIVE REQUIREMENTS)

(CS7) CONTINUOUS VENTED SOFFIT.

(CS8) DOUBLE 2x4 TOP PLATE (MIN.).

(CS9) 2x4 STUDS @ 16" O.C. STUD GRADE SPF (MIN.).

(CS10) WALL INSULATION (BATT) (R–VALUE PER VIRGINIA PRESCRIPTIVE REQUIREMENTS)

(CS11) 3/8" OSB SHEATHING WITH WATER RESISTIVE BARRIER BELOW ALL EXT. FINISH MATERIAL. CORROSION–RESISTANT FLASHING REQUIRED AT ALL LOCATIONS AS SHOWN ON APPROVED MANUAL DETAILS

(CS12) SINGLE 2x4 BOTTOM PLATE SPF #3 (MIN.).

(CS13) 3/8" (MIN.) GYPSUM WALL BOARD.

(CS14) FLOOR INSULATION (BATT, OR BLANKET) (R–VALUE PER VIRGINIA PRESCRIPTIVE REQUIREMENTS)

(CS15) MIN. 19/32" RATED DECKING 16" O.C. OR 32/16 SPAN RATING.

(CS16) MAIN HEAT DUCT. (MAY BE SITE INSTALLED BY OTHERS)

(CS17) OFF FRAME PER FL–110.0

(CS18) OFF FRAME PER FL–110.0

(CS19) 2x4 (MIN.) MARRIAGE WALL STUDS @ 16" O.C.

(CS20) LISTED BOTTOM BOARD, WHERE OCCURS.

(CS21) 1/2" SHIM FOR COMPRESSION STRIP.

(CS22) DOUBLE 2x4 (MIN.) TOP PLATE.

(CS23) 2x4 (MIN.) BOTTOM PLATE.

(CS24) 1/2" (MIN.) GYPSUM BOARD CEILING.

(CS25) WEDGE SUPPORT AT CATHEDRAL CEILING, EACH END OF TRUSS.

(CS27) CONTINUOUS 2x3 SPF #3 MINIMUM FOR TRUSS TOP RAIL FOR RIDGE CONNECTION

(CS28) 2x FULL DEPTH BLOCKING 24" O.C. (2) JOIST BAY MIN. ENDWALL LOCATION ONLY.

(CS29) LAP BOARD, WOOD OR VINYL SIDING, HARDI SIDING, OR EXPOSED SHEATHING FOR ON SITE EXTERIOR FINISH INSTALLATION.

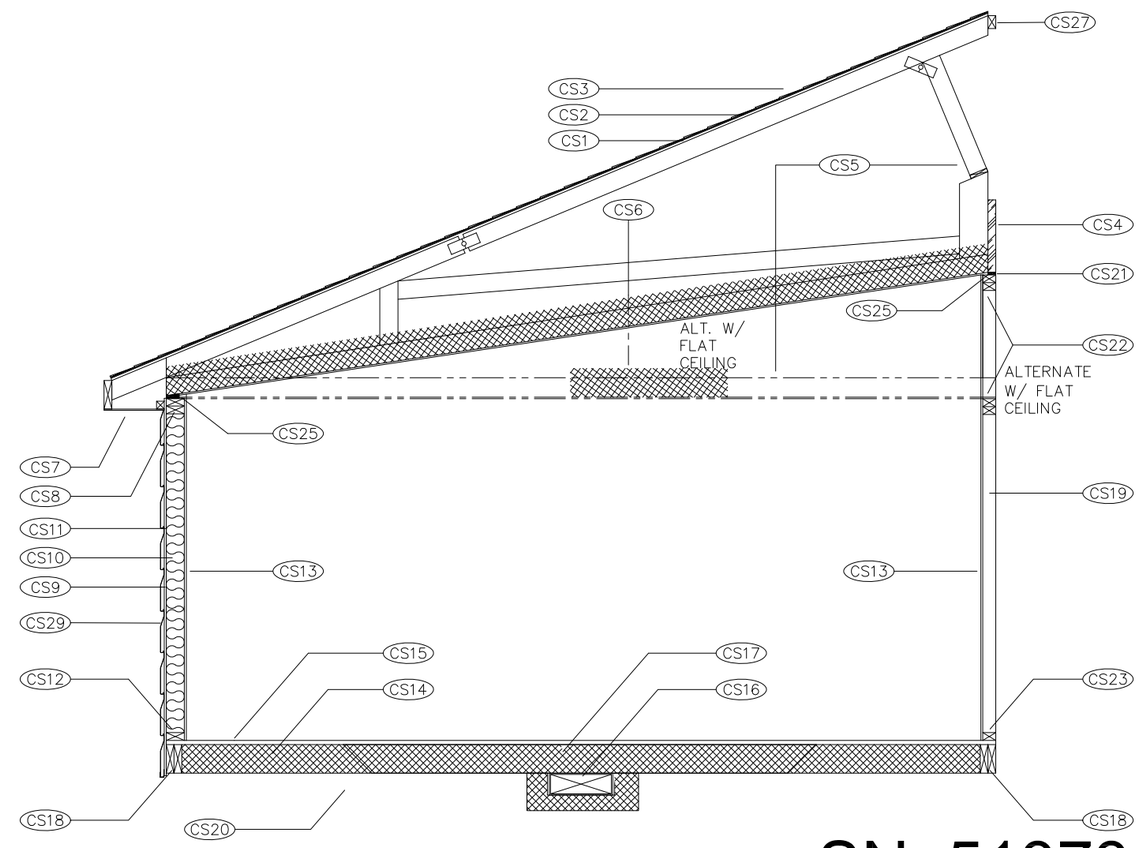

SN: 51373

REVISIONS:	PRINT DATE: 7/25/18	APPROVED BY:	NORTH CAROLINA	TITLE: CROSS-SECTION DETAILS	MODEL NO: 7609A6401-NC
DESIGNED FOR: 100 MPH - OFF FRAME	SCALE: N.T.S.	DRAWN BY: R.C.		HOUSE SIZE: 64 x 32 - 3 BDRM - 2 BATH	DRAWING NO: 5 of 9

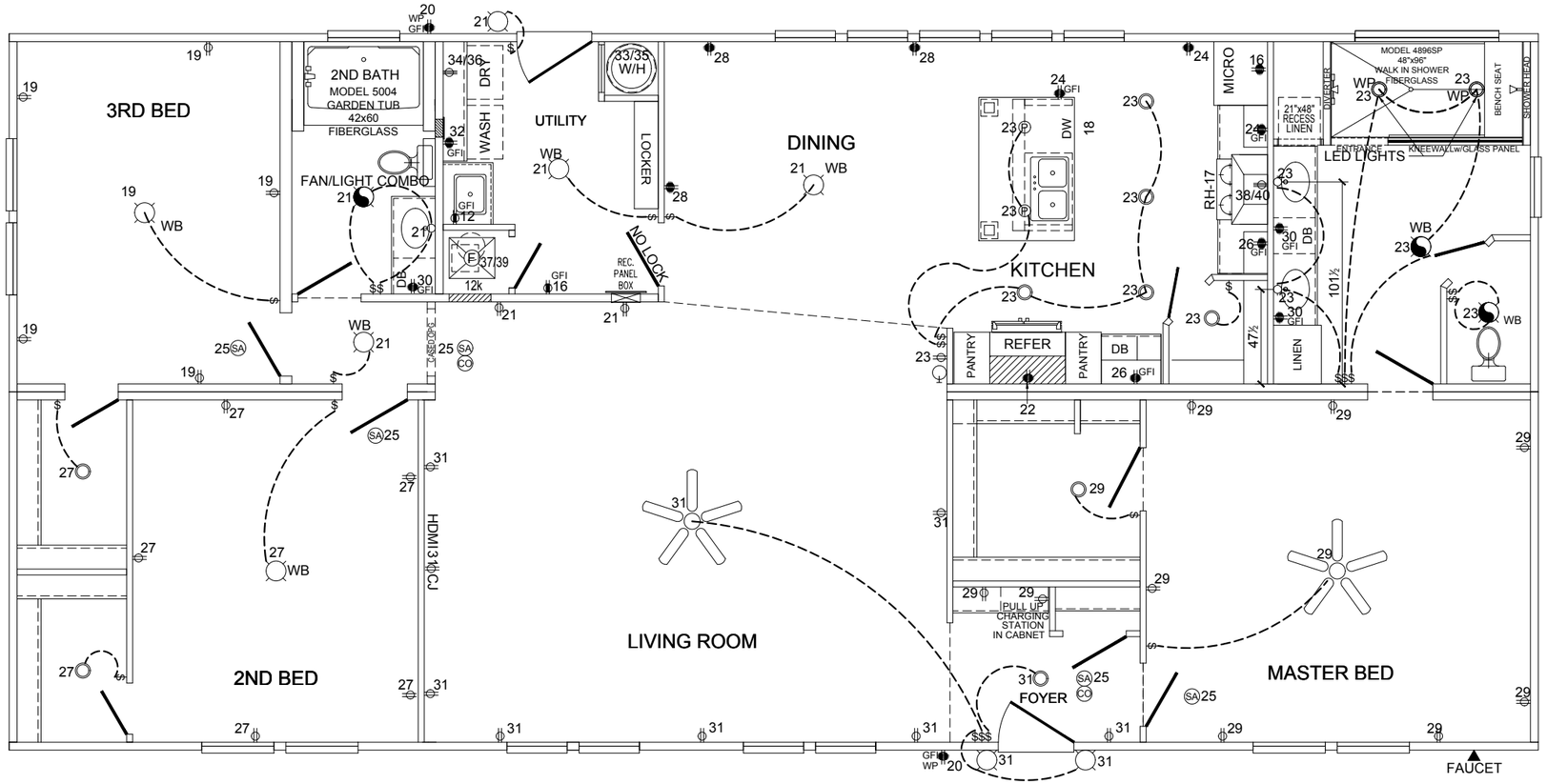

APPROVED BY
NTA INC.
7/31/2018
Approval of this document does not authorize or approve any deviation or deviations from the requirements of applicable State Laws.
David Richter

ELECTRICAL DEVICES SYMBOLS

- = DUPLEX OUTLET ON 15 AMP CIRCUIT
- = DUPLEX OUTLET ON 20 AMP CIRCUIT
- GFI = GFI PROTECTED
- WP = WEATHER PROTECTED
- $ = SWITCH
- $$ = DOUBLE GANG SWITCH
- WP = CEILING MOUNTED LIGHT FIXTURE
- = WALL MOUNTED LIGHT FIXTURE
- = EXHAUST FAN
- SA = SMOKE ALARM W/ BATTERY BACK-UP
- T = THERMOSTAT
- = MAIN DISTRIBUTION PANEL
- = FLUORESCENT LIGHT
- J = JUNCTION BOX
- * = ARC FAULT RECEPT.
- ** = REQUIRES APPLIANCE DISCONNECT

APPLIANCE	MANUFACTURER	MODEL NUMBER
BATH VENT FAN (50 CFM)	BROAN	688
KITCHEN VENT FAN (220 CFM)	BROAN	QS130

	CIRCUIT	AMP	AWG	CIRCUIT	AMP	AWG	
	1			2			
	3			4			
	5			6			
	7			8			
	9			10			
	11			12	20	12-2	UTILITY CABS(GFCI)
	13			14	20	12-2	FREEZER (GFCI)
	15			16	20	12-2	MICROWAVE
(AF)RANGE HOOD	17	15	14-2	18	20	12-2	D/W
(AF)BEDROOM 3	19	15	14-2	20	20	12-2	EXTERIOR GFI RECEPT's (GFCI)
(AF) GENERAL LIGHTING	21	15	14-2	22	20	12-2	REFRIGERATOR
(AF) GENERAL LIGHTING	23	15	14-2	24	20	12-2	SMALL APPLIANCE (GFCI)
(AF)SMOKE/CO DETECTORS	25	15	14-3	26	20	12-2	SMALL APPLIANCE (GFCI)
(AF)BEDROOM 2	27	15	14-2	28	20	12-2	DINING ROOM (AF)
(AF)BEDROOM 1	29	15	14-2	30	20	12-2	BATH GFI RECEPT's (GFCI)
(AF) LIVING ROOM	31	15	14-2	32	20	12-2	WASHER (GFCI)
W/H	33	25	10-2	34	30	10-3	DRYER
	35	25	10-2	36	30	10-3	
12K FURNACE	37	70	4-4-6	38	40	8-3	RANGE
	39			40	40	8-3	

2017 NEC PANEL CHART (NC AMENDMENTS)
BRACE ALL SURFACE MOUNT LIGHT/FAN BOXES

ELECTRICAL CROSSOVER CONNECTION NOTE:

IF MORE THAN (1) WIRE IS USED FOR CROSSOVER, THEY SHALL BE COLOR CODED WITH TAPE, PERMANENT MAKERS, PAINT, ECT. CROSSOVER WIRES TO BE PROTECTED WITH FLEX CONDUIT IF THE WIRE IS EXPOSED BELOW THE FLOOR. IF AMP CONNECTORS OR EQUIVALENT ARE USED, THE FLEX CONDUIT MAY BE OMITTED IF A BOTTOM BOARD PATCH, BOX, COVER, ECT. IS USED TO COVER THE WIRES TO PROTECT THEM FROM THE ELEMENTS.

SN: 51373

P.E. STAMP

Cavalier Home Builders
NASHVILLE DIVISION
1001 BUSINESS 64 HWY.
NASHVILLE, NC 27856
PH. 1-252-459-7026
FAX. 1-252-459-4315

REVISIONS:	PRINT DATE: 7/25/18	APPROVED BY:	NORTH CAROLINA	TITLE: ELECTRICAL	MODEL NO: 7609A6401-NC
DESIGNED FOR: 100 MPH - OFF FRAME	SCALE: N.T.S.	DRAWN BY: R.C.		HOUSE SIZE: 64 x 32 - 3 BDRM - 2 BATH	DRAWING NO: 6 of 9

NOTES:

1) FITTING SIZES CORRESPOND TO ADJACENT PIPE SIZES.

2) DARK (THICK) LINES REPRESENT 2" PIPE; ALL OTHER TO BE 1 1/2" PIPE UNLESS OTHERWISE NOTED.

3) P-TRAP DIRECTIONS MAY VARY.

4) DOTTED LINES REPRESENT SITE INSTALLED PLUMBING.

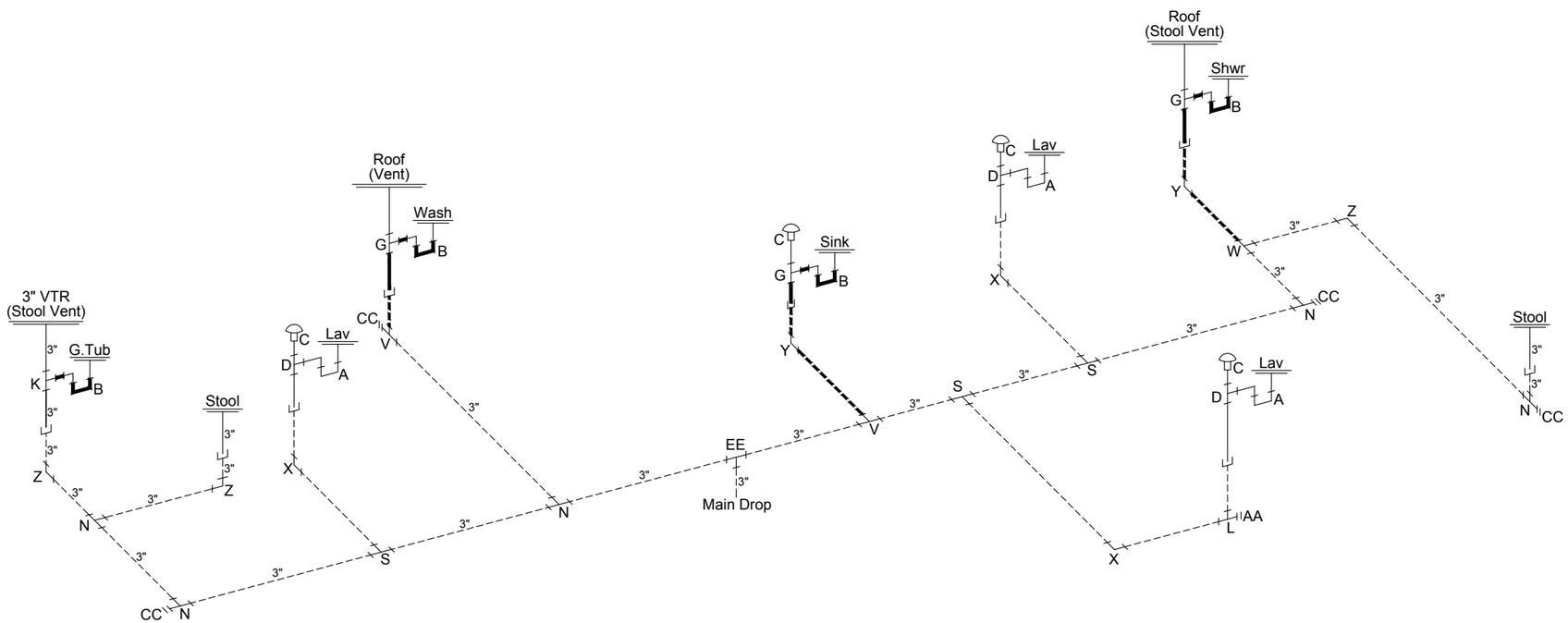

	DESCRIPTION	PART NUMBER
A	1 1/2" "P" TRAP	02215
B	2" "P" TRAP	02216
C	AUTO VENT	PVA1S0
D	1 1/2" SANITARY TEE	02752
E	2" SANITARY TEE	02753
F	3" SANITARY TEE	02852
G	2" x 1 1/2" x 2" SANITARY TEE	2" SANITARY TEE ----02753 2" x1 1/2" BUSHING ----02906
H	2"x1 1/2"x1 1/2" SANITARY TEE	02761
J	3"x2"x3" SANITARY TEE	
K	3"x3"x2" SANITARY TEE	02763
L	1 1/2" LONG TURN TEE WYE	02853
M	2" LONG TURN TEE WYE	02858
N	3" LONG TURN TEE WYE	02852
P	2"x1 1/2"x 1 1/2" LONG TURN TEE WYE	2" LONG TURN TEE WYE 02858 2"x1-1/2" BUSHING 02906
R	2"x2"x1-1/2" LONG TURN TEE WYE	02858 2"x1 1/2" BUSHING-----02906
S	3"x3"x1 1/2" LONG TURN TEE WYE	3" LONG TURN TEE WYE-----02852 3"x2" BUSHING-----02908 2" x1 1/2" BUSHING ----02906
T	3" x 1 1/2" x 3" LONG TURN TEE WYE	
V	3"x3"x2" LONG TURN TEE WYE	3" LONG TURN TEE WYE 02852 3" x 2" BUSHING 02908
W	3"x2"x3"LONG TURN TEE WYE	3"x2"x3"LONG TURN TEE WYE----02998 3"x2" BUSHING-----02908
X	1 1/2" LONG TURN ELL	02871
Y	2" LONG TURN ELL	
Z	3" LONG TURN ELL	
AA	1 1/2" CLEAN OUT	1 1/2" CLEAN OUT ADAPTER-----02922 1 1/2" CLEAN OUT PLUG-----02938
BB	2" CLEAN OUT	2" CLEAN OUT ADAPTER-----02923 2" CLEAN OUT PLUG-----02939
CC	3" CLEAN OUT	3" CLEAN OUT ADAPTER-----02924 3" CLEAN OUT PLUG-----02941
DD	3" 45° ELL	
EE	3" THREE-WAY ELL	
MM	1 1/2" 45° ST. ELL	
PP	3" COUPLING	02935
QQ	3"x2"x1-1/2" LONG TURN TEE WYE	3" LONG TURN TEE WYE-----02852 (2) 3"x2" BUSHINGS-----02908 2" x1 1/2" BUSHING ----02906

ALL DWV MATERIAL TO BE PVC

APPROVED BY
NTA INC.
7/31/2018
Approval of this document does not authorize or approve any deviation or deviations from the requirements of applicable State Laws.
David Richter

SN: 51373

DRAIN WASTE & VENT SYSTEM NOTE:

THE DRAIN SYSTEM OUTLETS ARE LOCATED UNDER THE HOME AND EACH DROP IS CAPPED OFF TO PREVENT TRASH AND RODENT TO GET INTO THE SYSTEM. MAKE SURE YOU HAVE ALL THE PIPE AND FITTINGS YOU NEED BEFORE BEGINNING ASSEMBLY. A DESIGN SHOWING THE PLUMBING LAYOUT IS INCLUDED WITH EACH OWNERS PACKAGE, PLEASE REFER TO THIS DRAWING TO ENSURE VENTING OF THE DRAIN SYSTEM IS CORRECT.

ACCESS SHALL BE PROVIDED TO ALL AIR ADMITTANCE VALVES. THE VALVE SHALL BE LOCATED WITHIN A VENTILATED SPACE THAT ALLOWS AIR TO ENTER THE VALVE. WITHIN EACH PLUMBING SYSTEM, A MINIMUM OF ONE STACK VENT OR A VENT STACK SHALL EXTEND OUTDOORS TO THE OPEN AIR.

P.E. STAMP

Cavalier Home Builders
NASHVILLE DIVISION
1001 BUSINESS 64 HWY.
NASHVILLE, NC 27856
PH. 1-252-459-7026
FAX. 1-252-459-4315

REVISIONS:	PRINT DATE: 7/25/18	APPROVED BY:	NORTH CAROLINA	TITLE: DWV SYSTEM	MODEL NO: 7609A6401-NC
DESIGNED FOR: 100 MPH - OFF FRAME	SCALE: N.T.S.	DRAWN BY: R.C.		HOUSE SIZE: 64 x 32 - 3 BDRM - 2 BATH	DRAWING NO: 7 of 9

INSTALLED PLUMBING FIXTURES:

FIXTURE	MANUFACTURER	MODEL NUMBER
BATH FAUCET	DELTA	SBS83510
KITCHEN FAUCET	DELTA	172-W-S
TUB FAUCET	DELTA	SBS-87720
SHOWER FAUCET	DELTA	R1300-WPTP
OUTSIDE FAUCET		FROST PROOF
TOILETS	BRIGGS	
BATH SINK	OXFORD	
KITCHEN SINK	WHITE ROCK	

APPROVED BY
NTA INC.
7/31/2018
Approval of this document does not authorize or approve any deviation or deviations from the requirements of applicable State Laws.
David Richter

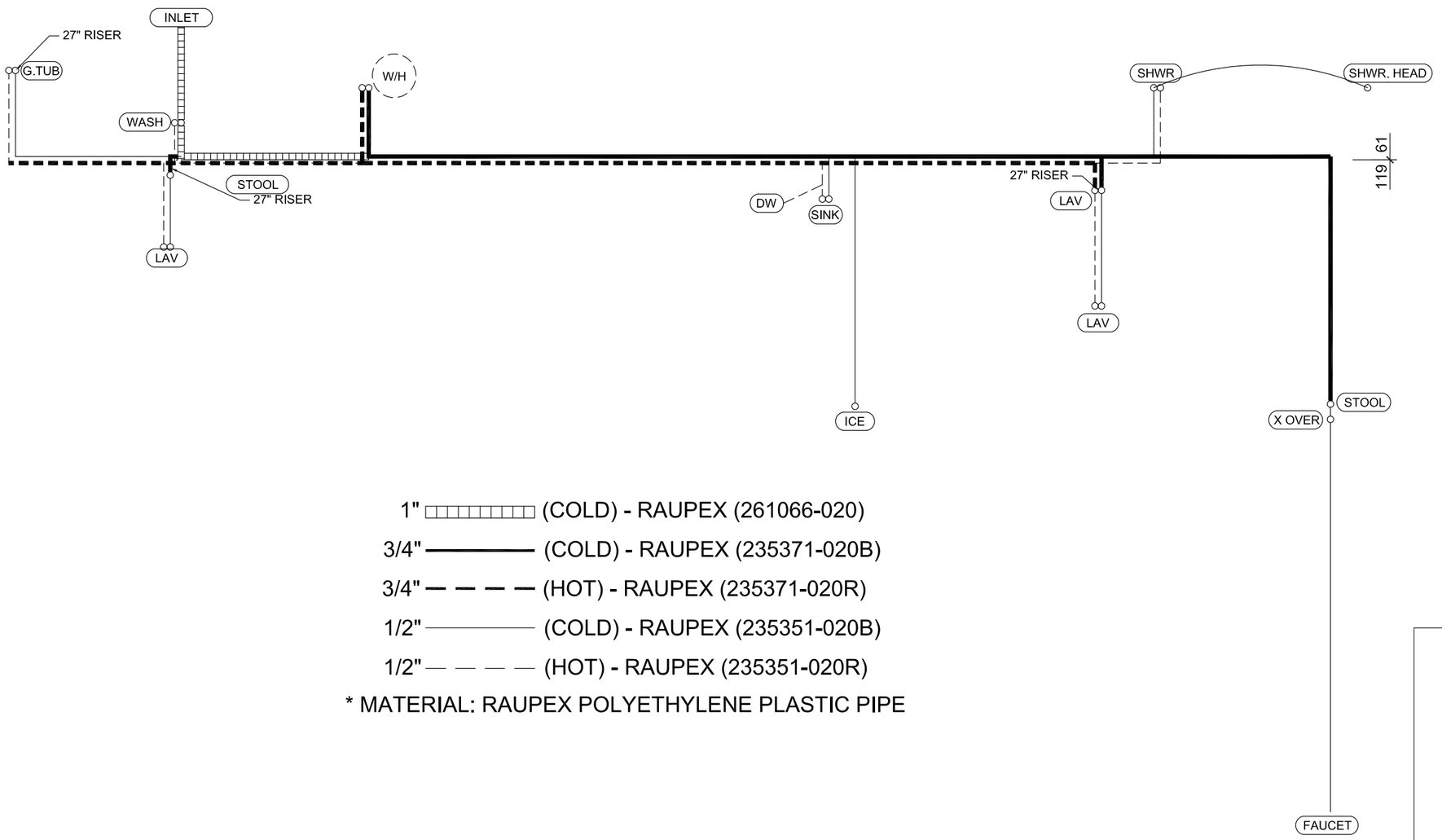

1" (COLD) - RAUPEX (261066-020)
3/4" (COLD) - RAUPEX (235371-020B)
3/4" (HOT) - RAUPEX (235371-020R)
1/2" (COLD) - RAUPEX (235351-020B)
1/2" (HOT) - RAUPEX (235351-020R)
* MATERIAL: RAUPEX POLYETHYLENE PLASTIC PIPE

SN: 51373

P.E. STAMP

Cavalier Home Builders
NASHVILLE DIVISION
1001 BUSINESS 64 HWY.
NASHVILLE, NC 27856
PH. 1-252-459-7026
FAX. 1-252-459-4315

REVISIONS:	PRINT DATE: 7/25/18	APPROVED BY:	NORTH CAROLINA	TITLE: WATER SUPPLY	MODEL NO: 7609A6401-NC
DESIGNED FOR: 100 MPH - OFF FRAME	SCALE: N.T.S.	DRAWN BY: R.C.		HOUSE SIZE: 64 x 32 - 3 BDRM - 2 BATH	DRAWING NO: 8 of 9

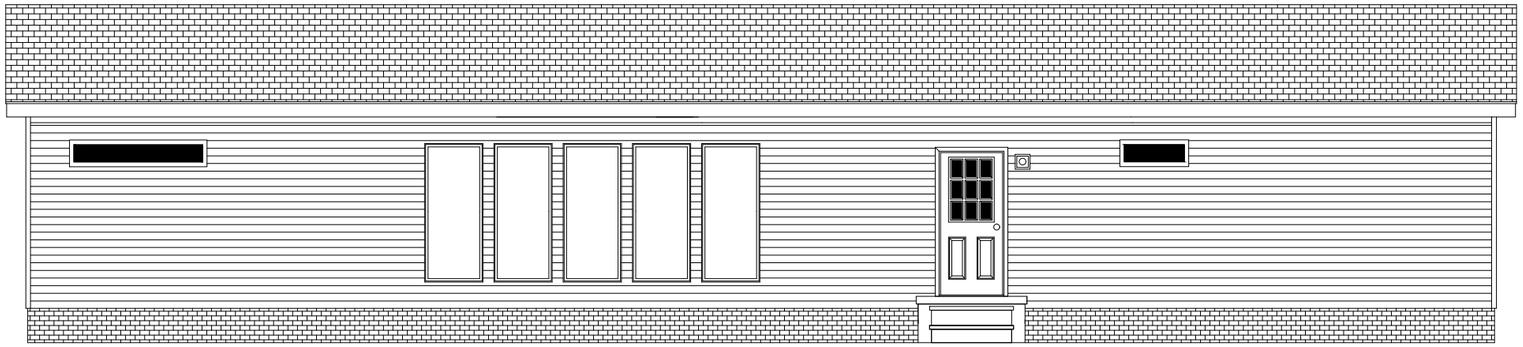

REAR ELEVATION

ATTIC VENT CALCULATIONS					
CEILING INLET					
BOX LENG BOX WIDTH					
64	30	x144	=	276480	SQ.IN.
REQUIRED INLET AREA:					
.5 x	276480	/ 300	=	460.8	SQ.IN.
PROVIDED INLET AREA					
64 x2		x6.185	=	791.68	SQ.IN.
791.68 SQ.IN.		>	460.8	SQ. IN.	THEREFORE OK
REQUIRED OUTLET AREA					
.5x	276480	/300	=	460.8	SQ.IN.
460.8	/72	=	6.4 =		7
PROVIDED OUTLET AREA					VENTS REQUIRED
18 Sq. In. / LIN. FT. OF RIDGE VENT (72 Sq. In. / 4' PC OF RIDGE VENT)					
7 x72 SQ.IN.		504 SQ.IN.			
504 SQ.IN.		>	460.8	SQ.IN.	THEREFORE OK.

Soffit materials for this unit assume that the building face will be 10 feet or greater from the property line when installed on site. Where the building face is less than 10 feet from the property line, underlayment materials and ventilation in accordance with Section R703.11.3, NC Residential Code, must be provided and installed at the site and inspected by the local jurisdiction.

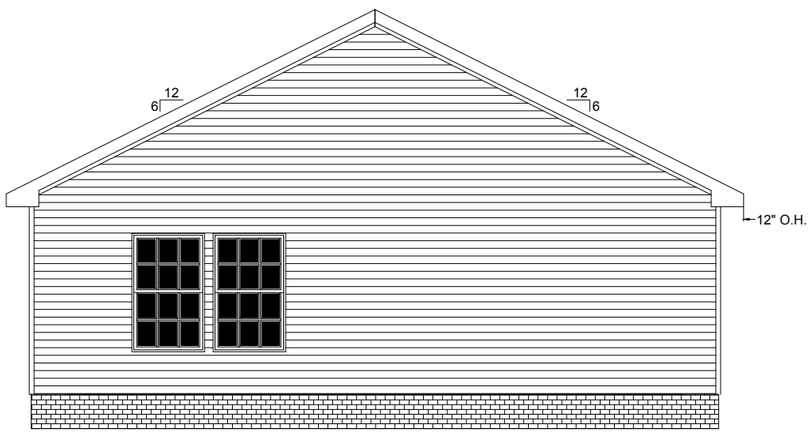

LEFT ELEVATION

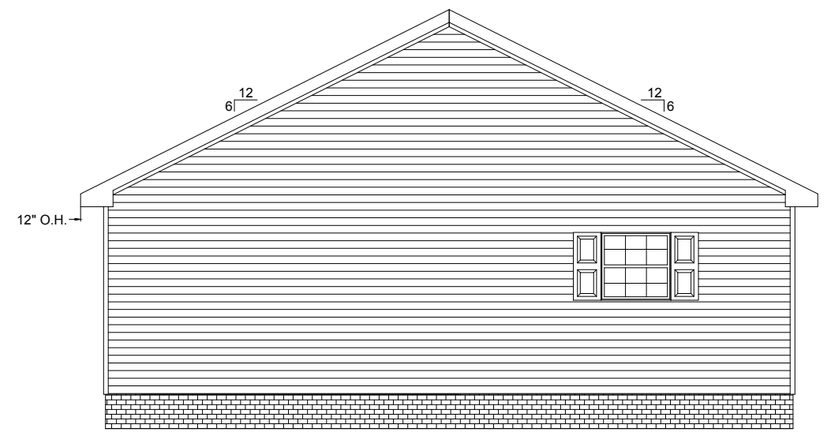

RIGHT ELEVATION

EXTERIOR MATERIALS:

1. EXTERIOR WALL FINISH: VINYL SIDING (STYLECREST)
2. SOFFIT FINISH: METAL SOFFIT (ELIXIR)
3. ROOF COVERING: 30 YR. OWENS CORNING ART. SHINGLES

APPROVED BY
NTA INC.
7/31/2018
Approval of this document does not authorize or approve any deviation or deviations from the requirements of applicable State Laws.
David Richter

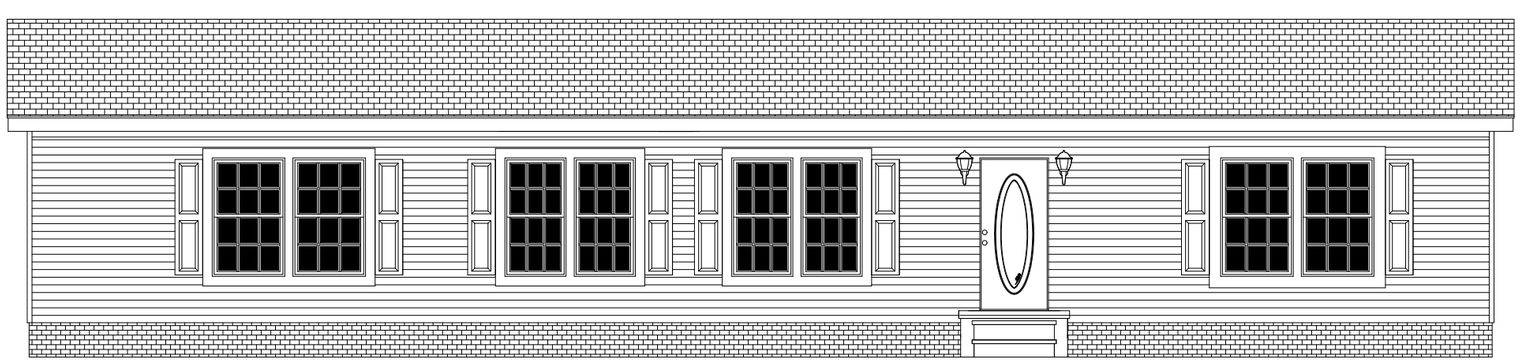

FRONT ELEVATION

SN: 51373

P.E. STAMP

Cavalier Home Builders
NASHVILLE DIVISION
1001 BUSINESS 64 HWY.
NASHVILLE, NC 27856
PH. 1-252-459-7026
FAX. 1-252-459-4315

REVISIONS:	PRINT DATE: 7/25/18	APPROVED BY:	NORTH CAROLINA	TITLE: EXTERIOR ELEVATIONS	MODEL NO: 7609A6401-NC
DESIGNED FOR: 100 MPH - OFF FRAME	SCALE: N.T.S.	DRAWN BY: R.C.		HOUSE SIZE: 64 x 32 - 3 BDRM - 2 BATH	DRAWING NO: 9 of 9

ELECTRICAL LOAD CALCULATIONS

7609A6401 (SN: 51373)

COMPUTE GENERAL PURPOSE LOAD			64' DOUBLE WIDE)							
MAIN UNIT ---------->	30	FT.	64	FT. X	0.003	WATTS/SQ.FT. =		5.76	KVA	
TAG UNIT ---------->	0	FT.	0	FT. X	0.003	WATTS/SQ.FT. =		0.00	KVA	
(TOTAL) ------>	5.76	KVA /	120	VOLTS =	48	AMPS		----------		
	48	AMPS /	15	AMPS =	3.20	CIRCUITS		5.76	KVA	(TOTAL)
MINIMUM NUMBER OF CIRCUITS REQUIRED:										
	4	GENERAL PURPOSE @ 15 AMPS								
	3	SMALL APPLIANCE @ 20 AMPS								
	1	LAUNDRY @ 20 AMPS								
COMPUTE MINIMUM FEEDER:										
	GENERAL LIGHTING ----------				5.76	KVA				
	SMALL APPLIANCE ----------				4.5	KVA				
	LAUNDRY ----------				1.5	KVA				
	RANGE ----------				12	KVA				
	WATER HEATER ----------				4.5	KVA				
	DRYER ----------				5	KVA				
	FURNACE (GAS OR OIL) ----------				1	KVA				
	VENT FANS (4 TL) ----------				1.1	KVA				
	MICROWAVE OVEN ---------		YES	----------	1.5	KVA				
	DISHWASHER ----------				1.2	KVA				
	GARBAGE DISPOSAL ---------		NO	----------	0	KVA				
	TOTAL ----------				38.06	KVA				
	10	KVA	@	100 % =	10	KVA				
	38.06	KVA	-	10	KVA =	28.06	KVA	@ 40% =		11.22 KVA
	10	KVA	+	11.22	KVA =	21.22	KVA	/ 240 VOLTS =		88.43 AMPS
MINIMUM ENTRANCE TO BE			100	AMPERE SERVICE						
COMPUTE NEUTRAL LOAD										
GENERAL LIGHT + SMALL APPLIANCE =					11.76	KVA				
		FIRST	3	KVA @ 100%	3	KVA				
	11.76	KVA -	3	KVA =	8.76	KVA X		35% =		3.07 KVA
NET TOTAL		3	KVA +	3.07	KVA =	6.066	KVA			
	RANGE ----------		8 KVA @ 70% ----------		5.6	KVA				
	DRYER ----------		5 KVA @ 70% ----------		3.5	KVA				
	DISHWASHER ----------				1.2	KVA				
	FURNACE ----------				1	KVA				
	MICROWAVE OVEN ----------				1.5	KVA				
	FANS ----------				1.1	KVA				
	GARBAGE DISPOSAL ----------				0	KVA				
TOTAL		19.97	KVA /	240 VOLTS =	83.19	KVA				
ADD OPT. AIR CONDITIONER 3.25 KVA (2-1/2 TON UNIT)										
	21.22	KVA +	3.25	KVA =	24.47	KVA /		240 VOLTS =		102.0 AMPS
MINIMUM ENTRANCE TO BE			200	AMPERE SERVICE						
OPT. CENTRAL ELECTRIC SPACE HEATING IN PLACE OF GAS/OIL										
(AIR CONDITIONER LOAD LESS THAN SPACE HEATING)										
	12	KVA ELECTRIC FURNACE @			65% =		7.8	KVA		
	20.82	KVA +		7.8	KVA =	28.62	KVA /	240	VOLTS	119.3 AMPS
MINIMUM ENTRANCE TO BE			200	AMPERE SERVICE						

APPROVED BY
NTA INC.
7/31/2018
Approval of this document does not authorize or approve any deviation or deviations from the requirements of applicable State Laws.
David Richter

RES*check* Software Version 4.6.2.1

Compliance Certificate

Project Title: 7609A6401 (51373)

Energy Code:	**North Carolina Energy Conservation Code**
Location:	**Harnett County, North Carolina**
Construction Type:	**Single Family**
Project Type:	**New construction**
Glazing Area Percentage:	**18%**
Heating Degree Days:	**3499**
Climate Zone:	**4**

Construction Site: Owner/Agent: Designer/Contractor:

Compliance: **Passes using UA trade-off**

Compliance: **1.8% Better Than Code** Maximum UA: **337** Your UA: **331** Maximum SHGC: **0.30** Your SHGC: **0.28**

The % Better or Worse Than Code index reflects how close to compliance the house is based on code trade-off rules.
It DOES NOT provide an estimate of energy use or cost relative to a minimum-code home.

Assembly	Gross Area or Perimeter	Cavity R-Value	Cont. R-Value	Glazing or Door U-Factor	UA
Ceiling 1: Flat Ceiling or Scissor Truss	1920	33.0	0.0		63
Wall 1: Wood Frame, 16" o.c.	1504	15.0	0.0		95
Window: 3608: Vinyl/Fiberglass Frame, Double Pane with Low-E SHGC: 0.28	2			0.340	1
Window: 3036: Vinyl/Fiberglass Frame, Double Pane with Low-E SHGC: 0.28	8			0.340	3
Window: 3060: Vinyl/Fiberglass Frame, Double Pane with Low-E SHGC: 0.28	50			0.340	17
Window: 3072: Vinyl/Fiberglass Frame, Double Pane with Low-E SHGC: 0.28	75			0.340	26
Window: 3660: Vinyl/Fiberglass Frame, Double Pane with Low-E SHGC: 0.28	90			0.340	31
Window: 7208: Vinyl/Fiberglass Frame, Double Pane with Low-E SHGC: 0.28	4			0.340	1
Door: 3882G: Glass SHGC: 0.28	41			0.320	13
Floor 1: All-Wood Joist/Truss:Over Unconditioned Space	1920	22.0	0.0		81

Compliance Statement: The proposed building design described here is consistent with the building plans, specifications, and other calculations submitted with the permit application. The proposed building has been designed to meet the North Carolina Energy Conservation Code requirements in RES*check* Version 4.6.2.1 and to comply with the mandatory requirements listed in the RES*check* Inspection Checklist.

Randall Cravener - Engineer Manager	Randall Cravener	7-25-18
Name - Title	Signature	Date

APPROVED BY
NTA INC.
7/31/2018
Approval of this document does not authorize or approve any deviation or deviations from the requirements of applicable State Laws.
David Richter

RES*check* Software Version 4.6.2.1

Inspection Checklist

Energy Code:	**North Carolina Energy Conservation Code**
Location:	**Harnett County, North Carolina**
Construction Type:	**Single Family**
Project Type:	**New construction**
Glazing Area Percentage:	**18%**
Heating Degree Days:	**3499**
Climate Zone:	**4**

Ceilings:

❑ Ceiling 1: Flat Ceiling or Scissor Truss, R-33.0 cavity insulation

Comments: _____

Above-Grade Walls:

❑ Wall 1: Wood Frame, 16" o.c., R-15.0 cavity insulation

Comments: _____

Windows:

❑ Window: 3608: Vinyl/Fiberglass Frame, Double Pane with Low-E, U-factor: 0.340, SHGC: 0.28,
For windows without labeled U-factors, describe features:
#Panes _____ Frame Type _____ Thermal Break? _____ Yes _____ No
Comments:

❑ Window: 3036: Vinyl/Fiberglass Frame, Double Pane with Low-E, U-factor: 0.340, SHGC: 0.28,
For windows without labeled U-factors, describe features:
#Panes _____ Frame Type _____ Thermal Break? _____ Yes _____ No
Comments:

❑ Window: 3060: Vinyl/Fiberglass Frame, Double Pane with Low-E, U-factor: 0.340, SHGC: 0.28,
For windows without labeled U-factors, describe features:
#Panes _____ Frame Type _____ Thermal Break? _____ Yes _____ No
Comments:

❑ Window: 3072: Vinyl/Fiberglass Frame, Double Pane with Low-E, U-factor: 0.340, SHGC: 0.28,
For windows without labeled U-factors, describe features:
#Panes _____ Frame Type _____ Thermal Break? _____ Yes _____ No
Comments:

❑ Window: 3660: Vinyl/Fiberglass Frame, Double Pane with Low-E, U-factor: 0.340, SHGC: 0.28,
For windows without labeled U-factors, describe features:
#Panes _____ Frame Type _____ Thermal Break? _____ Yes _____ No
Comments:

❑ Window: 7208: Vinyl/Fiberglass Frame, Double Pane with Low-E, U-factor: 0.340, SHGC: 0.28,
For windows without labeled U-factors, describe features:
#Panes _____ Frame Type _____ Thermal Break? _____ Yes _____ No
Comments:

Doors:

❑ Door: 3882G: Glass, U-factor: 0.320, SHGC: 0.28,
Comments:

Floors:

❑ Floor 1: All-Wood Joist/Truss:Over Unconditioned Space, R-22.0 cavity insulation

APPROVED BY
NTA INC.
7/31/2018
Approval of this document does not authorize or approve any deviation or deviations from the requirements of applicable State Laws.
David Richter

Comments: _____

Floor insulation is installed to maintain permanent continuous contact with the underside of the subfloor decking, and insulation ends are blocked. Insulation supports that are noncontinuous (i.e., tension support wires) are spaced no more than 18 inches apart and are within 6 inches from each end of the insulation.

Solar Heat Gain Coefficient:

- ❑ Solar Heat Gain Coefficient (SHGC) values are determined in accordance with the NFRC test procedure or taken from the default table.

Air Leakage:

- ❑ Joints (including rim joist junctions), attic access openings, penetrations, and all other such openings in the building envelope that are sources of air leakage are sealed with caulk, gasketed, weatherstripped or otherwise sealed with an air barrier material, suitable film or solid material.
- ❑ Air barrier and sealing exists on common walls between dwelling units, on exterior walls behind tubs/showers, and in openings between window/door jambs and framing.
- ❑ Recessed lights in the building thermal envelope are 1) type IC rated and ASTM E283 labeled and 2) sealed with a gasket or caulk between the housing and the interior wall or ceiling covering.
- ❑ Access doors separating conditioned from unconditioned space (e.g., attic, unconditioned basements and crawlspaces) are weather-stripped and insulated (without insulation compression or damage). Where loose fill insulation exists, a wood framed or equivalent baffle is installed to maintain insulation application. Required insulation values are as follows:

  (1) Hinged vertical doors have a minimum of R-5 insulation.

  (2) Hatches/scuttle hole covers have a minimum of R-10 insulation.

  (3) Pull down stairs have a minimum of R-5 rigid insulation.
- ❑ Site-built masonry fireplaces have doors and comply with Section R1006 of the North Carolina Residential Code for combustion air.

Air Sealing and Insulation:

- ❑ Building envelope air tightness and insulation installation complies with one of the following (mark the method that was applied):

  (1) ____ Post rough-in blower door test result of less than or equal to 5 ACH at 50 pascals.

  (2) ____ Post rough-in blower door test result of less than or equal to 0.30 CFM50/square foot of surface area.

  (3) ____ Visual inspection. The following items, along with all other air leakage requirements in this report, are certified by the builder, permit holder or registered design professional as completed.

  (a) Ceiling/attic: Sealants or gaskets provide a continuous air barrier system joining the top plate of framed walls with either the ceiling drywall or the top edge of wall drywall to prevent air leakage. Top plate penetrations are sealed.

  (b) Ceiling/attic: For ceiling finishes that are not air barrier systems such as tongue-and-groove planks, air barrier systems (e.g., taped house wrap) are used above the finish.

  (c) Above Grade Walls: Sill plate is gasketed or sealed to subfloor or slab.

  (d) Windows/doors: Space between window and door jambs and framing are sealed.

  (e) Floors: Air barrier system is installed at any exposed edge of insulation.

APPROVED BY
NTA INC.
7/31/2018
Approval of this document does not authorize or approve any deviation or deviations from the requirements of applicable State Laws.
David Richter

Sunrooms:

- ❑ Sunrooms that are thermally isolated from the building envelope have a maximum fenestration U-factor of 0.40 and the maximum skylight U-factor of 0.75.
- ❑ Sunrooms with cooling systems shall have a maximum fenestration SHGC or 0.40 for all glazing.

Materials Identification and Installation:

- ❑ Materials and equipment are installed in accordance with the manufacturer's installation instructions.
- ❑ Materials and equipment are identified so that compliance can be determined.
- ❑ Manufacturer manuals for all installed heating and cooling equipment and service water heating equipment have been provided.
- ❑ Insulation R-values and glazing U-factors are clearly marked on the building plans or specifications.

Duct Insulation:

- ❑ Supply and return ducts in unconditioned space and outdoors are insulated to R-8. Supply ducts inside semi-conditioned space are insulated to R-4.

Duct Construction and Testing:

- ❑ Building framing cavities are not used as supply ducts.
- ❑ All joints and seams of air ducts, air handlers, filter boxes, and building cavities used as return ducts are sealed. Joints and seams comply with Part V - Mechanical, Section 603.9 of the North Carolina Residential Code.
- ❑ Postconstruction total duct leakage test (including air handler enclosure) has been performed and results are less than or equal to 115.2 cfm (6 cfm per 100 ft2 of conditioned floor area) pressure differential of 0.1 inches w.g. Tests are performed according to North Carolina Energy Conservation Code guidelines (Section 403.2.2).

Temperature Controls:

- ❑ Where the primary heating system is a forced air-furnace, at least one programmable thermostat is installed to control the primary heating system and has set-points initialized at 70 degree F for the heating cycle and 78 degree F for the cooling cycle.
- ❑ Heat pumps having supplementary electric-resistance heat have controls that prevent supplemental heat operation when the compressor can meet the heating load.

Heating and Cooling Equipment Sizing:

- ❑ Heating and cooling equipment shall be sized in accordance with the North Carolina Mechanical Code.
- ❑ For systems serving multiple dwelling units documentation has been submitted demonstrating compliance with 2009 IECC Commercial Building Mechanical and/or Service Water Heating (Sections 503 and 504).

Circulating Service Hot Water Systems:

- ❑ Circulating service hot water pipes are insulated to R-2.
- ❑ Circulating service hot water systems include an automatic or accessible manual switch to turn off the circulating pump when the system is not in use.

Heating and Cooling Piping Insulation:

- ❑ HVAC piping conveying fluids above 105 degrees F or chilled fluids below 55 degrees F are insulated to R-3.

Swimming Pools:

APPROVED BY
NTA INC.
7/31/2018
Approval of this document does not authorize or approve any deviation or deviations from the requirements of applicable State Laws.
David Richter

- ❑ Heated swimming pools have an on/off heater switch.
- ❑ Pool heaters operating on natural gas or LPG have an electronic pilot light.
- ❑ Timer switches on pool heaters and pumps are present.
  Exceptions:
  - Where public health standards require continuous pump operation.
  - Where pumps operate within solar- and/or waste-heat-recovery systems.
- ❑ Heated swimming pools and in-ground permenantly installed spas have a vapor-retardent cover.
  Exceptions:
  - Covers are not required when 70% of the heating energy is from site-recovered energy or solar energy source.

Lighting Requirements:

- ❑ A minimum of 75 percent of the lamps in permanently installed lighting fixtures can be categorized as one of the following:
  (a) Compact fluorescent
  (b) T-8 or smaller diameter linear fluorescent
  (c) 40 lumens per watt for lamp wattage <= 15
  (d) 50 lumens per watt for lamp wattage > 15 and <= 40
  (e) 60 lumens per watt for lamp wattage > 40

Other Requirements:

- ❑ Snow- and ice-melting systems with energy supplied from the service to a building shall include automatic controls capable of shutting off the system when a) the pavement temperature is above 50 degrees F, b) no precipitation is falling, and c) the outdoor temperature is above 40 degrees F (a manual shutoff control is also permitted to satisfy requirement 'c').

Certificate:

- ❑ A permanent certificate is provided on or in the electrical distribution panel listing the predominant insulation R-values; window U-factors; type and efficiency of space-conditioning and water heating equipment. The certificate does not cover or obstruct the visibility of the circuit directory label, service disconnect label or other required labels.

NOTES TO FIELD: (Building Department Use Only)

APPROVED BY

NTA INC.

7/31/2018

Approval of this document does not authorize or approve any deviation or deviations from the requirements of applicable State Laws.

David Richter

North Carolina Energy Efficiency Certificate

Insulation Rating	R-Value
Ceiling / Roof	33.00
Above-Grade Wall	15.00
Below-Grade Wall	0.00
Floor	22.00
Ductwork (unconditioned spaces):	_____

Glass & Door Rating	U-Factor	SHGC
Window	0.34	0.28
Door	0.32	0.28

Heating & Cooling Equipment	Efficiency
Heating System:_____	_____
Cooling System:_____	_____
Water Heater:_____	_____

Building Air Leakage and Duct Test Results	
Air Leakage Compliance Method:	___ Visual Inspection
	___ Air Leakage Test
Building Air Leakage Test Results	_____
Name of Air Leakage Tester	_____
Duct Tightness Test Results	_____
Name of Duct Tester	_____

Name: _____ **Date:** _____

Comments:

APPROVED BY
NTA INC.
7/31/2018
Approval of this document does not authorize or approve any deviation or deviations from the requirements of applicable State Laws.
David Richter

PLANT:_____
FIELD:_____

DUCT AIR FLOW AND SIZING WORKSHEET (MANUAL J)

Model Number: 7609A6401 (51373)	**Date:** 07/26/18	**Insulation:** 22-15-33

1	**Name of Room**	Fayetteville, North Carolina					**Entire House**			
2	**Running Feet of Exposed Wall**						188.0			
3	**Ceiling Height at Walls (Ft) and Gross Wall Area (SqFt)**						8 ft	1504 sq. ft		
4	**Floor Plan Area (SqFt)**							1920 sq. ft		
5	**Gross Ceiling Area**							1920 sq. ft		
	Type of Exposure		**Const. Number**	**Panel Faces**	**HTM Htg.**	**HTM Clg.**	**Area or Length**	**Btuh Heating**	**Btuh S-Clg.**	**Btuh L-Clg.**
6a	**Windows and Glass Doors**	a	1E	W	15.30	35.06	229.00	3504	8030	
		b								
		c								
6b	**Skylights**	a								
7	**Solid Door**	a	11		22.5	15	42	945	630	
		b								
		c								
8	**Above Grade Walls**	a	12B		3.02	1.57	1233	3718	1940	
		b								
		c								
9	**Below Grade Walls**	a								
		b								
		c								
10	**Ceiling**	a	16B		1.40	1.67	1920	2679	3215	
11a	**Passive Floors**	a	19A		2.07	0.70	1920	3975	1340	
		b								
12	**Infiltration**	**Heat Loss**			4407	Btuh	WAR	4407		
		Sensible Gain			1861	Btuh	1.0		1861	
		Latent Gain			2664	Btuh				2664
13	**Internal**	a	Occupants at 230 and 200 Btuh				4		920	800
		b	Scenario Number		1				2400	
		c	Default Adjustments						500	
		d	Individual Appliances							
		e	Plants							
14	**Subtotals**	**Sum Lines 6 through 11a + line 12 + line 13**						19228	20836	3464
15	**Duct Loads**	**ELF-Loss and ELF-Gain**			0.150	0.095		2880	1982	
		Latent Gain								1053
16	**Ventilation Loads**	**Vent CFM**		89.60	**Exh**	89.60		4407	1861	2664
17	**Winter Humidification Load**				**Gal / Day**	5.86		2155		
18	**Piping Load**									
19	**Blower Heat**								1188	
20	**Total Load**	**Sum Lines 11b + lines 14 through 19**						28,670	25,867	7,181

APPROVED BY
NTA INC.
7/31/2018
Approval of this document does not authorize or approve any deviation or deviations from the requirements of applicable State Laws.
David Richter

DUCT AIR FLOW AND SIZING WORKSHEET (MANUAL J)

1	Dining				Kitchen				Living Room			
2		152.0 sq. ft				191.0 sq. ft				481.0 sq. ft		
3	8 ft	103.2 sq. ft			8 ft	98.4 sq. ft			8 ft	240.0 sq. ft		
4		152 sq. ft				191 sq. ft				481 sq. ft		
5		152.0 sq. ft				191.0 sq. ft				481.0 sq. ft		
	Area or	Btuh			Area or	Btuh			Area or	Btuh		
	Length	Heating	S-Clg.	L-Clg.	Length	Heating	S-Clg.	L-Clg.	Length	Heating	S-Clg.	L-Clg.
6a	45.00	689	1578		30.00	459	1052		50.00	765	1754	
6b												
7									21.00	473	315	
8	58.2	176	92		68.4	207	108		169.0	510	266	
9												
10	152.0	213	255		191.0	267	320		481.0	671	806	
11a	152	315	107		191	396	134		481	996	336	
12	WAR	302			WAR	288			WAR	703		
	0.07		128		0.07		122		0.16		297	
				183				174				425
13	0		0	0	1		230	200	1		230	200
			0				1000				900	
			0				0				250	
14		1695	2160	183		1617	2966	374		4118	5154	625
15		254	205			242	282			617	490	
16												
17												
18												
19			132				132				132	
20		1,949	2,497	183		1,860	3,380	374		4,735	5,776	625

APPROVED BY
NTA INC.
7/31/2018
Approval of this document does not authorize or approve any deviation or deviations from the requirements of applicable State Laws.
David Richter

DUCT AIR FLOW AND SIZING WORKSHEET (MANUAL J)

1	Utility				Bath 2				Bedroom 3			
2		103.0 sq. ft				71.0 sq. ft				212.0 sq. ft		
3	8 ft	74.4 sq. ft			8 ft	50.4 sq. ft			8 ft	214.4 sq. ft		
4		103 sq. ft				71 sq. ft				212 sq. ft		
5		103.0 sq. ft				71.0 sq. ft				212.0 sq. ft		
	Area or	Btuh			Area or	Btuh			Area or	Btuh		
	Length	Heating	S-Clg.	L-Clg.	Length	Heating	S-Clg.	L-Clg.	Length	Heating	S-Clg.	L-Clg.
6a	0.00	0	0		2.00	31	71		30.00	459	1052	
6b												
7	21.00	473	315									
8	53.4	162	85		48.4	146	77		184.4	556	291	
9												
10	103.0	144	173		71.0	100	119		212.0	296	355	
11a	103	214	72		71	147	50		212	439	148	
12	WAR	218			WAR	148			WAR	628		
	0.05		92		0.03		62		0.14		265	
				132				89				380
13	0		0	0	0		0	0	1		230	200
			500				0				0	
			0				0				0	
14		1211	1237	132		572	379	89		2378	2341	580
15		181	118			86	36			356	223	
16												
17												
18												
19			132				132				132	
20		1,392	1,487	132		657	547	89		2,734	2,696	580

APPROVED BY
NTA INC.
7/31/2018
Approval of this document does not authorize or approve any deviation or deviations from the requirements of applicable State Laws.
David Richter

DUCT AIR FLOW AND SIZING WORKSHEET (MANUAL J)

1	Bedroom 2				M. Bedroom				M.Bathroom			
2		224.0 sq. ft				316.0 sq. ft				170.0 sq. ft		
3	8 ft	259.2 sq. ft			8 ft	254.4 sq. ft			8 ft	210.4 sq. ft		
4		224 sq. ft				316 sq. ft				170 sq. ft		
5		224.0 sq. ft				316.0 sq. ft				170.0 sq. ft		
	Area or	Btuh			Area or	Btuh			Area or	Btuh		
	Length	Heating	S-Clg.	L-Clg.	Length	Heating	S-Clg.	L-Clg.	Length	Heating	S-Clg.	L-Clg.
6a	30.00	459	1052		30.00	459	1052		12.00	184	421	
6b												
7												
8	229.2	692	361		224.4	677	354		198.4	599	313	
9												
10	224.0	313	375		316.0	441	529		170.0	238	285	
11a	224	464	157		316	655	221		170	352	119	
12	WAR	760			WAR	745			WAR	617		
	0.17		321		0.17		315		0.14		260	
				459				451				373
13	0		0	0	1		230	200	0		0	0
			0				0				0	
			0				250				0	
14		2688	2266	459		2977	2951	651		1990	1398	373
15		403	216			446	281			298	133	
16												
17												
18												
19			132				132				132	
20		3,090	2,613	459		3,423	3,363	651		2,288	1,663	373

APPROVED BY
NTA INC.
7/31/2018
Approval of this document does not authorize or approve any deviation or deviations from the requirements of applicable State Laws.
David Richter

DUCT AIR FLOW AND SIZING WORKSHEET (MANUAL D)

Manufacturer: Cavalier Home Builders - Nashville Divisio Model: 7609A6401 (51373) Date: 7/26/18
1001 Wastern Avenue System Type: Perimeter Registers w/ Flex crossovers
Nashville, NC Design Location: Fayetteville-Pope AFB, North Carolina
Trunk Material: Metal
System Location: Floor
28,670 btuh Total Heat Loss Blower CFM: 1200 @ 0.7 E.S.P Equipment: 10 kw
33,048 btuh Total Heat Gain Duct Design CFM: 1120 Fan Setting:
System FR: 0.150
Design Conditions 99% DB = 27 F 1% DB = 94 F
WB = 76 F

Room - by - Room Analysis

Room	Trunk / Crossover	Total Eq. Length	Heat Btuh	Cool Btuh	Heat cfm	Cool cfm	Design cfm	Round Size	Rect (i.d.)	x	Size (i.d.)	Final Round Size	Final Velocity fpm
Dining	2 /	197	1949	2497	82	116	116	6				6	590
Kitchen	1 /	218	1860	3380	78	157	157	7				6	799
Living Room	3 / 1	194	2368	2888	99	134	134	6				6	682
Living Room	4 / 1	141	2368	2888	99	134	134	6	3		9	5	983
Utility	2 /	134	1392	1487	58	69	69	4	3		9	5	506
Bath 2	2 /	137	657	547	28	25	28	3	3		9	5	202
Bedroom 3	2 /	197	1367	1348	57	63	63	5				6	318
Bedroom 3	2 /	202	1367	1348	57	63	63	5				6	318
Bedroom 2	3 / 1	206	1545	1307	65	61	65	5				6	329
Bedroom 2	3 / 1	141	1545	1307	65	61	65	4	3		9	5	474
M. Bedroom	4 / 1	209	1712	1682	72	78	78	5				6	397
M. Bedroom	4 / 1	219	1712	1682	72	78	78	5				6	397
M.Bathroom	1 /	221	1144	832	48	39	48	4				6	244
M.Bathroom	1 /	275	1144	832	48	39	48	4				6	244
	/												
	/												
	/												
	/												
	/												
	/												
	/												
	/												
	/												
	/												
	/												
			22129	24023	926	1114	1143						

Trunk #	Room(s)	Design cfm	Square Duct Size	Round Duct Size	Final Square Duct Size	Final Round Size	Final Velocity fpm
Main Trunk #1	KitchenM.BathroomM.Bathroom	253	5x14	7	5x14	9	572
Main Trunk #2	DiningUtilityBath 2Bedroom 3Bedroom 3	337	5x14	8	5x14	9	764
Main Trunk #3	Living RoomBedroom 2Bedroom 2	263	5x14	7	5x14	9	596
Main Trunk #4	Living RoomM. BedroomM. Bedroom	290	5x14	8	5x14	9	656
Main Trunk #5							
Main Trunk #6							
Main Trunk #7							
Crossover #1	Living RoomLiving RoomBedroom 2Bedroom	553		11		12	705
Crossover #2							
Crossover #3							
Crossover #4							

2 Return(s) @ a length of	25 ft	and	20x25	Return Grill in Door	592	For Duct(s)	9in each	5x14	14	277
			608	Max CFMs for Door Grill					24	193

Equivalent lengths - 90s=50ft, Toe-Kick=95ft, In-line=80ft, Perimeter Boots=80ft, Crossovers=50ft
Registers - 4x10 will carry 120cfm max.
0 Fiberglass is equal to 0in round size
0 Fiberglass is equal to 0in round size
0 Fiberglass is equal to 0in round size
5x14 Metal is equal to 9" round size
3x9 in-line is equal to 5" round size

APPROVED BY
NTA INC.
7/31/2018
Approval of this document does not authorize or approve any deviation or deviations from the requirements of applicable State Laws.
David Richter

			Maximum Overage	
Maximum Total Cooling per Manual S:	38,005	btuh	15%	
Maximum Sensible Cooling per Manual S:	29,747	btuh	15%	
Maximum Heating per Manual S:	40,138	btuh	40%	or 10kw

Note: According to Manual S, if year-round comfort is desired, and if the cooling load is large in comparison to the heating load, a significantly oversized furnace may be required to obtain blower performance that is compatible with the size of the cooling coil.

Friction Rate Worksheet

Step #1	**Manufacturer's Blower Data**		
	ESP =	0.70	
	CFM =	1200	
Step #2	**Device Pressure Losses**		
	Direct expansion refrigerant coil =	0.1	
	Electric resistance heating coil =	0	
	Hot water coil =	0	
	Heat exchanger =	0	
	Low efficiency filter =	0.1	
	High or mid-efficiency filter =	0	
	Electronic filter =	0	
	Humidifier =	0	
	Supply outlet =	0.03	
	Return grille =	0.03	
	Balancing damper =	0	
	Other device =	0	
	Total DPL =	0.26	
Step #3	**Available Static Pressure**		
	ASP =	0.44	IWC
	ASP = (ESP - DPL)		
Step #4	**Total Effective Length (TEL)**		
	TEL =	300	ft
	Supply-side TEL + Return-side TEL		
Step #5	**Friction Rate Design Value (FR)**		
	FR =	0.15	
	FR =	IWC per 100ft	

EQUIPMENT INFORMATION		
	High	ESP
NUMBERS INCLUDE COIL		
Electric	1200	0.7

APPROVED BY
NTA INC.
7/31/2018
Approval of this document does not authorize or approve any deviation or deviations from the requirements of applicable State Laws.
David Richter

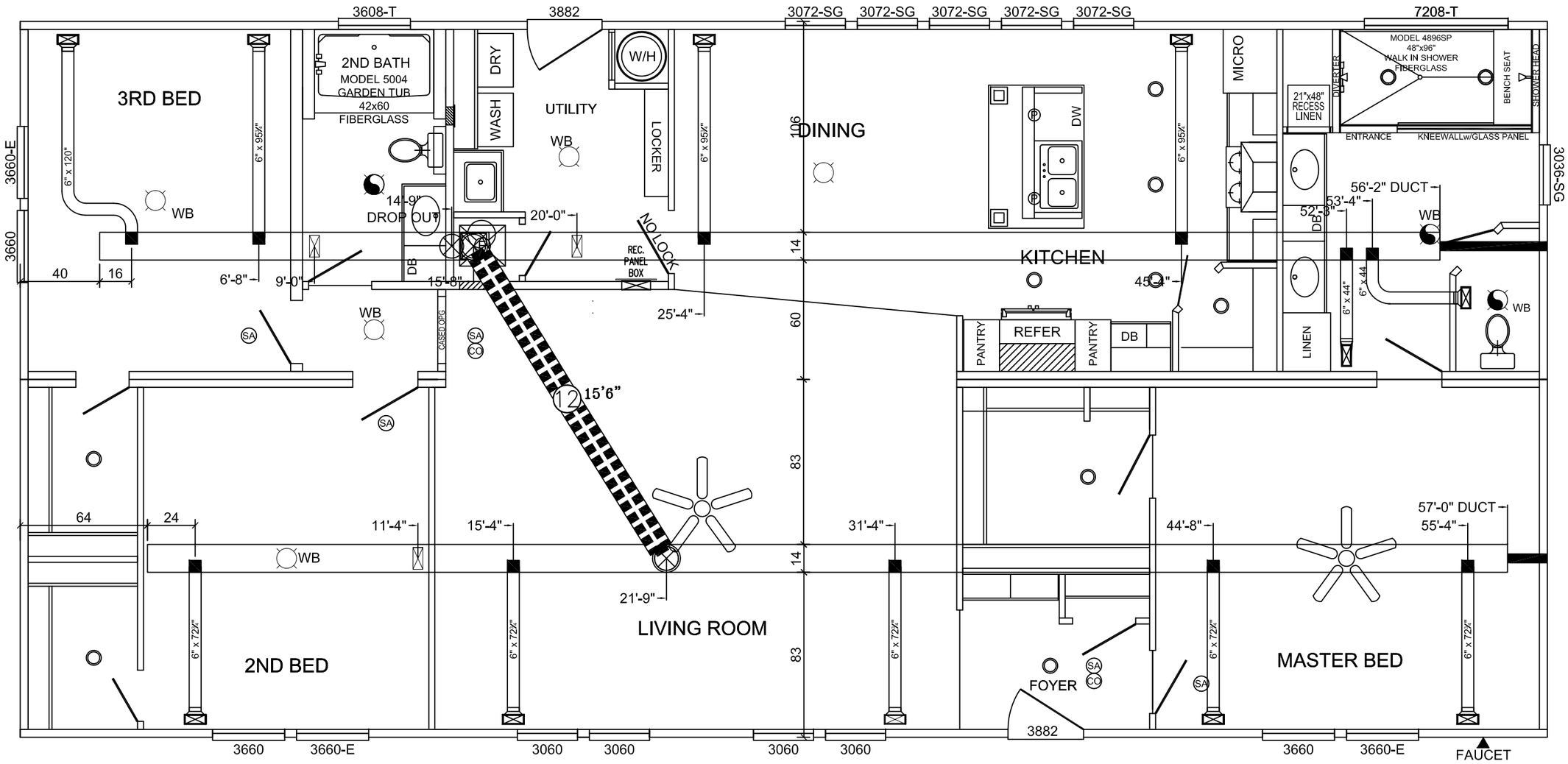

APPROVED BY
NTA INC.
7/31/2018
Approval of this document does not authorize or approve any deviation or deviations from the requirements of applicable State Laws.
David Richter

PER CALCULATIONS 10K FURNACE @ 40% OVERAGE MAX HEAT PER MANUAL S
HEAT PUMP WILL BE REQUIRED FOR THIS PROJECT.
12K FURNACE @ 15% OVERAGE MAX COOLING WILL BE INSTALLED.

CAVALIER HOME BUILDERS - NASHVILLE, NC DIVISION

51373-7609A6401-NC-100-OFF

REV. #	DESCRIPTION OF REVISION

Cavalier Home Builders

PRINT DATE:	DWG. BY:	TITLE:
7/25/18	MG	MODEL 6401- 32'-0" x 64'-0" - 3BR 2Bath HEAT LAYOUT
SCALE: 1/8" = 1'-0"	WIND ZONE(S):	

TM.

ENGINEERING BY
TRENCO
A MiTek Affiliate

Trenco
818 Soundside Rd
Edenton, NC 27932

Re: WPL-913-1114-011_(32W)
CMH MANUFACTURING, INC. - SCHULT

The truss drawing(s) referenced below have been prepared by Truss Engineering Co. under my direct supervision based on the parameters provided by Wood Perfect, Ltd.

Pages or sheets covered by this seal: I26417054 thru I26417067

My license renewal date for the state of North Carolina is December 31, 2016.

North Carolina COA: C-0844

Lumber design values are in accordance with ANSI/TPI 1 section 6.3
These truss designs rely on lumber values established by others.

APPROVED BY
NTA INC.
7/31/2018
Approval of this document does not authorize or approve any deviation or deviations from the requirements of applicable State Laws.
David Richter

NORTH CAROLINA PROFESSIONAL SEAL 14339 ENGINEER DAVID C. WERT

April 5,2016

Wert, David

IMPORTANT NOTE: The seal on these truss component designs is a certification that the engineer named is licensed in the jurisdictions(s) identified and that the designs comply with ANSI/TPI 1. These designs are based upon parameters shown (e.g., loads, supports, dimensions, shapes and design codes), which were given to TRENCO. Any project specific information included is for TRENCO's customers file reference purpose only, and was not taken into account in the preparation of these designs. TRENCO has not independently verified the applicability of the design parameters or the designs for any particular building. Before use, the building designer should verify applicability of the design parameters and properly incorporate these designs into the overall building design per ANSI/TPI 1, Chapter 2.

Job	Truss	Truss Type	Qty	Ply	CMH MANUFACTURING, INC. - SCHULT
WPL-913-1114-011_(32W)	9529-09	HINGED TRUSS	1	1	M9529 - 6/12 9' FLAT (NASH) - 09 Job Reference (optional)

I26417054

WoodPerfect, Guin, AL 35563

7.640 s Nov 10 2015 MiTek Industries, Inc. Tue Apr 05 14:54:04 2016 Page 1

ID:7DsdcZXbX3z0puliq?qj47z75_A-GYHGMcWk8hIs4ljpCi?tDAyeIDd9kjKPDovyRzzTkOX

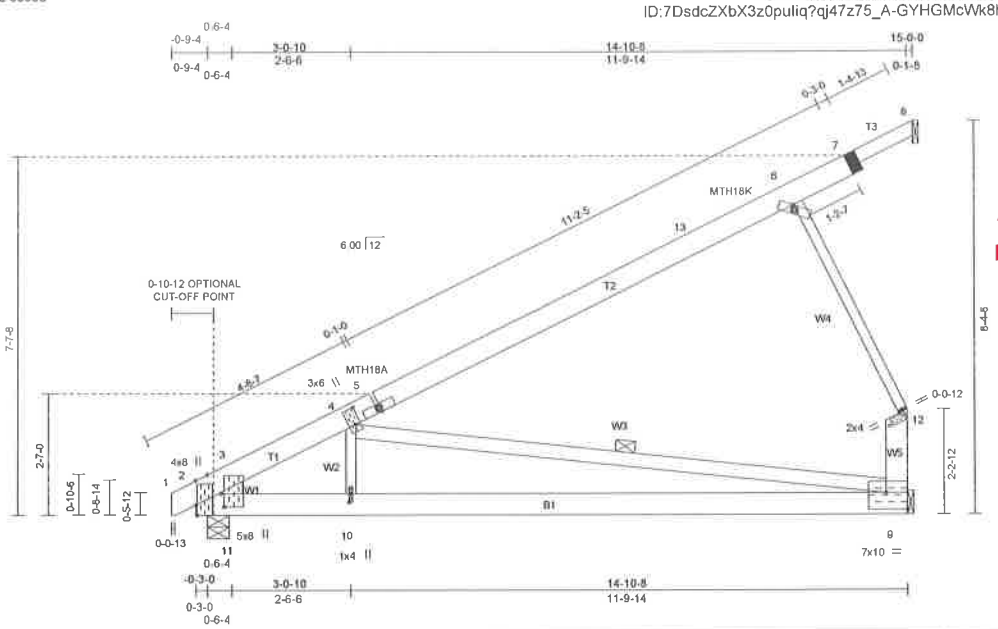

APPROVED BY
NTA INC.
7/31/2018
Approval of this document does not authorize or approve any deviation or deviations from the requirements of applicable State Laws.
David Richter

Plate Offsets (X,Y)-- [2:0-2-12,Edge], [4:0-4-4,0-1-4], [5:0-0-5,0-1-2], [6:0-0-11,0-1-2], [9:0-8-8,1-2-12], [9:Edge,0-4-4], [10:0-2-4,0-0-8], [11:0-3-6,0-0-12]

SPACING-: 2-0-0	SPACING-: 1-4-0	SPACING- 2-0-0	CSI.	DEFL. in (loc) l/defl L/d	PLATES GRIP
LOADING (psf)	LOADING (psf)	Plate Grip DOL 1.15	TC 0.79	Vert(LL) -0.17 9-10 >999 240	MT20 197/144
TCLL 23.1	TCLL 34.7	Lumber DOL 1.15	BC 0.55	Vert(TL) -0.39 9-10 >446 180	MT18HS 197/144
(Ground Snow=30.0)	(Ground Snow=45.0)	Rep Stress Incr YES	WB 0.64	Horz(TL) 0.02 9 n/a n/a	
TCDL 11.0	TCDL 16.5	Code IBC2009/TPI2007	(Matrix)		Weight: 80 lb
BCLL 0.0 *	BCLL 0.0 *				FT = 0%
BCDL 10.0	BCDL 15.0				

LUMBER-
TOP CHORD 2x6 SPF No.2 *Except*
7-8: 2x4 SPF No.2
BOT CHORD 2x6 SPF No.2
WEBS 2x3 SPF Stud *Except*
4-9: 2x4 SPF No.2, 9-12: 2x6 SPF Stud, 3-11: 2x6 SP No.2

BRACING- [PSA]
TOP CHORD Structural wood sheathing directly applied or 4-9-5 oc purlins, except end verticals.
BOT CHORD Rigid ceiling directly applied or 5-11-6 oc bracing.
WEBS 1 Row at midpt 4-9
JOINTS 1 Brace at Jt(s): 12

MiTek recommends that Stabilizers and required cross bracing be installed during truss erection, in accordance with Stabilizer Installation guide.

REACTIONS. (lb/size) 9=627/Mechanical, 8=0/Mechanical, 2=735/0-5-8 (min. 0-1-8)
Max Horz 8=108(LC 9), 2=564(LC 9)
Max Uplift 9=-642(LC 9), 2=-455(LC 9)
Max Grav 9=730(LC 14), 2=771(LC 14)

FORCES. (lb) - Max. Comp./Max. Ten. - All forces 250 (lb) or less except when shown.
TOP CHORD 2-3=-1340/696, 3-4=-1188/483, 4-5=-503/40, 5-13=-474/59, 6-13=-279/74, 9-12=-463/608
BOT CHORD 2-11=-1006/929, 10-11=-1006/929, 9-10=-1006/929
WEBS 4-10=0/439, 4-9=-779/731, 6-12=-511/671, 3-11=-335/252

REQUIRED FIELD JOINT CONNECTIONS - Maximum Compression (lb)/ Maximum Tension (lb)/ Maximum Shear (lb)/ Maximum Moment (lb-in)
7=148/105/70/0, 12=511/673/0/0

NOTES-
1) Wind: ASCE 7-05; 130mph @24in o.c.; TCDL=4.4psf; BCDL=4.0psf; (Alt. 150mph @16in o.c.; TCDL=6.6psf; BCDL=6.0psf); h=22ft; Cat. II; Exp C; enclosed; MWFRS (low-rise) gable end zone and C-C Exterior(2) zone; cantilever left exposed ;C-C for members and forces & MWFRS for reactions shown; Lumber DOL=1.60 plate grip DOL=1.60
2) TCLL: ASCE 7-05; Pg=30.0 psf (ground snow); Ps=23.1 psf (roof snow); Category II; Exp C; Partially Exp.; Ct=1.1
3) Roof design snow load has been reduced to account for slope.
4) Unbalanced snow loads have been considered for this design.
5) This truss has been designed for greater of min roof live load of 18.0 psf or 2.00 times flat roof load of 23.1 psf on overhangs non-concurrent with other live loads.
6) This truss has been designed for basic load combinations, which include cases with reductions for multiple concurrent live loads.
7) As requested, plates have not been designed to provide for placement tolerances or rough handling and erection conditions. It is the responsibility of the fabricator to increase plate sizes to account for these factors.
8) All plates are MT20 plates unless otherwise indicated.
9) See HINGE PLATE DETAILS for plate placement.
10) Provisions must be made to prevent lateral movement of hinged member(s) during transportation.
11) All additional member connections shall be provided by others for forces as indicated.
12) This truss has been designed for a 10.0 psf bottom chord live load nonconcurrent with any other live loads.

Continued on page 2

ALABAMA LICENSED No. 16371 PROFESSIONAL ENGINEER DAVID C. WERT

April 5,2016

ENGINEERING BY TRENCO A MiTek Affiliate
818 Soundside Road
Edenton, NC 27932

NOTES-

13) * This truss has been designed for a live load of 20.0psf on the bottom chord in all areas where a rectangle 3-6-0 tall by 2-0-0 wide will fit between the bottom chord and any other members.
14) Provide mechanical connection (by others) of truss to bearing plate capable of withstanding 642 lb uplift at joint 9 and 455 lb uplift at joint 2.
15) "Semi-rigid pitchbreaks including heels" Member end fixity model was used in the analysis and design of this truss.
16) Graphical purlin representation does not depict the size or the orientation of the purlin along the top and/or bottom chord.

APPROVED BY
NTA INC.
7/31/2018
Approval of this document does not authorize or approve any deviation or deviations from the requirements of applicable State Laws.
David Richter

STATE OF OHIO
DAVID C. WERT
E-51661
REGISTERED PROFESSIONAL ENGINEER

NORTH CAROLINA PROFESSIONAL SEAL 14339 ENGINEER DAVID C. WERT

STATE OF MISSOURI
DAVID C. WERT
NUMBER E-22940
PROFESSIONAL ENGINEER

DAVID C. WERT
REGISTERED
No. 8704721
STATE OF INDIANA
PROFESSIONAL ENGINEER

STATE OF ARKANSAS
REGISTERED PROFESSIONAL ENGINEER
No. 6739
DAVID C. WERT

April 5,2016

ENGINEERING BY TRENCO
A MiTek Affiliate
818 Soundside Road
Edenton, NC 27932

Symbols

PLATE LOCATION AND ORIENTATION

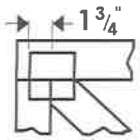

Center plate on joint unless x, y offsets are indicated. Dimensions are in ft-in-sixteenths. Apply plates to both sides of truss and fully embed teeth.

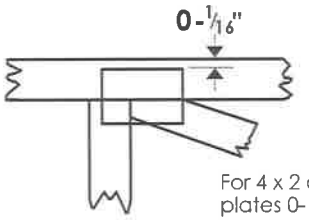

APPROVED BY
NTA INC.
7/31/2018
Approval of this document does not authorize or approve any deviation or deviations from the requirements of applicable State Laws.
David Richter

For 4 x 2 orientation, locate plates 0-1/16" from outside edge of truss.

This symbol indicates the required direction of slots in connector plates.

*** Plate location details available in MiTek 20/20 software or upon request.**

PLATE SIZE

4 x 4

The first dimension is the plate width measured perpendicular to slots. Second dimension is the length parallel to slots.

LATERAL BRACING LOCATION

Indicated by symbol shown and/or by text in the bracing section of the output. Use T or I bracing if indicated.

BEARING

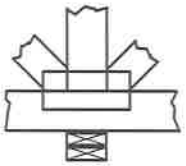

Indicates location where bearings (supports) occur. Icons vary but reaction section indicates joint number where bearings occur. Min size shown is for crushing only.

Industry Standards:

ANSI/TPI1: National Design Specification for Metal Plate Connected Wood Truss Construction.
DSB-89: Design Standard for Bracing.
BCSI: Building Component Safety Information, Guide to Good Practice for Handling, Installing & Bracing of Metal Plate Connected Wood Trusses.

Numbering System

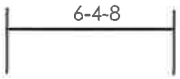

dimensions shown in ft-in-sixteenths (Drawings not to scale)

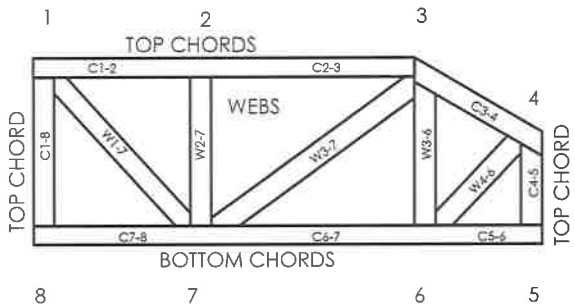

JOINTS ARE GENERALLY NUMBERED/LETTERED CLOCKWISE AROUND THE TRUSS STARTING AT THE JOINT FARTHEST TO THE LEFT.

CHORDS AND WEBS ARE IDENTIFIED BY END JOINT NUMBERS/LETTERS.

PRODUCT CODE APPROVALS

ICC-ES Reports:

ESR-1311, ESR-1352, ESR1988
ER-3907, ESR-2362, ESR-1397, ESR-3282

Trusses are designed for wind loads in the plane of the truss unless otherwise shown.

Lumber design values are in accordance with ANSI/TPI 1 section 6.3 These truss designs rely on lumber values established by others.

MiTek
ENGINEERING BY TRENCO
A MiTek Affiliate

MiTek Engineering Reference Sheet: MII-7473 rev. 10/03/2015

General Safety Notes

Failure to Follow Could Cause Property Damage or Personal Injury

1. Additional stability bracing for truss system, e.g. diagonal or X-bracing, is always required. See BCSI.
2. Truss bracing must be designed by an engineer. For wide truss spacing, individual lateral braces themselves may require bracing, or alternative T or I bracing should be considered.
3. Never exceed the design loading shown and never stack materials on inadequately braced trusses.
4. Provide copies of this truss design to the building designer, erection supervisor, property owner and all other interested parties.
5. Cut members to bear tightly against each other.
6. Place plates on each face of truss at each joint and embed fully. Knots and wane at joint locations are regulated by ANSI/TPI 1.
7. Design assumes trusses will be suitably protected from the environment in accord with ANSI/TPI 1.
8. Unless otherwise noted, moisture content of lumber shall not exceed 19% at time of fabrication.
9. Unless expressly noted, this design is not applicable for use with fire retardant, preservative treated, or green lumber.
10. Camber is a non-structural consideration and is the responsibility of truss fabricator. General practice is to camber for dead load deflection.
11. Plate type, size, orientation and location dimensions indicated are minimum plating requirements.
12. Lumber used shall be of the species and size, and in all respects, equal to or better than that specified.
13. Top chords must be sheathed or purlins provided at spacing indicated on design.
14. Bottom chords require lateral bracing at 10 ft. spacing, or less, if no ceiling is installed, unless otherwise noted.
15. Connections not shown are the responsibility of others.
16. Do not cut or alter truss member or plate without prior approval of an engineer.
17. Install and load vertically unless indicated otherwise.
18. Use of green or treated lumber may pose unacceptable environmental, health or performance risks. Consult with project engineer before use.
19. Review all portions of this design (front, back, words and pictures) before use. Reviewing pictures alone is not sufficient.
20. Design assumes manufacture in accordance with ANSI/TPI 1 Quality Criteria.

PRINT DATE: 07/25/2018
Model: 7609A6401 (51373)
Customer: Webb
Harnett Co., NC

OFF FRAME BASEMENT & CRAWL FOUNDATION DESIGN FOR:

30' - 0 " 2-SECTION MODULAR

1 STORY- W.O ATTIC

Attic without storage where the maximum clear height between joist and rafter is less than 42 inches or req'd insulation depth exceeds the depth of the bottom chord.

PERIMETER ANCHORED SYSTEM- BUILDING IS SECURED TO FOUNDATION WALLS TO SUPPORT WIND AND SEISMIC FORCES.

SIDEWALLS ARE SUPPORTED (PERIMETER BLOCKED)

BUILDING CODE INFORMATION:

IRC ('06 &' 09)
ASCE 7-05
2012 NORTH CAROLINA RESIDENTIAL CODE

BUILDING SITE INFORMATION:

MAXIMUM WIND SPEED & EXPOSURE: 100 MPH EXPOSURE C-enclosed
MINIMUM SOIL BEARING CAPACITY: 2000 PSF
MAXIMUM GROUND SNOW(S): 30 PSF,
Flat roof snow load (Pg)=23.1 PSF
SEISMIC DESIGN CATEGORY: C
DESIGN SPECTRAL RESPONSE (S_{DS}): 0.49
SEISMIC SOIL SITE CLASS: D

NORTH CAROLINA PROFESSIONAL SEAL 30245 ENGINEER JOHN W. WELDY
7/30/18

APPROVED BY
NTA INC.
7/31/2018
Approval of this document does not authorize or approve any deviation or deviations from the requirements of applicable State Laws.
David Richter

HOME INFORMATION:

UNIT WIDTH: 30' - 0 "
MAX. UNIT LENGTH: 64 ft.
ROOF PITCH: 6/12 to 6/12
DESIGN LOADS: 40 PSF FL. LL., 7PSF T.C.D.L., 8PSF B.C. D.L., 13PSF FL. DL. &, 10PSF B.C.L.L
MAX. SIDEWALL HEIGHT: 96 INCHES
TOTAL MATING WALL RIM JOIST BEAMS: (4) 2X10 #2 SP
RIM JOIST SPLICES: 4" X 5" MiTek M18 metal plates each side

MODEL #: 7609A6401 (51373)
OFF FRAME FLOOR
PLANT NUMBER: 976

FILENAME:976I-10.R.K.E.16.3.210(_)

program version: 18.1

PAGE DESCRIPTION	DETAIL	PAGE #

APPROVED BY
NTA INC.
7/31/2018
Approval of this document does not authorize or approve any deviation or deviations from the requirements of applicable State Laws.
David Richter

NORTH CAROLINA PROFESSIONAL SEAL 30245 ENGINEER JOHN W. WELDY
7/30/18

Model: 7609A6401 (51373)
Customer: Webb
Harnett Co., NC

FILENAME:976I-10.R.K.E.16.3.210(_)

program version: 18.1

Preface

This foundation design manual is dedicated to the ever-growing trend to place homes over basements and permanent foundations. CMH Manufacturing, Inc. has attempted to address the more common installation configurations. These may or may not be the only acceptable designs for basements or permanent foundations. If deviations are made from these details, it is the homeowner's and/or installation contractor's responsibility to obtain proper documentation and engineer's details of construction acceptable to the local authority having jurisdictions. CMH Manufacturing, Inc. will not supply any details other than what is contained in the following design manual. If an alternate design is requested it must be provided by an independent engineer subject to local approval. The owner/contractor is responsible for any additional construction details, permits, inspections and fees associated with these items.

Setting a home over a basement or permanent foundation requires special knowledge, experience and equipment to accomplish a safe and proper set. Contractors performing this type of installation must be licensed, bonded and insured to protect all aspects of this type of work.

APPROVED BY
NTA INC.
7/31/2018
Approval of this document does not authorize or approve any deviation or deviations from the requirements of applicable State Laws.
David Richter

Instructions

1. Determine site soil classification, (see table R405.1).

2. The provided foundation and anchorage designs are not applicable for the following conditions. In all these cases a complete geotechnical evaluation must be performed and foundation must be designed by a professional engineer in accordance with section 1805.8 (IBC) for site specific conditions.
• Site contains OL, OH or Pt class soils.
• Site contains compressible or shifting soils.
• Site contains expansive soils per IRC (R403.1.8.1) or per local authority and adopted code.
• Site contains soils which do not provide the minimum allowable soil bearing strength as specified per the provided designs.
• Foundation walls support unbalanced loads on opposite sides of building, such as a daylight basement or walk out basement where the building aspect ratio, L/W, exceeds the values specified in Table L.
• Site with soils subject to liquifaction or soil containing high concerntration of sulfate.

3. Determine foundation wall height for each wall of foundation. Reference ***Detail – D1 or D2*** for wall height.

4. Determine height of backfill for each wall of foundation. Reference ***Table L*** when backfill heights along the foundation wall are unbalanced. Reference ***Detail – D1 or D2*** for perimeter foundation wall construction.

5. Determine what type of mateline supports will be used. Reference ***Detail - D3, D4, D5 or D7*** for mateline columns and ***Detail – D14*** for cross beams.

6. Determine if type H connector plates will be used around the perimeter of the building. Fastening and anchoring tables have been provided with and without the use of the H connectors.

7. Find the ***Floor to Sill Plate & Sill Plate to Foundation*** table for site soil classification.

8. Find site wall height and backfill height line and follow this line across. Heights are listed as maximums, therefore any line beneath (greater height) may be utilized for items 10 ,11 & 12 below.

9. If type H connectors will be installed the table labeled ***With Type H Plate Connectors*** can be utilized. Note (6) will specify spacing for H plates along sidewalls and Note (7) will specify spacing for H plates along each endwall.

10. Select desired rim to sill connection from line in table (E, F or G for sidewalls and E or G for endwalls).

11. Select desired anchor type (4 or 5) for sill to foundation wall connection and determine anchor spacing for sidewall and endwall under corresponding column.

12. Determine if shearwall foundation holddowns are required by checking far right column within selected row. See ***Shearwall Foundation Holddown Detail (Detail D18)*** for connection requirements .

The above process may be repeated as desired for different foundation wall and backfill combinations.

General Notes

1. Foundation plans and details developed by CMH Manufacturing, Inc. are provided to our company owned sales centers and wholesale distribution partners. Alternate foundation systems may be used in lieu of these plans provided they are designed by a local professional Engineer or Architect familiar with the local soil and climate conditions, and are approved by the local authority having jurisdiction.

2. All notes stating "in field" or "by owner" are obligations pertaining to owner/contractor.

3. Owner /Contractor shall provide complete foundation, including footing drains, vapor barrier, sill plate, anchor bolts, stair area, slab and footing reinforcement along with damp proofing, waterproofing, backfill, and all finish work per Chapter 4 of IRC or per adopted local building code.

4. Owner/Contractor shall be responsible for performing all work in accordance with previously approved construction details and obtaining all necessary inspections as required by local or state authorities.

5. Not designed for areas likely to have collapsible, expansive, compressible, shifting, liquifaction, soil containing high concentration of sulfate or other unknown soil characteristics. In these conditions a local engineer must provide foundation design and the building official shall determine whether to require a soil test to determine the soil characteristics. This soil test shall be made by an approved testing agency using an approved method.

6. Pier spacing is dimensioned to centerline unless otherwise noted.

7. The foundation dimensions shown are nominal. An increase in module width should be expected due to module expansion, setting tolerances, etc. The foundation contractor should consult with the manufacturer of the modules prior to construction of the foundation to determine the actual width of the home and placement of anchors.

8. All steel support columns shall have protective coating and a load capacity equal to or greater than specified on foundation plan (k=1000 pounds).

9. All foundation construction materials and installation shall be in accordance with all state and local codes.

10. Backfill shall not be placed against the wall until the wall has sufficient strength and has been anchored to the floor above or has been sufficiently braced to prevent damage by the backfill. Heavy-equipment must be restricted to a minimum distance to the foundation at least equal to the depth of the foundation.

11. Solid cap block or cement fill required at top courses of all masonry piers or pilasters.

12. The foundation design has been designed to be placed in the seismic zone indicated on the cover of this document. Please note that all CMH structures have been designed for seismic (zone/category) A, B, or C only, unless otherwise noted on floor plan and cover page of these instructions.

13. All piers shall be constructed of 8"x8"x16" concrete masonry units conforming to ASTM C90 with a minimum compressive strength of 700 psi. Masonry foundation walls must be laid in type m or s mortar. When required per tables or details, piers of masonry units shall be laid in type m or s mortar. All dry stack masonry should be surfaced bonded with an approved adhesive product.

APPROVED BY
NTA INC.
7/31/2018
Approval of this document does not authorize or approve any deviation or deviations from the requirements of applicable State Laws.
David Richter

14. All reinforcing steel shall be Grade 60 minimum. All splices shall be lapped 24” minimum and splices shall be offset 30” minimum within same footer.

15. All concrete grout shall be 3000 psi at 28 days.

16. Reference the model plan drawing for specific foundation layout.

17. Concrete footings shall have a minimum compressive strength of 3000 psi at 28 days. Concrete foundation walls and other concrete exposed to weather shall have a minimum compressive strength of 3000 psi at 28 days and in moderate andsevere weather areas the concrete shall be air entrained no less than 5 percent and not more than 7 percent.See table R301.2(1) and R402.2 of IRC

18. All exterior footings shall be placed at least 12” below the undisturbed ground surface. All exterior footings shall extend below the frost line or otherwise frost protected in accordance with Sections R403.1.4.1 through R403.1.4.2 of IRC or per adopted local building code.

19. Top of foundation walls shall extend a minimum of 6” above finished adjacent grade. Wood framing members, including wood sheathing, that rest on exterior foundation walls and are less than 8” from exposed earth shall be of naturally durable or preservative-treated wood. Wood floor joist shall not be closer than 18” from exposed ground in under floor space.

20. Contractor shall verify all site conditions and dimensions prior to starting foundation. Notify home manufacturer of any discrepancies immediately.

21. The foundation must be designed and built to local codes and ordinances and must be approved and inspected by local building officials.

22. Access shall be to all under floor spaces. Access shall be a minimum of 18” by 24”. If mechanical equipment is installed is this area, please refer to the Mechanical Code for minimum access opening. Through wall access openings shall not be located under an exterior door.

23. Under floor space shall be ventilated with a net area ratio not less than 1 square foot for each 150 square feet of under floor space area placed in accordance with local codes. Ratio may be reduced to 1/1,500 where ground is covered with a 6-mil polyethylene or approved vapor retarderl.

24. Field installed wiring in basement is subject to local inspection. Basement smoke alarms must be installed at foot of stairs and interconnected with home smoke alarms and tested on site. Smoke alarms must be located, installed, and tested in conformance with local building requirements.

25. Large clear spans along mating wall require a column or pier at each end. See model specific foundation plan for required capacity and additional column requirements.

26. Basement stairs (widths, handrails, clearances, headroom, landings, fire protection, etc.) are the responsibility of the owner/contractor and must be constructed to comply with local building codes.

27. Owner/contractor shall not alter basement stair opening without written approval from CMH Manufacturing, Inc.

APPROVED BY
NTA INC.
7/31/2018
Approval of this document does not authorize or approve any deviation or deviations from the requirements of applicable State Laws.
David Richter

28. Lighting and receptacles in basement are the responsibility of owner/contractor.

29. Termite protection shall be provided per the building code and local requirements and are responsibility of owner/contractor.

30. Ground snow load is indicated on foundation plans. Snow load must be verified per locality. Building has not been designed to be located within a Tsunami design zone.

31. This structure has not been designed to be located within flood hazard locations or in Coastal A Zones. When site is located in a flood hazard area or in Coastal A Zones as determined by the local authority having jurisdiction or flood hazard maps. The unit shall have lowest floor elevated above the design floor elevation. Foundation and anchorage designs shall be provided by a local engineer in conformance with locally adopted building code and ASCE-24-14.

32. All connection hardware, anchor bolts, straps, hold-downs, washers and fasteners shall be minimum of ASTM A653 Type G185 zinc coated galvanized or stainless when in contact with pressure treated sill plates or other pressure treated lumber.

33. Radon control, when required by a local jurisdiction, shall be provided and installed by others in accordance with appendix F of the IRC.

34. Topographic wind effects have not been considered. Home has not been designed to be located in areas designated as having local historical data documenting structural damage to buildings caused by wind speed-up at isolated hills, ridges and escarpments.

35. Surface drainage shall be deverted to a storm sewer or other approved collection point. Lots shall be graded to drain surface water away from foundation walls. The grade shall fall a minimum of 6 inches within the first 10 feet.

36 A 6-mil-thick polyethylene moisture barrier shall be applied over the porous layer with the basement floor constructed over the polyethylene.

37. Concrete and Masonry Foundation walls that retain earth and enclose interior spaces and floors below grade shall be damp proofed from the top of the footing to the finished grade. Masonry walls shall have not less than 3/8" Portland cement parging applied to the exterior of the wall. The parging shall be damp proofed in accordance with one of the following.

APPROVED BY NTA INC. 7/31/2018
Approval of this document does not authorize or approve any deviation or deviations from the requirements of applicable State Laws.
David Richter

a. Bituminous coating, b. 3 pound per sq. yard of arcylic modified cement, c. 1/8" coat of surface-bonding cement complying with ASTM C887, d. Material permitted for waterproofing per Section R406.2, e. Other approved methods or materials.

38. Concrete and masonry foundation walls that retain earth and enclose interior spaces and floors below grade in areas of high water table or other severe soil-water conditions shall be waterproofed from the top of the footing to the finished grade in accordance with one of the following:

a. 2-ply hot-mopped felts, b. 55 pound rolled roofing, c. 6-mil polyvinyl chloride, 6-mil polyethylene, d. 40-mil polymer-modified asphalt., e, 60-mil flexible polymer cement, f. 1/8" cement-based, fiber-reinforced, waterproof coating, g. 60-mil solvent-free liquid-applied synthetic rubber.

39. If building is located within a wind borne debris region glazed openings shall be protected from wind borne debris. Wind Borne debris protection is the responsibility of others.

40. When Geotechnical report is required or available, all recommendations shall be followed and geotechnical engineer shall review all foundation plans to verify applicability with recommendations and engineer shall be present on regular basis during site preparation, fill placement and foundation excavation.

41. RESERVED
42.Reserved.

43. A 6-mil polyethylene or approved vapor retarder with joints lapped not less than 12 inches shall be placed between the concrete floor slab and the base course or the prepared subgrade.

SOIL CLASSIFICATION

TABLE R405.1 W/ NC admendments						
LATERAL SOIL LOAD	UNIFIED SOIL CLASSIFICATION SYSTEM SYMBOL	SOIL DESCRIPTION	DRAINAGE CHARACTERISTICS[a]	FROST HEAVE POTENTIAL	VOL. CHANGE POTENTIAL EXPANSION[b]	ALLOWABLE SOIL PRESSURE
30 psf LATERAL SOIL LOAD	GW	Well-graded gravels, gravel sand mixtures, little or no fines	Good	Low	Low	5000
	GP	Poorly graded gravel or gravels sand mixtures, little or no fines	Good	Low	Low	5000
	SW	Well-graded gravels, gravelly sands, little or no fines	Good	Low	Low	3000
	SP	Poorly graded sand, or gravelly sands, little or no fines	Good	Low	Low	3000
45 psf LATERAL SOIL LOAD	GM	Silty gravels, gravel-sand-silt mixtures	Good	Medium	Low	3000
	SM	Silty sand, sand-silt mixtures	Good	Medium	Low	3000
	GC	Clayey gravels, gravel-sand-clay mixtures	Medium	Medium	Low	3000
60 psf LATERAL SOIL LOAD	SC	Clayey sands, sand-clay mixture	Medium	Medium	Low	3000
	ML	Inorganic silts and very find sands, rock flour, silty or clayey fine sands or clayey silts with slight plasticity	Medium	High	Low	2000*
	CL	Inorganic clays of low to medium plasticity, gravelly clays, sandy clays, silty clays, lean clays	Medium	Medium	Medium to Low	2000*
	CH	Inorganic clays of high plasticity, fat clays	Poor	Medium	High	2000*
	MH	Inorganic silts, micaceous or diatomaceous fine sandy or silty soils, elastic silts	Poor	High	High	2000*
SPECIAL INSPECTION REQUIRED	OL	Organic silts and organic silty clays of low plasticity	Poor	Medium	Medium	SPECIAL INSPECTION REQUIRED
	OL	Organic clays of medium to high plasticity, organic silts	Unsatisfactory	Medium	High	
	Pt	Peat and other highly organic soils	Unsatisfactory	Medium	High	

a. The percolation rate for good drainage is over 4 inches per hour, medium drainage is 2 inches to 4 inches per hour, and poor is less than 2 inches per hour.

b. Soils with low potential expansion typically have a plasticity index (PI) of 0 to 15, soils with a medium potential expansion have a PI of 10 to 35 and soils with a high potential expansion have PI greater than 20.

* Where the building offical determines that in place soils with an allowable bearing capacity of less than 2000 psf are likely to be present at the site, the allowable bearing capacity shall be determined by a soils investigation.

APPROVED BY
NTA INC.
7/31/2018
Approval of this document does not authorize or approve any deviation or deviations from the requirements of applicable State Laws.
David Richter

FILENAME:976I-10.R.K.E.16.3.210(_)

TABLE R404.1.1:IRC ('06 &' 09) PERIMETER FOUNDATION WALL MINIMUM REQUIREMENTS [Seismic Seismic Zone: Design]

		GW, GP, SW, & SP Soil Class (30 PSF)			GM, GC, SM-SC, & ML Soil Class (45 PSF)			SC, MH, ML-CL, & Inorganic CL Soil Class (60 PSF)		
Max. Wall Height	Maximum Unbalanced Fill	Plain Masonry [1,8,9] Walls	8" Reinforced Masonry Walls [5,9]	8" Poured Concrete Walls [6, 7]	Plain Masonry [1,8,9] Walls	8" Reinforced Masonry Walls [5,9]	8" Poured Concrete Walls [6, 7]	Plain Masonry [1,8,9] Walls	8" Reinforced Masonry Walls [5,9]	8" Poured Concrete Walls [6, 7]
0 to 5 feet	4	6 in. solid (3) or 8 in.	-	PC	6 in. solid (3) or 8 in.	-	PC	6 in. solid (3) or 8 in.	-	PC
	5	6 in. solid (3) or 8 in.	-	PC	8 in.	-	PC	10 in.	-	PC
6 feet to 7 feet	4	6 in. solid (3) or 8 in.	#4 @ 48 in. o.c.	PC	8	#4 @ 48 in. o.c.	PC	8	#4 @ 48 in. o.c.	PC
	5	6 in. solid (3) or 8 in.	#4 @ 48 in. o.c.	PC	10 in.	#4 @ 48 in. o.c.	PC	10 in.	#4 @ 48 in. o.c.	PC
	6	10 in.	#4 @ 48 in. o.c.	PC	12 in.	#5 @ 48 in. o.c.	PC	10 in. solid (3)	#5 @ 48 in. o.c.	#5 @ 48 in. o.c.
	7	12 in.	#5 @ 48 in. o.c.	PC	10 in. solid (3)	#6 @ 48 in. o.c.	#5 @ 46 in. o.c.	12 in. solid (3)	'#6 @ 40 in. o.c.	#6 @ 48 in. o.c.
8 feet	4	6 in. solid (3) or 8 in.	#4 @ 48 in. o.c.	PC	6 in. solid (3) or 8 in.	#4 @ 48 in. o.c.	PC	8	#4 @ 48 in. o.c.	PC
	5	6 in. solid (3) or 8 in.	#4 @ 48 in. o.c.	PC	10 in.	#4 @ 48 in. o.c.	PC	12 in.	#4 @ 48 in. o.c.	PC
	6	10 in.	#4 @ 48 in. o.c.	PC	12 in.	#5 @ 48 in. o.c.	PC	12 in. solid (3)	#5 @ 48 in. o.c.	#6@32in o.c.
	7	12 in.	#5 @ 48 in. o.c.	PC	12 in. solid (3)	#6 @ 48 in. o.c.	#5 @ 41 in. o.c.	Footnote (4)	'#6 @ 40 in. o.c.	#6@32 in. o.c.
	8	10 in. solid (3)	#5 @ 48 in. o.c.	#6@41	12 in. solid (3)	#6 @ 48 in. o.c.	#6 @ 43 in. o.c.	Footnote (4)	'#6 @ 32 in. o.c.	#6@18 in. o.c.
9 feet	4	6 in. solid (3) or 8 in.	#4 @ 48 in. o.c.	PC	6 in. solid (3) or 8 in.	#4 @ 48 in. o.c.	PC	8 in.	#4 @ 48 in. o.c.	PC
	5	8 in.	#4 @ 48 in. o.c.	PC	10 in.	#4 @ 48 in. o.c.	PC	12 in.	#5 @ 48 in. o.c.	PC
	6	10 in.	#4 @ 48 in. o.c.	PC	12 in.	#4 @ 48 in. o.c.	PC	12 in. solid (3)	#6 @ 48 in. o.c.	#6@35 in. o.c.
	7	12 in.	#5 @ 48 in. o.c.	PC	12 in. solid (3)	#6 @ 48 in. o.c.	#6@35 in. o.c.	Footnote (4)	'#6 @ 40 in. o.c.	#6@32 in. o.c.
	8	12 in. solid (3)	#6 @ 48 in. o.c.	#6@36 in. o.c.	Footnote (4)	'#6 @ 40 in. o.c.	#6@32 in. o.c.	Footnote (4)	#6 @ 24 in. o.c.	#6@28 in. o.c.
	9	Footnote (4)	'#6 @ 40 in. o.c.	#6@35 in. o.c.	Footnote (4)	#6 @ 24 in. o.c.	#6@25 in. o.c.	Footnote (4)	#6 @ 16 in. o.c.	#6@24 in. o.c.
10 feet	8	NA	#6 @ 48 in. o.c.	#6 @ 35 in. o.c.	NA	#6 @ 32 in. o.c.	#6 @ 29 in. o.c.	NA	#6 @ 24 in. o.c.	#6 @ 21 in. o.c.
	9	NA		#6@34 in. o.c.	NA	#6 @ 24in. o.c.	#6@22 in. o.c.	NA	#6 @ 16 in. o.c.	#6@16 in. o.c.
	10	NA	#6 @ 32 in. o.c.	#6 @ 27 in. o.c.	NA	#6 @ 16 in. o.c.	#6 @ 17 in. o.c.	NA	#6 @ 16 in. o.c.	#6 @ 13 in. o.c.

Unbalanced backfill height is the difference in height between the exterior finish grade level and the top of the basement slab.

Backfill shall be placed only AFTER the home has been anchored to the foundation wall.

(1) - All block must conform to ASTM C90 (700 psi rated) and be laid in a running bond of Type M or S mortar with overlapping pattern . Ungrouted hollow masonry units are permitted except where otherwise indicated.

(3) - Solid grouted hollow units or solid masonry units.

(4) - Wall construction per reinforced units or design required.

(5) - Vertical reinforcement shall be Grade 60 minimum. The distance from the face of the soil side of the wall to the center of vertical reinforcement shall be at least 5".

(6) - PC = Plain Concrete (Concrete with less reinforement than minimum for reinforced concrete)

(7) - All reinforcement shall be Grade 60 minimum. The distance from the face of the soil side of the wall to the vertical reinforcement shall be at least 6 1/16", but not more than 6 11/16".

'All information above has been extracted from the 2009 IRC Tables R404.1.1(1), Tables R404.1.1(2) Tables R404.1.2(3)

(8)

(9)

APPROVED BY
NTA INC.
7/31/2018
Approval of this document does not authorize or approve any deviation or deviations from the requirements of applicable State Laws.
David Richter

FILENAME:976I-10.R.K.E.16.3.210(_)

Maximum Aspect Ratio, L/W for Unbalanced Foundations

		SOIL CLASS		
Maximum Wall Height	**Maximum Unbalanced Fill**	**GW, GP, SW, & SP (30 PSF)**	**GM, GC, SM-SC, & ML (45 PSF)**	**SC, MH, ML-CL, & Inorganic CL (60 PSF)**
7 feet	4	4.0	4.0	4.0
	5	4.0	3.4	2.6
	6	3.0	2.0	1.5
	7	1.9	1.2	0.9
8 feet	4	4.0	4.0	4.0
	5	4.0	3.9	2.9
	6	3.4	2.3	1.7
	7	2.1	1.4	1.1
	8	1.4	1.0	0.7
9 feet	4	4.0	4.0	4.0
	5	4.0	4.0	3.3
	6	3.8	2.6	1.9
	7	2.4	1.6	1.2
	8	1.6	1.1	0.8
	9	1.1	0.8	0.6

Instructions:

1 - Determine foundation wall height, unbalanced fill depth, and soil class to determine aspect ratio from table above.
2 - Multiple "W" times aspect ratio.
3 - Result is equal to the maximum allowable building length on the exposed side.

APPROVED BY
NTA INC. 7/31/2018
Approval of this document does not authorize or approve any deviation or deviations from the requirements of applicable State Laws.
David Richter

Example 1 - check sidewall for 26'-8" x 60'-0" home.
Basement Wall Height = 8'-0"
Unbalanced backfill = 7'-0"
Soil Class = SP
Aspect Ratio from Table above = 2.1

26.67 x 2.1 = 56'-0" max. allowable length - **example fails**

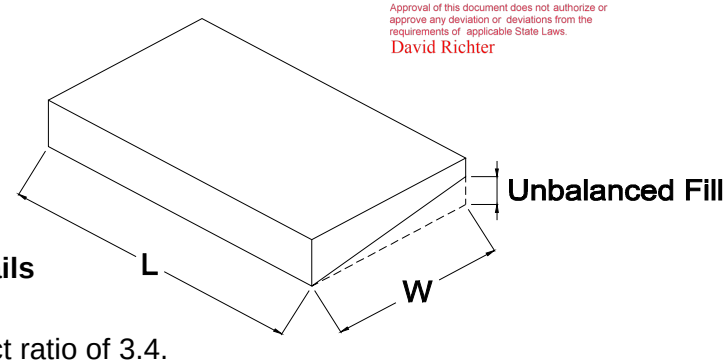

Try again using 6'-0" max. unbalanced fill with an aspect ratio of 3.4.
26.67 x 3.4 = 90'-8" max. allowable length - **example passes**
Max. allowable backfill is 6'-0"

Example 2 - check endwall for 26'-8" x 60'-0" home.
Basement Wall Height = 8'-0"
Unbalanced backfill = 7'-0"
Soil Class = SP
Aspect Ratio from Table above = 2.1

60 x 2.1 = 126'-0" max. allowable length - **example passes**

Required Rim Joist to Sill Plate Fastening at wall "L".
Use a 20 Gauge metal angle clip at 24" o.c. with (5) 8d nails per leg or an approved connector supplying 230 pounds per linear foot capacity.

"L" = total overall dimension of the building on the exposed side
"W" = the total overall dimension of the building on the side adjacent to the exposed side

Clayton home building group

UNBALANCED FOUNDATIONS (TABLE L)

DATE: 3/27/07 | FILENAME:976I-10.R.K.E.16.3.210(_)

TABLE M - MINIMUM CONCRETE BLOCK PIER AND FOOTER SIZE AT MATING WALL COLUMNS (REF. DETAILS D3 OR D5)

							# of Uplift Ties
GROUND SNOW		30					
MAXIMUM MATING LINE SPAN BETWEEN MATING WALL COLUMN SUPPORTS	4 '	(S) 26"x26"X9" OR 30" Dia. X 11"					0
	6 '	(D) 34"x34"X9" OR 40" Dia. X 16"					0
	8 '	(D) 34"x34"X9" OR 40" Dia. X 16"					1
	10 '	(D) 34"x34"X9" OR 40" Dia. X 16"					1
	12 '	(D) 34"x34"X9" OR 40" Dia. X 16"					1
	14 '	(D) 34"x34"X9" OR 40" Dia. X 16"					1
	16 '	(D) 34"x34"X9" OR 40" Dia. X 16"					1
	18 '	(D) 34"x34"X9" OR 40" Dia. X 16"					1
	20 '	(D) 34"x34"X9" OR 40" Dia. X 16"					1
	22 '	(D) 34"x34"X9" OR 40" Dia. X 16"					1
	24 '	(D) 34"x34"X10" OR 40" Dia. X 16"					1
	26 '	(D) 34"x34"X11" OR 40" Dia. X 16"					1
	28 '	(T) 42"x42"X13" OR 48" Dia. X 20"					1
	30 '	(T) 42"x42"X13" OR 48" Dia. X 20"					1
	32 '	(T) 42"x42"X13" OR 48" Dia. X 20"					1
	34 '	(T) 42"x42"X13" OR 48" Dia. X 20"					1
	36 '	(T) 42"x42"X13" OR 48" Dia. X 20"					1
	46 '	(T) 42"x42"X16" OR 48" Dia. X 20"					1
SUPPORTS UNDER MATING OPENING AS CLEARSPANS IN FEET							
PIER SPACING		6.9 '					
PIER CONFIG.		(S) 26"x26"X9" OR 23" Dia.					
SUPPORTS UNDER MATING WALLS- CLEARSPANS IN FEET							
PIER SPACING		5.9 '					
PIER CONFIG.		(S) 26"x26"X9" OR 27" Dia.					

Girder beams construction to be (4) 2X10 #2 SP joists. Splices 4" X 5" MiTek M18 metal plates each side

Chart Key:
(Pier Configuration) Min. footer width (inches) x Min. footer length (inches) x Min. footer depth (inches)
(S)= Single stack block configuration.
(D)= Double stack block configuration.
(T)= Triple stack block configuration.
(DR)=Double stack reinforced & fully grouted configuration.
IE. For 30 psf 180" box with 14' opening:Double stack pier on a 34"x 34" sq. footer 9" deep footing.

APPROVED BY NTA INC. 7/31/2018
Approval of this document does not authorize or approve any deviation or deviations from the requirements of applicable State Laws.
David Richter

30' 1 STORY- W.O ATTIC OFF FRAME BASEMENT & CRAWL With Roof Pitch of 6/12 Min. to 6/12 Max.

NOTES: 1 DESIGNED FOR 100 MPH MAX. WIND SPEED.
2 DESIGNED FOR 2000 PSF MIN. ALLOWABLE SOIL BEARING CAPACITY.
3 & ASCE 7-05 & 2012 NORTH CAROLINA RESIDENTIAL CODE
4 MAX. MATING WALL OPENINGS LISTED IN CHART ASSUME OPENING IN BOTH HALVES. IF ANCHOR IS TIED TO ONLY ONE COLUMN (ONE HALF) THEN HALF THE OPENING SIZE CAN BE USED WHEN LOOKING UP VALUE IN TABLE ABOVE. PIERS SUPPORTS REQUIRED AT EACH SIDE OF DOOR OPENINGS AND ALL EXTERIOR WALL OPENINGS GREATER THAN 4'.
5 WHEN PIER CONFIGURATION IS NOT GIVEN IN CHART THE ACTUAL LOADS EXCEED ALL PREDESIGNED PIERS AND A LOCAL ENGINEER MUST DESIGN THE SUPPORTS FOR THE GIVEN LOADS (- UPLIFT/ + GRAVITY LOADS).
6 ALL PIERS SHALL BE EMBEDDED IN TYPE M OR S MORTAR.
7.Round footers or Round Piles with diameter as required above may be used as alternate to square footing or square footing and block piers.

Model: 7609A6401 (51373)
Customer: Webb
Harnett Co., NC

FILENAME:976I-10.R.K.E.16.3.210(_)

TABLE N - STRUCTURAL STEEL POST AND FOOTER SIZE AT MATING WALL COLUMNS (REF. DETAIL D7)

							Uplift force
GROUND SNOW		30					
MAXIMUM MATING LINE SPAN BETWEEN MATING WALL COLUMN SUPPORTS	4 '	(9k) 26"x26"X11"					0 #
	6 '	(9k) 26"x26"X11"					0 #
	8 '	(9k) 26"x26"X11"					36.0448 #
	10 '	(14k) 32"x32"X13"					167.906 #
	12 '	(14k) 32"x32"X13"					299.767 #
	14 '	(14k) 32"x32"X13"					431.628 #
	16 '	(14k) 32"x32"X13"					563.49 #
	18 '	(14k) 32"x32"X13"					695.351 #
	20 '	(14k) 32"x32"X13"					827.212 #
	22 '	(14k) 32"x32"X13"					959.073 #
	24 '	(20k) 38"x38"X14"					1090.93 #
	26 '	(20k) 38"x38"X14"					1222.8 #
	28 '	(20k) 38"x38"X14"					1354.66 #
	30 '	(20k) 38"x38"X14"					1486.52 #
	32 '	(20k) 38"x38"X14"					1618.38 #
	34 '	(20k) 38"x38"X14"					1750.24 #
	36 '	(20k) 38"x38"X15"					1882.1 #
	46 '	(30k) 48"x48"X17"					2541.41 #
SUPPORTS UNDER MATING OPENING -CLEARSPANS IN FEET							
POST SPACING		6.9 '					
FOOTER SIZE		(9k) 26"x26"X11"					
SUPPORTS UNDER MATING WALLS- CLEARSPANS IN FEET							
POST SPACING		5.9 '					
FOOTER SIZE		(9k) 26"x26"X11"					

Girder beams construction to be (4) 2X10 #2 SP joists. Splices 4" X 5" MiTek M18 metal plates each side

Chart Key:
(Post Load)= Minimum allowable compression rating which post must be rated in kips (1000 lbs.).
(Post Capacity and Footer Size) Min. footer width (inches) x Min. footer length (inches) x Min. footer depth (inches)
Note: Steel piers must have a minimum steel base plate size of 4 inches x 5.5 inches which bears directly on footer sized per chart.
Minimum steel column top plate size of 4"x5.5"for 9000#; 6"x6"for 14000#; 6"x6"for 20000# & 6"x10"for 30000#

Minimum footer Reinforcement (Number of #4 bars each way):

Footer size	# of No. 4 bars	Footer size	# of No. 4 bars
26"x26"	3	38"x38"	5
32"x32"	4	48"x48"	8

APPROVED BY NTA INC. 7/31/2018
Approval of this document does not authorize or approve any deviation or deviations from the requirements of applicable State Laws.
David Richter

30' 1 STORY- W.O ATTIC OFF FRAME BASEMENT & CRAWL With Roof Pitch of 6/12 Min. to 6/12 Max.

NOTES: 1 DESIGNED FOR 100 MPH MAX. WIND SPEED.
2 DESIGNED FOR 2000 PSF MIN. ALLOWABLE SOIL BEARING CAPACITY.
3 & ASCE 7-05 & 2012 NORTH CAROLINA RESIDENTIAL CODE
4 MAX. MATING WALL OPENINGS LISTED IN CHART ASSUME OPENING IN BOTH HALVES. IF ANCHOR IS TIED TO ONLY ONE COLUMN (ONE HALF) THEN HALF THE OPENING SIZE CAN BE USED WHEN LOOKING UP VALUE IN TABLE ABOVE. PIERS SUPPORTS REQUIRED AT EACH SIDE OF DOOR OPENINGS AND ALL EXTERIOR WALL OPENINGS GREATER THAN 4'.
5 WHEN PIER CONFIGURATION IS NOT GIVEN IN CHART THE ACTUAL LOADS EXCEED ALL PREDESIGNED FOOTERS AND A LOCAL ENGINEER MUST DESIGN THE SUPPORTS FOR THE GIVEN LOADS (- UPLIFT/ + GRAVITY LOADS).

Model: 7609A6401 (51373)
Customer: Webb
Harnett Co., NC

FILENAME:976I-10.R.K.E.16.3.210(_)

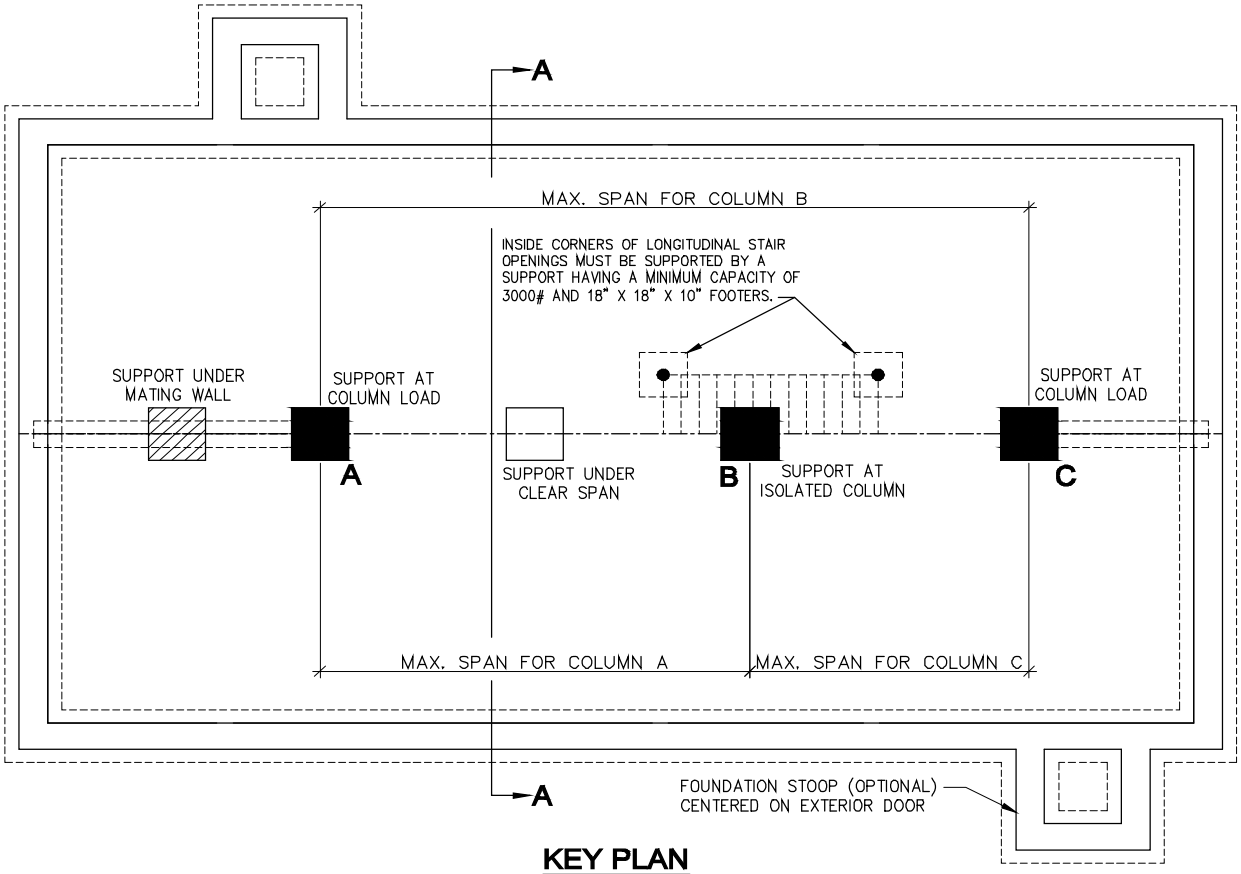

KEY PLAN
OFF-FRAME BASEMENT - 2 SECTION

NOT TO SCALE

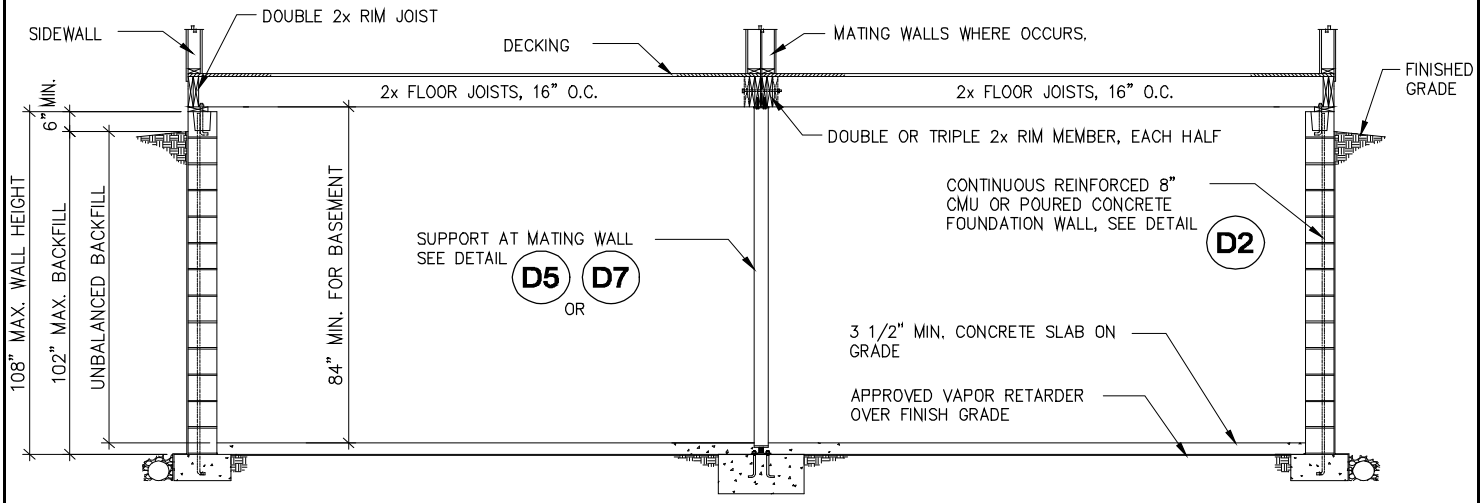

CROSS SECTION A-A

NOTES:
1. MARRIAGE LINE POSTS SHALL SUPPORT THE MARRIAGE WALL, COLUMNS AND STAIR LOADS WHERE OCCURS. REFER TO SPECIFIC FOUNDATION LAYOUT FOR LOCATION INFORMATION.
2. SEE GENERAL NOTES SECTION FOR VENTILATION, DRAINAGE AND OTHER FOUNDATION REQUIREMENTS.

APPROVED BY
NTA INC.
7/31/2018
Approval of this document does not authorize or approve any deviation or deviations from the requirements of applicable State Laws.
David Richter

Model: 7609A6401 (51373)
Customer: Webb
Harnett Co., NC

Clayton home building grou

KEY PLAN 7 - OFF-FRAME / BASEMENT / 2 SECTION

DATE: 05/25/07 | 976I-10.R.K.E.16.3.210(_)

PAGE #:

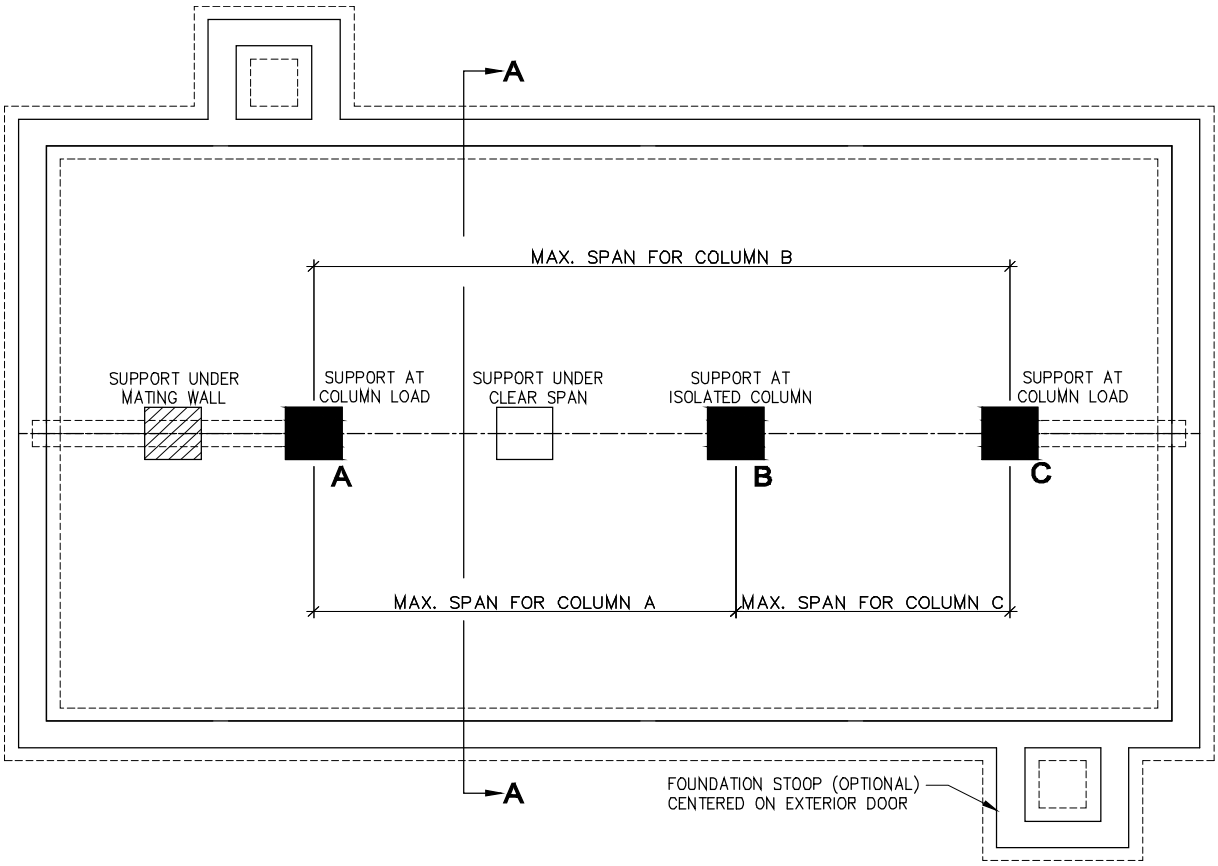

KEY PLAN
OFF-FRAME CRAWL SPACE - 2 SECTION

NOT TO SCALE

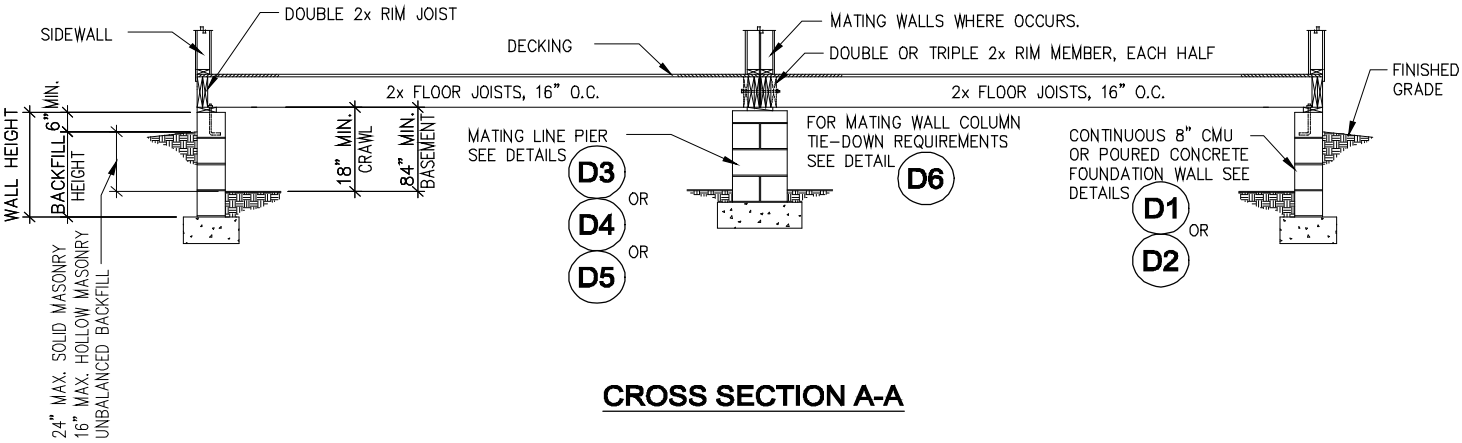

CROSS SECTION A-A

NOTES:
1. MARRIAGE LINE POSTS SHALL SUPPORT THE MARRIAGE WALL, COLUMNS AND STAIR LOADS WHERE OCCURS. REFER TO SPECIFIC FOUNDATION LAYOUT FOR LOCATION INFORMATION.
2. SEE GENERAL NOTES SECTION FOR VENTILATION, DRAINAGE AND OTHER FOUNDATION REQUIREMENTS.

APPROVED BY
NTA INC.
7/31/2018
Approval of this document does not authorize or approve any deviation or deviations from the requirements of applicable State Laws.
David Richter

Model: 7609A6401 (51373)
Customer: Webb
Harnett Co., NC

Clayton home building group

KEY PLAN 8 - OFF-FRAME / CRAWL SPACE / 2 SECTION

DATE: 05/25/07 | 976I-10.R.K.E.16.3.210(_)

PAGE #:

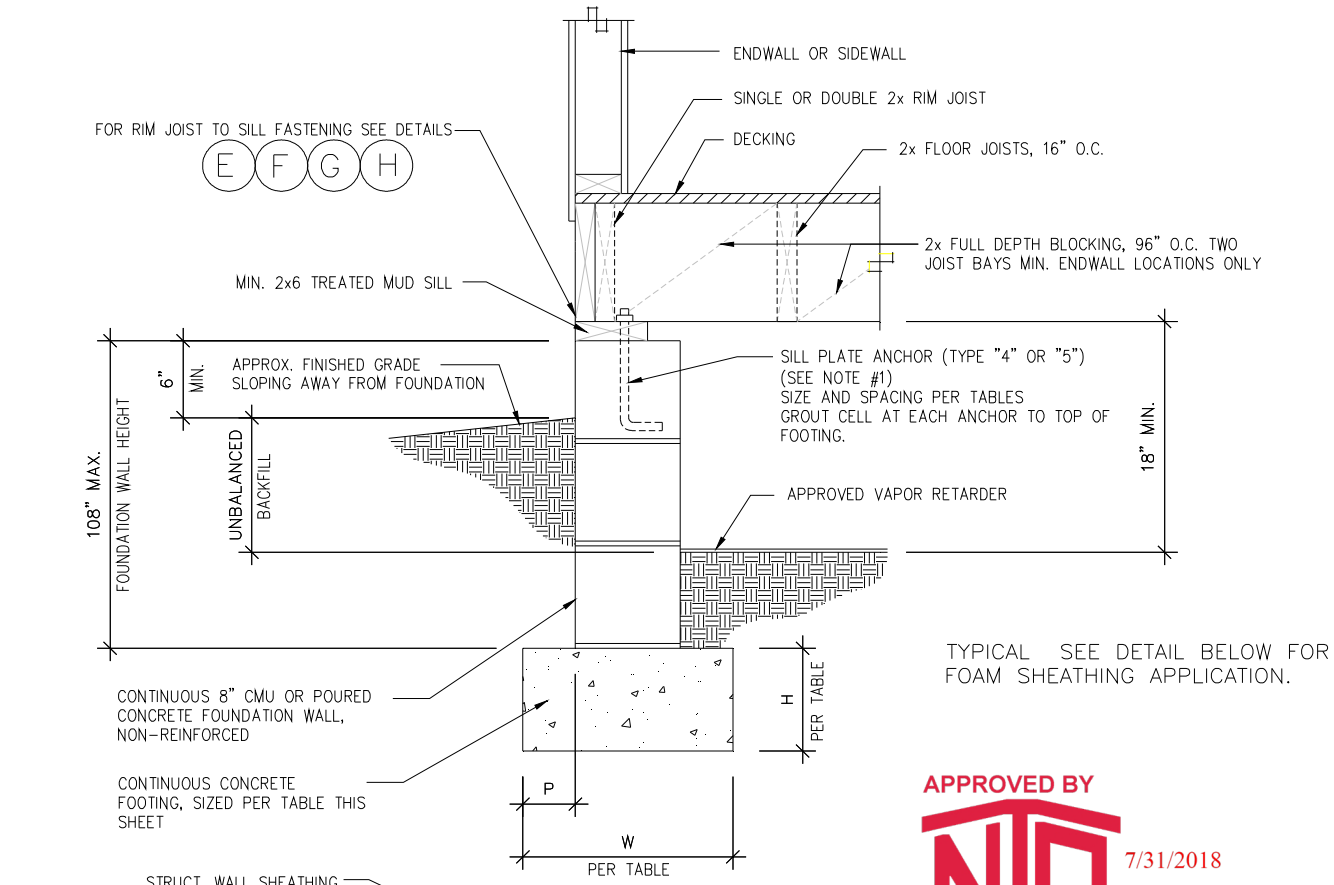

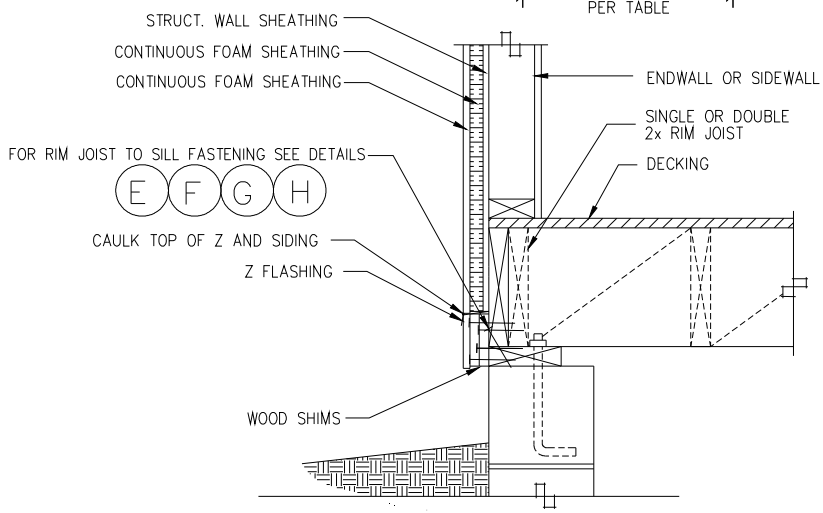

APPROVED BY
NTA INC.
7/31/2018
Approval of this document does not authorize or approve any deviation or deviations from the requirements of applicable State Laws.
David Richter

FOOTER SIZE TABLE

MAX. GROUND SNOW	MIN. FOOTER SIZE		
	WIDTH W	DEPTH H	
		Crawl	Basement
30 PSF	16 "	6"	6"

NON-REINFORCED PERIMETER FOUNDATION WALL
BASEMENT OR CRAWLSPACE
MAX. 100 MPH WIND SPEED & SEISMIC ZONE C
30 ' WIDE 1 STORY- W.O ATTIC

NOTES:

1) **MUD SILL TO FOUNDATION ANCHORS:**
   TYPE 4: 1/2" DIAMETER STEEL ANCHOR BOLTS EMBEDDED 7" MIN. INTO CONCRETE FOUNDATION WALL OR CLOSE CELL CMU WITH 2"x2"x1/8" WASHERS AND NUTS. BOLT HEADS SHALL NOT BE RECESSED INTO SINGLE SILL PLATE.
   TYPE 5: SIMPSON MAB OR MAS MUD SILL ANCHOR INSTALLED PER INSTALLATION INSTRUCTIONS.
2) **RIM TO MUD SILL FASTENING AND SILL TO FOUNDATION ANCHOR SPACING SHALL BE THE MINIMUM OF:**
   a) **SPACING GIVEN IN APPLICABLE TABLES FOR UNIT CONFIGURATION AND WIND SPEED.**
   b) **SPACING GIVEN IN BACKFILL/ SIDEWALL TABLES FOR GIVEN UNIT CONFIGURATION, MAXIMUM BASEMENT WALL HEIGHT, BACKFILL DEPTH, AND LOCAL SOIL CLASSIFICATION.**
3) **DISTANCE FROM EDGE OF FOOTER TO FACE OF FOUNDATION WALL (P) SHALL NOT BE LESS THAN 2" AND SHALL NOT EXCEED THE FOOTER THICKNESS (H).**
4) **2000 PSF MIN. ALLOWABLE SOIL BEARING CAPACITY.**

Model: 7609A6401 (51373) Customer: Webb
Harnett Co., NC

Clayton home building group

NON-REINFORCED PERIMETER FOUNDATION WALL - DETAIL - D1

DATE: 07/17/07 | 976I-10.R.K.E.16.3.210(_)

PAGE #:

APPROVED BY
NTA INC.
7/31/2018
Approval of this document does not authorize or approve any deviation or deviations from the requirements of applicable State Laws.
David Richter

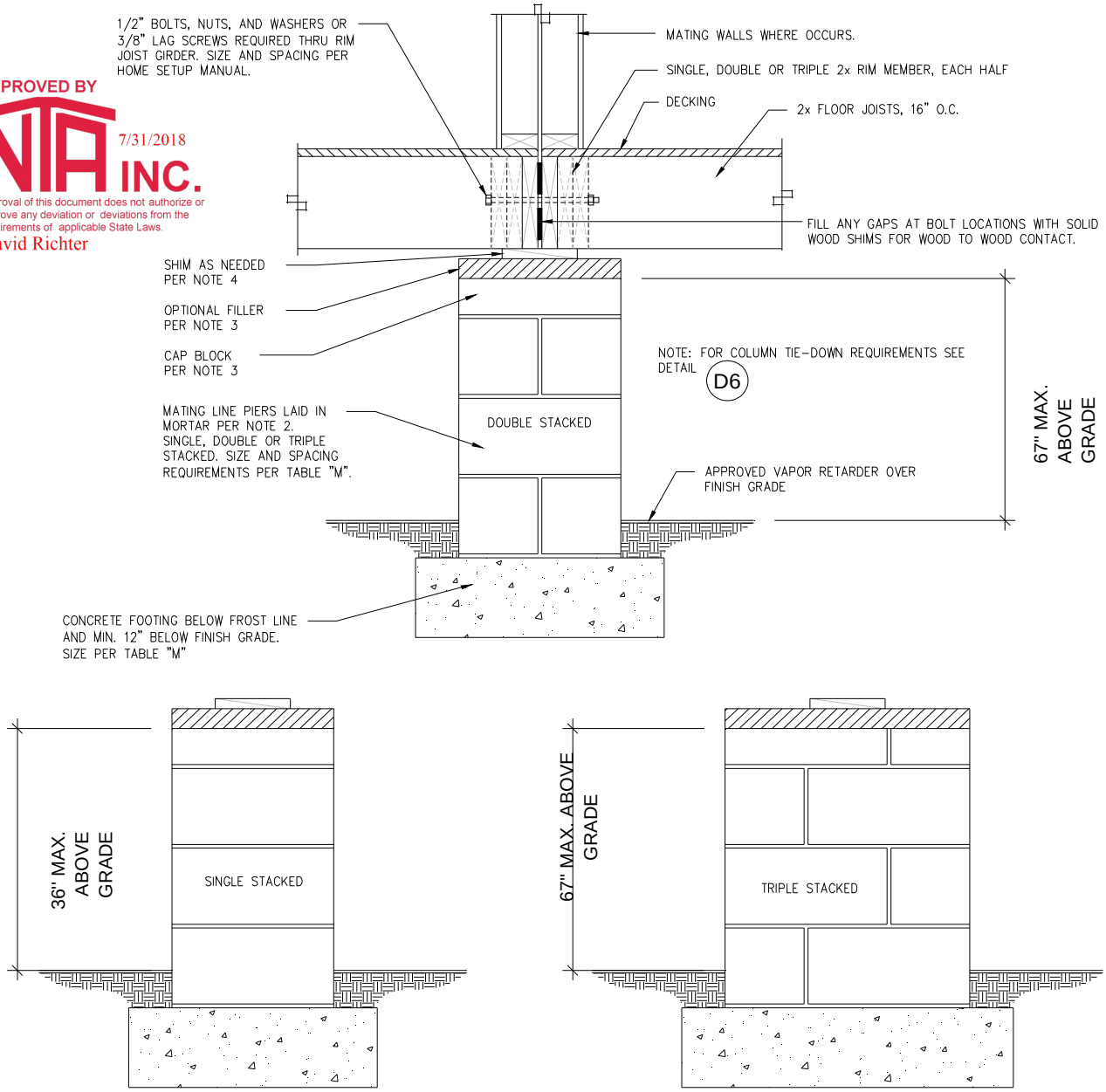

NON-REINFORCED MATING WALL OR COLUMN SUPPORT PIER
CRAWL SPACE ONLY

Model: 7609A6401 (51373) Customer: Webb

NOTES:

1. FOOTINGS MUST BE LEVEL IN ALL DIRECTIONS. PIERS ARE TO BE PLACED CENTERED ON THE FOOTING SO THAT THE FOOTING PROJECTION FROM THE PIER IS EQUAL FROM SIDE-TO-SIDE AND FRONT-TO-BACK. PIERS MUST BE LEVEL VERTICALLY ON ALL SIDES AND SQUARE WITH THE FOOTING.

2. CONCRETE BLOCKS FOR PIERS ARE 8" x 16" x 8" NOMINAL SIZE, HOLLOW CELL LOAD BEARING CMU's MANUFACTURED IN CONFORMANCE WITH ASTM C90, GRADE "N". OPEN CELLS ARE ALIGNED VERTICALLY.THE PIERS SHALL BE LAID IN RUNNING BOND WITH TYPE M OR S MORTAR OR APPROVED ALTERNATE (SEE GENERAL NOTE 12). SINGLE STACKED BLOCKS TO BE LAID WITH LONG SIDE PERPENDICULAR TO MATE LINE RIM JOISTS. DOUBLE STACKED BLOCK IS LAID WITH EACH LAYER AT A RIGHT ANGLE TO THE PREVIOUS LAYER. THE TOP COURSE OR THE CAP BLOCKS SHALL BE PERPENDICULAR TO THE MATE LINE RIM JOISTS.

3. CAP BLOCKS SHALL BE 4" SOLID CONCRETE OR MASONRY BLOCK. 2x NOMINAL HARDWOOD OR 1/2" STEEL MAY BE USED AS A CAP BLOCK IF THE TOP COURSE OF THE PIER IS SOLID MASONRY OR CONCRETE OR IF THE TOP COURSE OF A HOLLOW PIER IS FILLED WITH CONCRETE OR GROUT. OPTIONAL FILLER MATERIAL MAY BE 2x NOMINAL HARDWOOD OR 2" OR 4' NOMINAL SOLID CONCRETE BLOCK. ALL CAPS AND FILLER SHALL BE OF THE SAME NOMINAL DIMENSIONS AS THE PIERS THEY REST UPON. INDIVIDUAL LENGTHS OF CAP BLOCKS AND FILLER SHALL BE PERPENDICULAR TO THE MATE LINE RIM JOISTS.

4. SHIMS SHALL BE OF HARDWOOD, AT LEAST 3 1/2" WIDE AND 6" LONG AND ARE NOT TO EXCEED ONE INCH IN THICKNESS. SHIMS SHALL BE PERPENDICULAR TO MATE LINE, FITTED AND DRIVEN TIGHT BETWEEN CAP BLOCKS OR FILLER AND MATE LINE RIM JOISTS.

5. MARRIAGE LINE PIERS SHALL SUPPORT THE MARRIAGE WALL AND COLUMNS WHERE OCCURS PER MODEL SPECIFIC FOUNDATION PLAN. MAXIMUM PIER SPACING PER TABLE "M".

6. SEE GENERAL NOTES FOR DRAINAGE AND OTHER FOUNDATION REQUIREMENTS.

Clayton home building group

NON-REINFORCED MATING WALL COLUMN SUPPORT PIER - CRAWLSPACE ONLY - DETAIL - D3

DATE: 06/13/07 | 976I-10.R.K.E.16.3.210(_)

PAGE #: Page 16 OF 31

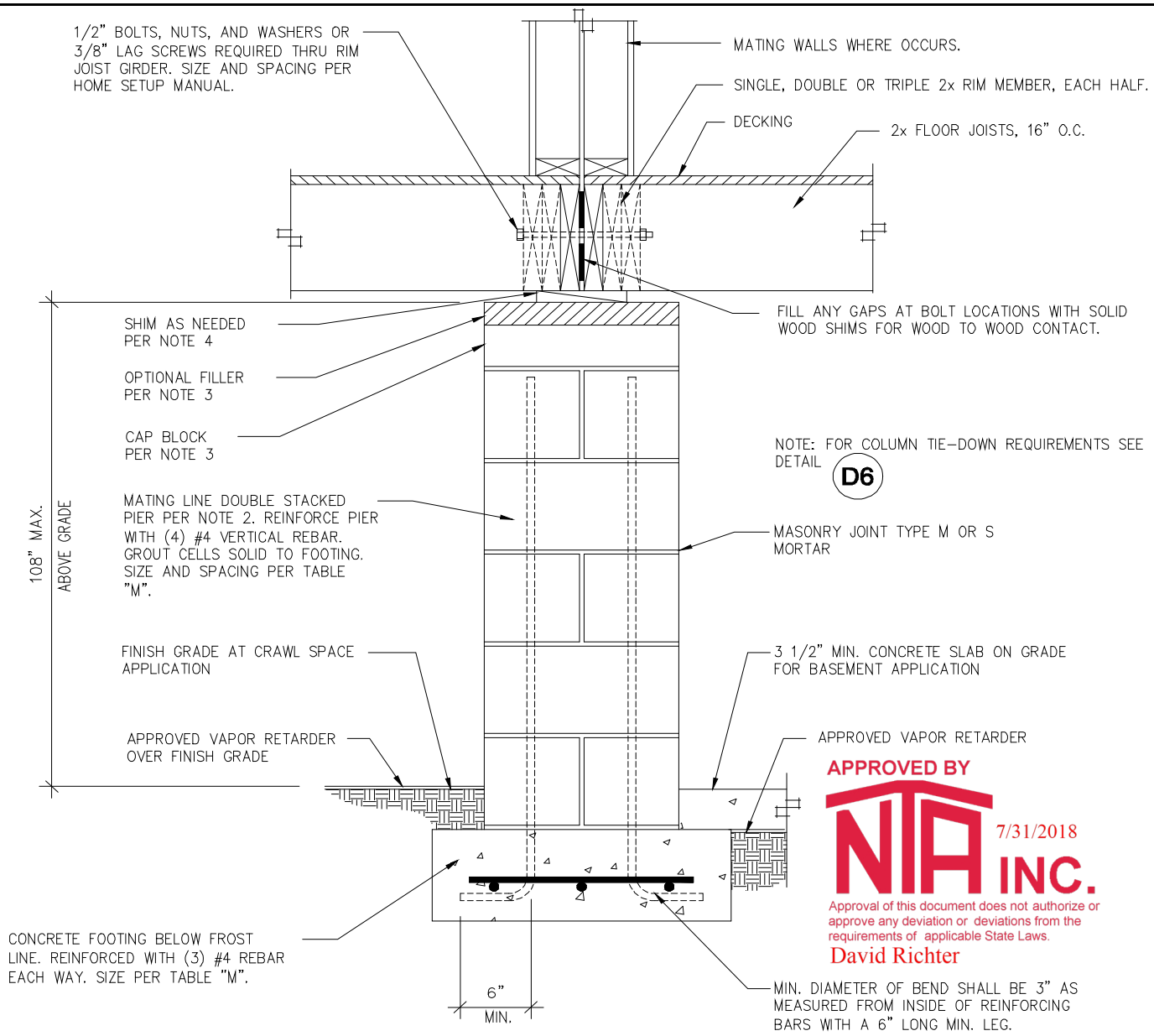

APPROVED BY NTA INC. 7/31/2018

Approval of this document does not authorize or approve any deviation or deviations from the requirements of applicable State Laws.

David Richter

REINFORCED MATING WALL OR COLUMN SUPPORT PIER BASEMENT OR CRAWL SPACE (PIER SPACING AND FOOTER SIZE PER TABLE M)

Model: 7609A6401 (51373)

Customer: Webb Harnett Co., NC

NOTES:

1. FOOTINGS MUST BE LEVEL IN ALL DIRECTIONS. PIERS ARE TO BE PLACED CENTERED ON THE FOOTING SO THAT THE FOOTING PROJECTION FROM THE PIER IS EQUAL FROM SIDE-TO-SIDE AND FRONT-TO-BACK. PIERS MUST BE LEVEL VERTICALLY ON ALL SIDES AND SQUARE WITH THE FOOTING.
2. CONCRETE BLOCKS FOR PIERS ARE 8" x 16" x 8" NOMINAL SIZE, HOLLOW CELL LOAD BEARING CMU's MANUFACTURED IN CONFORMANCE WITH ASTM C90, GRADE "N". OPEN CELLS ARE ALIGNED VERTICALLY.THE PIERS SHALL BE LAID IN RUNNING BOND WITH TYPE M OR S MORTAR. SINGLE STACKED BLOCKS TO BE LAID WITH LONG SIDE PERPENDICULAR TO MATE LINE RIM JOISTS. DOUBLE STACKED BLOCK IS LAID WITH EACH LAYER AT A RIGHT ANGLE TO THE PREVIOUS LAYER. THE TOP COURSE OR THE CAP BLOCKS SHALL BE PERPENDICULAR TO THE MATE LINE RIM JOISTS.
3. CAP BLOCKS SHALL BE 4" SOLID CONCRETE OR MASONRY BLOCK. 2x NOMINAL HARDWOOD OR 1/2" STEEL MAY BE USED AS A CAP BLOCK IF THE TOP COURSE OF THE PIER IS SOLID MASONRY OR CONCRETE OR IF THE TOP COURSE OF A HOLLOW PIER IS FILLED WITH CONCRETE OR GROUT. OPTIONAL FILLER MATERIAL MAY BE 2x NOMINAL HARDWOOD OR 2" OR 4' NOMINAL SOLID CONCRETE BLOCK. ALL CAPS AND FILLER SHALL BE OF THE SAME NOMINAL DIMENSIONS AS THE PIERS THEY REST UPON. INDIVIDUAL LENGTHS OF CAP BLOCKS AND FILLER SHALL BE PERPENDICULAR TO THE MATE LINE RIM JOISTS.
4. SHIMS SHALL BE OF HARDWOOD, AT LEAST 3 1/2" WIDE AND 6" LONG AND ARE NOT TO EXCEED ONE INCH IN THICKNESS. SHIMS SHALL BE PERPENDICULAR TO MATE LINE, FITTED AND DRIVEN TIGHT BETWEEN CAP BLOCKS OR FILLER AND MATE LINE RIM JOISTS.
5. MARRIAGE LINE PIERS SHALL SUPPORT THE MARRIAGE WALL AND COLUMNS WHERE OCCURS PER MODEL SPECIFIC FOUNDATION PLAN. MAXIMUM PIER SPACING PER TABLE "M".
6. SEE GENERAL NOTES FOR DRAINAGE AND OTHER FOUNDATION REQUIREMENTS.

Clayton home building group

REINFORCED MATING WALL OR COLUMN SUPPORT PIER - BASEMENT OR CRAWL SPACE
DETAIL - D5

DATE: 06/04/07

976I-10.R.K.E.16.3.210(_)

PAGE #:

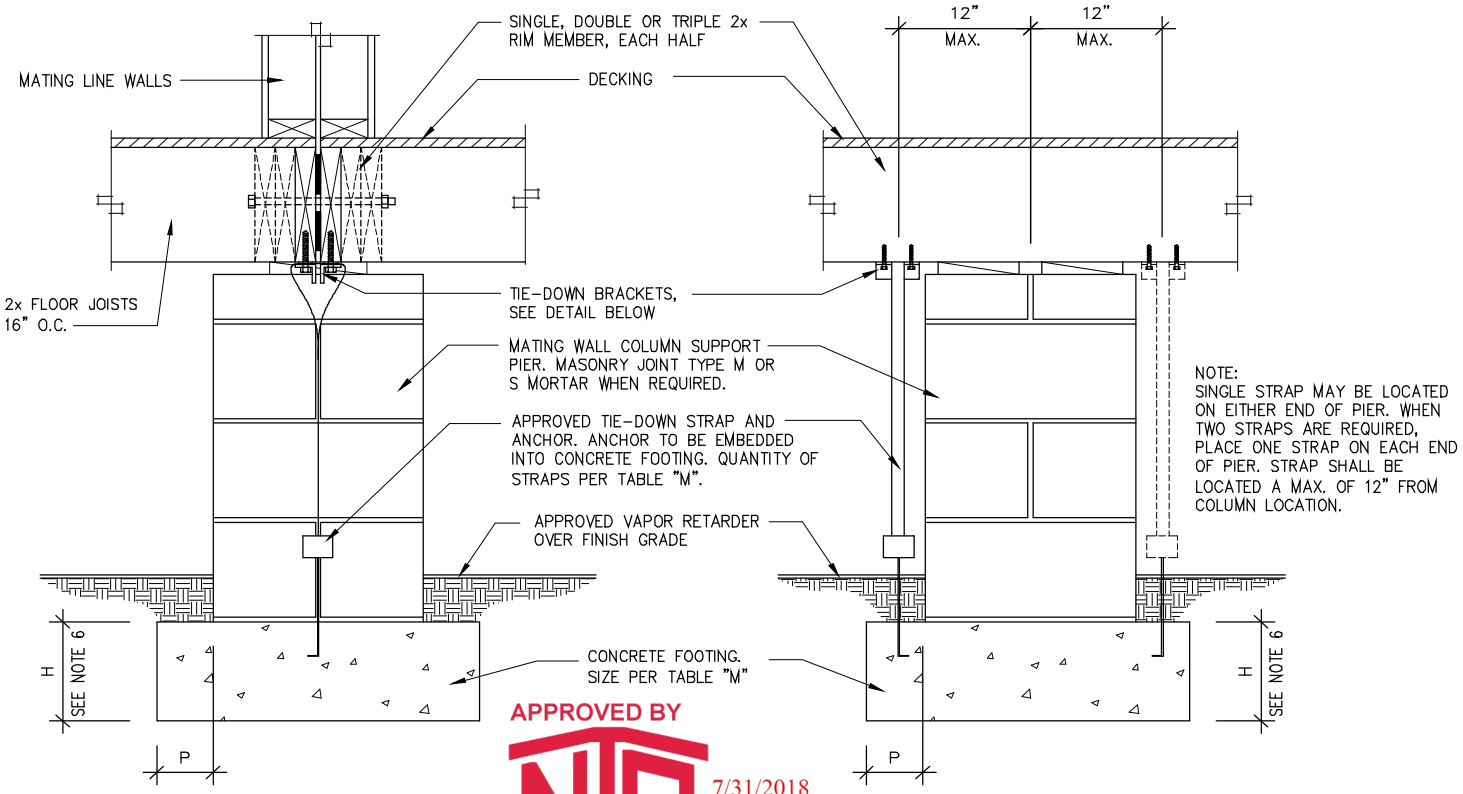

APPROVED BY NTA INC. 7/31/2018

Approval of this document does not authorize or approve any deviation or deviations from the requirements of applicable State Laws.

David Richter

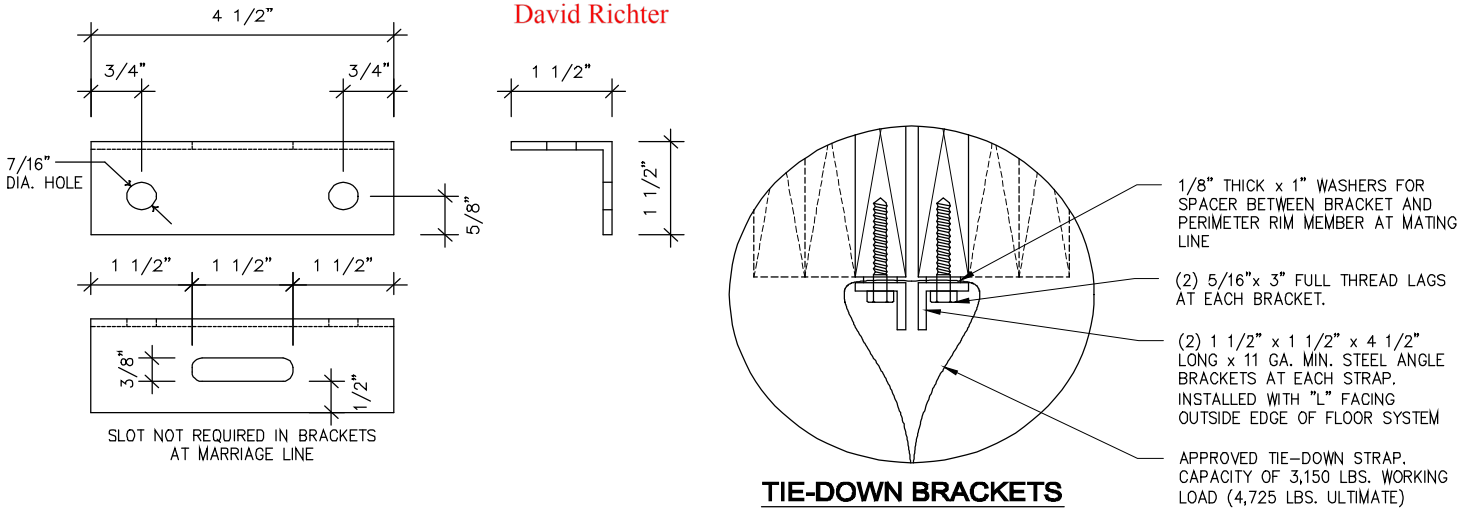

MATING WALL COLUMN TIE DOWN

NOTES:

1. ALL MARRIAGE WALL COLUMN LOCATIONS WITH OPENINGS 4 FEET OR GREATER MAY REQUIRE THE INSTALLATION OF COLUMN BRACKETS AND TIE-DOWNS. SEE TABLE "M" FOR REQUIREMENTS.
2. EACH BRACKET IS RATED FOR AN ALLOWABLE WORKING LOAD OF 1,719 LBS.
3. THE CAPACITY OF BOTH THE TIE-DOWN STRAP AND ANCHOR MUST BE 3,150 LBS. WORKING LOAD (4,725 LBS. ULTIMATE)
4. USE A RADIUS CLIP FOR ALL BRACKET APPLICATIONS BY THREADING A PIECE OF STRAP OVER THE BRACKETS BEFORE LOOPING THE TIE-DOWN STRAP AROUND THE BRACKET.
5. GROUND ANCHORS WHICH ARE LISTED FOR THE REQUIRED CAPACITY ABOVE MAY BE USED IN LIEU OF CONCRETE ANCHOR.
6. DISTANCE FROM EDGE OF FOOTING TO FACE OF FOUNDATION WALL (P) SHALL NOT BE LESS THAN 2" AND SHALL NOT EXCEED THE FOOTING THICKNESS (H). FOOTING THICKNESS MAY BE 10" IF GROUND ANCHORS WITH AN UPLIFT CAPACITY OF 3,150 LBS. ARE USED IN PLACE OF CONCRETE ANCHORS.
7. FOOTING SIZES PER TABLE "M" HAVE BEEN DESIGNED ASSUMING CONCRETE ANCHORS WILL BE UTILIZED. IF GROUND ANCHORS ARE UTILIZED TO TRANSMIT UPLIFT INTO GROUND SOIL, THE DEPTH OF THE FOOTING MAY BE REDUCED TO (P). WHERE (P) IS EQUAL TO THE GREATEST DISTANCE FROM EDGE OF FOOTING TO EDGE OF PIER. MINIMUM DEPTH IS 9".

Clayton home building group

MATING WALL COLUMN TIE DOWN - DETAIL - D6

DATE: 06/29/07

976I-10.R.K.E.16.3.210(_)

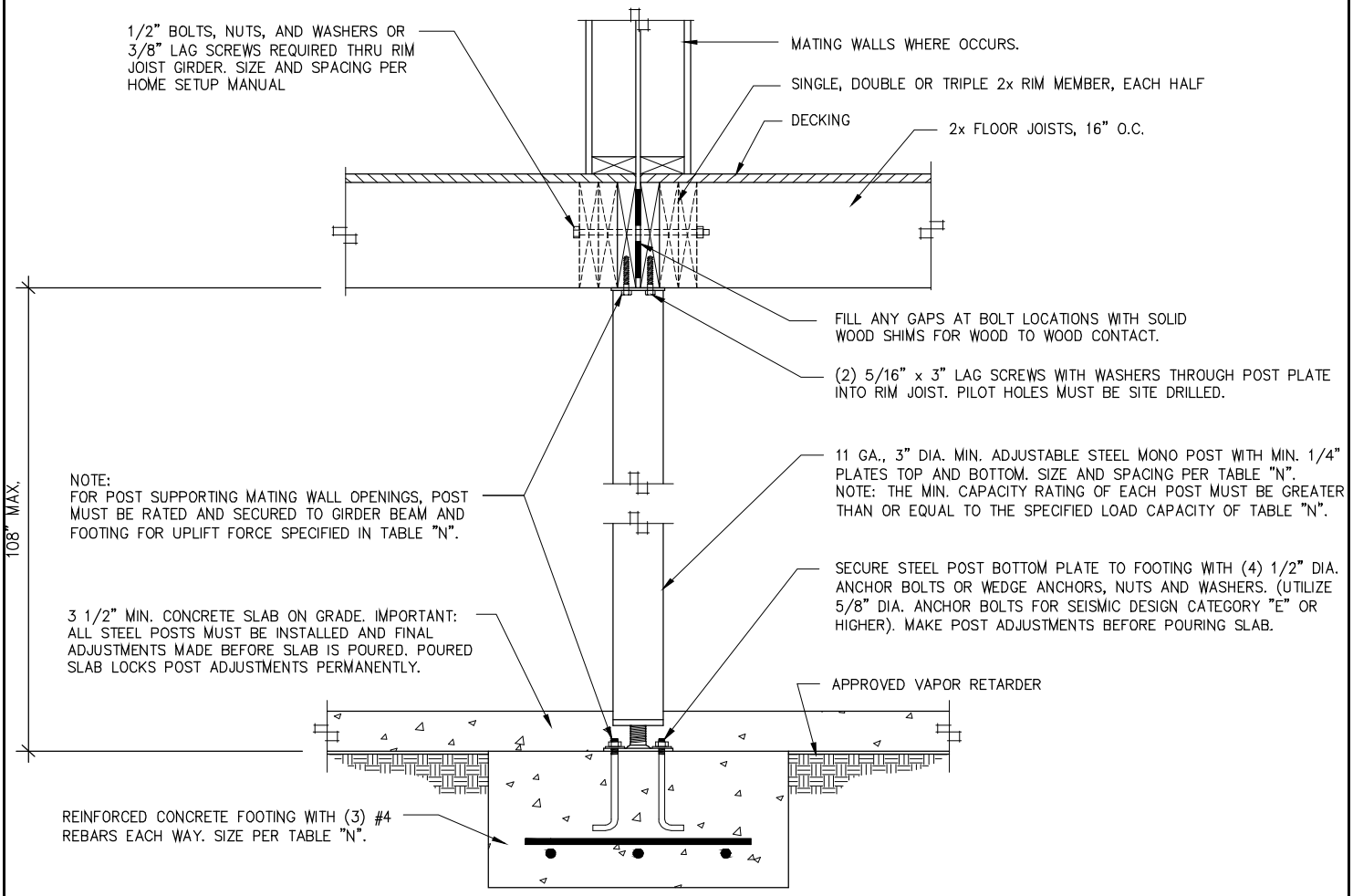

ALTERNATE POST INSTALLATION: STEEL POSTS MAY BE INSTALLED WITH SCREW JACK ASSEMBLY AT THE TOP OR BOTTOM. STEEL POSTS INSTALLED WITHOUT THE SCREW JACK ASSEMBLY AT THE BOTTOM AND ENCASED IN CONCRETE ARE SUBJECT TO LOAD REDUCTIONS. VERIFY THE CAPACITY OF THE STEEL POST BASED ON THE INSTALLATION METHOD PRIOR TO INSTALLATION OF THE POST.

APPROVED BY
NTA INC.
7/31/2018
Approval of this document does not authorize or approve any deviation or deviations from the requirements of applicable State Laws.
David Richter

ADJUSTABLE STEEL COLUMN POST BASEMENT OR CRAWL SPACE (MAXIMUM POST SPACING PER TABLE N)

NOTES:

1. FOOTINGS MUST BE LEVEL IN ALL DIRECTIONS. STEEL POSTS ARE TO BE PLACED CENTERED ON THE FOOTING SO THAT THE FOOTING PROJECTION FROM THE POST IS EQUAL FROM SIDE-TO-SIDE AND FRONT-TO-BACK. COLUMN POSTS MUST BE LEVEL VERTICALLY ON ALL SIDES AND SQUARE WITH THE FOOTING.

2. MARRIAGE LINE STEEL POSTS SHALL SUPPORT THE MARRIAGE WALL AND COLUMNS WHERE OCCURS PER

3. SEE GENERAL NOTES FOR DRAINAGE AND OTHER FOUNDATION REQUIREMENTS.

Model: 7609A6401 (51373)
Customer: Webb Harnett Co., NC

Clayton home building group

ADJUSTABLE STEEL COLUMN POST - BASEMENT OR CRAWL SPACE - DETAIL - D7

DATE: 06/08/07 | 976I-10.R.K.E.16.3.210(_)

PAGE #:

APPROVED BY
NTA INC.
7/31/2018
Approval of this document does not authorize or approve any deviation or deviations from the requirements of applicable State Laws.
David Richter

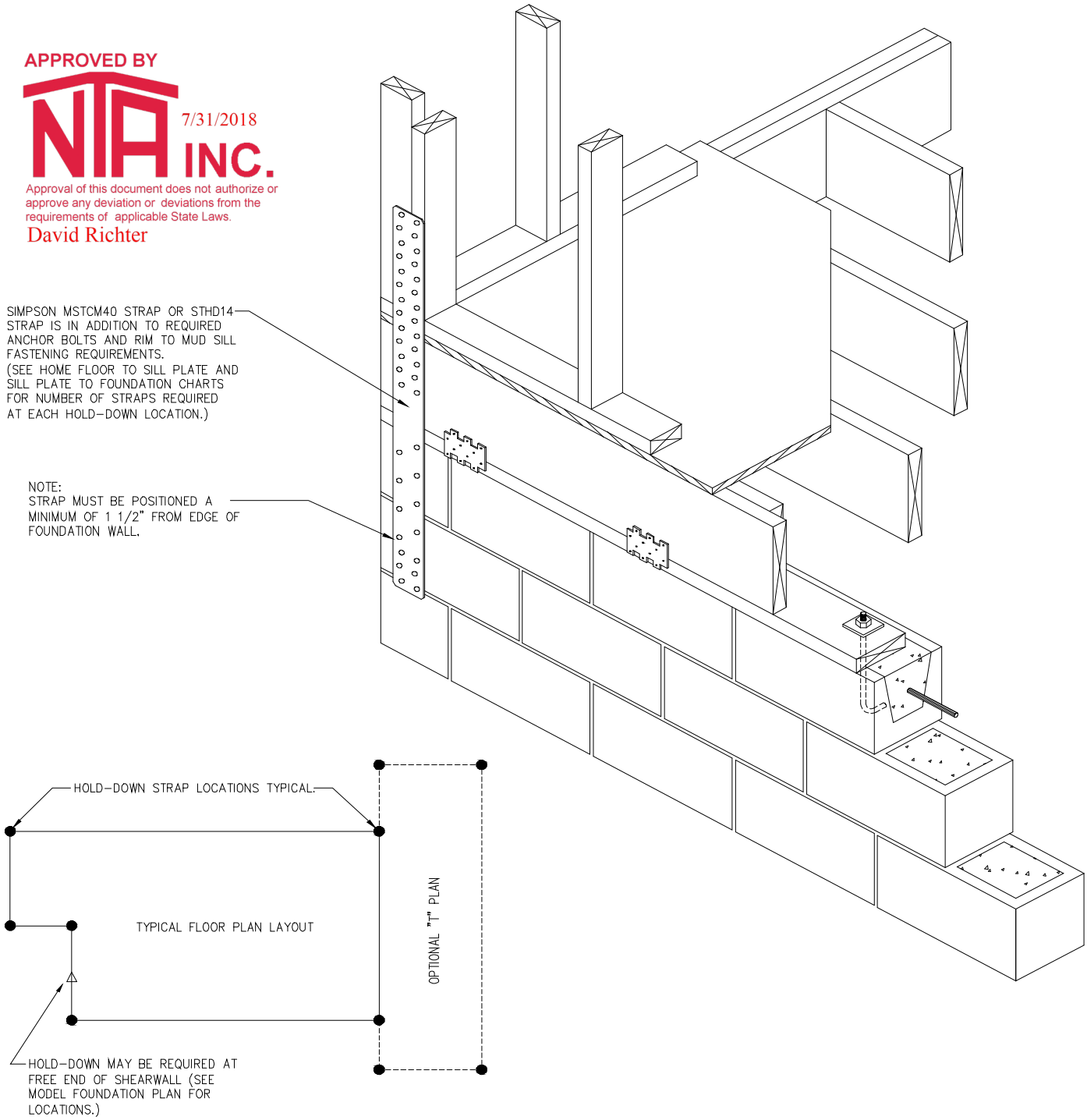

SHEARWALL FOUNDATION HOLD-DOWN

Model: 7609A6401 (51373) Customer: Webb Harnett Co., NC

NOTES:

1. **WHERE REQUIRED AT FREE-END HOLD-DOWNS (AS LOCATED ON THE FOUNDATION LAYOUT) OR AT BUILDING CORNERS PER THE FASTENING TABLES INCLUDED WITHIN THIS FOUNDATION DESIGN PACKAGE, THE FOUNDATION HOLD-DOWN STRAPS ARE THE RESPONSIBILITY OF OTHERS AND ARE NOT PROVIDED BY CLAYTON HOME BUILDING GROUP OR SUBSIDIARIES.**
2. **SIMPSON MSTCM40 SHALL BE FASTENED TO WALL STUD WITH (26) 16d NAILS AND TO FOUNDATION WALL WITH (14) 1/4" x 2 1/4" TITAN SCREWS.**
3. **SIMPSON MSTCM40 OR STHD14 STRAP MAY BE PLACED ON ENDWALL OR SIDEWALL. MINIMUM EDGE DISTANCE OF TITAN SCREW TO CONCRETE OR MASONRY BLOCK CORNER OF 1 1/2" MUST BE MAINTAINED.**
4. **SIMPSON MSTCM40 STRAP IS IN ADDITION TO THE REQUIRED ANCHOR BOLTS AND RIM TO MUD SILL FASTENING REQUIREMENTS.**
5. **SIMPSON STHD14 STRAP (POURED WALLS) MUST BE FASTENED TO WALL STUD WITH (38) .148X 3 1/4" NAILS.)**
6. **DESIGN STRAP CAPACITY: MSTCM40=4250# AND STHD14= 5025#**

Clayton home building group

SHEARWALL FOUNDATION HOLD-DOWN - DETAIL - D18

DATE: 06/13/07 | 976I-10.R.K.E.16.3.210(_)

PAGE #: Page 20 OF 31

APPROVED BY

NTA INC.

7/31/2018

Approval of this document does not authorize or approve any deviation or deviations from the requirements of applicable State Laws.

David Richter

WHEN FASTENING TABLES WITH H PLATES ARE USED SIMPSON LTP4 SHALL BE INSTALLED PER DETAIL H. TO BOTH BOTTOM MUD SILL TO UPPER MUD SILL & TOP MUD SILL TO RIM JOIST. SPACING PER HOME FLOOR TO SILL PLATE & SILL WITH H PLATE TABLES.

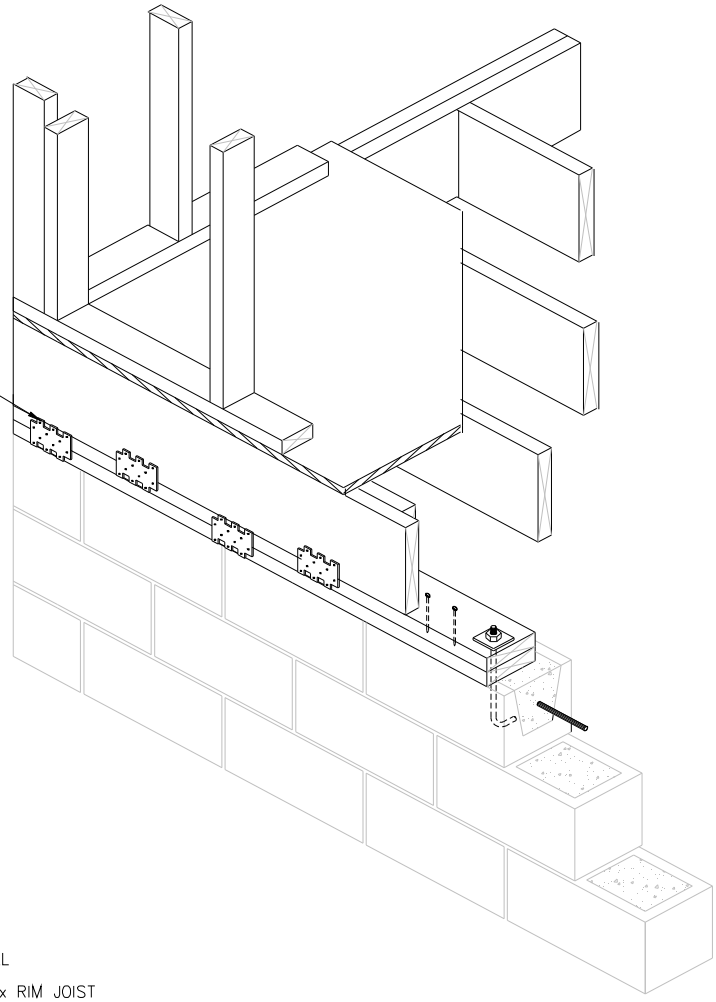

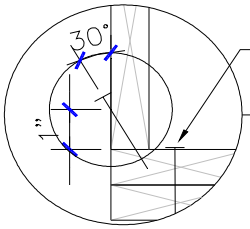

FASTEN UPPER TOP PLATE TO BOTTOM PLATE WITH 8D (.131 x 3") NAILS SPACED PER TYPE E FASTENER TYPE SPACING FOR RIM TO SILL

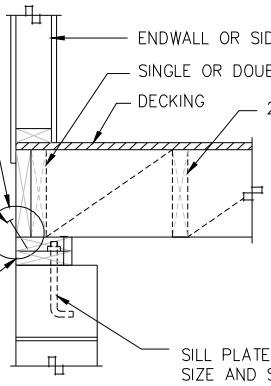

ENDWALL OR SIDEWALL

SINGLE OR DOUBLE 2x RIM JOIST

DECKING

2x FLOOR JOISTS, 16" O.C.

FASTEN RIM JOIST TO SILL WITH 10D (.148 x 3") CORROSION RESISTANT NAILS. ON CENTER SPACING OF FASTENER TYPE "E" IN TABLES. NOTE: IF SPACING REQUIRES ADDITIONAL TYPE "H" PLATE CONNECTORS, SEE DETAIL ABOVE AND DETAIL H

SILL PLATE ANCHOR (TYPE "4") SIZE AND SPACING PER TABLES

MIN. 2x6 TREATED MUD SILLS TOP PLATE ONLY MAY BE NOTCHED OR COUNTER SUNK. TO RECEIVE NUTS/ WASHERS.

DOUBLE MUD SILL OPTION

Model: 7609A6401 (51373)

Customer: Webb

Harnett Co., NC

NOTES:

1. **MUD SILL TO FOUNDATION ANCHORS:**
   TYPE 4:1/2" DIAMETER STEEL ANCHOR BOLTS EMBEDDED 7" MIN. INTO CONCRETE FOUNDATION WALL OR CLOSE CELL CMU WITH 2"x2"x1/8" WASHERS AND NUTS. BOLT HEADS SHALL NOT BE RECESSED INTO BOTTOM MUD SILL PLATE.
2. **UPPER MUD SILL MUST BE FASTENED TO LOWER MUD SILL WITH .131"X3" NAILS SPACED PER RIM JOIST TO MUD SILL SPACING TABLE FOR TYPE E FASTENERS.**
4. **WHEN FASTENING TABLES WITH H PLATES ARE USED, SIMPSON LPT4 PLATES MUST BE INSTALLED FROM LOWER MUD SILL TO UPPER MUD SILL AND FROM UPPER MUD SILL TO RIM JOIST PER FASTENING SPACED PER RIM TO MUD SILL SPACING TABLES.**

Clayton home building group

DOUBLE MUD SILL FOUNDATION WALL DETAIL - D34

DATE: 06/04/07

I-10.R.CC.E.40.0.210

PAGE #:

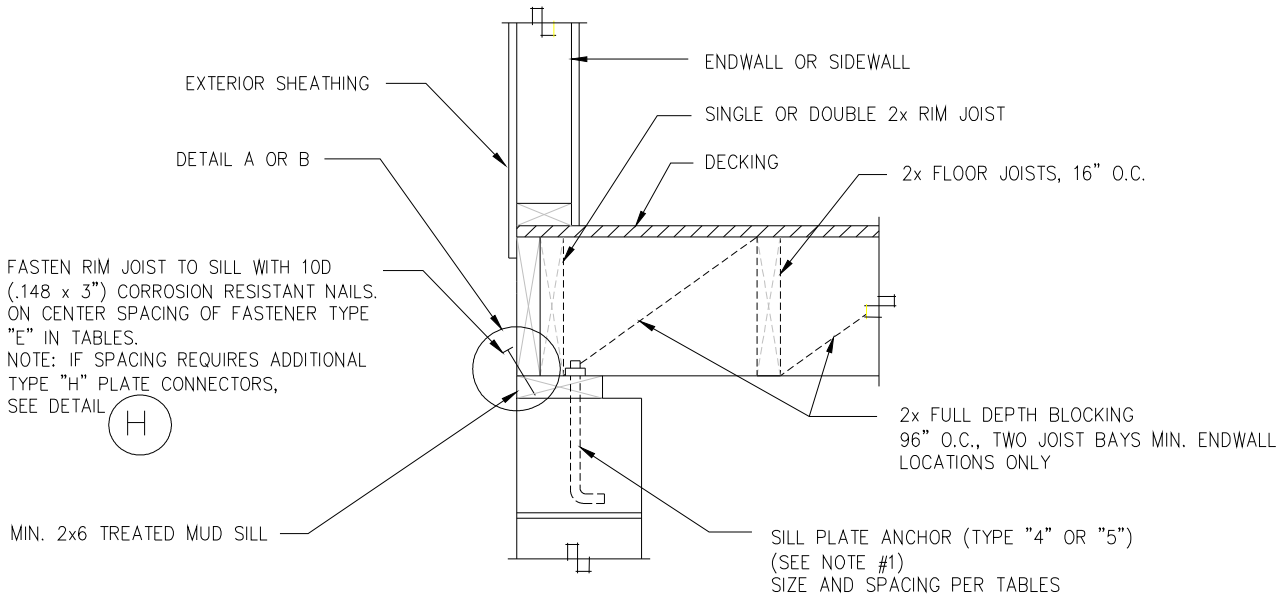

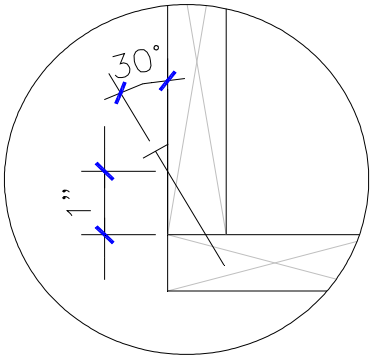

APPROVED BY
NTA INC.
7/31/2018
Approval of this document does not authorize or approve any deviation or deviations from the requirements of applicable State Laws.
David Richter

ALTERNATE FASTENER:

THE FOLLOWING ALTERNATE FASTENERS MAY BE USED WHEN SPACING IN CHART IS MULTIPLIED BY THE FOLLOWING FASTENER MULTIPLIER.

8D (.131 x 3") NAIL = .82
16D (.162 x 3 1/2") NAIL = 1.2
#8 x 3" WOOD SCREW = .78

DETAIL A- DIRECT RIM TO SILL FASTENING

FASTENED THRU $\frac{7}{16}$" MAX. EXTERIOR SHEATHING

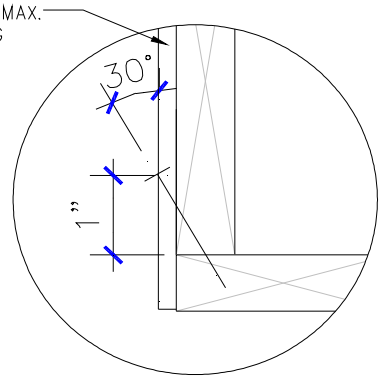

ALTERNATE FASTENER:

FASTENERS MAY BE INSTALLED THROUGH $\frac{7}{16}$" MAXIMUM THICK WALL SHEATHING WHEN SPACING IN CHARTS ARE REDUCED BY MULTIPLYING BY THE FOLLOW:
10d (.148"X3") NAIL = .68
8D (.131 x 3") NAIL = .55
16D (.162 x 3 1/2") NAIL = .816
#8 x 3" WOOD SCREW = .53

DETAIL B- THRU SHEATHING RIM TO SILL FASTENING

FLOOR TO SILL PLATE FASTENING -TYPE "E" -ENDWALL OR SIDEWALL

NOTES:

1) **MUD SILL TO FOUNDATION ANCHORS:**
   TYPE 4:DIAMETER STEEL ANCHOR BOLTS EMBEDDED 7" MIN. INTO CONCRETE FOUNDATION WALL OR CLOSE CELL CMU WITH WASHERS AND NUTS. BOLT HEADS SHALL NOT BE RECESSED INTO SINGLE SILL PLATE.
   TYPE 5: SIMPSON MAB OR MASA MUD SILL ANCHOR INSTALLED PER INSTALLATION INSTRUCTIONS
2) **RIM TO MUD SILL FASTENING AND SILL TO FOUNDATION ANCHOR SPACING SHALL BE THE** MINIMUM OF:
   a) **SPACING GIVEN IN APPLICABLE TABLES FOR UNIT CONFIGURATION AND WIND SPEED.**
   b) **SPACING GIVEN IN BACKFILL/ SIDEWALL TABLES FOR GIVEN UNIT CONFIGURATION, MAXIMUM BASEMENT WALL HEIGHT, BACKFILL DEPTH, AND LOCAL SOIL** CLASSIFICATION.

Model: 7609A6401 (51373)
Customer: Webb Harnett Co., NC

Clayton home building group

FLOOR TO SILL PLATE FASTENING - ENDWALL OR SIDEWALL - DETAIL - E

DATE: 04/17/07 | 976I-10.R.K.E.16.3.210(_)

PAGE #:

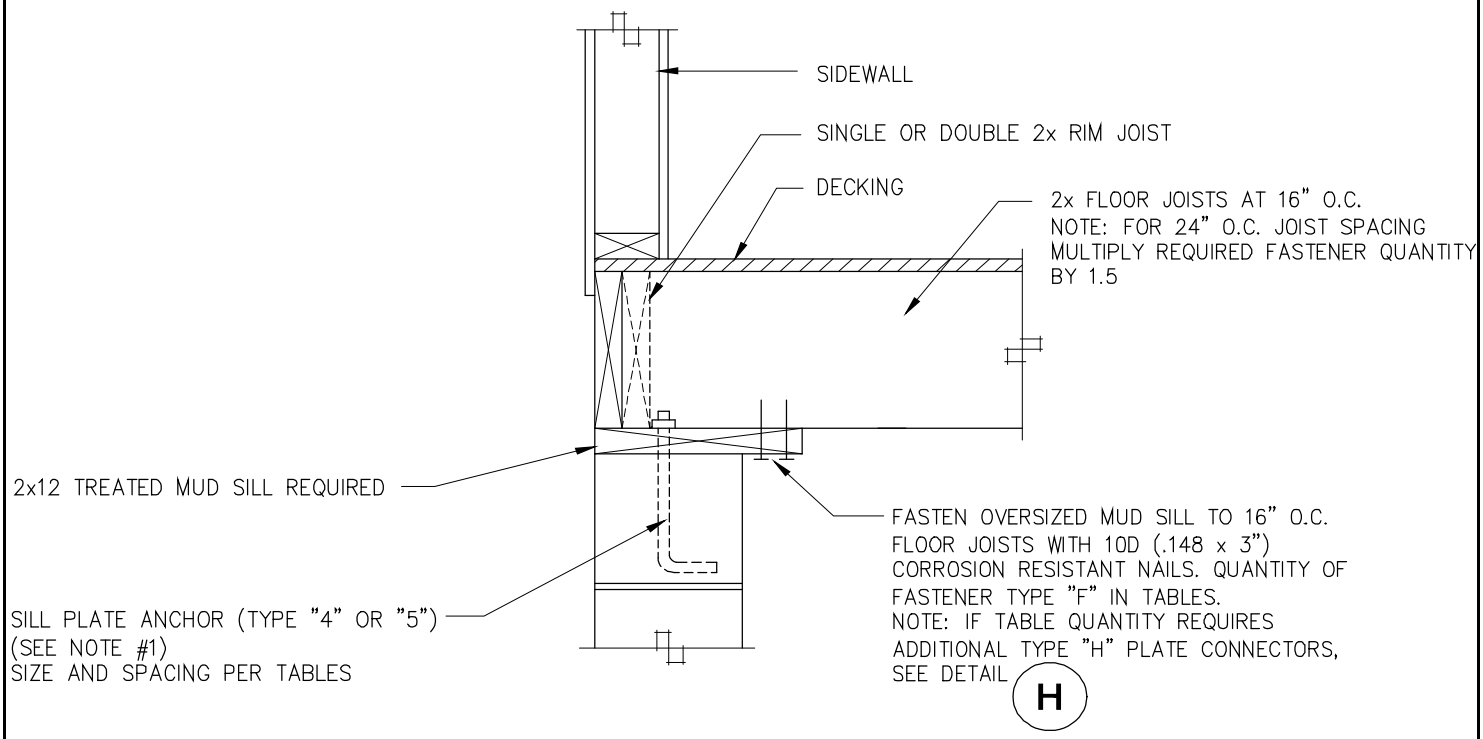

APPROVED BY
NTA INC.
7/31/2018
Approval of this document does not authorize or approve any deviation or deviations from the requirements of applicable State Laws.
David Richter

ALTERNATE FASTENERS:
THE FOLLOWING ALTERNATE FASTENERS MAY BE USED WHEN QUANTITY IN TABLE IS MULTIPLIED BY THE FOLLOWING FASTENER MULTIPLIER.

8D (.131 x 3") NAIL = 1.21
16D (.162 x 3 1/2") NAIL = .83
#8 x 3" WOOD SCREW = 1.28

NOTE: THIS DETAIL FOR TYPE "F" FASTENING IS APPLICABLE TO SIDEWALL CONNECTIONS ONLY AND CAN NOT BE USED FOR ENDWALLS.
SEE FASTENING TYPE "E" OR TYPE "G" FOR ENDWALL APPLICATION.

FLOOR TO SILL PLATE FASTENING - TYPE "F" - SIDEWALL ONLY

NOTES:

1) **MUD SILL TO FOUNDATION ANCHORS:**
   TYPE 4:DIAMETER STEEL ANCHOR BOLTS EMBEDDED 7" MIN. INTO CONCRETE FOUNDATION WALL OR CLOSE CELL CMU WITH WASHERS AND NUTS. BOLT HEADS SHALL NOT BE RECESSED INTO SINGLE SILL PLATE.
   TYPE 5: SIMPSON MAB OR MASA MUD SILL ANCHOR INSTALLED PER INSTALLATION INSTRUCTIONS
2) **RIM TO MUD SILL FASTENING AND SILL TO FOUNDATION ANCHOR SPACING SHALL BE THE** MINIMUM OF:
   a) **SPACING GIVEN IN APPLICABLE TABLES FOR UNIT CONFIGURATION AND WIND SPEED.**
   b) **SPACING GIVEN IN BACKFILL/ SIDEWALL TABLES FOR GIVEN UNIT CONFIGURATION, MAXIMUM BASEMENT WALL HEIGHT, BACKFILL DEPTH, AND LOCAL SOIL** CLASSIFICATION.

Model: 7609A6401 (51373)
Customer: Webb Harnett Co., NC

Clayton home building group

FLOOR TO SILL PLATE FASTENING - SIDEWALL ONLY
DETAIL - F

DATE: 04/17/07 | 976I-10.R.K.E.16.3.210(_)

PAGE #:

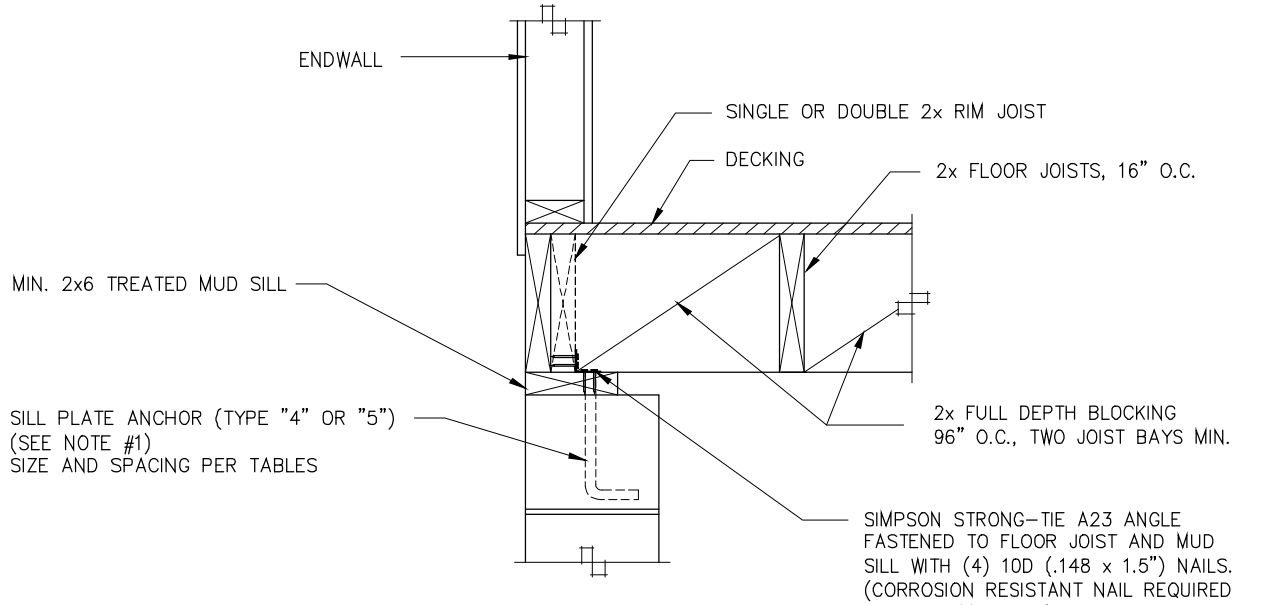

ENDWALL DETAIL

APPROVED BY
NTA INC.
7/31/2018
Approval of this document does not authorize or approve any deviation or deviations from the requirements of applicable State Laws.
David Richter

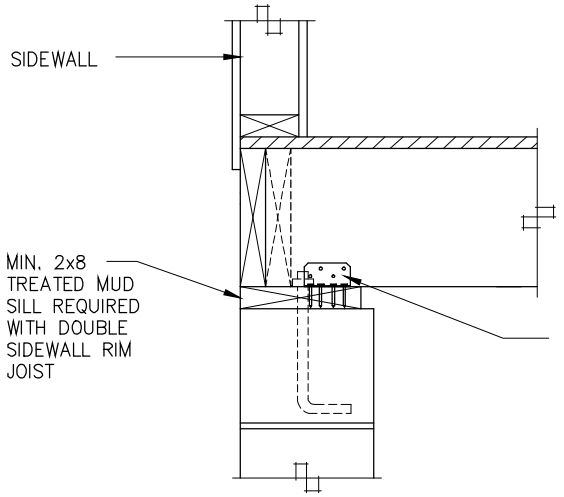

SIMPSON STRONG-TIE A23 ANGLE
FASTENED TO FLOOR JOIST AND MUD
SILL WITH (4) 10D (.148 x 1.5") NAILS.
(CORROSION RESISTANT NAIL REQUIRED
INTO P.T. MUD SILL)
USE (1) OR (2) ANGLES EA. JOIST PER
FASTENER TYPE "G" IN TABLES.
NOTE: IF SPACING REQUIRES ADDITIONAL
TYPE "H" PLATE CONNECTORS,
SEE DETAIL H

SIDEWALL DETAIL

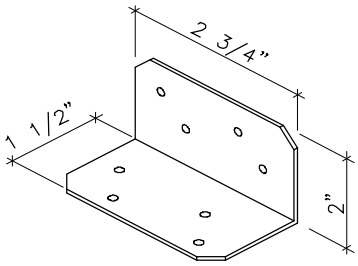

SIMPSON STRONG-TIE
'A23' ANGLE

FLOOR TO SILL PLATE FASTENING - TYPE "G" -ENDWALL OR SIDEWALL

NOTES:

1) **MUD SILL TO FOUNDATION ANCHORS:**
   TYPE 4:DIAMETER STEEL ANCHOR BOLTS EMBEDDED 7" MIN. INTO CONCRETE FOUNDATION WALL OR CLOSE CELL CMU WITH WASHERS AND NUTS. BOLT HEADS SHALL NOT BE RECESSED INTO SINGLE SILL PLATE.
   TYPE 5: SIMPSON MAB OR MASA MUD SILL ANCHOR INSTALLED PER INSTALLATION INSTRUCTIONS
2) **RIM TO MUD SILL FASTENING AND SILL TO FOUNDATION ANCHOR SPACING SHALL BE THE** MINIMUM OF:
   a) **SPACING GIVEN IN APPLICABLE TABLES FOR UNIT CONFIGURATION AND WIND SPEED.**
   b) **SPACING GIVEN IN BACKFILL/ SIDEWALL TABLES FOR GIVEN UNIT CONFIGURATION, MAXIMUM BASEMENT WALL HEIGHT, BACKFILL DEPTH, AND LOCAL SOIL** CLASSIFICATION.

Model: 7609A6401 (51373)
Customer: Webb Harnett Co., NC

Clayton home building group

FLOOR TO SILL PLATE FASTENING - ENDWALL OR SIDEWALL - DETAIL - G

DATE: 05/25/07 | 976I-10.R.K.E.16.3.210(_)

PAGE #: Page 24 OF 31

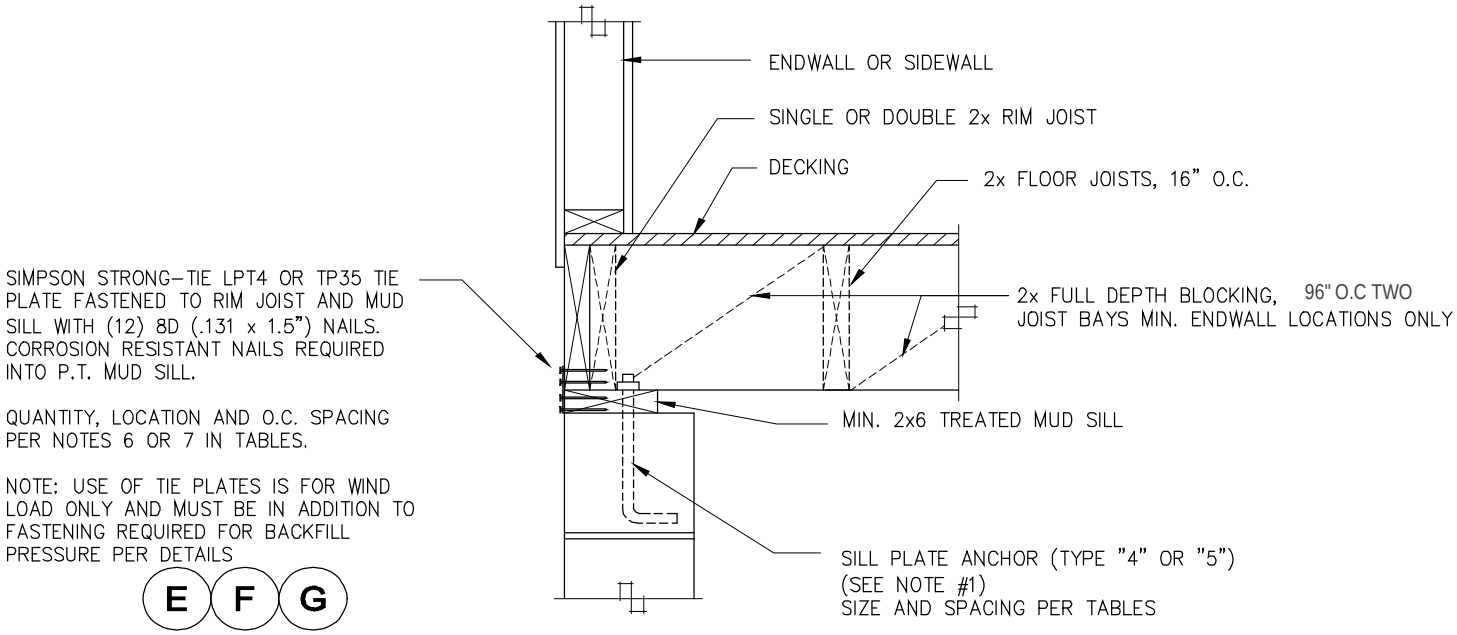

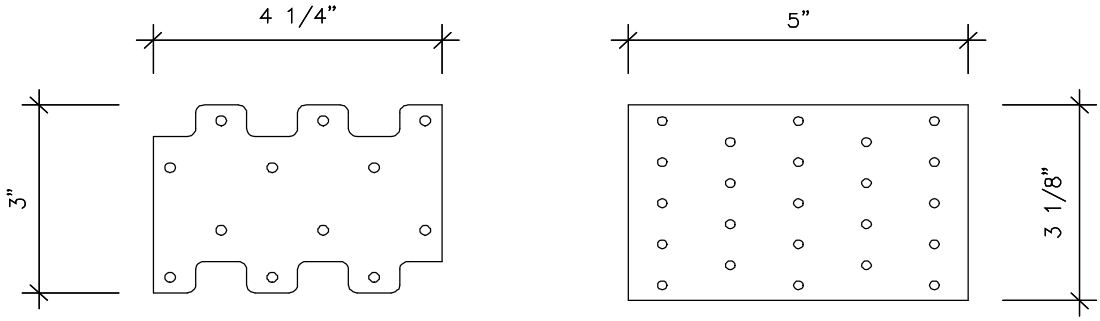

SIMPSON STRONG-TIE "LTP4" TIE PLATE

SIMPSON STRONG-TIE "TP35" TIE PLATE

APPROVED BY
NTA INC.
7/31/2018
Approval of this document does not authorize or approve any deviation or deviations from the requirements of applicable State Laws.
David Richter

FLOOR TO SILL PLATE FASTENING - TYPE "H" - ENDWALL OR SIDEWALL

NOTES:

1) **MUD SILL TO FOUNDATION ANCHORS:**
   TYPE 4: DIAMETER STEEL ANCHOR BOLTS EMBEDDED 7" MIN. INTO CONCRETE FOUNDATION WALL OR CLOSE CELL CMU WITH WASHERS AND NUTS. BOLT HEADS SHALL NOT BE RECESSED INTO SINGLE SILL PLATE.
   TYPE 5: SIMPSON MAB OR MASA MUD SILL ANCHOR INSTALLED PER INSTALLATION INSTRUCTIONS
2) **RIM TO MUD SILL FASTENING AND SILL TO FOUNDATION ANCHOR SPACING SHALL BE THE** MINIMUM OF:
   a) **SPACING GIVEN IN APPLICABLE TABLES FOR UNIT CONFIGURATION AND WIND SPEED.**
   b) **SPACING GIVEN IN BACKFILL/ SIDEWALL TABLES FOR GIVEN UNIT CONFIGURATION, MAXIMUM BASEMENT WALL HEIGHT, BACKFILL DEPTH, AND LOCAL SOIL** CLASSIFICATION.

Model: 7609A6401 (51373)
Customer: Webb Harnett Co., NC

Clayton home building group

FLOOR TO SILL PLATE FASTENING - ENDWALL OR SIDEWALL - DETAIL - H

DATE: 04/17/07 | 976I-10.R.K.E.16.3.210(_)

PAGE #:

Home Floor to Sill Plate & Sill Plate to Foundation
WITH TYPE H PLATE CONNECTORS (See note 6 & 7)
SOIL CLASSES GW, GP, SW AND SP SOILS

Model: 7609A6401 (51373)
Customer: Webb
Harnett Co., NC

Unit Width: 30' to 30' Max.
Unit Length: 64' Max.
Roof Pitch: 6/12 to 6/12
Max. Roof Overhang: 10 "
Max. Sidewall Height: 8 '
Max. Wind Speed 100 MPH
Seismic Zone C

APPROVED BY
NTA INC.
7/31/2018
Approval of this document does not authorize or approve any deviation or deviations from the requirements of applicable State Laws.
David Richter

		MAXIMUM FASTENER SPACING OR FASTENERS PER JOIST SPACING [2,3 & 5]									# REQ'D
		SIDEWALL FASTENING SPACING [1]					END WALL FASTENING				S/W HDS
Foundation Wall[10]		Rim to Sill[6]			Sill to Fnd. Wall		Rim to Sill[7]		Sill to Fnd. Wall		SEE
Wall	Backfill	Fastener Type			Anchor Spacing		Fastener Type		Anchor Spacing		D18
Height	Depth	E	F [4]	G [4]	4	5	E	G	4	5	/CORNER
24 "	16 "	9.7" o.c.	1	1	72" o.c.	72" o.c.	80" o.c.	269" o.c.	57" o.c.	30" o.c.	0
32 "	24 "	15.5" o.c.	1	1	72" o.c.	72" o.c.	32" o.c.	106" o.c.	56" o.c.	30" o.c.	0
40 "	32 "	15.5" o.c.	1	1	72" o.c.	72" o.c.	17" o.c.	56" o.c.	54" o.c.	30" o.c.	0
5 '	4 '	7.4" o.c.	2	1	64" o.c.	70" o.c.	7" o.c.	25" o.c.	46" o.c.	28" o.c.	0
7 '	4 '	10.4" o.c.	1	1	72" o.c.	72" o.c.	10" o.c.	35" o.c.	51" o.c.	29" o.c.	0
7 '	5 '	5.3" o.c.	2	1	46" o.c.	51" o.c.	5" o.c.	18" o.c.	40" o.c.	26" o.c.	0
7 '	6 '	3.1" o.c.	3	1	26" o.c.	29" o.c.	3" o.c.	10" o.c.	26" o.c.	21" o.c.	0
8 '	4 '	11.9" o.c.	1	1	72" o.c.	72" o.c.	12" o.c.	40" o.c.	52" o.c.	29" o.c.	0
8 '	5 '	6.1" o.c.	2	1	52" o.c.	58" o.c.	6" o.c.	20" o.c.	43" o.c.	27" o.c.	0
8 '	6 '	3.5" o.c.	3	1	30" o.c.	33" o.c.	4" o.c.	12" o.c.	30" o.c.	23" o.c.	0
8 '	7 '	NA	5	1	19" o.c.	21" o.c.	NA	7" o.c.	19" o.c.	17" o.c.	0
9 '	3 '	15.5" o.c.	1	1	72" o.c.	72" o.c.	32" o.c.	106" o.c.	56" o.c.	30" o.c.	0
9 '	4 '	13.4" o.c.	1	1	72" o.c.	72" o.c.	13" o.c.	45" o.c.	53" o.c.	29" o.c.	0
9 '	5 '	6.8" o.c.	2	1	59" o.c.	65" o.c.	7" o.c.	23" o.c.	45" o.c.	27" o.c.	0
9 '	6 '	4.0" o.c.	3	1	34" o.c.	38" o.c.	4" o.c.	13" o.c.	33" o.c.	24" o.c.	0
9 '	7 '	NA	4	1	21" o.c.	24" o.c.	NA	8" o.c.	21" o.c.	19" o.c.	0
9 '	8 '	NA	6	2	14" o.c.	16" o.c.	NA	6" o.c.	14" o.c.	14" o.c.	0

NOTES:

1. Fastener Types A,B,C & D are not reflected in charts and are available prescriptively per table R404.1(1) in 2006 IRC.
2. See details for additional fastener options.
3. All fastener spacing must start within 12" maximum of each corner or half specified spacing (lesser of two).
4. Type F & G connectors are qty. per 16" oc. Joist spacing.
5. Fastener Type Key:
"Type E"- Fasteners toe-nailed through rim joist into sill plate (Refer to Detail E)
"Type F"- Fasteners direct nailed from sill plate into each floor joist (Applicable at Sidewalls only) (Refer to Detail F)
"Type G"- Number of Simpson A23 angles fastened to sill plate and each 16" OC. (2x8 min. sill plate) (Refer to Detail G)
"Type H"- Simpson LPT4 or TP35 plate fastened to rim joist and mud sill with (12) 8dx1.5" treated nails. (Refer to Detail H)
Anchor Types:
"Type 4"- 1/2" x10" Anchor Bolt with 2"x2"x1/8" Washer between plate and nut.
"Type 5"- Simpson MAB15 (concrete) or MAB23 (concrete block) or MASA
6. Fasteners are in addition to (2) Type H tie plates spaced within 6' of corners & 96" oc. elsewhere along sidewalls.(See note 3)
7. Fasteners are in addition to Type H tie plates spaced at 33" oc. along endwall.
8. Three options (E,F,& G) for rim to sill fastening and two options (4 & 5) for sill plate to foundation anchorage have been provided in chart. Any combination of rim sill connectors and mud sill anchors maybe used.
9. All connection hardware, anchor bolts, straps, hold-downs, washers and fasteners shall be galvanized or stainless when in contact with PT sill plates or other PT lumber.
10. Maximum foundation wall height and maximum unbalanced backfill.

976I-10.R.K.E.16.3.210(_)

Home Floor to Sill Plate & Sill Plate to Foundation
WITH TYPE H PLATE CONNECTORS (See note 6 & 7)
SOIL CLASSES GM, GC, SM, SM-SC AND ML SOILS

Unit Width: 30' to 30' Max.
Unit Length: 64' Max.
Roof Pitch: 6/12 to 6/12
Max. Roof Overhang: 10 "
Max. Sidewall Height: 8 '
Max. Wind Speed 100 MPH
Seismic Zone C

APPROVED BY
NTA INC.
7/31/2018
Approval of this document does not authorize or approve any deviation or deviations from the requirements of applicable State Laws.
David Richter

Model: 7609A6401 (51373)
Customer: Webb
Harnett Co., NC

		MAXIMUM FASTENER SPACING OR FASTENERS PER JOIST SPACING [2,3 & 5]									# REQ'D
		SIDEWALL FASTENING SPACING [1]					END WALL FASTENING				S/W HDS
Foundation Wall[10]		Rim to Sill[6]			Sill to Fnd. Wall		Rim to Sill[7]		Sill to Fnd. Wall		SEE
Wall	Backfill	Fastener Type			Anchor Spacing		Fastener Type		Anchor Spacing		D18
Height	Depth	E	F [4]	G [4]	4	5	E	G	4	5	/CORNER
24 "	16 "	15.5" o.c.	1	1	72" o.c.	72" o.c.	53" o.c.	656" o.c.	56" o.c.	30" o.c.	0
32 "	24 "	15.5" o.c.	1	1	72" o.c.	72" o.c.	21" o.c.	259" o.c.	55" o.c.	30" o.c.	0
40 "	32 "	11.1" o.c.	1	1	72" o.c.	72" o.c.	11" o.c.	137" o.c.	51" o.c.	29" o.c.	0
5 '	4 '	5.0" o.c.	2	1	43" o.c.	47" o.c.	5" o.c.	61" o.c.	38" o.c.	25" o.c.	0
7 '	4 '	6.9" o.c.	2	1	60" o.c.	66" o.c.	7" o.c.	85" o.c.	45" o.c.	27" o.c.	0
7 '	5 '	3.5" o.c.	3	1	30" o.c.	34" o.c.	4" o.c.	44" o.c.	30" o.c.	23" o.c.	0
7 '	6 '	NA	5	1	18" o.c.	19" o.c.	NA	25" o.c.	18" o.c.	16" o.c.	0
8 '	4 '	7.9" o.c.	2	1	68" o.c.	72" o.c.	8" o.c.	97" o.c.	47" o.c.	28" o.c.	0
8 '	5 '	4.1" o.c.	3	1	35" o.c.	38" o.c.	4" o.c.	50" o.c.	34" o.c.	24" o.c.	0
8 '	6 '	NA	4	1	20" o.c.	22" o.c.	NA	29" o.c.	20" o.c.	18" o.c.	0
8 '	7 '	NA	7	2	13" o.c.	14" o.c.	NA	18" o.c.	13" o.c.	13" o.c.	0
9 '	3 '	15.5" o.c.	1	1	72" o.c.	72" o.c.	21" o.c.	259" o.c.	55" o.c.	30" o.c.	0
9 '	4 '	8.9" o.c.	2	1	72" o.c.	72" o.c.	9" o.c.	109" o.c.	49" o.c.	28" o.c.	0
9 '	5 '	4.6" o.c.	2	1	39" o.c.	43" o.c.	5" o.c.	56" o.c.	36" o.c.	25" o.c.	0
9 '	6 '	NA	4	1	23" o.c.	25" o.c.	NA	32" o.c.	23" o.c.	19" o.c.	0
9 '	7 '	NA	6	2	14" o.c.	16" o.c.	NA	20" o.c.	14" o.c.	14" o.c.	0
9 '	8 '	NA	9	0	10" o.c.	11" o.c.	NA	14" o.c.	10" o.c.	10" o.c.	0

NOTES:

1. Fastener Types A,B,C & D are not reflected in charts and are available prescriptively per table R404.1(1) in 2006 IRC.
2. See details for additional fastener options.
3. All fastener spacing must start within 12" maximum of each corner or half specified spacing (lesser of two).
4. Type F & G connectors are qty. per 16" oc. Joist spacing.
5. Fastener Type Key:
"Type E"- Fasteners toe-nailed through rim joist into sill plate (Refer to Detail E)
"Type F"- Fasteners direct nailed from sill plate into each floor joist (Applicable at Sidewalls only) (Refer to Detail F)
"Type G"- Number of Simpson A23 angles fastened to sill plate and each 16" OC. (2x8 min. sill plate) (Refer to Detail G)
"Type H"- Simpson LPT4 or TP35 plate fastened to rim joist and mud sill with (12) 8dx1.5" treated nails. (Refer to Detail H)
Anchor Types:
"Type 4"- 1/2" x10" Anchor Bolt with 2"x2"x1/8" Washer between plate and nut.
"Type 5"- Simpson MAB15 (concrete) or MAB23 (concrete block) or MASA
6. Fasteners are in addition to (2) Type H tie plates spaced within 6' of corners & 96" oc. elsewhere along sidewalls.(See note 3)
7. Fasteners are in addition to Type H tie plates spaced at 33" oc. along endwall.
8. Three options (E,F,& G) for rim to sill fastening and two options (4 & 5) for sill plate to foundation anchorage have been provided in chart. Any combination of rim sill connectors and mud sill anchors maybe used.
9. All connection hardware, anchor bolts, straps, hold-downs, washers and fasteners shall be galvanized or stainless when in contact with PT sill plates or other PT lumber.
10. Maximum foundation wall height and maximum unbalanced backfill.

976I-10.R.K.E.16.3.210(_)

Home Floor to Sill Plate & Sill Plate to Foundation
WITH TYPE H PLATE CONNECTORS (See note 6 & 7)
SOIL CLASSES SC, ML-CL AND INORGANIC CL SOILS

Unit Width: 30' to 30' Max.
Unit Length: 64' Max.
Roof Pitch: 6/12 to 6/12
Max. Roof Overhang: 10 "
Max. Sidewall Height: 8 '
Max. Wind Speed 100 MPH
Seismic Zone C

APPROVED BY
NTA INC.
7/31/2018
Approval of this document does not authorize or approve any deviation or deviations from the requirements of applicable State Laws.
David Richter

Model: 7609A6401 (51373)
Customer: Webb
Harnett Co., NC

		MAXIMUM FASTENER SPACING OR FASTENERS PER JOIST SPACING [2,3 & 5]									# REQ'D
		SIDEWALL FASTENING SPACING [1]					END WALL FASTENING				S/W HDS
Foundation Wall[10]		Rim to Sill[6]			Sill to Fnd. Wall		Rim to Sill[7]		Sill to Fnd. Wall		SEE
Wall	Backfill	Fastener Type			Anchor Spacing		Fastener Type		Anchor Spacing		D18
Height	Depth	E	F [4]	G [4]	4	5	E	G	4	5	/CORNER
24 "	16 "	15.5" o.c.	1	1	72" o.c.	72" o.c.	40" o.c.	492" o.c.	56" o.c.	30" o.c.	0
32 "	24 "	15.5" o.c.	1	1	72" o.c.	72" o.c.	16" o.c.	194" o.c.	54" o.c.	29" o.c.	0
40 "	32 "	8.4" o.c.	2	1	72" o.c.	72" o.c.	8" o.c.	102" o.c.	48" o.c.	28" o.c.	0
5 '	4 '	3.7" o.c.	3	1	32" o.c.	35" o.c.	4" o.c.	46" o.c.	31" o.c.	23" o.c.	0
7 '	4 '	5.2" o.c.	2	1	45" o.c.	49" o.c.	5" o.c.	64" o.c.	39" o.c.	26" o.c.	0
7 '	5 '	NA	4	1	23" o.c.	25" o.c.	NA	33" o.c.	23" o.c.	20" o.c.	0
7 '	6 '	NA	6	2	13" o.c.	15" o.c.	NA	19" o.c.	13" o.c.	13" o.c.	0
8 '	4 '	5.9" o.c.	2	1	51" o.c.	56" o.c.	6" o.c.	73" o.c.	42" o.c.	27" o.c.	0
8 '	5 '	3.0" o.c.	3	1	26" o.c.	29" o.c.	3" o.c.	37" o.c.	26" o.c.	21" o.c.	0
8 '	6 '	NA	6	2	15" o.c.	17" o.c.	NA	22" o.c.	15" o.c.	15" o.c.	0
8 '	7 '	NA	9	2	10" o.c.	11" o.c.	NA	14" o.c.	10" o.c.	10" o.c.	0
9 '	3 '	15.5" o.c.	1	1	72" o.c.	72" o.c.	16" o.c.	194" o.c.	54" o.c.	29" o.c.	0
9 '	4 '	6.7" o.c.	2	1	57" o.c.	63" o.c.	7" o.c.	82" o.c.	44" o.c.	27" o.c.	0
9 '	5 '	3.4" o.c.	3	1	29" o.c.	32" o.c.	3" o.c.	42" o.c.	29" o.c.	22" o.c.	0
9 '	6 '	NA	5	2	17" o.c.	19" o.c.	NA	24" o.c.	17" o.c.	16" o.c.	0
9 '	7 '	NA	8	2	11" o.c.	12" o.c.	NA	15" o.c.	11" o.c.	11" o.c.	0
9 '	8 '	NA	11	NA	7" o.c.	8" o.c.	NA	10" o.c.	7" o.c.	8" o.c.	0

NOTES:

1. Fastener Types A,B,C & D are not reflected in charts and are available prescriptively per table R404.1(1) in 2006 IRC.
2. See details for additional fastener options.
3. All fastener spacing must start within 12" maximum of each corner or half specified spacing (lesser of two).
4. Type F & G connectors are qty. per 16" oc. Joist spacing.
5. Fastener Type Key:
"Type E"- Fasteners toe-nailed through rim joist into sill plate (Refer to Detail E)
"Type F"- Fasteners direct nailed from sill plate into each floor joist (Applicable at Sidewalls only) (Refer to Detail F)
"Type G"- Number of Simpson A23 angles fastened to sill plate and each 16" OC. (2x8 min. sill plate) (Refer to Detail G)
"Type H"- Simpson LPT4 or TP35 plate fastened to rim joist and mud sill with (12) 8dx1.5" treated nails. (Refer to Detail H)
Anchor Types:
"Type 4"- 1/2" x10" Anchor Bolt with 2"x2"x1/8" Washer between plate and nut.
"Type 5"- Simpson MAB15 (concrete) or MAB23 (concrete block) or MASA
6. Fasteners are in addition to (2) Type H tie plates spaced within 6' of corners & 96" oc. elsewhere along sidewalls.(See note 3)
7. Fasteners are in addition to Type H tie plates spaced at 33" oc. along endwall.
8. Three options (E,F,& G) for rim to sill fastening and two options (4 & 5) for sill plate to foundation anchorage have been provided in chart. Any combination of rim sill connectors and mud sill anchors maybe used.
9. All connection hardware, anchor bolts, straps, hold-downs, washers and fasteners shall be galvanized or stainless when in contact with PT sill plates or other PT lumber.
10. Maximum foundation wall height and maximum unbalanced backfill.

976I-10.R.K.E.16.3.210(_)

Home Floor to Sill Plate & Sill Plate to Foundation
WITHOUT TYPE H PLATE CONNECTORS (See note 6 & 7)
SOIL CLASSES GW, GP, SW AND SP SOILS

Unit Width: 30' to 30' Max.
Unit Length: 64' Max.
Roof Pitch: 6/12 to 6/12
Max. Roof Overhang: 10 "
Max. Sidewall Height: 8 '
Max. Wind Speed 100 MPH
Seismic Zone C

APPROVED BY
NTA INC.
7/31/2018
Approval of this document does not authorize or approve any deviation or deviations from the requirements of applicable State Laws.
David Richter

Model: 7609A6401 (51373)
Customer: Webb
Harnett Co., NC

		MAXIMUM FASTENER SPACING OR FASTENERS PER JOIST SPACING [2,3 & 5]									# REQ'D
		SIDEWALL FASTENING SPACING [1]					END WALL FASTENING				S/W HDS
Foundation Wall[10]		Rim to Sill[6]			Sill to Fnd. Wall		Rim to Sill[7]		Sill to Fnd. Wall		SEE
Wall	Backfill	Fastener Type			Anchor Spacing		Fastener Type		Anchor Spacing		D18
Height	Depth	E	F [4]	G [4]	4	5	E	G	4	5	/CORNER
24 "	16 "	9.7" o.c.	1	1	72" o.c.	72" o.c.	8" o.c.	30" o.c.	57" o.c.	30" o.c.	1
32 "	24 "	9.7" o.c.	1	1	72" o.c.	72" o.c.	8" o.c.	30" o.c.	56" o.c.	30" o.c.	1
40 "	32 "	9.7" o.c.	1	1	72" o.c.	72" o.c.	8" o.c.	28" o.c.	54" o.c.	30" o.c.	1
5 '	4 '	7.4" o.c.	2	1	64" o.c.	70" o.c.	6" o.c.	23" o.c.	46" o.c.	28" o.c.	1
7 '	4 '	9.7" o.c.	1	1	72" o.c.	72" o.c.	7" o.c.	26" o.c.	51" o.c.	29" o.c.	1
7 '	5 '	5.3" o.c.	2	1	46" o.c.	51" o.c.	5" o.c.	19" o.c.	40" o.c.	26" o.c.	1
7 '	6 '	3.1" o.c.	3	1	26" o.c.	29" o.c.	3" o.c.	12" o.c.	26" o.c.	21" o.c.	1
8 '	4 '	9.7" o.c.	1	1	72" o.c.	72" o.c.	7" o.c.	27" o.c.	52" o.c.	29" o.c.	1
8 '	5 '	6.1" o.c.	2	1	52" o.c.	58" o.c.	6" o.c.	21" o.c.	43" o.c.	27" o.c.	1
8 '	6 '	3.5" o.c.	3	1	30" o.c.	33" o.c.	4" o.c.	13" o.c.	30" o.c.	23" o.c.	1
8 '	7 '	NA	5	1	19" o.c.	21" o.c.	NA	8" o.c.	19" o.c.	17" o.c.	0
9 '	3 '	9.7" o.c.	1	1	72" o.c.	72" o.c.	8" o.c.	30" o.c.	56" o.c.	30" o.c.	1
9 '	4 '	9.7" o.c.	1	1	72" o.c.	72" o.c.	7" o.c.	27" o.c.	53" o.c.	29" o.c.	1
9 '	5 '	6.8" o.c.	2	1	59" o.c.	65" o.c.	6" o.c.	22" o.c.	45" o.c.	27" o.c.	1
9 '	6 '	4.0" o.c.	3	1	34" o.c.	38" o.c.	4" o.c.	15" o.c.	33" o.c.	24" o.c.	1
9 '	7 '	NA	4	1	21" o.c.	24" o.c.	NA	9" o.c.	21" o.c.	19" o.c.	0
9 '	8 '	NA	6	2	14" o.c.	16" o.c.	NA	6" o.c.	14" o.c.	14" o.c.	0

NOTES:

1. RESERVED

2. See details for additional fastener options.

3. All fastener spacing must start within 12" maximum of each corner or half specified spacing (lesser of two).

4. Type F & G connectors are qty. per 16" oc. Joist spacing.

5. Fastener Type Key:

" Type E"- Fasteners toe-nailed through rim joist into sill plate (Refer to Detail E)

"Type F"- Fasteners direct nailed from sill plate into each floor joist (Applicable at Sidewalls only) (Refer to Detail F)

"Type G"- Number of Simpson A23 angles fastened to sill plate and each 16" OC. (2x8 min. sill plate) (Refer to Detail G)

"Type H"- Simpson LPT4 or TP35 plate fastened to rim joist and mud sill with (12) 8dx1.5" treated nails. (Refer to Detail H)

Anchor Types:

"Type 4"- 1/2" x10" Anchor Bolt with 2"x2"x1/8" Washer between plate and nut.

"Type 5"- Simpson MAB15 (concrete) or MAB23 (concrete block) or MASA

6. Fasteners reflected in chart do NOT require "H type" connector plates to be installed along sidewall.

7. Fasteners reflected in chart do NOT require "H type" connector plates to be installed along endwall.

8. Three options (E,F,& G) for rim to sill fastening and two options (4 & 5) for sill plate to foundation anchorage have been provided in chart. Any combination of rim sill connectors and mud sill anchors maybe used.

9. All connection hardware, anchor bolts, straps, hold-downs, washers and fasteners shall be galvanized or stainless when in contact with PT sill plates or other PT lumber.

10. Maximum foundation wall height and maximum unbalanced backfill.

976I-10.R.K.E.16.3.210(_)

Home Floor to Sill Plate & Sill Plate to Foundation
WITHOUT TYPE H PLATE CONNECTORS (See note 6 & 7)
SOIL CLASSES GM, GC, SM, SM-SC AND ML SOILS

Unit Width: 30' to 30' Max.
Unit Length: 64' Max.
Roof Pitch: 6/12 to 6/12
Max. Roof Overhang: 10 "
Max. Sidewall Height: 8 '
Max. Wind Speed 100 MPH
Seismic Zone C

APPROVED BY
NTA INC.
7/31/2018
Approval of this document does not authorize or approve any deviation or deviations from the requirements of applicable State Laws.
David Richter

Model: 7609A6401 (51373)
Customer: Webb
Harnett Co., NC

		MAXIMUM FASTENER SPACING OR FASTENERS PER JOIST SPACING [2,3 & 5]									# REQ'D S/W HDS SEE D18 /CORNER
		SIDEWALL FASTENING SPACING [1]					END WALL FASTENING				
Foundation Wall[10]		Rim to Sill[6]			Sill to Fnd. Wall		Rim to Sill[7]		Sill to Fnd. Wall		
Wall Height	Backfill Depth	Fastener Type			Anchor Spacing		Fastener Type		Anchor Spacing		
		E[9]	F[4]	G[4]	4	5	E	G	4	5	
24 "	16 "	9.7" o.c.	1	1	72" o.c.	72" o.c.	8" o.c.	30" o.c.	56" o.c.	30" o.c.	1
32 "	24 "	9.7" o.c.	1	1	72" o.c.	72" o.c.	8" o.c.	29" o.c.	55" o.c.	30" o.c.	1
40 "	32 "	9.7" o.c.	1	1	72" o.c.	72" o.c.	7" o.c.	26" o.c.	51" o.c.	29" o.c.	1
5 '	4 '	5.0" o.c.	2	1	43" o.c.	47" o.c.	5" o.c.	18" o.c.	38" o.c.	25" o.c.	1
7 '	4 '	6.9" o.c.	2	1	60" o.c.	66" o.c.	6" o.c.	22" o.c.	45" o.c.	27" o.c.	1
7 '	5 '	3.5" o.c.	3	1	30" o.c.	34" o.c.	4" o.c.	13" o.c.	30" o.c.	23" o.c.	1
7 '	6 '	NA	5	1	18" o.c.	19" o.c.	NA	8" o.c.	18" o.c.	16" o.c.	0
8 '	4 '	7.9" o.c.	2	1	68" o.c.	72" o.c.	6" o.c.	23" o.c.	47" o.c.	28" o.c.	1
8 '	5 '	4.1" o.c.	3	1	35" o.c.	38" o.c.	4" o.c.	15" o.c.	34" o.c.	24" o.c.	1
8 '	6 '	NA	4	1	20" o.c.	22" o.c.	NA	9" o.c.	20" o.c.	18" o.c.	0
8 '	7 '	NA	7	2	13" o.c.	14" o.c.	NA	5" o.c.	13" o.c.	13" o.c.	0
9 '	3 '	9.7" o.c.	1	1	72" o.c.	72" o.c.	8" o.c.	29" o.c.	55" o.c.	30" o.c.	1
9 '	4 '	8.9" o.c.	2	1	72" o.c.	72" o.c.	7" o.c.	25" o.c.	49" o.c.	28" o.c.	1
9 '	5 '	4.6" o.c.	2	1	39" o.c.	43" o.c.	5" o.c.	17" o.c.	36" o.c.	25" o.c.	1
9 '	6 '	NA	4	1	23" o.c.	25" o.c.	NA	10" o.c.	23" o.c.	19" o.c.	0
9 '	7 '	NA	6	2	14" o.c.	16" o.c.	NA	6" o.c.	14" o.c.	14" o.c.	0
9 '	8 '	NA	9	2	10" o.c.	11" o.c.	NA	4" o.c.	10" o.c.	10" o.c.	0

NOTES:

1. RESERVED

2. See details for additional fastener options.

3. All fastener spacing must start within 12" maximum of each corner or half specified spacing (lesser of two).

4. Type F & G connectors are qty. per 16" oc. Joist spacing.

5. Fastener Type Key:

" Type E"- Fasteners toe-nailed through rim joist into sill plate (Refer to Detail E)

"Type F"- Fasteners direct nailed from sill plate into each floor joist (Applicable at Sidewalls only) (Refer to Detail F)

"Type G"- Number of Simpson A23 angles fastened to sill plate and each 16" OC. (2x8 min. sill plate) (Refer to Detail G)

"Type H"- Simpson LPT4 or TP35 plate fastened to rim joist and mud sill with (12) 8dx1.5" treated nails. (Refer to Detail H)

Anchor Types:

"Type 4"- 1/2" x10" Anchor Bolt with 2"x2"x1/8" Washer between plate and nut.

"Type 5"- Simpson MAB15 (concrete) or MAB23 (concrete block) or MASA

6. Fasteners reflected in chart do NOT require "H type" connector plates to be installed along sidewall.

7. Fasteners reflected in chart do NOT require "H type" connector plates to be installed along endwall.

8. Three options (E,F,& G) for rim to sill fastening and two options (4 & 5) for sill plate to foundation anchorage have been provided in chart. Any combination of rim sill connectors and mud sill anchors maybe used.

9. All connection hardware, anchor bolts, straps, hold-downs, washers and fasteners shall be galvanized or stainless when in contact with PT sill plates or other PT lumber.

10. Maximum foundation wall height and maximum unbalanced backfill.

976I-10.R.K.E.16.3.210(_)

Home Floor to Sill Plate & Sill Plate to Foundation
WITHOUT TYPE H PLATE CONNECTORS (See note 6 & 7)
SOIL CLASSES SC, MH, ML-CL AND INORGANIC CL SOILS

Unit Width: 30' to 30' Max.
Unit Length: 64' Max.
Roof Pitch: 6/12 to 6/12
Max. Roof Overhang: 10 "
Max. Sidewall Height: 8 '
Max. Wind Speed 100 MPH
Seismic Zone C

APPROVED BY
NTA INC.
7/31/2018
Approval of this document does not authorize or approve any deviation or deviations from the requirements of applicable State Laws.
David Richter

Model: 7609A6401 (51373)
Customer: Webb
Harnett Co., NC

		MAXIMUM FASTENER SPACING OR FASTENERS PER JOIST SPACING [2,3 & 5]									# REQ'D S/W HDS SEE D18 /CORNER
		SIDEWALL FASTENING SPACING [1]					END WALL FASTENING				
Foundation Wall[10]		Rim to Sill[6]			Sill to Fnd. Wall		Rim to Sill[7]		Sill to Fnd. Wall		
Wall Height	Backfill Depth	Fastener Type			Anchor Spacing		Fastener Type		Anchor Spacing		
		E[9]	F[4]	G[4]	4	5	E	G	4	5	
24 "	16 "	9.7" o.c.	1	1	72" o.c.	72" o.c.	8" o.c.	30" o.c.	56" o.c.	30" o.c.	1
32 "	24 "	9.7" o.c.	1	1	72" o.c.	72" o.c.	7" o.c.	28" o.c.	54" o.c.	29" o.c.	1
40 "	32 "	8.4" o.c.	2	1	72" o.c.	72" o.c.	7" o.c.	24" o.c.	48" o.c.	28" o.c.	1
5 '	4 '	3.7" o.c.	3	1	32" o.c.	35" o.c.	4" o.c.	14" o.c.	31" o.c.	23" o.c.	1
7 '	4 '	5.2" o.c.	2	1	45" o.c.	49" o.c.	5" o.c.	19" o.c.	39" o.c.	26" o.c.	1
7 '	5 '	NA	4	1	23" o.c.	25" o.c.	NA	10" o.c.	23" o.c.	20" o.c.	0
7 '	6 '	NA	6	2	13" o.c.	15" o.c.	NA	6" o.c.	13" o.c.	13" o.c.	0
8 '	4 '	5.9" o.c.	2	1	51" o.c.	56" o.c.	6" o.c.	20" o.c.	42" o.c.	27" o.c.	1
8 '	5 '	3.0" o.c.	3	1	26" o.c.	29" o.c.	3" o.c.	12" o.c.	26" o.c.	21" o.c.	1
8 '	6 '	NA	6	2	15" o.c.	17" o.c.	NA	6" o.c.	15" o.c.	15" o.c.	0
8 '	7 '	NA	9	2	10" o.c.	11" o.c.	NA	4" o.c.	10" o.c.	10" o.c.	0
9 '	3 '	9.7" o.c.	1	1	72" o.c.	72" o.c.	7" o.c.	28" o.c.	54" o.c.	29" o.c.	1
9 '	4 '	6.7" o.c.	2	1	57" o.c.	63" o.c.	6" o.c.	22" o.c.	44" o.c.	27" o.c.	1
9 '	5 '	3.4" o.c.	3	1	29" o.c.	32" o.c.	4" o.c.	13" o.c.	29" o.c.	22" o.c.	1
9 '	6 '	NA	5	2	17" o.c.	19" o.c.	NA	7" o.c.	17" o.c.	16" o.c.	0
9 '	7 '	NA	8	2	11" o.c.	12" o.c.	NA	4" o.c.	11" o.c.	11" o.c.	0
9 '	8 '	NA	11	NA	7" o.c.	8" o.c.	NA	3" o.c.	7" o.c.	8" o.c.	0

NOTES:

1. RESERVED

2. See details for additional fastener options.

3. All fastener spacing must start within 12" maximum of each corner or half specified spacing (lesser of two).

4. Type F & G connectors are qty. per 16" oc. Joist spacing.

5. Fastener Type Key:

" Type E"- Fasteners toe-nailed through rim joist into sill plate (Refer to Detail E)

"Type F"- Fasteners direct nailed from sill plate into each floor joist (Applicable at Sidewalls only) (Refer to Detail F)

"Type G"- Number of Simpson A23 angles fastened to sill plate and each 16" OC. (2x8 min. sill plate) (Refer to Detail G)

"Type H"- Simpson LPT4 or TP35 plate fastened to rim joist and mud sill with (12) 8dx1.5" treated nails. (Refer to Detail H)

Anchor Types:

"Type 4"- 1/2" x10" Anchor Bolt with 2"x2"x1/8" Washer between plate and nut.

"Type 5"- Simpson MAB15 (concrete) or MAB23 (concrete block) or MASA

6. Fasteners reflected in chart do NOT require "H type" connector plates to be installed along sidewall.

7. Fasteners reflected in chart do NOT require "H type" connector plates to be installed along endwall.

8. Three options (E,F,& G) for rim to sill fastening and two options (4 & 5) for sill plate to foundation anchorage have been provided in chart. Any combination of rim sill connectors and mud sill anchors maybe used.

9. All connection hardware, anchor bolts, straps, hold-downs, washers and fasteners shall be galvanized or stainless when in contact with PT sill plates or other PT lumber.

10. Maximum foundation wall height and maximum unbalanced backfill.

976I-10.R.K.E.16.3.210(_)

GENERAL INSTALLATION INFORMATION

- THIS HOME WAS DESIGNED, ENGINEERED AND BUILT WITH GREAT PRIDE AND CARE AND IS A TOTALLY INTEGRATED STRUCTURE. THEREFORE, IT IS IMPORTANT THAT THESE INSTRUCTIONS BE CLOSELY ADHERED FOLLOWED. HOME SETUP AND INSTALLATION SHALL BE PERFORMED BY AN EXPERIENCED AND QUALIFIED CONTRACTOR.
- YOUR HOME STATE MAY HAVE MODULAR HOME INSTALLATION LAWS AND REGULATIONS AND YOUR CONTRACTOR WILL BE REQUIRED TO FOLLOW THESE INSTRUCTIONS. IT MAY ALSO BE REQUIRED THAT YOUR CONTRACTOR, AS WELL AS UTILITY CONTRACTORS, BE LICENSED. YOUR LOCAL AUTHORITIES CAN PROVIDE YOU WITH THE REQUIREMENTS IN YOUR AREA. IF YOUR HOME STATE DOES NOT HAVE SPECIFIC REGULATIONS, THESE INSTRUCTIONS MUST BE FOLLOWED OR THE WARRANTY MAY BECOME VOID.
- A PROPERLY PREPARED SITE IS NECESSARY PRIOR TO BEGINNING THE INSTALLATION OF THE HOME'S SUPPORT SYSTEM. IT IS IMPORTANT THAT THE FOLLOWING ITEMS BE CONSIDERED IN PREPARING THE SITE FOR YOUR HOME. CMH MANUFACTURING WILL CONSIDER THE CONDITION OF THE HOME SITE BEFORE IT WILL BE ABLE TO HONOR ANY APPARENT FOUNDATION RELATED CLAIM.
- THESE DETAILS HAVE INSTRUCTIONS FOR THE PROPER SETUP AND INSTALLATION OF THE HOME AS WELL AS FOR CROSSOVER CONNECTIONS OF UTILITIES (IF IT IS A MULTI-SECTIONAL HOME). CONNECTION TO PUBLIC UTILITIES SHALL BE PERFORMED BY UTILITY COMPANY PERSONNEL OR THEIR AUTHORIZED AGENT.
- PRIOR TO THE DELIVERY OF THIS HOME THE HOMEOWNER OR SETUP CONTRACTOR SHALL CONTACT THE APPROPRIATE LOCAL AUTHORITIES TO DETERMINE THE REQUIREMENTS FOR ZONING, EASEMENTS, ENCROACHMENTS, AND ANY RESTRICTIONS THAT MAY APPLY IN YOUR AREA, AS WELL AS THE NEED FOR PERMITS AND INSPECTIONS.
- DEVIATION FROM THESE INSTRUCTIONS MAY VOID YOUR WARRANTY. ANY ALTERATIONS OR CHANGES TO THIS HOME SHALL BE APPROVED BY A REGISTERED ENGINEER AND MAY STILL BE SUBJECT TO WARRANTY VIOLATIONS.

DRAINAGE AND GRADE

- AN IMPORTANT FACTOR IN ENSURING THE LONG TERM STRUCTURAL INTEGRITY OF THE HOME IS ASSURING THAT THE HOME'S SITE IS PROPERLY DRAINED. MOISTURE UNDER THE HOME MAY LEAD TO STRUCTURAL DAMAGE TO THE FLOOR SYSTEM AND OTHER PARTS OF THE HOME. ADDITIONALLY, FAILURE TO PROVIDE ADEQUATE SLOPE MAY RESULT IN OTHER MOISTURE RELATED PROBLEMS. THE AREA BENEATH AND AROUND THE HOME SHALL BE GRADED AND SLOPED TO PREVENT SURFACE WATER FROM ACCUMULATING UNDER THE HOME. THE HOME SHOULD ALSO BE LOCATED AWAY FROM STREAMS, RIVERS AND OTHER NATURAL DRAINAGE AREAS. IF GUTTERS AND DOWNSPOUTS ARE INSTALLED, ENSURE THE RUNOFF IS DIRECTED AWAY FROM THE HOME.

INSTALLATION TYPES

- THERE ARE SEVERAL DIFFERENT TYPES OF HOME INSTALLATIONS. DEPENDING ON WHICH METHOD THEY WILL USE, MAY EFFECT THE SITE PREPARATION.

INSTALLER

- THIS HOME WEIGHS SEVERAL TONS AND QUALIFIED, TRAINED AND APPROPRIATELY LICENSED PERSONNEL SHALL PERFORM ITS SETUP. PRIOR TO THE COMMENCEMENT OF ANY WORK, THE SETUP CONTRACTOR SHALL ENSURE THAT PROPER SAFETY PRECAUTIONS ARE OBSERVED AND FOLLOWED.

ACCESS TO SITE

- A PROPER ROUTE TO THE SITE SHALL BE SELECTED.

MINIMUM CLEARANCES

- 18" FOR WOOD JOISTS OR THE BOTTOM OF A WOOD STRUCTURAL FLOORS EXPOSED TO THE GROUND IN CRAWL SPACES OR UNEXCAVATED AREA LOCATED WITHIN THE PERIPHERY OF THE BUILDING FOUNDATION.
- 12" FOR WOOD OR STEEL GIRDERS EXPOSED TO THE GROUND IN CRAWL SPACES OR UNEXCAVATED AREA LOCATED WITHIN THE PERIPHERY OF THE BUILDING FOUNDATION.
- 6" FROM THE GROUND FOR WOOD SIDING, SHEATHING AND WALL FRAMING ON THE EXTERIOR OF A BUILDING.

MATELINE GAPS

- THE HOME BUILDING FACILITY HAS INSTALLED A FOAM GASKET AT THE MATE LINE TO SEAL ANY GAPS THAT MAY OCCUR DURING INSTALLATION OF THE MODULES. MODULES SHOULD BE PLACE CLOSE ENOUGH TO COMPRESS THE GASKET. GAPS UP TO 1", ARE ACCEPTABLE IF INSTALL ONE OF THE FOLLOWING TO FILL IN GAPS:
  - FIBERGLASS INSULATION
  - LUMBER
  - EXPANDABLE FOAM
- WOOD SHIMS SHALL BE INSTALLED AT THE FASTENER LOCATION AND FASTENERS SHALL BE INCREASED IN LENGTH BY THE GAP SIZE.
  - EXAMPLE: 1" GAP AND 3" LONG FASTENER CALL OUT
- FASTENER SHALL INCREASE TO 4" LONG FASTENER AND WOOD SHIM SHALL BE INSTALLED IN THE GAP AT THE FASTENER LOCATION.

INSTALLATION OF MODULES WITH CHASSIS

- THE FOLLOWING STEPS SHALL BE FOLLOWED WITH EACH MODULE OF YOUR HOME.
- CAUTION: NO ONE SHALL BE UNDERNEATH THE MODULE WHILE IT IS BEING JACKED UP OR CRANED. SHOULD THE MODULE FALL A SEVERE INJURY COULD OCCUR.
- NOTE: FOR THE PURPOSE OF THESE INSTRUCTIONS, THE FRONT OF THE HOME REFERS TO THE HITCH END.

1. POSITION MODULE IN ITS DESIRED FINAL LOCATION.
2. ROUGH LEVEL THE MODULE USING THE HITCH JACK AT THE FRONT OF THE MODULE.
3. STARTING WITH ONE SIDE, PLACE THE FIRST JACK JUST FORWARD OF THE FRONT SPRING SHACKLE UNDER THE MAIN I-BEAM AND THE SECOND JACK BEHIND THE AXLES.
4. INSTALL SUPPORT PIERS PER FOUNDATION PLAN.
5. LIFT THE OPPOSITE SIDE OF THE MAIN BEAM AND ROUGH LEVEL BY PLACING PIERS DIRECTLY OPPOSITE THOSE PLACED ON THE FIRST SIDE.
6. COMPLETE THE ROUGH LEVELING BY ADJUSTING SUPPORTS AS REQUIRED.
7. ADDITIONAL PIERS MAY BE PLACED UNDER THE FLOOR JOISTS LOCATED UNDER HEAVY FURNITURE OR EQUIPMENT.
8. ADJUST THE FINAL HEIGHT OF THE MODULE FOUNDATION SUPPORT USING A LEVEL. LEVEL FROM FRONT TO REAR AND SIDE TO SIDE TO OBTAIN A FINAL LEVEL THROUGHOUT THE MODULE.
9. CONNECT ALL TIE DOWN STRAPS TO GROUND ANCHORS. CAUTION: FOR GAS, ELECTRICAL, WATER, ETC. HOOKUPS REFERENCE OTHER DETAILS.
10. A RE-CHECK OF LEVEL AND PIERS SHOULD BE MADE AFTER APPROXIMATELY THIRTY DAYS IN CASE SOME SETTLING HAS OCCURRED. CAUTION: AUTHORIZED SERVICE PERSONNEL WHO ARE FAMILIAR WITH LOCAL REQUIREMENTS SHALL MAKE ALL UTILITY CONNECTIONS.
11. NOTE: IF DRYER IS INSTALLED REFERENCE OTHER DETAILS FOR DRYER DUCT INSTALLATION REQUIREMENTS.
12. THERE ARE TIMES WHEN THE BOTTOM BOARD OF YOUR NEW MODULE MAY BECOME TORN OR CUT FOR VARIOUS REASONS. IN SUCH CASES, SUCH PLACES SHALL BE PATCHED ACCORDING TO THE MANUFACTURERS' INSTALLATION INSTRUCTIONS FOUND IN THE SHIP LOOSE MATERIAL. IF NO INSTRUCTIONS CAN BE FOUND, A PIECE OF 3/8" PLYWOOD SHOULD BE INSTALLED ABOVE THE BOTTOM BOARD. PLACE PATCH OVER THE HOLE AND FASTEN WITH SCREWS INTO THE PLYWOOD.

INSTALLATION OF MODULES WITHOUT CHASSIS

- **PLEASE BE ADVISED WITH THIS TYPE OF INSTALLATION, INSULATION IN THE FLOOR CAVITY MAY HAVE SHIFTED DURING TRANSPORTATION. THIS MAY REQUIRE THE INSTALLATION PERSONAL TO REINSTALL AND ADD SUPPORTS.**
- THE FOLLOWING STEPS SHALL BE FOLLOWED WITH EACH MODULE OF YOUR HOME.
- CAUTION: NO ONE SHALL BE UNDERNEATH THE MODULE WHILE IT IS BEING JACKED UP OR CRANED. SHOULD THE MODULE FALL A SEVERE INJURY COULD OCCUR.

DRIVE THROUGH METHOD

1. PERSONNEL REQUIREMENTS: THIS METHOD WILL REQUIRE A FORMAN FAMILIAR WITH THIS TYPE OF OPERATION ALONG WITH A MINIMUM OF THREE-WORK PERSONS. MANPOWER REQUIREMENTS WILL VARY WITH THE SCOPE OF THE PROJECT.
2. POSITIONING OF MODULES: UPON ARRIVAL OF THE MODULES, POSITION CARRIER CENTERLINE WITH CENTERLINE OF SPACE IN FOUNDATION. DEPENDING UPON SITE CONDITIONS, TRANSPORTER MAY EITHER BACK MODULE INTO SLOT OR PULL DIRECTLY THROUGH.
3. WITH THE MODULES ALIGNED AS CLOSE AS POSSIBLE TO THEIR FINAL POSITION, REMOVE THE LAG BOLTS SECURING THE MODULE TO THE CARRIER FROM BOTH SIDES.
4. JACK UP MODULE TO SUFFICIENT HEIGHT AS NOT TO DAMAGE MODULE AND REMOVE CARRIER.
5. LOWER MODULE INTO PLACE AND ALIGN.
6. INSTALL FOAM SEALING STRIP AROUND ALL OPENINGS BEFORE MODULES ARE PUSHED TOGETHER.

ROLL ON ERECTION METHOD

1. PERSONNEL REQUIREMENTS: THE ROLL-ON ERECTION METHOD WILL REQUIRE A FORMAN FAMILIAR WITH THIS TYPE OF OPERATION ALONG WITH A MINIMUM OF THREE WORK PERSONS. MANPOWER REQUIREMENTS WILL VARY WITH THE SCOPE OF THE PROJECT.
2. POSITIONING OF MODULE: UPON ARRIVAL OF MODULES, POSITION CARRIERS SO THAT EACH ARE NOT MORE THAN 3' FROM LONGEST DIMENSION WALL AND PARALLEL TO IT, ON THE SIDE WHERE ACCESS IS EASIEST. THE FIRST MODULE TO BE SET IS THE ONE THAT ENDS UP THE FURTHEST AWAY FROM STARTING LOCATION. ALIGN THE ENDS OF THE MODULE WITH THE FOUNDATION. LAY OUT AND MARK ON THE MODULES THE POINTS WHERE THE ROLLING STOCK IS TO BE SET UP. THE SAME LOCATIONS MUST BE MARKED ON THE FOUNDATION.
3. SET-UP OF ROLLING STOCK AND PREPARING MODULE: REMOVE THE LAG BOLTS SECURING THE MODULE TO THE TRANSPORTER. RAISE MODULE FROM CARRIAGE WITH JACKS AND BLOCK. SET ROLLER BEAMS UNDER THE MODULE. BLOCK SO THAT THE ROLLER BEAM IS ON THE SAME PLANE AS THE BEAMS IN THE FOUNDATION. INSTALL ADDITIONAL BLOCKING UNDER THE BEAMS SO THAT NO SPAN IS GREATER THAN 12 FEET. POSITION ROLLERS UNDER MODULE. SET JACKS AND POSTS IN THE EXCAVATION FOR RAISING MODULE OFF ROLLERS. MAKE CERTAIN ROLLER BEAMS ARE BRACED AGAINST ANY HORIZONTAL MOVEMENT.
4. MODULE TRANSFER: ROLL MODULE ONTO FOUNDATION AND ALIGN FOR PROPER PLACEMENT. MOVEMENT MAY BE MADE BY THE USE OF A SMALL WINCH ASSEMBLY. THE MODULE CAN BE MOVED BY THREE PERSONS, ONE AT EACH WINCH, ONE CHECKING AND ONE GUIDING THE MODULE.
5. SETTING OF MODULE ON FOUNDATION: ATTACH HYDRAULIC JACKS AND RAISE MODULE OFF ROLLERS, REMOVE ROLLERS AND LOWER ONTO FOUNDATION.
6. REPEAT PROCEDURES FOR THE NEXT MODULE.
7. INSTALL FOAM SEALING STRIP AROUND ALL OPENINGS BEFORE MODULES ARE PUSHED TOGETHER.

CRANE ERECTION METHOD (SPREADER BARS MUST BE USED WITH THIS METHOD)

1. PERSONNEL REQUIREMENTS: THIS METHOD WILL REQUIRE A FORMAN FAMILIAR WITH THIS TYPE OF OPERATION ALONG WITH A MINIMUM OF THREE WORK PERSONS. MANPOWER REQUIREMENTS WILL VARY WITH THE SCOPE OF THE PROJECT
2. POSITIONING OF MODULE: UPON ARRIVAL OF MODULES, POSITION CARRIERS WITHIN A REASONABLE DISTANCE FROM THE CRANE TO PERMIT ATTACHING HARNESS TO BE APPLIED.
3. MARK CENTERLINE OF THE FOUNDATION WHERE MODULES SHOULD LINE UP AND REMOVE THE LAG BOLTS SECURING THE MODULAR TO THE CARRIER FROM BOTH SIDES.
4. DETERMINE THE LIFT POINTS FOR THE HOME. IF POSSIBLE LIFT POINTS LOCATED AT SIDEWALLS SHOULD AVOID GLAZED OPENINGS. LIFT POINTS LOCATED BENEATH THE MARRIAGE LINE SHALL BE LOCATED BENEATH A FULL HEIGHT WALL OR, IF LOCATED IN A MARRIAGE WALL OPENING, A TIGHT-FITTING TEMPORARY SHIPPING WALL SHALL BE INSTALLED DIRECTLY ABOVE THE LIFTING POINT.
5. TYPICALLY THE LIFTING POINTS SHALL BE 1/4 TO 1/3 OF THE LENGTH OF THE MODULE FROM EACH END, OR A MINIMUM OF 10 FT FROM EACH END. VARIABLES THAT MAY AFFECT THE LIFTING LOCATIONS INCLUDE OFFSET FLOORS, HVAC PLACEMENT, PLUMBING LINES, PORCHES, EXISTING RIM RAIL SPLICES, RECESSED ENTRIES, GLAZED OPENINGS, ETC. THE LIFTING FOREMAN SHALL ADJUST THE PICK POINTS AS NECESSARY TO ENSURE THE MODULE IS BEING LIFTED ABOVE ITS CENTER OF GRAVITY.
6. IF THE MODULE EXCEEDS 50 FT IN LENGTH IT IS RECOMMENDED THAT A MINIMUM OF 3 SPREADER BARS BE UTILIZED. THE LIFTING FOREMAN SHALL ADD LIFTING POINTS AS NECESSARY TO ENSURE A BALANCED LIFT AND AS TO NOT EXCEED THE CAPACITY OF THE LIFTING STRAPS, CABLES, HARNESSES AND OTHER LIFTING EQUIPMENT.
7. MAXIMUM 2 1/4" HOLES MAY BE DRILLED IN THE RIM JOISTS FOR CABLE/STRAP ACCESS. THE HOLES SHOULD NOT BE LOCATED WITHIN 2 INCHES OF THE TOP OR BOTTOM EDGE OF THE RIM JOISTS. IF THE HOLES ARE LOCATED WITHIN 2 INCHES OF THE RIM JOIST OR IF NOTCHES ARE UTILIZED RATHER THAN HOLES, THE NOTCH OR HOLE SHOULD BE SUPPORTED BY A CONTINUOUS LOAD-BEARING FOUNDATION WALL OR CONCRETE MASONRY PIER. NOTCHES OR HOLES WITHIN 2 INCHES OF THE BOTTOM EDGE OF THE RIM JOISTS AND NOT SUPPORTED BY A PIER OR FOUNDATION WALL SHALL BE REPAIRED PER DETAIL 3.
8. LIFT POINTS SHALL BE LOCATED A MINIMUM OF 24" FROM EXISTING RIM RAIL SPLICES.
9. AFTER HARNESSES ARE ATTACHED AND ADJUSTED FOR WEIGHT DISTRIBUTION, THE CRANE WILL SET MODULE ON FOUNDATION. TAG LINE ROPES SHALL BE ATTACHED TO ENDS OF MODULAR TO HELP CONTROL THE AMOUNT OF MOVEMENT WHILE THE LOAD IS SUSPENDED.
10. USE (6) JACKS TO RELIEVE WEIGHT OF MODULE FROM FOUNDATION AND SLIDE MODULE ADJACENT TO PREVIOUSLY PLACED MODULE AND FASTEN AS PER PLANS.

SITE-BUILT ADDITIONS AND PORCHES

A SITE-BUILT ADDITION OR PORCH MAY BE CONSTRUCTED ADJACENT TO A MODULAR HOME BUILT BY CMH MANUFACTURING PROVIDED THE ADDITION MEETS THE FOLLOWING MINIMUM CONDITIONS:

1. THE ADDITION MUST BE ENTIRELY SELF-SUPPORTED AND CANNOT RELY ON THE HOME FOR SUPPORT (SUPERFICIAL CONNECTIONS ARE ACCEPTABLE). THE HOME'S STRUCTURAL SYSTEM IS NOT DESIGNED TO SUPPORT THE SUPERIMPOSED LOADS OF THE ADDITION OR PORCH.
2. THE HOME'S STRUCTURAL SYSTEM SHALL NOT BE CUT OR ALTERED IN ANY WAY.
3. ALL JOINTS BETWEEN THE HOME AND THE ADDITION MUST BE PROPERLY SEALED SO THEY ARE WATERTIGHT.
4. THE HOME'S MECHANICAL SYSTEM HAS BEEN SIZED FOR THE HOME ITSELF AND DOES NOT CONSIDER THE HEATING OR COOLING FOR ANY TYPE OF ADDITION.
5. THE ADDITION OR PORCH MUST MEET ALL LOCAL CODES AND STRUCTURAL REQUIREMENTS. THE MANUFACTURER DOES NOT ACCEPT ANY RESPONSIBILITY FOR THE DESIGN OF THE ADDITION OR PORCH.
6. THE ADDITION OR PORCH MUST BE APPROVED BY THE JURISDICTION HAVING AUTHORITY.
7. THE MANUFACTURER WILL NOT HONOR THE WARRANTY FOR ANY PROBLEM THAT RELATES TO THE CONSTRUCTION OF THE ADDITION OR PORCH (LEAK PROBLEMS, ETC).
8. A DORMER ROOF MAY BE INSTALLED ON THE HOME TO MATCH THE ROOF PITCH OF THE ADDITION OR PORCH. THE SHINGLES BELOW THE DORMER MUST BE REMOVED AND THE DORMER MUST BE VENTED PROPERLY. THE DORMER WEIGHT SHALL BE NO MORE THAN 5 PSF AND DISTRIBUTED UNIFORMLY OVER THE ROOF TRUSSES OF THE HOME. CONNECTIONS MAY BE MADE TO ATTACH THE DORMER TO THE HOME, BUT NOT BE USED TO SUPPORT THE ROOF LOADS OF THE ADDITION OR PORCH. THE DORMER SHALL BE SHINGLED AND SEALED PROPERLY TO PREVENT LEAKS (FOLLOW SHINGLE MANUFACTURER'S INSTRUCTIONS AND ARMA GUIDELINES FOR SHINGLE VALLEY APPLICATIONS).

LOCAL PERMITS, INSPECTIONS, WARRANTIES, AND INSTALLATION REQUIREMENTS FOR SITE-INSTALLED ADDITIONS ARE NOT THE RESPONSIBILITY OF CMH MANUFACTURING, INC. OR ITS AFFILIATES. CMH MANUFACTURING, INC. IS PROVIDING THE ABOVE INFORMATION AS AN ACCOMMODATION ONLY AND WITHOUT CONSIDERATION. ACCORDINGLY, CMH MANUFACTURING, INC. EXTENDS NO WARRANTIES OR REPRESENTATION EITHER EXPRESSED OR IMPLIED WITH REGARD TO THE RECOMMENDATIONS HEREIN.

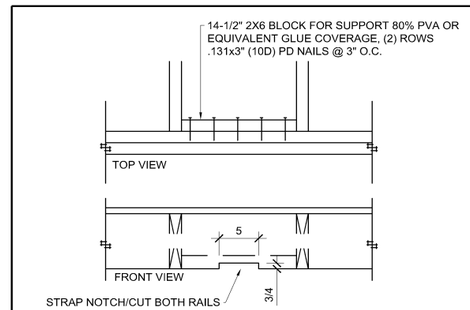

(REF. FL-020.0 DETAIL 7)

3 RIM JOIST STRAP NOTCH REPAIR
SCALE: N.T.S. WIND: ALL ROOF PITCH: ALL

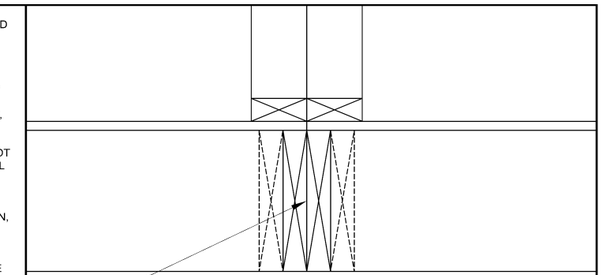

STANDARD FLOOR CONNECTION FOR SINGLE OR DOUBLE RIM JOISTS
CONNECT MATE LINE FLOORS TOGETHER WITH ONE OF THE FOLLOWING OPTIONS.

- 1/2" DIA. BOLTS W/ WASHERS & NUT @ 48" O.C. (PRE-DRILL HOLES)
- 9MM LAG SCREWS @ 48" O.C. MAXIMUM. STAGGER LAGS FROM SIDE TO SIDE. LAGS MUST HAVE A MINIMUM 1-3/4" PENETRATION TO OPPOSITE FLOOR.

1 Floor Connection @ Mate Line
SCALE: 1-1/2"=1'-0" WIND: ALL ROOF PITCH: ALL

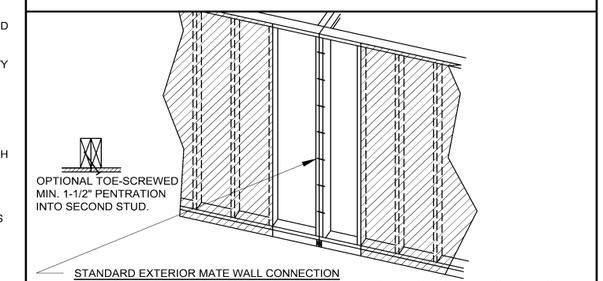

STANDARD EXTERIOR MATE WALL CONNECTION
CONNECT MATE LINE EXTERIOR END WALLS TOGETHER WITH ONE OF THE FOLLOWING OPTIONS.

- #10 WOOD SCREWS TOE-SCREWED AND STAGGERED AT 16" O.C. TO 24" O.C. MUST HAVE 1-1/2" PENETRATION.
- (3) 1/2" DIA. BOLTS W/ WASHER & NUT. (HOLES WILL COME PRE-DRILLED FROM PLANT)
- SINGLE PIECE OF SHEATHING COVERING MATE LINE. FASTENING SHEATHING 3" O.C. EDGE AND 12" O.C. FIELD. FASTENERS MAYBE 8D NAIL OR 7/16" X 15GA STAPLE. MUST HAVE 1" PENETRATION.
- 9MM LAG SCREWS @ 48" O.C. MAXIMUM. START LAGS 24" FROM EACH END AND STAGGER LAGS FROM SIDE TO SIDE. LAGS MUST HAVE A MINIMUM 1-1/2" PENETRATION TO OPPOSITE SIDE.

2 Exterior Wall Connection @ Mate Line
SCALE: N.T.S. WIND: ALL ROOF PITCH: ALL

NORTH CAROLINA PROFESSIONAL SEAL 32861 ENGINEER JAMES W. HARRILL 03/10/201

P.E. SEAL

APPROVED BY
NTA INC. 05/16/2017
Approval of this document does not authorize or approve any deviation or deviations from the requirements of applicable State Laws.

THIRD PARTY SEAL

TITLE: GENERAL INSTALLATION INFORMATION			CMH MANUFACTURING, INC. Home Office 5000 Clayton Road, Maryville, TN 37804 PH: 865.380.3000 FAX: 865.380.3781
DRAWN BY: B.R.	DATE: 6/17/2014		
REVIEWED BY: --	LAST REVISED: 8/29/2016		SHEET: SU-1.0
CHECKED BY: --	CALC REF: --		

APPROVED BY
NTA INC. 7/31/2018
Approval of this document does not authorize or approve any deviation or deviations from the requirements of applicable State Laws.
David Richter

Aug 29, 2016 - 2:41pm W:\ENG\Modular Packages\1One Modular Package\Setup Manuals\Modular Installation Instructions-General Information.dwg

MECHANICAL INSTALLATION INFORMATION

DO NOT ALLOW ANY EXHAUST SYSTEM TERMINATE UNDER THE HOME WHERE EXCESS MOISTURE OR FLAMMABLE MATERIAL CAN ACCUMULATE.

COMFORT COOLING SYSTEMS

ONLY QUALIFIED PERSONNEL SHALL INSTALL ANY COMFORT COOLING SYSTEM NOT PROVIDED WITH THE HOME. FOLLOW THE MANUFACTURER'S INSTALLATION INSTRUCTIONS AND CONFORM TO ALL LOCAL CODES.

AIR CONDITIONERS

THE AIR DISTRIBUTION SYSTEM OF THIS HOME HAS BEEN DESIGNED FOR A CENTRAL AIR CONDITIONING SYSTEM. SITE-INSTALLED EQUIPMENT MUST NOT EXCEED THE RATING SHOWN ON THE HOME'S COMPLIANCE CERTIFICATE.

THE HOME'S ELECTRICAL DISTRIBUTION PANEL MAY CONTAIN OPTIONAL FACTORY INSTALLED CIRCUITS FOR AIR CONDITIONING. THE MAXIMUM FULL LOAD AMPERE DRAW FOR THE DESIRED AIR CONDITIONING UNIT MUST NOT EXCEED THE CIRCUIT RATING SHOWN. IN ADDITION, ELECTRICAL CIRCUITS WITHIN THE HOME MAY NOT HAVE BEEN SIZED FOR THE ADDITIONAL LOAD OF NON-FACTORY INSTALLED AIR CONDITIONING, AND A SEPARATE, OUTSIDE ELECTRICAL SUPPLY MAY HAVE TO BE PROVIDED.

ANY FIELD-INSTALLED WIRING BEYOND THE JUNCTION BOX MUST INCLUDE A DISCONNECT FUSE LOCATED WITHIN SIGHT OF THE CONDENSING UNIT. THE MAXIMUM FUSE SIZE IS MARKED ON THE CONDENSER DATA PLATE. LOCAL CODES WILL DETERMINE THE ACCEPTABILITY OF THE AIR CONDITIONING EQUIPMENT, RATING, LOCATION, DISCONNECT MEANS, FUSE TYPE BRANCH CIRCUIT PROTECTION, AND CONNECTIONS TO THE EQUIPMENT. 'A' COIL AIR CONDITIONING UNITS MUST BE COMPATIBLE AND LISTED FOR USE WITH THE FURNACE IN THE HOME. FOLLOW THE AIR CONDITIONER MANUFACTURER'S INSTRUCTIONS.

IF A REMOTE (SELF-CONTAINED, PACKAGE) AIR CONDITIONER (COOLING COIL AND BLOWER LOCATED OUTSIDE THE HOME) IS TO BE CONNECTED TO THE HEATING SUPPLY DUCT, INSTALL AN AUTOMATIC DAMPER BETWEEN THE FURNACE AND THE HOME'S AIR DUCT SYSTEM AND ANOTHER BETWEEN THE REMOTE UNIT AND THE HOME'S AIR DUCT SYSTEM. SECURE THE DUCT SYSTEM LEADING FROM THE REMOTE UNIT TO THE HOME AND DO NOT ALLOW IT TO TOUCH THE GROUND. INSULATE DUCTS WITH MATERIAL HAVING AN 'R' VALUE OF NOT LESS THAN 8, AND A PERM RATING OF NOT LESS THAN 1. CONNECT THE DUCT CARRYING AIR TO THE HOME TO THE MAIN DUCT AT A POINT WHERE THERE ARE APPROXIMATELY AS MANY REGISTERS FORWARD OF THE CONNECTION AS THERE ARE TO THE REAR. LOCATE THE RETURN AIR DUCT IN THE CENTER OF THE HOME.

DO NOT CUT OR DAMAGE FLOOR JOISTS. REPLACE INSULATION REMOVED DURING THE INSTALLATION, AND SEAL THE BOTTOM BOARD AROUND THE DUCT CONNECTIONS.

ALL CONDENSATION PIPING FOR THE HVAC SYSTEM MUST BE INSTALLED ON SITE BY OTHERS. THIS CONDENSATE PIPE CAN EITHER BE DIRECTED TO THE EXTERIOR OF THE HOME OR CONNECTED TO THE HOMES DWV PLUMBING SYSTEM. IF CONNECTING TO THE DWV PLUMBING SYSTEM, NO EXTERNAL TRAP SHOULD BE USED AS THE FURNACE CONTAINS AN INTERNAL TRAP.

HVAC CROSSOVER DUCT INSTALLATION

CROSSOVER DUCTS TO BE INSULATED WITH A MATERIAL HAVING A MINIMUM R-8 VALUE.

DUCT MUST BE SUPPORTED SO IT DOES NOT TOUCH THE GROUND.

HEAT PUMPS

INSTALL HEAT PUMPS ACCORDING TO THE MANUFACTURER'S INSTRUCTIONS.

FURNACE DE-RATION

IF YOUR HOME IS LOCATED AT 4500 FEET OR MORE ABOVE SEA LEVEL OR AS INDICATED IN THE MANUFACTURER'S INSTRUCTIONS, YOUR GAS FURNACE MUST BE DE-RATED FOR THE ALTITUDE. THIS MUST BE DONE BY A QUALIFIED SERVICE PERSON. A LICENSED TECHNICIAN MAY BE REQUIRED. CHECK WITH YOUR LOCAL AUTHORITIES.

CAUTION!
FAILURE TO DE-RATE THE FURNACE CAN CAUSE THE FURNACE TO OVERHEAT, OPERATE POORLY AND CAUSE EXCESSIVE SOOT. DANGEROUS LEVELS OF CARBON MONOXIDE COULD ACCUMULATE IN THE HOME.

FIREPLACE

FIREPLACE MANUFACTURER'S INSTRUCTIONS WILL BE SHIPPED WITH THE HOME.

FIREPLACE AND WOOD STOVES REQUIRE ON SITE INSTALLATION OF ADDITIONAL SECTIONS OF APPROVED LISTED CHIMNEY PIPE, SPARK ARRESTOR AND RAIN CAP ASSEMBLY.

CHIMNEY MUST BE INSTALLED TO A MINIMUM EXTENSION ABOVE ROOF TO ASSURE SUFFICIENT DRAFT FOR PROPER OPERATION. EXTEND THE FINISHED CHIMNEY AT LEAST 3' ABOVE THE HIGHEST POINT WHERE IT PENETRATES THE ROOF AND AT LEAST 2' HIGHER THAN ANY SURFACE WITHIN 10' OF THE CHIMNEY. THE INSTALLER MAY HAVE TO PROVIDE AN ADDITIONAL SECTION OF CHIMNEY PIPE IF REQUIRED BY LOCAL CODES.

THE REQUIRED COMPONENTS OF A CORRECTLY INSTALLED CHIMNEY ARE AS SHOWN ON MANUFACTURER'S INSTALLATION INSTRUCTIONS.

ASSEMBLE AND SEAL YOUR FIREPLACE OR WOOD STOVE CHIMNEY PER FIREPLACE MANUFACTURER'S INSTALLATION INSTRUCTIONS.

COMBUSTION AIR DUCT INLETS (FIREPLACE OR WATER HEATER)

COMBUSTION AIR INTAKE DUCTS END JUST BELOW THE BOTTOM COVERING OF THE FLOOR. YOU MUST EXTEND THEM TO THE OUTSIDE WHEN YOUR HOME HAS A BASEMENT OR CRAWL SPACE. THESE ADDED DUCTS ARE SUPPLIED OR MAY BE PURCHASED AT YOUR LOCAL HARDWARE STORE OR HOME CENTER. THE FIREPLACE MANUFACTURER'S INSTRUCTIONS FOR INSTALLING COMBUSTION AIR DUCTS ARE IN THE FIREPLACE/STOVE OR WITH THE CHIMNEY PARTS. DO NOT ALLOW THE COMBUSTION AIR INLET TO DROP MATERIAL FROM THE HEARTH BENEATH THE HOME. LOCATE ITS INLET DAMPER ABOVE EXPECTED SNOW LEVEL.

GAS DRYER INSTALLATION

IF THE HOME DID NOT COME EQUIPPED WITH A GAS DRYER, REMEMBER THAT INSTALLING ONE REQUIRES SUBSTANTIAL ALTERATION TO THE HOME. YOU MUST PROVIDE GAS SUPPLY PIPING AND ADEQUATE VENTING AS SPECIFIED BY THE GAS DRYER MANUFACTURER. ONLY A TRAINED AND EXPERIENCED PERSON SHOULD INSTALL A GAS DRYER. CUTTING MAJOR STRUCTURAL ELEMENTS (SUCH AS RAFTERS AND JOISTS) TO ALLOW FOR GAS DRYER INSTALLATION IS NOT PERMISSIBLE. CMH MANUFACTURING IS NOT RESPONSIBLE FOR ANY WEAKENING OF THE HOME'S STRUCTURAL SOUNDNESS RESULTING FROM DRYER INSTALLATION.

DRYER DUCT INSTALLATION

THE DRYER EXHAUST DUCT IS TO BE INSTALLED SO THAT NO PART OF THE DUCT IS IN CONTACT WITH THE GROUND. THE DRYER EXHAUST DUCT IS TO RUN TO THE OUTSIDE OF THE HOME AND SHALL NOT TERMINATE UNDERNEATH THE UNIT AND BE LOCATED NOT LESS THAN 12 INCHES ABOVE FINISHED GRADE. AN APPROVED BACK DRAFT DAMPER SHALL BE INSTALLED ON THE END OF THE DUCT. DRYER EXHAUST DUCTS NOT DESIGNED FOR A SPECIFIC DRYER SHALL BE CONSTRUCTED OF MINIMUM 0.0157 INCH GALVANIZED STEEL OR OTHER NONCOMBUSTIBLE MATERIAL OF EQUIVALENT STRENGTH AND CORROSION RESISTANCE. DUCTS SHALL HAVE A SMOOTH INTERIOR FINISH WITH JOINTS RUNNING IN THE DIRECTION OF AIRFLOW. ANY AIR GAPS FROM PENETRATIONS THROUGH THE BUILDING ENVELOPE SHALL BE CAULKED, GASKETED, WEATHER-STRIPPED, WRAPPED, OR OTHERWISE SEALED TO LIMIT UNCONTROLLED AIR MOVEMENT. MINIMUM SIZE OF EXHAUST DUCTS SHALL BE 4 INCHES INTERIOR DIAMETER. MAXIMUM LENGTH OF RIGID METAL DUCTS SHALL NOT EXCEED 35 FEET FROM DRYER LOCATION TO WALL OR ROOF CAP WITH DEDUCTIONS IN DUCT LENGTHS FOR 45 AND 90 DEGREE BENDS. TRANSITION DUCTS SHALL BE METAL, LIMITED TO 8 FEET LENGTH, AND LISTED AND LABELED FOR THE APPLICATION. TRANSITION DUCTS MUST REMAIN ENTIRELY WITHIN THE ROOM THE APPLIANCE IS INSTALLED. THIS DETAIL DOES NOT APPLY TO COMMERCIAL CLOTHES DRYER INSTALLATION.

VENTING (GAS/OIL FURNACES AND/OR WATER HEATERS)

MANUFACTURER'S INSTRUCTIONS WILL BE SHIPPED WITH THE HOME.

SOME VENTING MAY REQUIRE ON SITE INSTALLATION OF ADDITIONAL SECTIONS. THE MANUFACTURER'S INSTRUCTION MUST BE FOLLOWED WHEN INSTALLING THIS PIPING.

THE INSTALLER MAY HAVE TO PROVIDE AN ADDITIONAL SECTION OF PIPE IF REQUIRED BY LOCAL CODES.

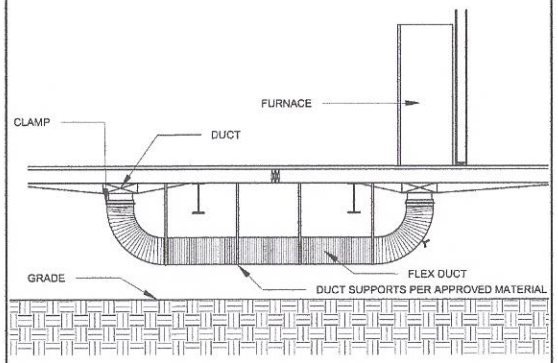

1 STD. FLOOR CROSSOVER CONNECTION
SCALE: N.T.S.

PROCEDURE:
1. LOCATE DUCT COLLARS THAT EXTEND BELOW THE BOTTOM BOARD MATERIAL ON EACH SECTION. REMOVE SHIPPING CLOSE-UP MATERIAL FROM COLLARS.
2. PULL VINYL COVERING BACK FROM DUCT AND SLIDE EXPOSED END OVER DUCT COLLAR AND UP AGAINST BOTTOM BOARD MATERIAL.
3. FASTEN DUCT TO COLLAR WITH 3 SHEET METAL SCREWS APPROXIMATELY EQUALLY SPACED AROUND THE COLLAR.
4. ADD METAL OR PLASTIC TIE STRAP AROUND DUCT AND SECURE TIGHTLY. IF METAL STRAP IS USED, SECURE WITH SHEET METAL SCREW.
5. AFTER DUCT IS FASTENED TO COLLAR PULL VINYL COVERING OVER CONNECTIONS AND FLUSH TO THE BOTTOM BOARD MATERIAL.
6. WRAP THE TOP OF THE VINYL COVER AROUND THE COLLAR AT LEAST TWO TIMES WITH DUCT TAPE.
7. REPEAT STEPS 1 THRU 6 AT COLLAR ON OTHER SECTION OR SECTIONS OF THE HOME. SOME HOMES MAY REQUIRE THE CONNECTION OF A METAL V-BOX ADAPTER OR VINYL FLEX Y-BRANCH AT THE COLLAR UNDER THE FURNACE.

4 STANDARD DUCT CONNECTION
SCALE: N.T.S.

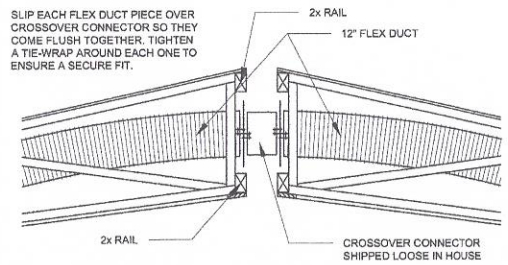

2 STD. CEILING CROSSOVER CONNECTION
SCALE: N.T.S.

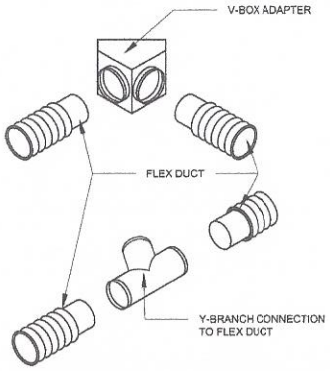

5 OTHER CROSSOVER CONNECTIONS
SCALE: N.T.S.

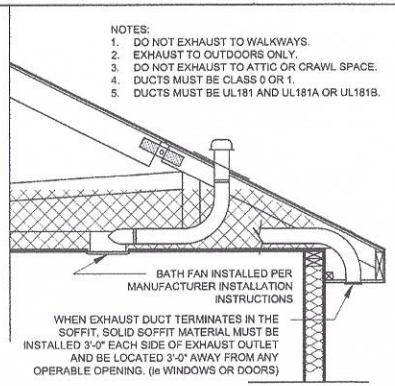

4 BATH FAN EXHAUST
SCALE: N.T.S. DETAIL IS APPLICABLE FOR SITE INSTALLATION

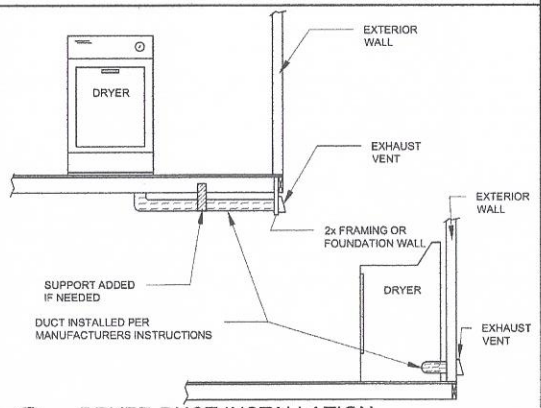

3 DRYER DUCT INSTALLATION
SCALE: N.T.S.

P.E. SEAL

THIRD PARTY SEAL

TITLE: MECHANICAL INSTALLATION INFORMATION			CMH MANUFACTURING, INC. Home Office 5000 Clayton Road, Maryville, TN 37804 PH: 865.380.3000 FAX: 865.380.3781
DRAWN BY: B.R.	DATE: 10/8/2010		
REVIEWED BY: --	LAST REVISED: 9/24/2014		SHEET: SU-3.0
CHECKED BY: --	CALC REF: --		

Sep 24, 2014 - 2:07pm W:\ENG\Modular Packages\1One Modular Package\Setup Manuals\Modular Installation Instructions-Mechanical.dwg

ELECTRICAL INSTALLATION INFORMATION

GENERAL

BECAUSE OF THE IMPORTANCE OF PROPER ELECTRICAL CONNECTIONS IT IS ADVISABLE TO HAVE ONLY A QUALIFIED ELECTRICIAN WORK ON THE ELECTRICAL SYSTEM OF YOUR UNIT.

ALUMINUM CONDUCTORS SHALL NOT BE USED.

ELECTRICAL CABLES SHALL BE SECURED IN PLACE AT INTERVALS NOT EXCEEDING 4-1/2 FEET AND WITHIN 12 INCHES FROM EVERY CABINET, BOX OR FITTING.

METALLIC FACE PLATES SHALL BE EFFECTIVELY GROUNDED.

APPLIANCES CONNECTED BY METAL-CLAD CABLE OR FLEXIBLE CONDUIT SHALL HAVE AT LEAST 3 FEET OF FREE CABLE OR CONDUIT TO PERMIT MOVING THE APPLIANCE.

SWITCHES SHALL BE ADEQUATELY RATED FOR LOAD CONTROL.

AT LEAST 6 INCHES OF FREE CONDUCTOR, MEASURED FROM THE POINT IN THE BOX WHERE IT EMERGES FROM ITS RACEWAY OR CABLE SHEATH, SHALL BE LEFT AT EACH OUTLET, JUNCTION, AND SWITCH POINT FOR SPLICES OR THE CONNECTION OF LUMINARIES OR DEVICES. WHERE THE OPENING TO AN OUTLET, JUNCTION, OR SWITCH POINT IS LESS THAN 8 INCHES IN ANY DIMENSION, EACH CONDUCTOR SHALL BE LONG ENOUGH TO EXTEND AT LEAST 3 INCHES OUTSIDE THE OPENING.

EXPOSED WIRING OUTSIDE THE HOME SHALL BE IN CONDUIT.

NO WIRING TO BE INSTALLED IN THE RETURN AIR PLENUMS.

SERVICE EQUIPMENT SHALL BE SUITABLE FOR THE SHORT CIRCUIT (FAULT) CURRENT AVAILABLE AT ITS SUPPLY TERMINALS. NEC SECTION 230-65.

ALL RECEPTACLES TO BE GROUNDING TYPE.

ALL WIRING TO BE PER NEC WITH TYPE NM ROMEX (CU) WITH GROUND.

DISCONNECTING MEANS TO BE LOCATED WITHIN SIGHT OR ABLE TO BE LOCKED OUT OF ALL MOTORS.

WEATHER-PROOF PROTECTION REQUIRED FOR ALL OUTDOOR LIGHTS, RECEPTACLES AND DISCONNECTS.

PROPER WORKING CLEARANCES TO BE PROVIDED AND MAINTAINED AROUND ALL ELECTRICAL EQUIPMENT.

ALL EQUIPMENT TO BE LISTED AND INSTALLED IN ACCORDANCE WITH ITS LISTING.

MODULE INTERCONNECTION

MULTI-SECTION UNITS WILL HAVE THE ELECTRICAL CROSSOVERS LOCATED EITHER IN THE FLOOR NEAR THE MARRIAGE LINE OR IN THE ENDWALLS NEAR THE CENTER OF THE UNIT. LOCATE THE JUNCTION BOXES AND CONNECT THE CONDUCTORS TOGETHER. THE CONDUCTORS SHOULD BE COLOR CODED OR MARKED FOR EASY IDENTIFICATION.

DO NOT INTERCONNECT CIRCUITS OR CROSS CONDUCTORS. ALL WIRE CONNECTIONS SHOULD BE DONE INSIDE THE JUNCTION BOXES OR WITH SELF-CONTAINED DEVICES.

COPPER LEADER CONDUCTOR SIZES NO. 3 MAY BE REPLACED BY NO. 2, NO. 1 MAY BE REPLACED BY NO. 1/0 AND NO. 1/0 MAY BE REPLACED BY NO. 2/0.

ROUTE WIRES AS INDICATED ON THE DETAIL.

CONNECT MALE WIRE CONNECTOR INTO FEMALE WIRE CONNECTOR IN THE FLOOR CAVITY.

USE BOTH SCREWS FROM THE MALE CONNECTOR TO JOIN BOTH CONNECTORS.

COVER AREA WITH INSULATED ACCESS PANELS. FLOOR CROSSOVER ONLY.

OTHER TYPES OF SPLICE CONNECTORS MAY BE USED, REFER TO INSTALLATION INSTRUCTIONS.

CONNECTORS FROM EACH HALF TO BE IDENTIFIED FOR PROPER CONNECTION AT SETUP.

FLOOR JOIST NOTCHES AND HOLES ARE TO BE MADE IN ACCORDANCE WITH IRC SECTIONS R502.8 THRU R502.8.2.

OTHER APPROVED BOTTOM BOARD ACCESS METHODS MAY BE USED AND MUST MAINTAIN PROPER INSULATION COVERAGE. FLOOR CROSSOVER ONLY.

SERVICE INSTALLATION

ALL ELECTRICAL MATERIALS AND CONSTRUCTION MUST BE IN ACCORDANCE WITH THE NEC NFPA 70.

ALL ELECTRICAL EQUIPMENT TO BE UL LISTED OR TESTED BY INDEPENDENT LABORATORIES IN COMPLIANCE WITH UL STANDARDS.

SERVICE DROP CLEARANCES ABOVE ROOF AND GROUND MUST COMPLY WITH SECTION 230-24 OF THE NEC.

ELECTRICAL WIRES INSTALLED WITHIN 6'-0" OF ATTIC ACCESS MUST BE INSTALLED PER SECTION 320-23 AND 330-23 OF THE NEC.

WIRES TO BE FASTENED 4' O.C., 12" FROM METAL BOX AND 8" FROM NON-METAL BOXES.

ALL SITE INSTALLED ITEMS ARE DESIGNED BY OTHERS AND SUBJECT TO THE APPROVAL OF THE LOCAL JURISDICTION.

APPROVED BY NTA INC. 7/31/2018

Approval of this document does not authorize or approve any deviation or deviations from the requirements of applicable State Laws.

David Richter

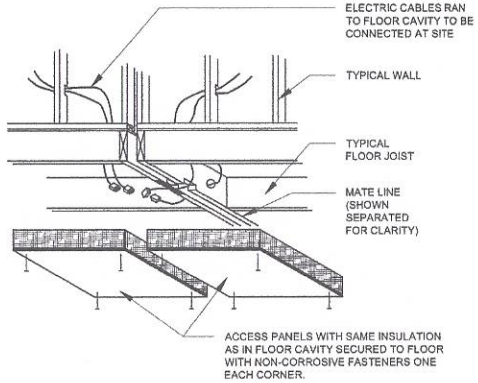

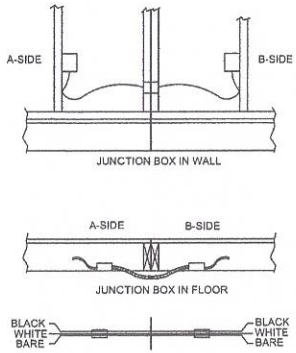

3 TYPICAL ELECTRICAL CROSSOVERS
SCALE: N.T.S.

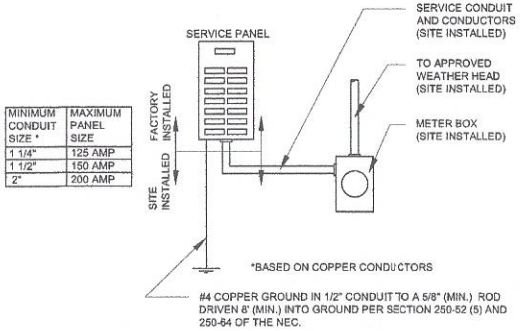

MINIMUM CONDUIT SIZE *	MAXIMUM PANEL SIZE
1 1/4"	125 AMP
1 1/2"	150 AMP
2"	200 AMP

1 TYPICAL ELECTRICAL SERVICE
SCALE: N.T.S.

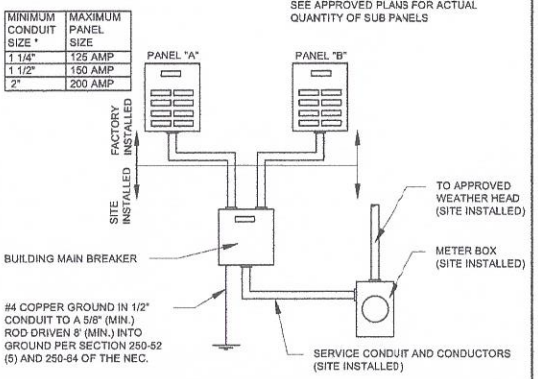

MINIMUM CONDUIT SIZE *	MAXIMUM PANEL SIZE
1 1/4"	125 AMP
1 1/2"	150 AMP
2"	200 AMP

2 TYPICAL MULTI-PANEL ELECTRICAL SERVICE
SCALE: N.T.S.

FEEDER SIZE (SEE MAIN BREAKER AND LABEL ON DIS-TRIBUTION PANEL) (AMPS)	MINIMUM SIZES			FEEDER CONDUCTOR SIZES						MAX. CALCULATED NEUTRAL FEEDER LOAD (AMPS)
	JUNCTION BOX (IN.)	FLEX CONDUIT (IN.)		COPPER CONDUCTORS			ALUMINUM CONDUCTORS			
		COPPER CONDUCTORS	ALUMINUM CONDUCTORS	RED & BLACK (POWER)	WHITE (NEUTRAL)	GREEN (GROUNDING)	RED & BLACK (POWER)	WHITE (NEUTRAL)	GREEN (GROUNDING)	
50	10x10x4	1	1	NO. 6 THW	NO. 5 THW	NO. 8 THW	NO. 8 THW	NO. 8 THW	NO. 8 THW	50
100	10x10x4	1 1/2	1 1/2	NO. 3 THW	NO. 3 THW	NO. 8 THW	NO. 1 THW	NO. 1 THW	NO. 6 THW	100
125	12x12x6	1 1/2	2	NO. 1 THW	NO. 3 THW	NO. 8 THW	NO. 2/0 THW	NO. 1/0 THW	NO. 4 THW	115
150	12x12x6	1 1/2	2	NO. 1/0 THW	NO. 2 THW	NO. 8 THW	NO. 3/0 THW	NO. 1/0 THW	NO. 4 THW	115
200	12x12x6	2	2	NO 3/0 THW	NO. 2 THW	NO. 8 THW	250 MCM	NO. 1/0 THW	NO. 4 THW	115

4 ELECTRICAL FEEDERS AND EQUIPMENT SIZES
SCALE: N.T.S.

APPROVED BY NTA INC. 09/11/2014

Approval of this document does not authorize or approve any deviation or deviations from the requirements of applicable State Laws.

P.E. SEAL

THIRD PARTY SEAL

TITLE: ELECTRICAL INSTALLATION INFORMATION

CMH MANUFACTURING, INC. Home Office 5000 Clayton Road, Maryville, TN 37804 PH: 865.380.3000 FAX: 865.380.3781

DRAWN BY: B.R.	DATE: 10/18/2010		
REVIEWED BY:	LAST REVISED: 6/17/2014	SHEET:	SU-4.0
CHECKED BY:	CALC REF:		

Jul 16, 2014 - 10:22am C:\Users\russell\appdata\local\temp\AcPublish_2068\Modular Installation Instructions-Electrial.dwg

PLUMBING INSTALLATION INFORMATION

GENERAL

THE FOLLOWING INSTRUCTIONS ARE PROVIDED FOR USE IN COMPLETING THE INSTALLATION OF THE PLUMBING SYSTEMS IN THE CORRECT MANNER. PLEASE REVIEW THE INFORMATION PROVIDED BEFORE STARTING WORK TO FAMILIARIZE YOURSELF WITH PROPER SEQUENCE OF INSTALLATION.

BECAUSE OF THE IMPORTANCE OF PROPER PLUMBING CONNECTIONS IT IS ADVISABLE TO HAVE ONLY A QUALIFIED PLUMBER WORK ON THE PLUMBING SYSTEM OF YOUR UNIT.

ALL PLUMBING MATERIAL, DEVICES, FIXTURES, FITTINGS, EQUIPMENT, APPLIANCES AND ACCESSORIES INSTALLED SHALL BE LISTED OR CERTIFIED BY AN APPROVED LISTING AGENCY (NSF, LAPMO, GPT, ETC.) OR SHALL BE SPECIFICALLY APPROVED.

ALL VALVES, PIPES AND FITTINGS SHALL BE INSTALLED IN CORRECT RELATIONSHIP TO THE DIRECTION OF FLOW.

ALL PIPING, PIPE THREADS, HANGERS AND SUPPORTS WHICH ARE EXPOSED TO THE WEATHER, WATER, MUD AND/OR ROAD DAMAGE SHALL BE ADEQUATELY PROTECTED FROM DETERIORATION AND OR DAMAGE DURING TRANSIT.

PIPING SHALL BE INSTALLED WITHOUT UNDUE STRAIN AND STRESS WITH PROVISION FOR EXPANSION, CONTRACTION AND STRUCTURAL SETTLEMENT.

WASTE LINES

BEFORE YOU BEGIN

LOCATE THE DRAIN WASTE PLUMBING SCHEMATIC. REVIEW THE LAYOUT.

CHECK ALL LOOSE PLUMBING PARTS SUPPLIED BY LAYING THEM OUT ON THE GROUND UNDER THE HOME IN THEIR CORRECT RELATIONSHIP ACCORDING TO THE DRAIN WASTE SCHEMATIC. ALL PIPING AND FITTINGS SHOULD BE USED WHERE INDICATED TO ENSURE THE CORRECT FLOW OF WASTE IN THE ASSEMBLED DRAIN SYSTEM.

DWV MATERIAL TO BE ABS OR PVC.

PLASTIC PIPING SHALL BE SUPPORTED AT 4 FOOT INTERVALS UNLESS OTHERWISE STATED IN THE APPLICABLE MATERIAL STANDARDS OR BY THE PIPING MANUFACTURER.

CLEAN-OUTS SHALL BE ACCESSIBLE THROUGH AN UNOBSTRUCTED MINIMUM CLEARANCE OF 12 INCHES DIRECTLY IN FRONT OF THE OPENING. THE MINIMUM SPACE SHALL BE NOT LESS THAN 12 INCHES FOR PIPES LESS THAN 3 INCHES AND 18 INCHES FOR PIPES 3 INCHES AND LARGER.

A FULL SIZE CLEAN-OUT SHALL BE INSTALLED AT THE UPPER END OF ANY SECTION OF DRAIN PIPING WHICH DOES NOT HAVE THE REQUIRED MINIMUM SLOPE OF 1/4 INCH PER FOOT GRADE, BUT HAS AT LEAST 1/8 INCH PER FOOT GRADE.

VENT PIPES SHALL EXTEND THROUGH THEIR FLASHING AND TERMINATE VERTICALLY NOT LESS THAN 6 INCHES ABOVE THE ROOF OR AS AMENDED BY STATE OR LOCAL CODES.

PORTIONS OF THE DRAIN WASTE SYSTEM WHICH ARE BELOW THE FLOOR MAY NOT HAVE BEEN INSTALLED AT THE MANUFACTURING FACILITY DUE TO THE POSSIBILITY OF DAMAGE TO THE SYSTEM DURING TRANSIT. ALL MATERIALS REQUIRED TO COMPLETE THE SYSTEM HAVE BEEN FURNISHED BY THE MANUFACTURING FACILITY AND ARE SHIPPED AS LOOSE ITEMS IN THE HOME.

SUPPLY LINES

WATER SUPPLY AND DISTRIBUTION PIPING SHALL BE LISTED AND APPROVED FOR POTABLE WATER SYSTEMS.

WATER HAMMER IN THE WATER SUPPLY SYSTEMS RESULTING FROM QUICK-CLOSING VALVES WILL BE PREVENTED BY INSTALLING EITHER AIR CHAMBERS OR HYDRAULIC SHOCK ARRESTORS, COMPLYING WITH ASSE STANDARD 1010.

ALL WATER PIPING LOCATED IN CRAWL SPACES OR OTHER LOCATIONS SUBJECT TO FREEZING SHALL BE PROTECTED.

CHECK WATER AND DRAIN LINES FOR ANY CONNECTIONS THAT MAY HAVE COME LOOSE DURING SHIPMENT.

SHOULD YOUR UNIT NOT BE EQUIPPED WITH A MASTER SHUT-OFF VALVE, ONE MUST BE INSTALLED BETWEEN THE UNIT AND THE WATER SUPPLY.

THE WATER SUPPLY SYSTEM IS DESIGNED FOR A MAXIMUM INLET WATER PRESSURE OF 80 PSI. IF THE LOCAL WATER SUPPLY PRESSURE TO WHICH THE UNIT IS BEING CONNECTED EXCEEDS 80 PSI, A PRESSURE REDUCING VALVE MUST BE INSTALLED TO LIMIT THE PRESSURE.

CHECK WITH LOCAL WATER DISTRICT, A PRESSURE REDUCING VALUE AND BACKFLOW PREVENTER MAY NEED TO BE INSTALLED ON THE SUPPLY INLET.

WATER HEATER

CAUTION: DO NOT TURN THE POWER ON TO THE WATER HEATER UNTIL THE TANK IS FULL OF WATER.

WATER HEATERS SHALL BE PROVIDED WITH A COLD WATER "DIP" TUBE WITH A HOLE AT THE TOP OR A VACUUM RELIEF VALVE INSTALLED IN THE COLD WATER SUPPLY LINE ABOVE THE TOP OF THE WATER HEATER TANK. BOTTOM FED WATER HEATERS SHALL HAVE A VACUUM RELIEF VALVE INSTALLED.

WATER HEATERS SHALL BE PROVIDED WITH A TEMPERATURE AND PRESSURE RELIEF VALVE INSTALLED IN THE SHELL OF THE WATER HEATER TANK OR MAY BE INSTALLED IN THE HOT WATER OUTLET PROVIDED THE THERM-BULB EXTENDS INTO THE SHELL OF THE TANK.

WATER HEATER MUST BE TESTED, CERTIFIED AND LABELED AS HAVING A PERFORMANCE EFFICIENCY EQUAL TO OR EXCEEDING ANSI/ASHRAE/IES 90A. EXCEPTION: WATER HEATERS LESS THAN 20 GALLON CAPACITY.

APPROVED BY
NTA INC. 7/31/2018
Approval of this document does not authorize or approve any deviation or deviations from the requirements of applicable State Laws.
David Richter

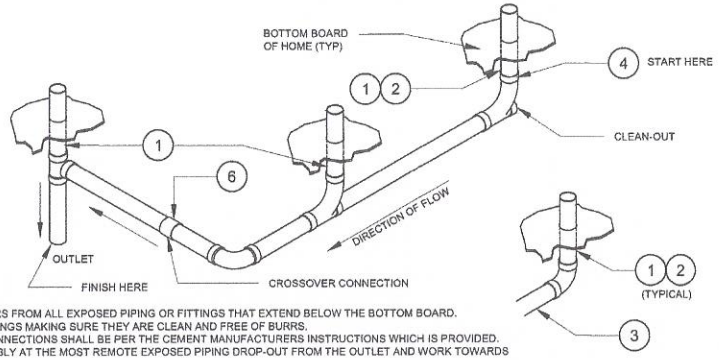

PROCEDURE:

1. REMOVE SHIPPING COVERS FROM ALL EXPOSED PIPING OR FITTINGS THAT EXTEND BELOW THE BOTTOM BOARD.
2. INSPECT PIPING AND FITTINGS MAKING SURE THEY ARE CLEAN AND FREE OF BURRS.
3. ALL PIPE AND FITTING CONNECTIONS SHALL BE PER THE CEMENT MANUFACTURERS INSTRUCTIONS WHICH IS PROVIDED.
4. START THE DRAIN ASSEMBLY AT THE MOST REMOTE EXPOSED PIPING DROP-OUT FROM THE OUTLET AND WORK TOWARDS THE OUTLET LOCATION.
5. IT IS RECOMMENDED THAT TEMPORARY BLOCKING OR SUPPORT BE USED FOR THE ASSEMBLED DRAIN PIPING AS YOU PROCEED TO ACHIEVE A SLOPE TOWARDS THE OUTLET OF AT LEAST 1/4" PER FOOT.
6. IF A CROSSOVER CONNECTION IS REQUIRED USE ONE OF THE METHODS EXPLAINED PREVIOSLY IN THIS CHAPTER.
7. WHEN ALL CONNECTIONS HAVE BEEN COMPLETED RELOCATE THE TEMPORARY SLOPE BLOCKING TO NO MORE THAN 4 FEET APART FOR PERMANENT DRAIN PIPING SUPPORT.

1 TYPICAL WASTE LINE

SCALE: N.T.S.

PROCEDURE:

1. REMOVE ACCESS PANEL FROM EACH SECTION
2. CONNECT THE HOT AND COLD WATER PIPES USING THE CONNECTORS INSTALLED ON THE ENDS OF THE PIPE. THE CONNECTOR FITTINGS ARE DESIGNED TO BE USED WITH -OUT ANY LUBRICANTS OR SEALANTS.
3. REPOSITION THE INSULATION AROUND THE PIPES AND REPLACE THE ACCESS PANELS.

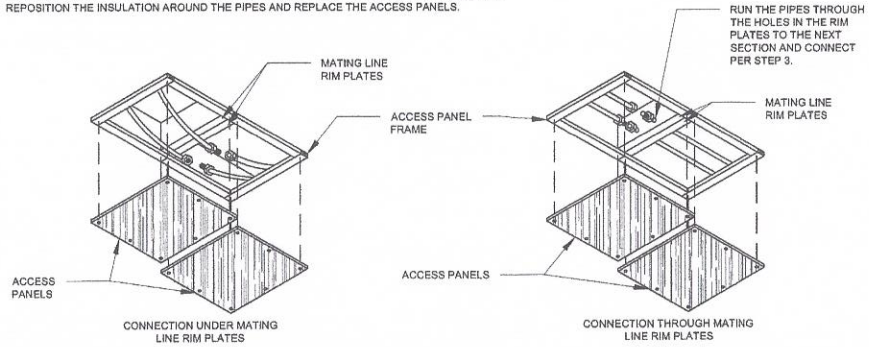

2 TYPICAL SUPPLY CROSSOVER CONNECTION

SCALE: N.T.S.

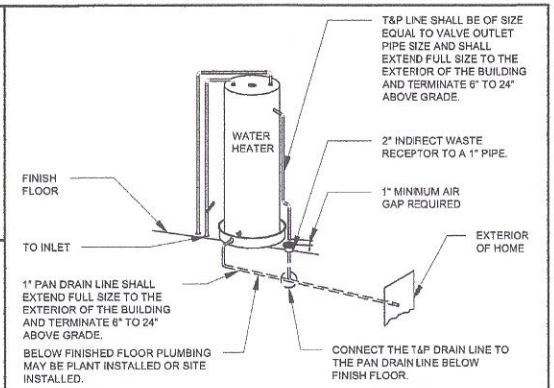

3 TYPICAL WATER HEATER DRAIN

SCALE: N.T.S.

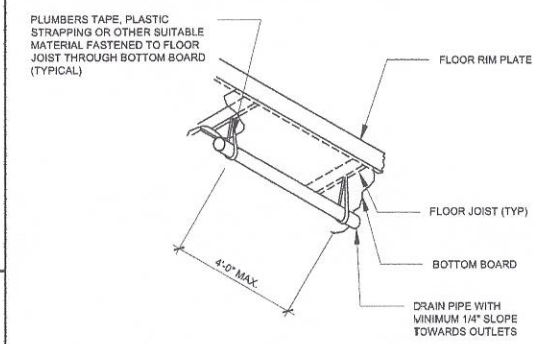

4 TYPICAL WASTE LINE SUPPORT

SCALE: N.T.S.

APPROVED BY
NTA INC. 09/11/2014
Approval of this document does not authorize or approve any deviation or deviations from the requirements of applicable State Laws.

P.E. SEAL | THIRD PARTY SEAL

TITLE: PLUMBING INSTALLATION INFORMATION			CMH MANUFACTURING, INC. Home Office 5000 Clayton Road, Maryville, TN 37804 PH: 865.380.3000 FAX: 865.380.3781
DRAWN BY: B.R.	DATE: 10/18/2010		
REVIEWED BY:	LAST REVISED: 6/17/2014		SHEET: SU-5.0
CHECKED BY:	CALC REF:		

Jul 16, 2014 - 10:24am C:\Users\russell\appdata\local\temp\AcPublish_20668\Modular Installation Instructions-Plumbing.dwg

PROTECTION OF GLAZED OPENINGS DURING HURRICANES

In the event of a hurricane it is recommended that the home owner take precautions to protect glazed window and door openings from windborne debris. One of the best ways to protect a home from damage in windstorms is to install wood structural panels over all large windows and glass doors. This document provides information for two methods of constructing and fastening structural wood panels over glazed openings.

METHOD 1

Wood structural panels with a minimum thickness of 7/16" and a maximum span of 8 feet (span is measured from the top of the opening to the bottom of the opening) is permitted for opening protection in one and two story buildings. The panels shall be precut and attached to the framing surrounding the opening. Panels shall be pre-drilled and attached per the following table with corrosion-resistant hardware. The following table provides fastening requirements for 140 mph wind speeds.

Fastener Type	Spacing for Max Panel Span of 8 ft
#8 or #10 wood screws with 2" embedment into framing of opening	6"

The fasteners shall be installed at all supported edges of the structural panel and shall be located a minimum of 1" from the edge of panel. All fasteners shall penetrate through the exterior wall covering with an embedment length of 2 inches minimum into the building frame.

METHOD 2

The Engineered Wood Association also has published recommendations for construction and fastening of wood structural panels for areas associated with wind speeds of 150 mph. This method utilizes 2x lumber as a stiffener to reduce the amount of deflection experienced by the structural wood panel and thus withstand the higher pressures associated with 150 mph winds. The use of this method is outlined below and figures (ref. APA) are provided to further demonstrate the appropriate construction and fastening. Dade and Broward counties in Florida have more stringent fastening and deflection requirements than provided in Method 1 above. The use of Method 2 as outlined below will also meet their requirements for a maximum 8' span.

Necessary Supplies and Materials

- 32/16, 15/32" 5-ply plywood or OSB
- ¾" shims
- 16d (.162 x 3 ½") nails
- 16d (.162 x 3 ½") double-headed nails
- 2x6's (SPF #2)
- 3/16" x 3" lag screws with fender washers
- Caulk

1. Pre-construct the wood panel and stiffener assembly utilizing 32/16, 15/32" 5-ply plywood or OSB and 2x6 SPF #2 stiffeners spaced 16" o.c. as shown on the attached Figure 3.
2. Utilize long brad, finishing, or casing nails to locate the framing along the window or door opening.
3. Secure shims to the framing with 16d nails (.162 x 3 ½") staggered at 3" o.c. along each shim.
4. Attach the pre-constructed panel to the window or door framing through the shims described in Step 3 above. The panel shall be secured with 16d (.162 x 3 ½") double-headed nails at 3" o.c. as depicted in Figure A1 (Securement of the storm shutter to the top and bottom of the wall opening is further demonstrated in Figures A2 and A3).

APPROVED BY NTA INC. 7/31/2018

Approval of this document does not authorize or approve any deviation or deviations from the requirements of applicable State Laws.

David Richter

Hurricane Shutter Design Considerations for Florida 4

FIGURE 3
SHUTTER STIFFENER ATTACHMENT – IF REQUIRED

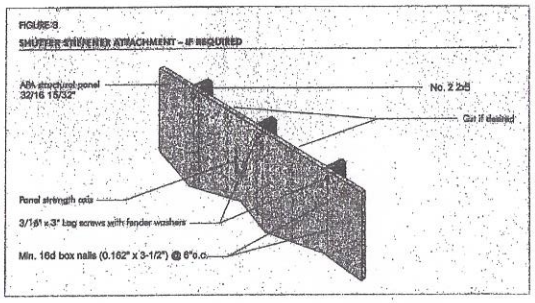

[RETURN TO INDEX]

APPROVED BY NTA INC. 09/11/2014

Approval of this document does not authorize or approve any deviation or deviations from the requirements of applicable State Laws.

P.E. SEAL | THIRD PARTY SEAL

TITLE: WINDBORNE DEBRIS PROTECTION			CMH MANUFACTURING, INC. Home Office 5300 Clayton Road, Maryville, TN 37804 PH: 865.380.3000 FAX: 865.380.3781
DRAWN BY: B.R.	DATE: 7/22/2011		
REVIEWED BY:	LAST REVISED: 2/26/2014		SHEET: SU-7.0
CHECKED BY:	CALC REF:		

1 Windborne Debris Protection
SCALE: N.T.S.

Jul 16, 2014 - 10:22am C:\Users\russellb\appdata\local\temp\AcPublish_2068\Modular Installation Instructions-Windborne Debris Protection.dwg

FIGURE A1

SHUTTER ATTACHMENT – VIEW FROM OUTSIDE

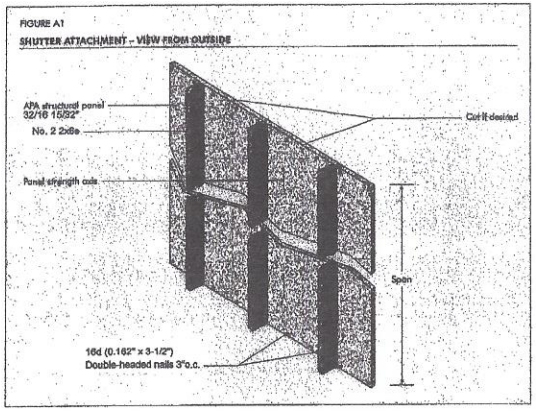

FIGURE A2

SHUTTER ATTACHMENT – TOP

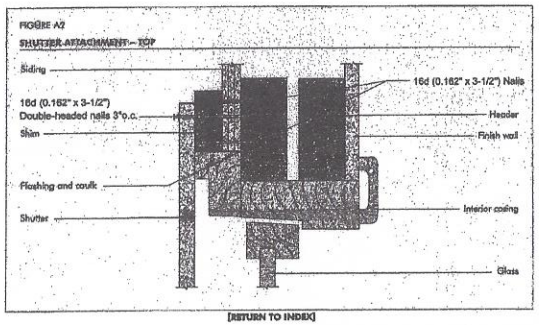

[RETURN TO INDEX]

FIGURE A3

SHUTTER ATTACHMENT – BOTTOM

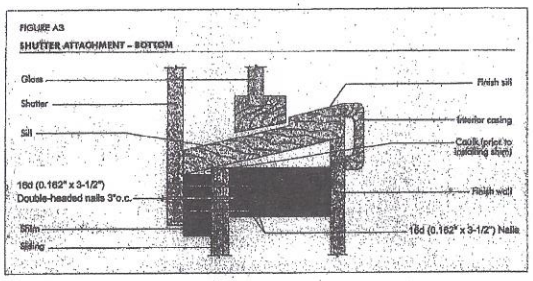

[RETURN TO INDEX]

APPROVED BY
NTA INC.
7/31/2018
Approval of this document does not authorize or approve any deviation or deviations from the requirements of applicable State Laws.
David Richter

1 Windborne Debris Protection
SCALE: N.T.S.

APPROVED BY
NTA INC.
09/11/2014
Approval of this document does not authorize or approve any deviation or deviations from the requirements of applicable State Laws.

P.E. SEAL | THIRD PARTY SEAL

TITLE: WINDBORNE DEBRIS PROTECTION			CMH MANUFACTURING, INC. Home Office 5000 Clayton Road, Maryville, TN 37804 PH: 865.380.3000 FAX: 865.380.3781
DRAWN BY: B.R.	DATE: 7/22/2011		
REVIEWED BY:	LAST REVISED: 2/26/2014		SHEET: SU-7.1
CHECKED BY:	CALC REF:		

Jul 16, 2014 - 10:22am C:\Users\russellb\appdata\local\temp\AcPublish_20568\Modular Installation Instructions-Windborne Debris Protection.dwg

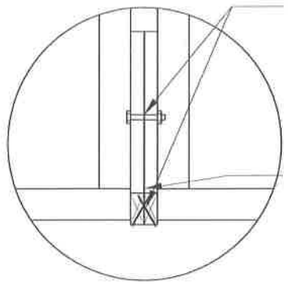

STANDARD ROOF CONNECTION
CONNECT MATE LINE ROOFS TOGETHER WITH ONE OF THE FOLLOWING OPTIONS.

- 3/8" LAG BOLT WITH 1" MIN. PENETRATION LAG SCREW SPACED 16" O.C. STAGGERED FROM SIDE TO SIDE.
- 1/2" DIA. BOLT WITH 1 3/8" WASHER SPACED 24" O.C. MAX. INSTALLED IN PRE-DRILLED HOLES.
- TOE-SCREW W/ #10 x 4 1/2" WOODSCREWS ALTERNATING EVERY 12" o.c.

NOTE
IF GAP EXISTS AT CONNECTION POINTS THEN A SHIM SHALL BE INSTALL TO MAINTAIN WOOD TO WOOD CONTACT.

1 Ceiling Connection

SCALE: 3/4"=1'-0" WIND: ALL ROOF PITCH: ALL

LIFTING OF ROOF
ONLY QUALIFIED SERVICE PERSONNEL SHOULD CARRY OUT THIS PROCEDURE. HOMEOWNERS OR UNAUTHORIZED PERSONNEL SHOULD NOT ATTEMPT TO ERECT THIS ROOF, AND DOING SO WILL VOID THE HOMEOWNERS WARRANTY.

NOTE: IT IS RECOMMENDED THAT THE HINGE ROOF BE RAISED BEFORE THE HALVES OF THE HOME ARE MATED TOGETHER. IT IS RECOMMENDED TO JACK EACH HALF OF THE ROOF WHEN THERE IS APPROXIMATELY 12" TO 20" BETWEEN THE HALVES.

TEMPORARILY SECURE A 48" - 2X6 BLOCK TO THE TRUSSES ABOVE AND BELOW EACH JACK FOR ADDITIONAL SUPPORT. ATTACH 2X TO BOTTOM SIDE OF TOP CORD ON TRUSS AND TOPSIDE OF BOTTOM CORD ON TRUSS. ALL ROOFS SHOULD BE RAISED WITH THE USE OF A CRANE OR BOOM TRUCK, WITH MULTIPLE PICK-UP POINTS ALONG EACH HALF. ATTACH STRAPS TO TRUSS TOP CORDS AT 2X6'S INSTALLED IN EARLIER STEPS. **DO NOT ATTACH STRAPS TO 2X'S AT ENDS OF TRUSSES.**

RAISE THE HINGED SECTION UP EVENLY UNTIL KINGPOSTS AND ATTACHED PLATE CAN BE SWUNG INTO PLACE ON TOP OF THE FIXED KINGPOSTS AND TEMPORARILY SET TO ALIGN ROOF.

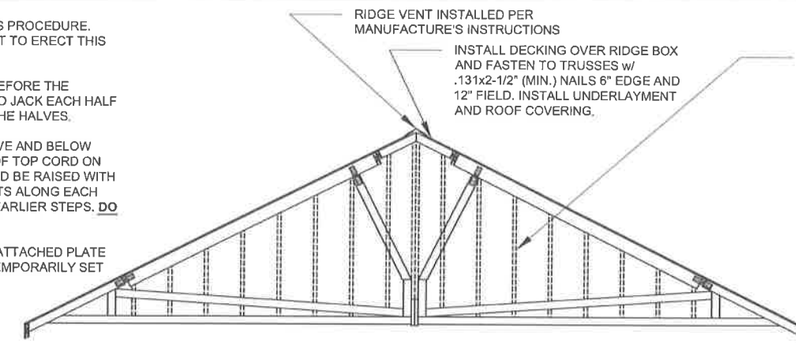

GABLE END WALL & TRUSS OVER SHEARWALL FRAMING
INSTALL GABLE END WALL FRAMING PER ONE OF THE FOLLOWING.

- INSTALLED 2x4 STUDS (56" MAX. HEIGHT) AT 16" O.C. FASTENED W/ (2) 8d TOE-NAILS EACH END FOR SIDING SECUREMENT. EACH END TRUSS MUST BE SHEATHED WITH 7/16" OSB FASTENED WITH 7/16" x 1-1/2" x 16 GA. STAPLES OR 6d NAILS 6" O.C.
- REMOVE ALL INTERIOR TRUSS COMPONENTS EXCEPT TOP AND BOTTOM CORD. INSTALL GABLE END WALL 2X4-16" O.C. SPACING. ATTACH WALL TOP & BOTTOM PLATES TO TRUSS W/ #8x3" SCREWS 8" O.C. EACH END TRUSS MUST BE SHEATHED WITH 7/16" OSB FASTENED TO TRUSS CHORDS AND 2x4s WITH 7/16" x 1-1/2" x 16 GA. STAPLES OR 6d NAILS 6" O.C.

-- Gable End Wall Framing

SCALE: N.T.S WIND: ALL ROOF PITCH: ALL

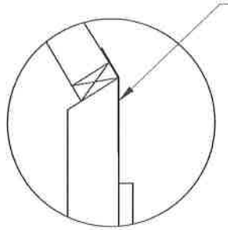

CONNECT SWING ARM TO KING POST WITH ONE OF THE FOLLOWING OPTIONS.

- MAXIMUM TRUSS REACTION AT CONNECTION: 1705# TENSION, 650# COMPRESSION, 282# SHEAR. (1) CS16 STRAP SECURED W/ (13) 8d x 1½" NAILS EACH END. LATERAL BOARDS SCREWED OR NAILED (OR EQUIVALENT) TOGETHER AT 16" O.C.

2a Alt. Swing Arm Connection

SCALE: 1"=1'-0" WIND: ALL ROOF PITCH: 5:12 to 9:12

SIDESTEP™ NT PLATE DETAIL

NT = NO TEETH

THE SIDESTEP™ NT PLATE IS DIRECTLY SUBSTITUTABLE WITH THE SIDESTEP PLATE.

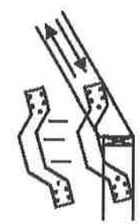

FASTEN THE SIDESTEP NT PLATE TO THE JOINING MEMBER WITH 8d COMMON WIRE NAILS, 1-1/2" LONG, d=0.131".

STANDARD SIDESTEP NT
5 FASTENERS EACH END (450# TENSION, 650# COMPRESSION, 282# SHEAR)

HEAVY DUTY SIDESTEP NT
5 FASTENERS EACH END (900# TENSION, 650# COMPRESSION, 282# SHEAR)

2b Alt. Swing Arm Connection

SCALE: N.T.S. WIND: ALL ROOF PITCH: 5:12 to 9:12

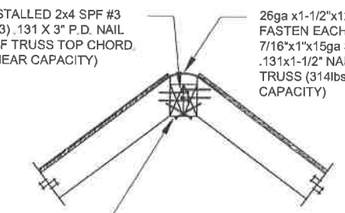

4 Peak Connection (Hinged Common Truss)

SCALE: N.T.S. WIND: ALL ROOF PITCH: ALL

ROOF INSTALLATION INFORMATION

THE TRUSS SHOWN ABOVE IS A REPRESENTATION OF THE TYPE OF ROOF SYSTEM FOR THE HOME. SEE ACTUAL TRUSS DRAWING FOR SPECIFIC TRUSS DIAGRAM. YOU WILL NEED TO SELECT WHICH CONNECTIONS APPLY TO THE ROOF SYSTEM YOU HAVE RECEIVED AND WHICH CONNECTIONS YOU WANT TO USE. NOT ALL CONNECTIONS APPLY TO THE ROOF SYSTEM. WE HAVE PROVIDED OPTIONS TO ENSURE PROPER INSTALLATION.

CUTS, NOTCHES AND HOLES BORED IN STRUCTURAL COMPOSITE LUMBER, STRUCTURAL GLUE-LAMINATED MEMBERS OR I-JOISTS ARE PROHIBITED EXCEPT WHERE PERMITTED BY THE MANUFACTURER'S RECOMMENDATIONS OR WHERE THE EFFECTS OF SUCH ALTERATIONS ARE SPECIFICALLY CONSIDERED IN THE DESIGN OF THE MEMBER BY A REGISTERED DESIGN PROFESSIONAL.

TRUSS MEMBERS SHALL NOT BE CUT, NOTCHED, DRILLED, SPLICED OR OTHERWISE ALTERED IN ANY WAY WITHOUT THE APPROVAL OF A REGISTERED DESIGN PROFESSIONAL. ALTERATIONS RESULTING IN THE ADDITION OF LOAD (E.G. HVAC EQUIPMENT, WATER HEATER) THAT EXCEEDS THAT DESIGN LOAD FOR THE TRUSS SHALL NOT BE PERMITTED WITHOUT VERIFICATION THAT THE TRUSS IS CAPABLE OF SUPPORTING SUCH ADDITIONAL LOADING.

ROOF DECKING SHALL BE COVERED WITH APPROVED ROOF COVERINGS SECURED TO THE BUILDING OR STRUCTURE. ROOF ASSEMBLIES SHALL BE DESIGNED AND INSTALLED IN ACCORDANCE WITH THE IRC AND THE APPROVED MANUFACTURER'S INSTALLATION INSTRUCTIONS SUCH THAT THE ROOF ASSEMBLY SHALL SERVE TO PROTECT THE BUILDING OR STRUCTURE.

FLASHING SHALL BE INSTALLED IN A MANNER THAT PREVENTS MOISTURE FROM ENTERING THE WALL AND ROOF THROUGH JOINTS IN COPINGS, THROUGH MOISTURE PERMEABLE MATERIALS AND AT INTERSECTIONS WITH PARAPET WALL AND OTHER PENETRATIONS THROUGH THE ROOF PLANE.

ASPHALT SHINGLES SHALL BE USED ONLY ON ROOF SLOPES OF TWO UNITS VERTICAL IN 12 UNITS HORIZONTAL (2:12) OR GREATER. FOR ROOF SLOPES FROM TWO UNITS VERTICAL IN 12 UNITS HORIZONTAL (2:12) UP TO FOUR UNITS VERTICAL IN 12 UNITS HORIZONTAL (4:12), DOUBLE UNDERLAYMENT APPLICATION IS REQUIRED.

UNLESS OTHERWISE NOTED, REQUIRED UNDERLAYMENT SHALL CONFORM TO ASTM D226 TYPE I, OR ASTM D 4869 TYPE I, OR ASTM D 6757. SELF-ADHERING POLYMER MODIFIED BITUMEN SHEET SHALL COMPLY WITH ASTM D 1970.

ASPHALT SHINGLES SHALL COMPLY WITH ASTM D 225 OR D 3462. ASPHALT SHINGLES SHALL BE TESTED IN ACCORDANCE WITH ASTM D7158H OR D 3161F. ASPHALT SHINGLE PACKAGING SHALL BEAR A LABEL TO INDICATE COMPLIANCE WITH ASTM D7158H OR D 3161F AND THE REQUIRED CLASSIFICATION.

FASTENERS FOR ASPHALT SHINGLES SHALL BE GALVANIZED STEEL, STAINLESS STEEL, ALUMINUM OR COPPER ROOFING NAILS, MINIMUM 12 GAUGE SHANK WITH A MINIMUM 3/8 INCH DIAMETER HEAD, ASTM F 1667, OF A LENGTH TO PENETRATE THROUGH THE ROOFING MATERIALS AND A MINIMUM OF ¾ INCH INTO THE ROOF SHEATHING. WHERE THE ROOF SHEATHING IS LESS THAN ¾ INCH THICK, THE FASTENERS SHALL PENETRATE THROUGH THE SHEATHING. FASTENERS SHALL COMPLY WITH ASTM F 1667.

ASPHALT SHINGLES SHALL HAVE THE MINIMUM NUMBER OF FASTENERS REQUIRED BY THE MANUFACTURER, BUT NOT LESS THAN FOUR FASTENERS PER STRIP SHINGLE OR TWO FASTENERS PER INDIVIDUAL SHINGLE.

FOR ROOFS LOCATED WHERE THE BASIC WIND SPEED IS 110 MPH OR HIGHER, SPECIAL METHODS OF FASTENING ARE REQUIRED. SPECIAL FASTENING METHODS SHALL BE TESTED IN ACCORDANCE WITH ASTM D 3161, CLASS F. ASPHALT SHINGLE WRAPPERS SHALL BEAR A LABEL INDICATING COMPLIANCE WITH ASTM D 3161, CLASS F FOR WIND SPEED EQUAL OR GREATER THAN REQUIRED FOR HOME LOCATION.

UNDERLAYMENT APPLIED IN AREAS SUBJECT TO HIGH WINDS, GREATER THAN 110 MPH, SHALL BE APPLIED WITH CORROSION-RESISTANT FASTENERS IN ACCORDANCE WITH MANUFACTURER'S INSTALLATION INSTRUCTIONS. FASTENERS ARE TO BE APPLIED ALONG THE OVERLAP NOT FARTHER APART THAN 36 INCHES ON CENTER.

VALLEY LININGS SHALL BE INSTALLED IN ACCORDANCE WITH MANUFACTURER'S INSTALLATION INSTRUCTIONS BEFORE APPLYING SHINGLES. VALLEY LININGS OF THE FOLLOWING TYPES SHALL BE PERMITTED:

FOR OPEN VALLEY (VALLEY LINING EXPOSED) LINED WITH METAL, THE VALLEY LINING SHALL BE AT LEAST 24 INCHES WIDE AND OF A CORROSION-RESISTANT METAL.

FOR OPEN VALLEYS, VALLEY LINING OF TWO PLIES OF MINERAL SURFACE ROLL ROOFING, COMPLYING WITH ASTM D-3909 OR ASTM D 6380 CLASS M, SHALL BE PERMITTED. THE BOTTOM LAYER SHALL BE 18 INCHES AND THE TOP LAYER A MINIMUM OF 36 INCHES WIDE.

FOR CLOSED VALLEYS (VALLEY COVERED WITH SHINGLES), VALLEY LINING OF ONE PLY OF SMOOTH ROLL ROOFING COMPLYING WITH ASTM D 6380 AND AT LEAST 36 INCHES WIDE OR VALLEY LINING FOR OPEN VALLEY CONDITIONS SHALL BE PERMITTED. SELF-ADHERING POLYMER MODIFIED BITUMEN UNDERLAY COMPLYING WITH ASTM D1970 SHALL BE PERMITTED IN LIEU OF THE LINING MATERIAL.

FLASHING AGAINST A VERTICAL SIDEWALL SHALL BE BY THE STEP-FLASHING METHOD. THE FLASHING SHALL BE A MINIMUM OF 4 INCHES HIGH AND 4 INCHES WIDE.

APPROVED BY
NTA INC. 7/31/2018
Approval of this document does not authorize or approve any deviation or deviations from the requirements of applicable State Laws.
David Richter

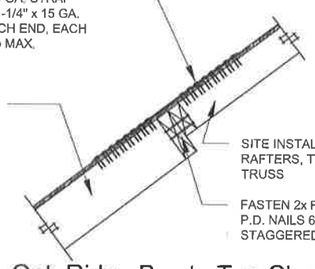

3 Opt. Ridge Box to Top Chord Conn.

SCALE: N.T.S. WIND: ALL ROOF PITCH: ALL

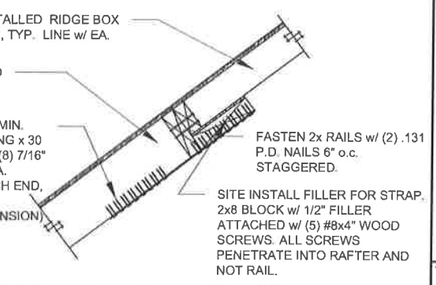

3a Opt. Ridge Box to Top Chord Conn.

SCALE: N.T.S. WIND: ALL ROOF PITCH: ALL

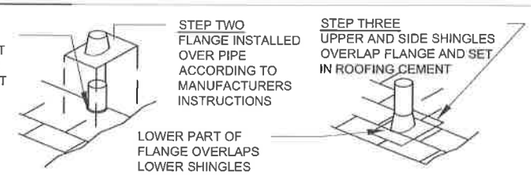

NOTES:

1. WHEN ROOF DECKING IS PENETRATED, THE AREA PENETRATED MAY BE 1/2" +/- 1/4" LARGER THEN ITEM PROTRUDING THRU OR PER THE MANUFACTURERS INSTALLATION INSTRUCTIONS.
2. ALL SHINGLES PENETRATIONS TO BE SEALED IN ACCORDANCE WITH THE FLASHING MANUFACTURER INSTALLATION INSTRUCTIONS WHEN APPLICABLE. OTHERWISE USE DETAIL ABOVE.
3. DO NOT USE PETROLEUM BASED SEALANTS ON BASE OF FLASHING WHEN USING A NO CAULK FLASHING.
4. PLUMBING VENT PENETRATION SHALL EXTEND A MINIMUM OF 6" OR AS AMENDED BY STATE OR LOCAL CODES ABOVE ROOF FINISH .
5. DETAILS APPLICABLE TO PLUMBING VENTS, FLUES AND CHIMNEYS, AND ELECTRICAL MASTS.

APPROVED BY
NTA INC. 06/17/2016
Approval of this document does not authorize or approve any deviation or deviations from the requirements of applicable State Laws.

P.E. SEAL

THIRD PARTY SEAL

TITLE: Hinged Roof Non-Attic Storage Installation Information			CMH MANUFACTURING, INC. Home Office 5000 Clayton Road, Maryville, TN 37804 PH: 865.380.3000 FAX: 865.380.3781
DRAWN BY: B.R.	DATE: 8/12/2014		
REVIEWED BY: --	LAST REVISED: 5/17/2016		SHEET: SU976-2.1.0
CHECKED BY: --	CALC REF: --		

NOTES:

1. INSTALLATION OF ON-SITE DECKING: MIN. 17" WIDE RATED OSB DECKING FASTENED PER ROOF DIAPHRAGM AND SUCTION LOAD REQUIREMENTS.
2. WHEN SHINGLES ARE APPLIED W/ A 5" EXPOSURE, THE FASTENER LOCATIONS SHOULD BE ON A LINE 5-5/8" ABOVE THE BUTT EDGE AND 1" FROM EACH END. REFER TO MANUFACTURER'S INSTRUCTIONS.
3. MAX. 1-1/2" TOTAL SHIM ALLOWED AT EACH RIDGE BOX. SHIM MUST BE DIMENSIONAL LUMBER, PLYWOOD OR OSB. FASTENER LENGTH MUST BE INCREASED IF NECESSARY SO THAT 1-1/2" OF PENETRATION IN MAIN MEMBER IS MAINTAINED.
4. APPLICABLE FOR TRUSS PEAK APPLICATIONS WITH REACTIONS AT RAILS THAT DO NOT EXCEED 525# TENSION AND 183# SHEAR.

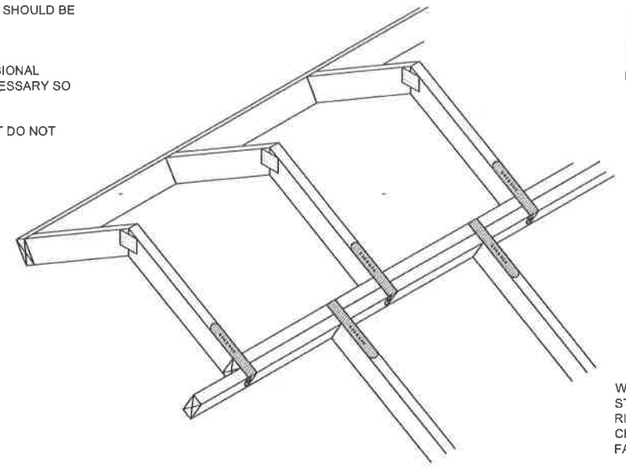

WHEN RIDGEBLOCK AND TOP CHORD DO NOT ALIGN, A STRAP MUST BE INSTALLED FROM TOP OF EACH RIDGEBLOCK TO OPPOSITE 2x AND FROM EACH TOP CHORD TO OPPOSITE 2x WITH QUANTITY OF FASTENERS LISTED IN CHART PER DETAIL 1.

WHEN RIDGEBLOCK AND TOP CHORD DO NOT ALIGN, A STRAP MUST BE INSTALLED FROM TOP OF EACH RIDGEBLOCK TO OPPOSITE 2x AND FROM EACH TOP CHORD TO OPPOSITE 2x WITH QUANTITY OF FASTENERS LISTED IN CHART.

	FASTENERS REQUIRED PER STRAP		
	15GA STAPLE	.131 x 2-1/2" NAILS	.099" x 1-1/2" ROOFING NAIL
26GA STRAP	11	5	9

1 Alternate Peak Connection

SCALE: N.T.S WIND: ALL ROOF PITCH: ALL

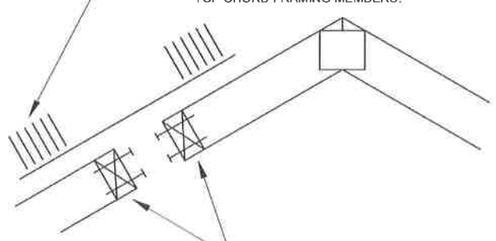

2a Option 1 Fastening

SCALE: 1/2"=1' WIND: ALL ROOF PITCH: ALL

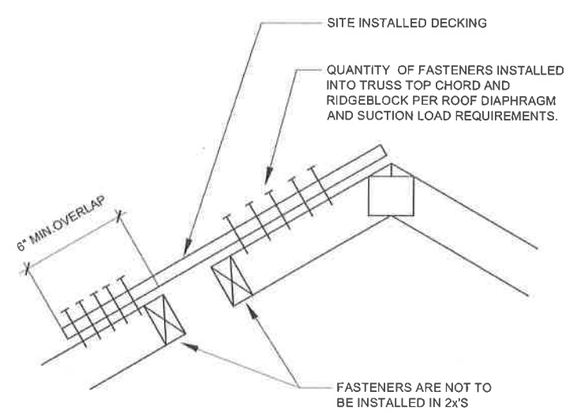

2b Option 2 Fastening

SCALE: 1/2"=1' WIND: ALL ROOF PITCH: ALL

APPROVED BY
NTA INC.
7/31/2018
Approval of this document does not authorize or approve any deviation or deviations from the requirements of applicable State Laws.
David Richter

APPROVED BY
NTA INC.
12/19/2014
Approval of this document does not authorize or approve any deviation or deviations from the requirements of applicable State Laws

P.E. SEAL

THIRD PARTY SEAL

TITLE: Hinged Roof Non-Attic Storage Installation Information			CMH MANUFACTURING, INC. Home Office 5000 Clayton Road, Maryville, TN 37804 PH: 865.380.3000 FAX: 865.380.3781
DRAWN BY: B.R.	DATE: 8/12/2014		
REVIEWED BY: --	LAST REVISED: 8/13/2014		SHEET: SU976-2.1.1
CHECKED BY: --	CALC REF: --		

Aug 13, 2014 - 11:20am W:\ENG\Modular Packages\1One Modular Package\Setup Manuals\Modular Installation Instructions-Roof-976.dwg

NORTH CAROLINA
MODULAR PLANS REVIEW CHECKLIST

		PAGE 1 of 3	Rev: August 2014
Manufacturer		CAVALIER HOME BUILDERS - NASHVILLE DIV.	
Model number/name		**MODEL 7609A6401 (51373)**	
3rd Party		NTA, Inc.	
Review Date			
Reviewer			
		Plan Sheet Page # and NOTES	
	QC MANUAL (current and complete)		
	APPENDIX B (required and attached)	SINGLE-FAMILY DWELLING	
	PLAN SHEETS		
	Each plan sheet third-party stamped with approver's name		
	Each plan sheet is numbered and/or indexed	YES	
	GENERAL (cover sheet)		
	Code References	Pg. 2 - GENERAL NOTES	
	Statement regarding connection to public utilities	Pg. 2 - GENERAL NOTES (NOTE #1)	
	Statement regarding bathrooms if not included	NA	
	Construction type	Pg. 2 - GENERAL NOTES (NOTE #2)	
	Occupancy classification	Pg. 2 - GENERAL NOTES (NOTE #10)	
	Fire resistance ratings (if required)		
	Floor live load	Pg. 2 - GENERAL NOTES (NOTE #3)	
	Roof live load	Pg. 2 - GENERAL NOTES (NOTE #4)	
	Design wind velocity	Pg. 2 - GENERAL NOTES (NOTE #5)	
	Seismic information (commercial projects)	NA	
	Thermal zones	SEE ATTACHED - ResCHECK	
	Notice to inspections department regarding items to be site installed	Pg. 2 - GENERAL NOTES	
	FLOOR PLANS		
	Interior and exterior wall layouts	Pg. 3 - MODEL PLAN	
	Door and window schedule	Pg. 3 - MODEL PLAN	
	Light and Ventilation requriements	Pg. 3 - MODEL PLAN	
	Attic access (size and locaiton)	Pg. 3 - MODEL PLAN	
	Non-prescriptive headers	Pg. 3 - MODEL PLAN	
	Safety glazing requirements	Pg. 3 - MODEL PLAN	
	Fire rating of Exterior walls (if applicable)	NA	
	EXTERIOR ELEVATIONS		
	Exterior materials	Pg. 5 - CROSS SECTION / Pg. 9 - EXT. ELEV.	
	Attic ventilation requirements	Pg. 9 - EXTERIOR ELEVATIONS	
	PLUMBING		
	Plan	Pg. 7 - DWV SYSTEM / Pg. 8 - WATER SUPPLY	
	All fixtures furnished by mfg. shown on plans	Pg. 3 - MODEL PLAN	
	Materials (water supply & distribution, DWV, storm drainage)	Pg. 7 - DWV SYSTEM / Pg. 8 - WATER SUPPLY	
	Supply and waste risers, including DWV system (generic) beneath the building	Pg. 7 - DWV SYSTEM / Pg. 8 - WATER SUPPLY	
	Water heater (type and capacity)	Pg. 8 - WATER SUPPLY	

MODULAR PLANS REVIEW CHECKLIST

		PAGE 2 of 3	revised May 2011
		Plan Sheet Page # and NOTES	
	MECHANICAL		
	Design calculations	SEE ATTACHED- DUCT CALCS	
	Installed unit capacity	SEE ATTACHED - DUCT CALCS	
	Supply and returns (locations and sizes)	SEE ATTACHED - DUCT CALCS	
	Duct sizes	SEE ATTACHED - DUCT CALCS	
	Specifications (units, ducts)	SEE ATTACHED - DUCT CALCS	
	All appliances furnished by mfg. shown on plans	Pg. 2 -GENERAL NOTES / Pg. 6 - ELECTRICAL	
	ELECTRICAL		
	Plan	Pg. 6 - ELECTRICAL	
	Location of all electrical boxes	Pg. 6 - ELECTRICAL	
	Electrical panel location	Pg. 6 - ELECTRICAL	
	Note regarding main disconnect (if applicable)	Pg. 6 - ELECTRICAL	
	Exterior lighting and receptacles	Pg. 6 - ELECTRICAL	
	Ground level receptacles (if applicable)	Pg. 6 - ELECTRICAL	
	Smoke detector location(s)	Pg. 6 - ELECTRICAL	
	Electrical load calculations	SEE ATTACHED - ELECTRICAL LOAD CALCS.	
	Electrical panel layout (breaker and wire sizes, circuit schedule)	Pg. 6 - ELECTRICAL	
	Panel and service entrance sizes	SET-UP MANUAL	
	All fixtures furnished by mfg. shown on plans	C	
	ACCESSIBILITY		
	(for other than 1 & 2 family dwellings)		
	Entrances and means of egress		
	Doors, doorways, and door hardware		
	Stairs and handrails		
	Toilet rooms, plumbing fixtures, grab bars, etc		
	Bathrooms and shower rooms		
	Occupancy specific requirements		
	Multi-family dwellings: Type A and B units		
	FLOOR X-SECTION		
	Joist and beam sizes and spacing	Pg. 5 - CROSS-SECTION	
	Materials species and grade	Pg. 5 - CROSS-SECTION	
	Sheathing, decking, and concrete as applicable	Pg. 5 - CROSS-SECTION	
	Fastening instructions	Pg. 5 - CROSS-SECTION	
	Insulation	Pg. 5 - CROSS-SECTION	
	Details as required for clarification	NA	
	WALL X-SECTION		
	Stud and column sizes and spacing	Pg. 5 - CROSS-SECTION	
	Materials species and grade	Pg. 5 - CROSS-SECTION	
	Sheathing and bracing	Pg. 5 - CROSS-SECTION	
	Headers and lintels	Pg. 5 - CROSS-SECTION	
	Finishes	Pg. 5 - CROSS-SECTION	
	Fastening instructions	Pg. 5 - CROSS-SECTION	
	Insulation	Pg. 5 - CROSS-SECTION	
	Details as required for clarificaiton	NA	

		PAGE 3 of 3	revised May 2011
		Plan Sheet Page # and NOTES	
	CEILING/ROOF X-SECTION		
	Truss, rafter, and beam spacing	Pg. 5 - CROSS-SECTION	
	Lumber species and grade	Pg. 5 - CROSS-SECTION (MANUAL REF.)	
	Sheathing and decking	Pg. 5 - CROSS-SECTION	
	Finishes	Pg. 5 - CROSS-SECTION	
	Fastening instructions	Pg. 5 - CROSS-SECTION	
	Insulation	Pg. 2 - GEN. NOTES / Pg. 5 - CROSS-SECTION	
	Details including NC sealed truss designs or manual reference	Pg. 5 - CROSS-SECTION (MANUAL REF.)	
	Truss Design	SEE ATTACHED-TRUSS DETAILS	
	FOUNDATION PLAN		
	Footings, pier, and curtain wall locations and specifications	Pg. 4-OFF-FRAME FOUND. & ATTACHED PACK	
	X-sections with dimensions	Pg. 4-OFF-FRAME FOUND. & ATTACHED PACK	
	Anchorage - sill plate to piers and curtain wall	Pg. 4-OFF-FRAME FOUND. & ATTACHED PACK	
	Anchorage - building to sill plate	Pg. 4-OFF-FRAME FOUND. & ATTACHED PACK	
	Anchorage - tie downs (lateral and longitudinal)	Pg. 4-OFF-FRAME FOUND. & ATTACHED PACK	
	Soil bearing capacity	Pg. 4-OFF-FRAME FOUND. & ATTACHED PACK	
	Minimum concrete compressive strength	Pg. 4-OFF-FRAME FOUND. & ATTACHED PACK	
	Motar type	Pg. 4-OFF-FRAME FOUND. & ATTACHED PACK	
	Ventilation requirements (with and without vapor barrier)	Pg. 4-OFF-FRAME FOUND. & ATTACHED PACK	
	Crawl space access requirements	Pg. 4-OFF-FRAME FOUND. & ATTACHED PACK	
	ENERGY COMPLIANCE		
	Demonstrate compliance	SEE ATTACHED ResCHECK CALCS	
	SET-UP INSTRUCTIONS		
	Floor and ceiling connections	Pg. 5 - CROSS-SECTION (MANUAL REF.)	
	Marriage wall connections	Pg. 5 - CROSS-SECTION (MANUAL REF.)	
	Roof set-up connections	Pg. 5 - CROSS-SECTION (MANUAL REF.)	
	Plumbing connections	Pg. 2 - GENERAL NOTES / Pg. 7 - DWV SYSTEM	
	Mechanical connections	Pg. 2 - GENERAL NOTES	
	Electrical connections	Pg. 2 - GEN. NOTES / Pg.6-ELEC.	
	Fire stopping	Pg. 2 - GEN NOTES	
	Air infiltration elimination	Pg. 5 - CROSS-SECTION (MANUAL REF.)	
	Notice to inspections department attachment if set-up instructions are by attachment	Pg. 2 - GENERAL NOTES	
	ITEMS NOT INSPECTED IN PLANT		
	List of items not inspected by 3rd. Party	Pg. 2 - GENERAL NOTES	
	Notice to inspections department	Pg. 2 - GENERAL NOTES	