LIFE SAFETY PLAN REQUIREMENTS:

- ☒ FIRE AND/OR SMOKE RATED WALL LOCATIONS (CHAPTER 7) – SEE NOTE 1
- ☒ ASSUMED AND REAL PROPERTY LINE LOCATIONS – SEE NOTE 2
- ☒ EXTERIOR WALL OPENING AREA WITH RESPECT TO DISTANCE TO ASSUMED PROPERTY LINES (705.8) – SEE NOTE 3
- ☒ OCCUPANCY TYPES FOR EACH AREA AS IT RELATES TO OCCUPANT LOAD CALCULATION (TABLE 1004.5)
- ☒ OCCUPANT LOADS FOR EACH AREA
- ☒ EXIT ACCESS TRAVEL DISTANCES (1017)
- ☒ COMMON PATH OF TRAVEL DISTANCES (1006.2.1 & 1006.3.3)
- ☒ DEAD END LENGTHS (1020.5) – SEE NOTE 4
- ☒ CLEAR EXIT WIDTHS FOR EACH EXIT DOOR
- ☒ MAXIMUM CALCULATED OCCUPANT LOAD CAPACITY EACH EXIT DOOR CAN ACCOMMODATE BASED ON EGRESS WIDTH (1005.3)
- ☒ ACTUAL OCCUPANT LOAD FOR EACH EXIT DOOR
- ☒ A SEPARATE SCHEMATIC PLAN INDICATING WHERE FIRE RATED FLOOR/CEILING AND/OR ROOF STRUCTURE IS PROVIDED FOR PURPOSES OF OCCUPANCY SEPARATION. SEE NOTE 5
- ☒ LOCATION OF DOORS WITH PANIC HARDWARE (1010.2.9) – SEE NOTE 6
- ☒ LOCATION OF DOORS WITH DELAYED EGRESS LOCKS AND AND THE AMOUNT OF DELAY (1010.2.11) – SEE NOTE 7
- ☒ LOCATION OF DOORS WITH ELECTROMAGNETIC EGRESS LOCKS (1008.1.9.8) – SEE NOTE 7
- ☒ LOCATION OF DOORS EQUIPPED WITH HOLD-OPEN DEVICES – SEE NOTE 7
- ☒ LOCATION OF EMERGENCY ESCAPE WINDOWS (1031) – SEE NOTE 7
- ☒ THE SQUARE FOOTAGE OF EACH FIRE AREA (202) – SEE NOTE 8
- ☒ THE SQUARE FOOTAGE OF EACH SMOKE COMPARTMENT (407.5) – SEE NOTE 9
- ☐ NOTE ANY CODE EXCEPTIONS OR TABLE NOTES THAT MAY HAVE BEEN UTILIZED REGARDING THE ITEMS ABOVE

LIFE SAFETY PLAN NOTES:

1. SEE LEGEND FOR RATED WALLS.
2. ALL ASSUMED AND REAL PROPERTY LINES $\geq$20'
3. ASSUMED PROPERTY LINES = 15'; UNLIMITED; 705.8.1 EXC. 2
4. NO DEAD ENDS OVER 10'; 20' ALLOWED
5. NO RATING REQUIRED FOR THIS STRUCTURE.
6. PANIC HARDWARE NOT REQUIRED.
7. NO DELAYED EGRESS LOCKS, ELECTROMAGNETIC LOCKS, HOLD OPEN DEVICES, OR EMERGENCY ESCAPE WINDOWS
8. FIRE AREAS DO NOT EXCEED CODE ALLOWANCE
9. BUILDING MEETS CODE REQUIREMENTS WITHOUT SUBDIVISION INTO SMOKE COMPARTMENTS; NO SMOKE COMPARTMENTS

EXIT REQUIREMENTS: NUMBER AND ARRANGEMENTS OF EXITS

FLOOR, ROOM OR SPACE DESIGNATION	MINIMUM[2] NO. OF EXITS		TRAVEL DISTANCE		ARRANGEMENT MEANS OF EGRESS [1,3] (SECTION 1016–1021)	
	REQ'D.	SHOWN ON PLANS	ALLOWABLE TRAVEL DISTANCE (TABLE 1017.2)	ACTUAL TRAVEL DISTANCE SHOWN ON PLANS	REQUIRED DISTANCE BETWEEN EXIT DOORS	ACTUAL DISTANCE SHOWN ON PLANS
S–1	2	6	200'	141'–3"	117'–0"	146'–0"

1. CORRIDOR DEAD ENDS (SECTION 1020.4)
2. BUILDINGS W/SINGLE EXITS (TABLE 1006.3.2(2)), SPACES W/ONE EXIT OR EXIT ACCESS DOORWAY (TABLE 1006.2.1)
3. COMMON PATH OF TRAVEL (SECTION 1029.8)

EXIT WIDTH

USE GROUP OR SPACE DESCRIPTION	(a)	(b)		(c)		EXIT WIDTH (In)			
	AREA[1] SQ. FT.	AREA[1] PER OCCUPANT (TABLE 1004.5)	CALCULATED OCCUPANT LOAD (a/b)	EGRESS WIDTH PER OCCUPANT (TABLE 1005.3.2)		REQUIRED WIDTH (SECTION 1005.1) (a/b) x c		ACTUAL WIDTH SHOWN ON PLANS	
				STAIR	LEVEL	STAIR	LEVEL	STAIR	LEVEL
S–1	24,000	500 GROSS	48	N/A	.2	N/A	9.6"	N/A	282"
TOTAL	24,000								

1. SEE TABLE 1004.5 TO DETERMINE WHETHER NET OR GROSS AREA IS APPLICABLE SEE DEFINITION "AREA, GROSS" AND "AREA, NET" (SECTION 202)
2. MINIMUM STAIRWAY WIDTH (SECTION 1011.2); MIN. CORRIDOR WIDTH (SECTION 1020.2); MIN. DOOR WIDTH (SECTION 1010.1.1)
3. MINIMUM WIDTH OF EXIT PASSAGEWAY (SECTION 1024.2)
4. SEE SECTION 1005.6 FOR CONVERGING EXITS.
5. THE LOSS OF ONE MEANS OF EGRESS SHALL NOT REDUCE THE AVAILABLE CAPACITY TO LESS THAN 50% OF THE TOTAL REQUIRED (SECTION 1005.5)
6. ASSEMBLY OCCUPANCIES (SECTION 1029)

MAXIMUM CALCULATED OCCUPANT LOAD CAPACITY EACH EXIT DOOR CAN ACCOMMODATE BASED ON EGRESS WIDTH (1005.1)

1. 47" CLEAR WIDTH DIVIDED BY .2" = 235 OCCUPANTS CALCULATED OCCUPANCY PER EXIT = 8 PEOPLE CALCULATED OCCUPANCY DOES NOT EXCEED MAXIMUM CAPACITY OF EXIT.
2. 47" CLEAR WIDTH DIVIDED BY .2" = 235 OCCUPANTS CALCULATED OCCUPANCY PER EXIT = 8 PEOPLE CALCULATED OCCUPANCY DOES NOT EXCEED MAXIMUM CAPACITY OF EXIT.
3. 47" CLEAR WIDTH DIVIDED BY .2" = 235 OCCUPANTS CALCULATED OCCUPANCY PER EXIT = 8 PERSON CALCULATED OCCUPANCY DOES NOT EXCEED MAXIMUM CAPACITY OF EXIT.
4. 47" CLEAR WIDTH DIVIDED BY .2" = 235 OCCUPANTS CALCULATED OCCUPANCY PER EXIT = 8 PEOPLE CALCULATED OCCUPANCY DOES NOT EXCEED MAXIMUM CAPACITY OF EXIT.
5. 47" CLEAR WIDTH DIVIDED BY .2" = 235 OCCUPANTS CALCULATED OCCUPANCY PER EXIT = 8 PEOPLE CALCULATED OCCUPANCY DOES NOT EXCEED MAXIMUM CAPACITY OF EXIT.
6. 47" CLEAR WIDTH DIVIDED BY .2" = 235 OCCUPANTS CALCULATED OCCUPANCY PER EXIT = 8 PEOPLE CALCULATED OCCUPANCY DOES NOT EXCEED MAXIMUM CAPACITY OF EXIT.

VERIFY DUCTWORK DOES NOT BLOCK EXIT SIGN VISIBILITY.

NOTICE TO CONTRACTOR
All construction must comply with current NC Building Codes and is subject to field inspection and verification.
Reviewed for Code Compliance
03/16/2026
Harnett COUNTY NORTH CAROLINA

Reviewed for Fire Code Compliance
Harnett COUNTY NORTH CAROLINA
Leslie Jackson
03/16/2026 3:22:59 PM

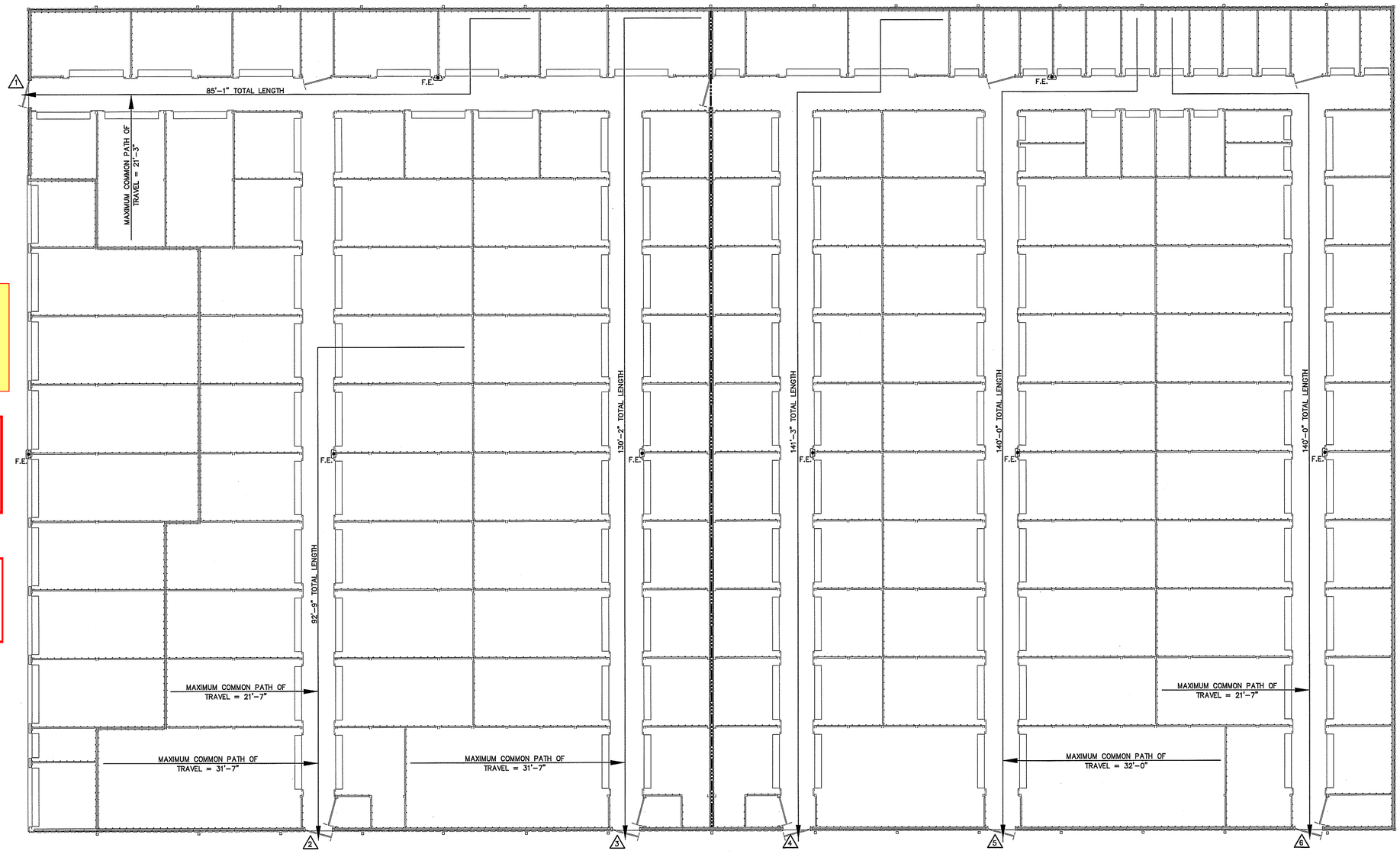

LEGEND
3 HOUR RATED WALL U419

NOTE:
AREA/ROOM/SPACE DESIGNATIONS USED ON LIFE SAFETY PLANS ARE EXCLUSIVE TO LIFE SAFETY PLAN ONLY, AND ARE NOT INDICATIVE OF ANY ACTUAL SPACE DESIGNATIONS USED ELSEWHERE.

LEGEND
F.E. FIRE EXTINGUISHER CLASS ABC 10 POUNDS

LIFE SAFETY PLAN BUILDING "H"

SCALE: 1/8" = 1'–0"

NORTH CAROLINA PROFESSIONAL SEAL 18909 ENGINEER BARRY L. CRUSE
02–13–26

PLANS FOR:
AMPLE STORAGE BUILDING "H"
ERWIN, NORTH CAROLINA 28339

REVISIONS
NO.

Cruse And Associates, P.A.
414 EAST EDGERTON STREET
Dunn, North Carolina 28334
PH: (910) 892-4168
FAX: (910) 892-5162
LICENSE NO.: C-1721

THESE DOCUMENTS ARE INSTRUMENTS OF SERVICE AND AS SUCH THESE DRAWINGS, DESIGNS, AND DESIGN CONCEPTS PRESENTED REMAIN THE PROPERTY OF THE ENGINEER. PUBLISH OR DUPLICATE THE DRAWINGS OR DESIGNS ONLY WITH THE WRITTEN PERMISSION OF THE ENGINEER.
© COPY RIGHT

DATE 02/13/26
DRAWN BY BAM
JOB NO. 26–02

SHEET NO.
LS-1 OF 1

AMPLE STORAGE

ERWIN, NORTH CAROLINA

WIND LOAD DESIGN DATA:

ULTIMATE DESIGN WIND SPEED (V_{ULT}): 119 MPH
NOMINAL DESIGN WIND SPEED (V_{ASD}): 93 MPH
RISK CATEGORY: I
WIND EXPOSURE: B
INTERNAL PRESSURE COEFFICIENT: ± 0.18

SNOW LOAD DESIGN DATA:

GROUND SNOW LOAD (Pg): 10.0 PSF

EARTHQUAKE LOAD DESIGN DATA:

- RISK CATEGORY: I
- SEISMIC IMPORTANCE FACTOR (I): 1.0
- SEISMIC DESIGN CATEGORY: B
- ANALYSIS PROCEDURE: EQUIVALENT LATERAL FORCE PROCEDURE (ASCE 7-16 SECTION 12.8)
- BASIC SEISMIC-FORCE-RESISTING SYSTEM: LIGHT FRAMED WALLS WITH STEEL SHEAR PANELS
- SITE CLASS: D
- DESIGN BASE SHEAR: BUILDING "H": 2.400^K
- RESPONSE MODIFICATION FACTOR (R): 7.0
- SEISMIC RESPONSE COEFFICIENT (C_S): 0.020
- MAPPED SPECTRAL RESPONSE ACCELERATION
  (S_S): 13.3% G
  (S_1): 6.5% G
- SPECTRAL RESPONSE COEFFICIENTS
  (S_{DS}): 14.2% G
  (S_{D1}): 10.4% G

BUILDING DATA :

BUILDING DESCRIPTION :

SINGLE STORY METAL BUILDING BOLTED TO CONCRETE SLAB FOUNDATION.

BUILDING SIZE :

BUILDING "H" 120' x 200' = 24,000 sq. ft. 10'-0" EAVE HEIGHT

PARKING DATA :

SEE SITE PLAN BY OTHERS

BUILDING CODE :

THE 2024 NORTH CAROLINA BUILDING CODE

DESIGN CRITERIA :

THIS BUILDING HAS BEEN DESIGNED TO CONFORM TO THE STRUCTURAL REQUIREMENTS OF THE 2024 NORTH CAROLINA BUILDING CODE WITH CURRENT REVISIONS.

THIS BUILDING HAS BEEN DESIGNED FOR THE FOLLOWING LIVE LOADINGS IN ADDITION TO THE DEAD LOADINGS :

ROOF LIVE LOADING:	20 psf
FLOOR LIVE LOADING:	125 psf
USE GROUP:	S-1
TYPE OF CONSTRUCTION:	II-B

IT IS THE RESPONSIBILITY OF THE BUYER/OWNER TO VERIFY THE FIREWALL, LIVE LOAD AND WIND LOAD REQUIREMENTS WITH THE LOCAL CODE AUTHORITY.

PROJECT NUMBER :

NC25223

SUBMITTED TO :

LAMPE MANAGMENT COMPANY, L.L.C.
ATTN: GUY LAMPE
225 PEEDIN ROAD
SMITHFIELD, NC 27577

PHONE: (919) 934-3041

NOTE: DETAIL LABELS CONTAINED WITHIN THIS SET OF PLANS MAY REFERENCE THE ERECTION DRAWINGS MARKED IN THIS SCHEDULE. EXAMPLE: DETAIL A/900 REFERS TO DETAIL "A" LOCATED ON ERC900X.

ERECTION DRAWINGS

ERC010X		ERC200X	X	ERC420X	X	ERC619X		ERC750X	
ERC016X	X	ERC201X		ERC500X		ERC620X		ERC751X	
ERC100X	X	ERC202X	X	ERC505X	X	ERC621X		ERC752X	
ERC105X	X	ERC203X	X	ERC506X	X	ERC622X		ERC753X	
ERC106X		ERC204X		ERC515X		ERC623X		ERC754X	
ERC110X	X	ERC206X		ERC600X	X	ERC624X		ERC800X	
ERC112X	X	ERC207X	X	ERC601X	X	ERC625X		ERC900X	
ERC115X	X	ERC208X	X	ERC602X	X	ERC626X		ERC901X	
ERC120X		ERC209X		ERC603X		ERC630X	X	ERC902X	
ERC125X		ERC250X	X	ERC604X		ERC631X	X	ERC903X	
ERC130X	X	ERC250XFHP		ERC605X		ERC650X		ERC904X	
ERC151X		ERC251X		ERC606X		ERC651X		ERC905X	
ERC152X		ERC251XFHP		ERC607X		ERC652X		ERC907X	
ERC153X		ERC252X	X	ERC608X		ERC700X	X	ERC908X	
ERC154X		ERC252XFHP		ERC609X		ERC710X		ERC910X	
ERC155X		ERC253XALT		ERC610X		ERC711X		ERC911X	
ERC175X		ERC254X	X	ERC611X		ERC712X		ERC912X	
ERC176X		ERC255X		ERC612X		ERC713X		ERC913X	
ERC177X		ERC256X		ERC613X		ERC720X		ERC914X	
ERC178X		ERC257X		ERC614X		ERC725X		ERC915X	
ERC179X		ERC258X		ERC615X	X	ERC730X		ERC916X	
ERC180X		ERC302X		ERC616X		ERC731X		ERC917X	
ERC181X		ERC302X(INS)		ERC617X		ERC731XFHP		ERC918X	
ERC182X		ERC303X		ERC618X		ERC732X		ERC919X	
ERC183X		ERC410XFL	X	ERC618XALT		ERC732XFHP			

SCHEDULE OF DRAWINGS

DRAWING NO.	DESCRIPTION
CS1	COVER SHEET
CS2	BUILDING NOTES
CS3	APPENDIX B
F1	WEDGE ANCHOR PLAN & NOTES
F2	WEDGE ANCHOR DETAILS
S1	ELEVATIONS & NOTES
S2	FLOOR PLAN & NOTES
S3	CROSS SECTION & DETAILS
S4	BUILDING DETAILS

NORTH CAROLINA PROFESSIONAL SEAL 029129 ENGINEER STEVEN W. SCHAUB

FEB 26 2026

S.E. CONSULTANTS, Inc.
Structural Engineering Consultants
5800 East Thomas Road, Suite 104
Scottsdale, AZ 85251
(480)946-2010
Job No.: 0361-26
Firm License NC: C-2593

BETCO, Inc.
228 Commerce Blvd.
Statesville, NC 28625
Limited Engineering License # D-0140

© 2024 BETCO, INC. ALL RIGHTS RESERVED. NO PART OF THESE DRAWINGS MAY BE REPRODUCED, DISTRIBUTED, OR TRANSMITTED IN ANY FORM OR BY ANY MEANS, INCLUDING PHOTOCOPYING, RECORDING, OR OTHER ELECTRONIC OR MECHANICAL MEANS, WITHOUT THE PRIOR WRITTEN PERMISSION OF THE COPYRIGHT OWNER. THESE DRAWINGS ARE INTENDED SOLELY FOR THE PROJECT SPECIFIED AND MAY NOT BE USED FOR OTHER PROJECTS OR PURPOSES WITHOUT EXPLICIT AUTHORIZATION FROM THE COPYRIGHT OWNER.

RELEASE FOR CONSTRUCTION DATE 2/23/2026

GENERAL NOTES:

1. CONCRETE FOUNDATIONS AND FLOOR SLAB ARE TO BE SUPPLIED AND INSTALLED BY OTHERS . WEDGE ANCHORS FOR INTERIOR AND EXTERIOR FOOTINGS SUPPLIED AND INSTALLED BY BETCO.
2. EXTERIOR OPENINGS, NOT DESIGNATED AS DOOR LOCATIONS, TO BE COMPLETED USING EXTERIOR WALL PANELS FURNISHED BY BETCO.
3. USE DOW 791 SILICONE CAULK AND 1/2" WIDE BUTYL RUBBER TAPE SEALANT FOR ROOF INSTALLATION. USE DOW 799 SILICONE CAULK AT DOWNSPOUT TO GUTTER JOINT.
4. INTERIOR PARTITIONS PERPENDICULAR TO ROOF BEAM(S) MUST BE COMPLETED BEFORE ROOF PANELS ARE INSTALLED. USE PARTITION FRAMING TO PLUMB AND SQUARE COLUMNS AND HEADER SECTIONS. CHECK BUILDING WIDTH AT TOP OF COLUMNS PRIOR TO ROOF INSTALLATION.
5. THOROUGHLY SWEEP ROOF PANELS FOLLOWING INSTALLATION TO REMOVE METAL DRILLINGS.
6. THIS DESIGN IS BASED ON USING ONLY METAL BUILDING COMPONENTS WHICH ARE PROPRIETARY TO BETCO. FURTHER, THE PROFESSIONAL ENGINEER'S SEAL IS INVALID UNLESS ONLY BETCO METAL BUILDING COMPONENTS ARE UTILIZED.
7. METAL STUDS (IF APPLICABLE) MAY REQUIRE FIELD CUTTING DEPENDING UPON THE EAVE HEIGHT OF THE STRUCTURE.
8. UNIT SIZES SHOWN ARE NOMINAL. ACTUAL CLEAR DIMENSIONS INSIDE UNITS MAY VARY ACCORDING TO FINAL DESIGN OF COMPONENTS.
9. THESE DRAWINGS ARE THE PROPERTY OF BETCO, INC. AND MAY NOT BE USED OR REPRODUCED IN WHOLE OR IN PART WITHOUT THE EXPRESS WRITTEN CONSENT OF BETCO, INC.
10. THESE DRAWINGS SHALL BE USED IN CONJUNCTION WITH AND COORDINATED WITH THE ARCHITECTURAL DRAWINGS AND OTHER CONTRACT DOCUMENTS.
11. THE GENERAL CONTRACTOR SHALL VERIFY THE SIZE AND LOCATION OF ALL SLEEVES, PADS, DEPRESSIONS, OPENINGS, ETC. AS REQUIRED BY THE VARIOUS TRADES.

CONSTRUCTION AND SAFETY:

1. THE CONTRACTOR IS SOLELY RESPONSIBLE FOR ALL SAFETY REGULATIONS, PROGRAMS AND PRECAUTIONS RELATED TO ALL WORK ON THIS PROJECT.
2. THE CONTRACTOR IS SOLELY RESPONSIBLE FOR THE PROTECTION OF PERSONS AND PROPERTY EITHER ON OR ADJACENT TO THE PROJECT AND SHALL PROTECT SAME AGAINST INJURY, DAMAGE OR LOSS.
3. MEANS AND METHODS OF CONSTRUCTION AND ERECTION OF STRUCTURAL MATERIALS ARE SOLELY THE CONTRACTORS RESPONSIBILITY.
4. STRUCTURAL DRAWINGS ARE INTENDED TO BE USED IN CONJUNCTION WITH THE DRAWINGS OF OTHER CONSULTANTS AND TRADES. THE CONTRACTOR SHALL COORDINATE THE VARIOUS REQUIREMENTS.
5. NO OPENINGS NOR ANY CHANGES IN SIZE, DIMENSION OR LOCATION SHALL BE MADE IN ANY STRUCTURAL ELEMENTS WITHOUT WRITTEN APPROVAL OF THE STRUCTURAL ENGINEER.
6. THE CONTRACTOR IS RESPONSIBLE FOR LIMITING THE AMOUNT OF CONSTRUCTION LOAD IMPOSED ON THE STRUCTURE. SUCH LOADS SHALL NOT EXCEED THE CAPACITY OF THE STRUCTURE AT ANY TIME.
7. THE STRUCTURE IS DESIGNED TO FUNCTION AS A UNIT UPON COMPLETION, AND ANY TEMPORARY BRACING OR SUPPORT REQUIRED TO ACCOMMODATE THE CONTRACTORS MEANS AND METHODS ARE THE RESPONSIBILITY OF THE CONTRACTOR.
8. THE CONTRACTOR SHALL INFORM THE STRUCTURAL ENGINEER, CLEARLY AND EXPLICITLY IN WRITING, OF ANY DEVIATION OR SUBSTITUTION OF REQUIREMENTS OF THE CONTRACT DOCUMENTS. CONTRACTOR IS NOT RELIEVED OF ANY REQUIREMENTS OF THE CONTRACT DOCUMENTS BY VIRTUE OF THE STRUCTURAL ENGINEERS REVIEW OF SHOP DRAWINGS, PRODUCT DATA, ETC., UNLESS THE CONTRACTOR HAS CLEARLY AND EXPLICITLY INFORMED THE STRUCTURAL ENGINEER IN WRITING OF ANY DEVIATIONS OR SUBSTITUTIONS AT TIME OF SUBMISSION, AND THE STRUCTURAL ENGINEER HAS GIVEN WRITTEN APPROVAL FOR THE SPECIFIC DEVIATIONS OR SUBSTITUTIONS.
9. ALL THINGS WHICH, IN THE OPINION OF THE CONTRACTOR, APPEAR TO BE DEFICIENCIES, OMISSIONS, CONTRADICTIONS OR AMBIGUITIES IN THE DRAWINGS OR SPECIFICATIONS, SHALL BE BROUGHT TO THE ATTENTION OF THE STRUCTURAL ENGINEER. CORRECTIONS OR WRITTEN INTERPRETATIONS SHALL BE ISSUED BEFORE AFFECTED WORK MAY PROCEED.
10. CONTRACTOR SHALL VERIFY ALL EXISTING CONDITIONS PRIOR TO ORDERING MATERIALS OR PROCEEDING WITH NEW WORK IN AREAS AFFECTED BY THE EXISTING CONDITIONS. STRUCTURAL ENGINEER SHALL BE INFORMED IN WRITING OF CONFLICTS BETWEEN EXISTING AND PROPOSED NEW CONSTRUCTION.
11. CONTRACTOR IS RESPONSIBLE FOR COORDINATING ALL DIMENSIONS SHOWN ON THE CONTRACT DOCUMENTS. INCONSISTENCIES ON THE STRUCTURAL DRAWINGS OR BETWEEN THE STRUCTURAL DRAWINGS AND ANY OTHER CONTRACT, SHOP, FABRICATION, OR OTHER DRAWINGS OR INFORMATION SHALL BE BROUGHT TO THE ATTENTION OF THE STRUCTURAL ENGINEER PRIOR TO PROCEEDING WITH AFFECTED WORK.
12. DO NOT SCALE THESE DRAWINGS, USE THE DIMENSIONS SHOWN.

RELEASE FOR CONSTRUCTION DATE 2/23/2026

NORTH CAROLINA PROFESSIONAL SEAL 029129 ENGINEER STEVEN W. SCHAUB

FEB 26 2026

BETCO, Inc.
228 Commerce Blvd.
Statesville, NC 28625
Limited Engineering License # D-0140

REVISIONS	DATE	BY

DATE: 12/11/2025
DRAWN BY: J. WATSON
SCALE: AS NOTED
APPROVED BY:

BETCO
228 COMMERCE BLVD.
STATESVILLE, NC 28625
(800)654-7813

PROJECT NAME: AMPLE STORAGE
PROJECT ADDRESS: ERWIN, NORTH CAROLINA
OWNER: LAMPE MANAGEMENT COMPANY, L.L.C.
PROJECT NO.: NC25223
SHEET TITLE: BUILDING NOTES
DRAWING NUMBER: CS2 OF 3

2018 APPENDIX B
BUILDING CODE SUMMARY FOR ALL COMMERCIAL PROJECTS
(EXCEPT 1 AND 2-FAMILY DWELLINGS AND TOWNHOUSES)
(Reproduce the following data on the building plans sheet 1 or 2)

Name of Project: Ample Storage
Address: 404 E. Jackson Blvd, Erwin, NC 28339
Owner/Authorized Agent: Guy Lampe Phone # (919) 934-3041 E-Mail:
Owned By: Private
Code Enforcement Jurisdiction: City

CONTACT:

DESIGNER	FIRM	NAME	LICENSE #	TELEPHONE #	E-MAIL
Architectural				( )	
Civil	CSD Engineering	John F Oglesby	32721	(919)624-0997	
Electrical	Cruse & Associates, PA	Randy Cruse	18909	(910) 892-4429	rcruse@cruseassociates.com
Fire Alarm				( )	
Plumbing				( )	
Mechanical	Cruse & Associates, PA	Randy Cruse	18909	(910) 892-4429	rcruse@cruseassociates.com
Sprinkler-Standpipe				( )	
Structural	S.E. Consultants	Steven W. Schaub	29129	(480) 946-2010	swss@seconsultants.com
Retaining Walls >5' High				( )	
Other				( )	

("Other" should include firms and individuals such as truss, precast, pre-engineered, interior designers, etc.)

2024 NC BUILDING CODE: New Building

2024 NC EXISTING BUILDING CODE: N/A N/A N/A
CONSTRUCTED: (date) _____ **CURRENT OCCUPANCY(S)** (Ch. 3): _____
RENOVATED: (date) _____ **PROPOSED OCCUPANCY(S)** (Ch. 3): _____

OCCUPANCY CATEGORY (Table 1604.5): **Current:** N/A **Proposed:** I

BASIC BUILDING DATA
Construction Type: II-B
Sprinklers: No N/A
Standpipes: No
Primary Fire District: Select one **Flood Hazard Area:** No
Special Inspections Required: No

Gross Building Area Table

FLOOR	EXISTING (SQ FT)	NEW (SQ FT)	SUB-TOTAL
Building H		24000	24000
TOTAL		24000	24000

ALLOWABLE AREA
Primary Occupancy Classification(s): Storage - S-1 N/A N/A N/A N/A N/A

Accessory Occupancy Classification(s): _____
Incidental Uses (Table 509): _____
Special Uses (Chapter 4 – List Code Sections): _____
Special Provisions: (Chapter 5 – List Code Sections): _____
Mixed Occupancy: No Separation: Select one Exception: _____

Select one

Actual Area of Occupancy A / *Allowable Area of Occupancy A* + *Actual Area of Occupancy B* / *Allowable Area of Occupancy B* ≤ 1

_____ + _____ + ….. = _____ ≤ 1.00

STORY NO.	DESCRIPTION AND USE	(A) BLDG AREA PER STORY (ACTUAL)	(B) TABLE 506.2[4] AREA	(C) AREA FOR FRONTAGE INCREASE[1,5]	(D) ALLOWABLE AREA PER STORY OR UNLIMITED[2,3]
Bldg H	S-1	24000	17500	0	17500

[1] Frontage area increases from Section 506.2 are computed thus:
a. Perimeter which fronts a public way or open space having 20 feet minimum width = _____ (F)
b. Total Building Perimeter = _____ (P)
c. Ratio (F/P) = _____ (F/P)
d. W = Minimum width of public way = _____ (W)
e. Percent of frontage increase I_f = 100[*F/P* – 0.25] x *W*/30 = _____ (%)
[2] Unlimited area applicable under conditions of Section 507.
[3] Maximum Building Area = total number of stories in the building x D (maximum3 stories) (506.2).
[4] The maximum area of open parking garages must comply with Table 406.5.4. The maximum area of air traffic control towers must comply with Table 412.3.1.
[5] Frontage increase is based on the unsprinklered area value in Table 506.2.

ALLOWABLE HEIGHT

	ALLOWABLE	SHOWN ON PLANS	CODE REFERENCE
Building Height in Feet (Table 504.3)	55 ft	10.0 ft	
Building Height in Stories (Table 504.4)	2	1	

[1] Provide code reference if the "Shown on Plans" quantity is not based on Table 504.3 or 504.4.

FIRE PROTECTION REQUIREMENTS

BUILDING ELEMENT	FIRE SEPARATION DISTANCE (FEET)	RATING REQ'D	RATING PROVIDED (W/__ * REDUCTION)	DETAIL # AND SHEET #	DESIGN # FOR RATED ASSEMBLY	SHEET # FOR RATED PENETRATION	SHEET # FOR RATED JOINTS
Structural Frame, including columns, girders, trusses		NC					
Bearing Walls							
Exterior	>= 10 ft						
North	>= 10 ft						
East	>= 10 ft						
West	>= 10 ft						
South	>= 10 ft						

Interior							
Nonbearing Walls and Partitions	N/A						
Exterior walls							
North	N/A						
East	N/A						
West	N/A						
South	N/A						
Interior walls and partitions	N/A						
Floor Construction Including supporting beams and joists	N/A						
Floor Ceiling Assembly	N/A						
Columns Supporting Floors							
Roof Construction, including supporting beams and joists							
Roof Ceiling Assembly	N/A						
Columns Supporting Roof	N/A						
Shaft Enclosures - Exit	N/A						
Shaft Enclosures - Other	N/A						
Corridor Separation	N/A						
Occupancy/Fire Barrier Separation		3 hr		ERC6314X	U419		
Party/Fire Wall Separation	N/A						
Smoke Barrier Separation	N/A						
Smoke Partition	N/A						
Tenant/Dwelling Unit/ Sleeping Unit Separation	N/A						
Incidental Use Separation	N/A						

* Indicate section number permitting reduction NC=Non-combustible

PERCENTAGE OF WALL OPENING CALCULATIONS N/A

FIRE SEPARATION DISTANCE (FEET) FROM PROPERTY LINES	DEGREE OF OPENINGS PROTECTION (TABLE 705.8)	ALLOWABLE AREA (%)	ACTUAL SHOWN ON PLANS (%)

LIFE SAFETY SYSTEM REQUIREMENTS

Emergency Lighting: Yes
Exit Signs: Yes
Fire Alarm: No
Smoke Detection Systems: No
Carbon Monoxide Detection: No

LIFE SAFETY PLAN REQUIREMENTS

Life Safety Plan Sheet #: LS-1
☒ Fire and/or smoke rated wall locations (Chapter 7)
☒ Assumed and real property line locations (if not on the site plan)

☒ Exterior wall opening area with respect to distance to assumed property lines (705.8)
☒ Occupancy Use for each area as it relates to occupant load calculation (Table 1004.1.2)
☒ Occupant loads for each area
☒ Exit access travel distances (1017)
☒ Common path of travel distances (Tables 1006.2.1 & 1006.3.2(1))
☒ Dead end lengths (1020.4)
☒ Clear exit widths for each exit door
☒ Maximum calculated occupant load capacity each exit door can accommodate based on egress width (1005.3)
☒ Actual occupant load for each exit door
☒ A separate schematic plan indicating where fire rated floor/ceiling and/or roof structure is provided for purposes of occupancy separation
☒ Location of doors with panic hardware (1010.1.10)
☒ Location of doors with delayed egress locks and the amount of delay (1010.1.9.7)
☒ Location of doors with electromagnetic egress locks (1010.1.9.9)
☒ Location of doors equipped with hold-open devices
☒ Location of emergency escape windows (1030)
☒ The square footage of each fire area (202)
☒ The square footage of each smoke compartment for Occupancy Classification I-2 (407.5)
☐ Note any code exceptions or table notes that may have been utilized regarding the items above

ACCESSIBLE DWELLING UNITS N/A
(SECTION 1107)

TOTAL UNITS	ACCESSIBLE UNITS REQUIRED	ACCESSIBLE UNITS PROVIDED	TYPE A UNITS REQUIRED	TYPE A UNITS PROVIDED	TYPE B UNITS REQUIRED	TYPE B UNITS PROVIDED	TOTAL ACCESSIBLE UNITS PROVIDED

ACCESSIBLE PARKING N/A
(SECTION 1106)

LOT OR PARKING AREA	TOTAL # OF PARKING SPACES REQUIRED	TOTAL # OF PARKING SPACES PROVIDED	# OF ACCESSIBLE SPACES PROVIDED: REGULAR WITH 5' ACCESS AISLE	VAN SPACES WITH 132" ACCESS AISLE	VAN SPACES WITH 8' ACCESS AISLE	TOTAL # ACCESSIBLE PROVIDED
TOTAL						

PLUMBING FIXTURE REQUIREMENTS N/A
(TABLE 2902.1)

USE		WATERCLOSETS MALE	WATERCLOSETS FEMALE	WATERCLOSETS UNISEX	URINALS	LAVATORIES MALE	LAVATORIES FEMALE	LAVATORIES UNISEX	SHOWERS /TUBS	DRINKING FOUNTAINS REGULAR	DRINKING FOUNTAINS ACCESSIBLE
SPACE	EXIST'G										
	NEW										
	REQ'D										

SPECIAL APPROVALS

Special approval: (Local Jurisdiction, Department of Insurance, OSC, DPI, DHHS, etc., describe below)

_____

ENERGY SUMMARY

ENERGY REQUIREMENTS:
The following data shall be considered minimum and any special attribute required to meet the energy code shall also be provided. Each Designer shall furnish the required portions of the project information for the plan data sheet. If performance method, state the annual energy cost for the standard reference design vs annual energy cost for the proposed design.

Existing building envelope complies with code: No

Exempt Building: Yes Provide code or statutory reference: N.C.G.S 143-138

Climate Zone: Select one

Method of Compliance: Select one
(If "Other" specify source here)_____

THERMAL ENVELOPE (Prescriptive method only)

Roof/ceiling Assembly (each assembly)
Description of assembly: _____
U-Value of total assembly: _____
R-Value of insulation: _____
Skylights in each assembly: _____
U-Value of skylight: _____
total square footage of skylights in each assembly: _____

Exterior Walls (each assembly)
Description of assembly: _____
U-Value of total assembly: _____
R-Value of insulation: _____
Openings (windows or doors with glazing)
U-Value of assembly: _____
Solar heat gain coefficient: _____
projection factor: _____
Door R-Values: _____

Walls below grade (each assembly)
Description of assembly: _____
U-Value of total assembly: _____
R-Value of insulation: _____

Floors over unconditioned space (each assembly)
Description of assembly: _____
U-Value of total assembly: _____
R-Value of insulation: _____

Floors slab on grade
Description of assembly: _____
U-Value of total assembly: _____
R-Value of insulation: _____
Horizontal/vertical requirement: _____
slab heated: _____

2024 APPENDIX B
BUILDING CODE SUMMARY FOR ALL COMMERCIAL PROJECTS
STRUCTURAL DESIGN
(PROVIDE ON THE STRUCTURAL SHEETS IF APPLICABLE)

DESIGN LOADS:

Importance Factors: Snow (I_S) 0.80
Seismic (I_E) 1.0

Live Loads: Roof 20 psf
Mezzanine N/A psf
Floor 125 psf

Ground Snow Load: 10 psf

Wind Load: Design Wind Speed V(ultimate)= 119 mph (ASCE 7-10)
Exposure Category B
Wind Base Shear (MWFRS):
Vx=32.6 k Vy=408 k

SEISMIC DESIGN CATEGORY: B
Provide the following Seismic Design Parameters:
Risk Category (Table 1604.5) I
Spectral Response Acceleration S_S =13.3 %g S_1 =6.5 %g
Site Classification (ASCE 7-10) D
Data Source: Presumptive
Basic structural system Building Frame
Seismic Base Shear:
Vx=2.400 k Vy=2.400 k

Analysis Procedure: Equivalent Lateral Force
Architectural, Mechanical, Components anchored? Yes

LATERAL DESIGN CONTROL: Wind

SOIL BEARING CAPACITIES:
Presumptive Bearing Capicity 3000 psf
Pile size, type, and capacity _____

2024 APPENDIX B
BUILDING CODE SUMMARY FOR ALL COMMERCIAL PROJECTS
MECHANICAL DESIGN
(PROVIDE ON THE MECHANICAL SHEETS IF APPLICABLE)

MECHANICAL SUMMARY

MECHANICAL SYSTEMS, SERVICE SYSTEMS AND EQUIPMENT

Thermal Zone **4A – Harnett County, NC**
winter dry bulb: _18 Deg. F._
summer dry bulb:_93 Deg. F.__

Interior design conditions

winter dry bulb: _59 Deg F.__
summer dry bulb: 80 Deg F. ___
relative humidity:_55%___

Building heating load: 120 MBH

Building cooling load: 15.5 Tons

Mechanical Spacing Conditioning System
Unitary
description of unit: SEE MECHANICAL PLANS___
heating efficiency: _8.5 HSPF_
cooling efficiency: _14.3 SEER_
size category of unit: _SEE MECHANICAL PLANS_
Boiler
Size category. If oversized, state reason.: _N/A___
Chiller
Size category. If oversized, state reason.: _N/A____

List equipment efficiencies: SEE MECHANICAL PLANS FOR SCHEDULE_

2024APPENDIX B
BUILDING CODE SUMMARY FOR ALL COMMERCIAL PROJECTS
ELECTRICAL DESIGN
(PROVIDE ON THE ELECTRICAL SHEETS IF APPLICABLE)

ELECTRICAL SUMMARY

ELECTRICAL SYSTEM AND EQUIPMENT **SEE ELECTRICAL DRAWINGS FOR RISER DIAGRAM AND PANEL SCHEDULE**

Method of Compliance: Energy Code - Prescriptive

Lighting schedule (each fixture type)	**SEE SCHEDULE**
lamp type required in fixture	" "
number of lamps in fixture	" "
ballast type used in the fixture	" "
number of ballasts in fixture	" "
total wattage per fixture	" "
total interior wattage specified vs. allowed (whole building or space by space)	" "
total exterior wattage specified vs. allowed	" "

Additional Efficiency Package Options
(When using the 2024 NCECC; not required for ASHRAE 90.1)
☒ C406.2 More Efficient HVAC Equipment Performance
☐ C406.3 Reduced Lighting Power Density
☐ C406.4 Enhanced Digital Lighting Controls
☐ C406.5 On-Site Renewable Energy
☐ C406.6 Dedicated Outdoor Air System
☐ C406.7 Reduced Energy Use in Service Water Heating

RELEASE FOR CONSTRUCTION DATE 2/23/2026

BETCO, Inc.
228 Commerce Blvd.
Statesville, NC 28625
Limited Engineering License # D-0140

NORTH CAROLINA PROFESSIONAL SEAL 029129 ENGINEER STEVEN W. SCHAUB
FEB 27 2026

REVISIONS	DATE	BY

DATE: 12/11/2025
DRAWN BY: J. WATSON
SCALE: AS NOTED
APPROVED BY:

BETCO
228 COMMERCE BLVD.
STATESVILLE, NC 28625
(800)654-7813

PROJECT NAME: AMPLE STORAGE
PROJECT ADDRESS: ERWIN, NORTH CAROLINA
OWNER: LAMPE MANAGEMENT COMPANY, L.L.C.
PROJECT NO.: NC25223
SHEET TITLE: APPENDIX B
DRAWING NUMBER: CS3 OF 3

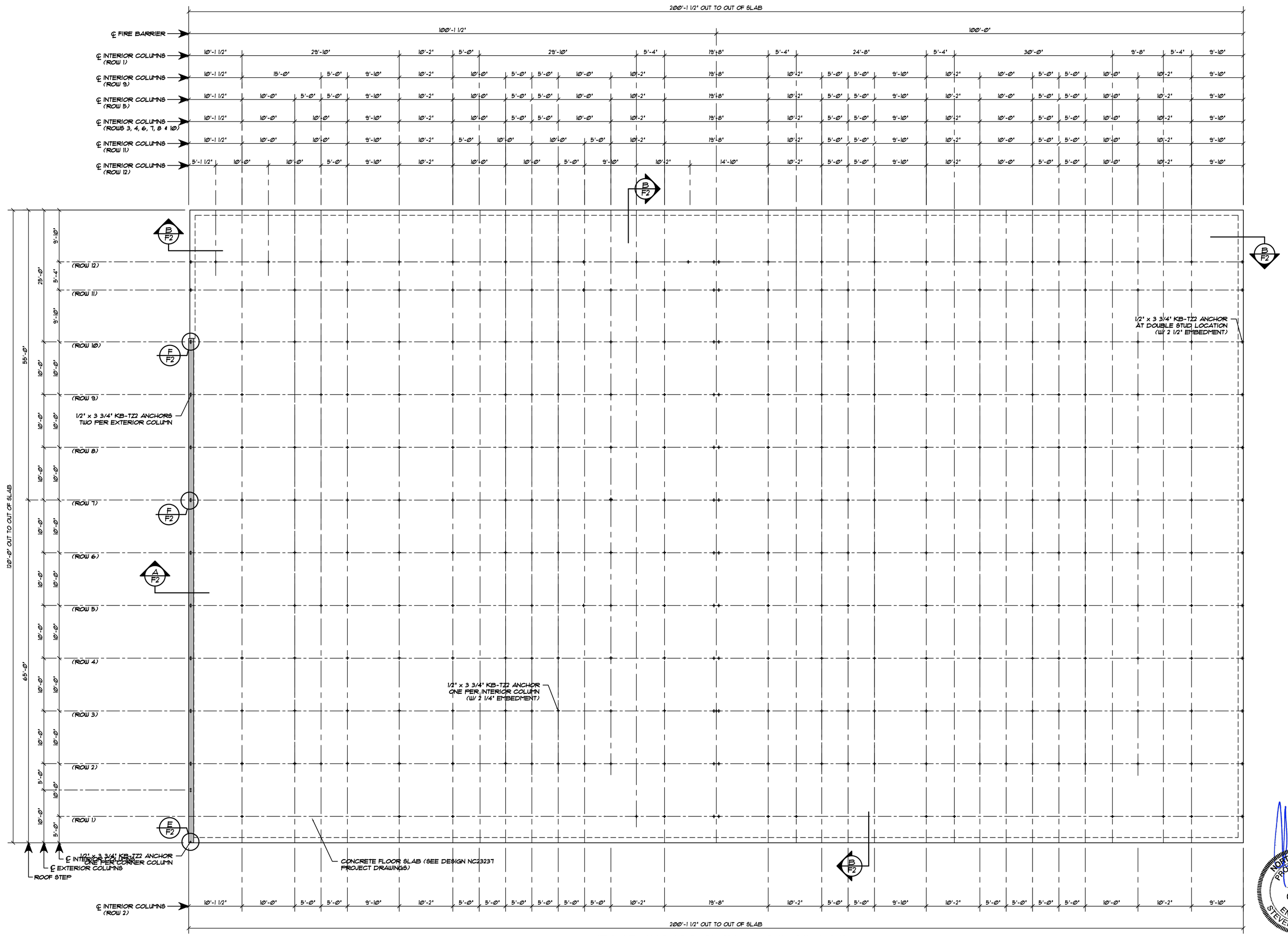

WEDGE ANCHOR PLAN . . . BUILDING "H"

SCALE: 0'-0" = 10'-0"

NOTE:
REFERENCE DRAWINGS NC23237 FOR FOUNDATION DESIGN.

NOTE:
KB-TZ2 ANCHORS ARE PROVIDED BY BETCO. EMBEDDED ANCHOR BOLTS IN SLAB ARE NOT REQUIRED BY BUYER.

NOTE:
FIELD LOCATE KB-TZ2 ANCHORS AT ALL 3 HOUR FIRE RESISTANT PARTITIONS

NOTE: . . . SEE OWNER FOR BUILDING ORIENTATION ON SITE

NORTH CAROLINA PROFESSIONAL SEAL 029129 ENGINEER STEVEN W. SCHAUB
FEB 26 2026

RELEASE FOR CONSTRUCTION DATE 2/23/2026

BETCO, Inc.
228 Commerce Blvd.
Statesville, NC 28625
Limited Engineering License # D-0140

REVISIONS	DATE	BY

DATE: 12/11/25
DRAWN BY: J. WATSON
SCALE: AS NOTED
APPROVED BY:

BETCO
228 COMMERCE BLVD.
STATESVILLE, NC 28625
(800)654-7813

PROJECT NAME: AMPLE STORAGE
PROJECT ADDRESS: ERWIN, NORTH CAROLINA
OWNER: LAMPE MANAGEMENT COMPANY, L.L.C.
PROJECT NO.: NC25223
SHEET TITLE: WEDGE ANCHOR PLAN & NOTES BUILDING "H"
DRAWING NUMBER: F1 OF 2

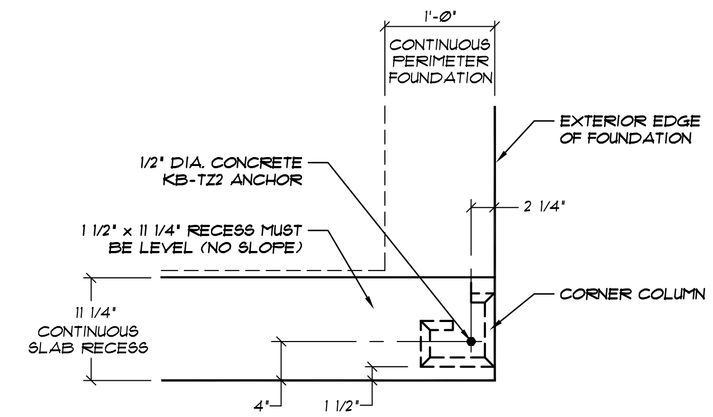

E / F2 CORNER WEDGE ANCHORS @ STUDWALL

NOT TO SCALE

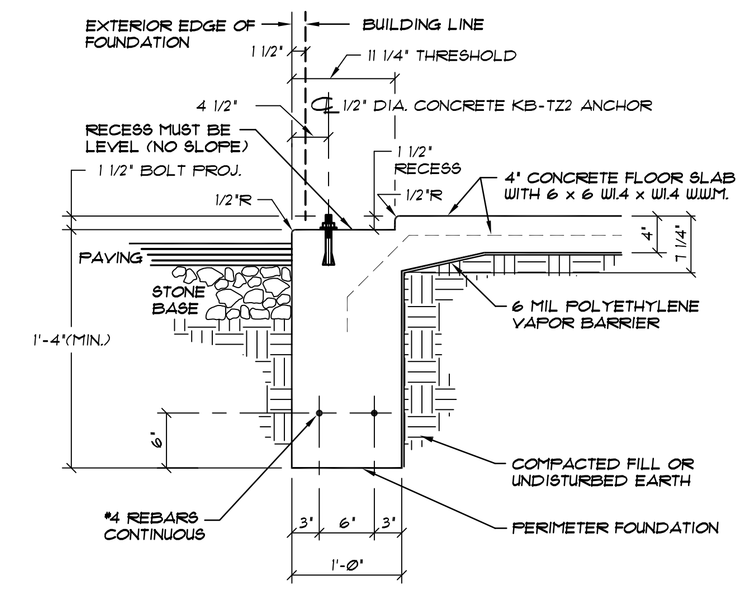

A / F2 TYPICAL PERIMETER FOUNDATION SECTION

(MONOLITHIC CONCRETE PLACEMENT)

NOT TO SCALE

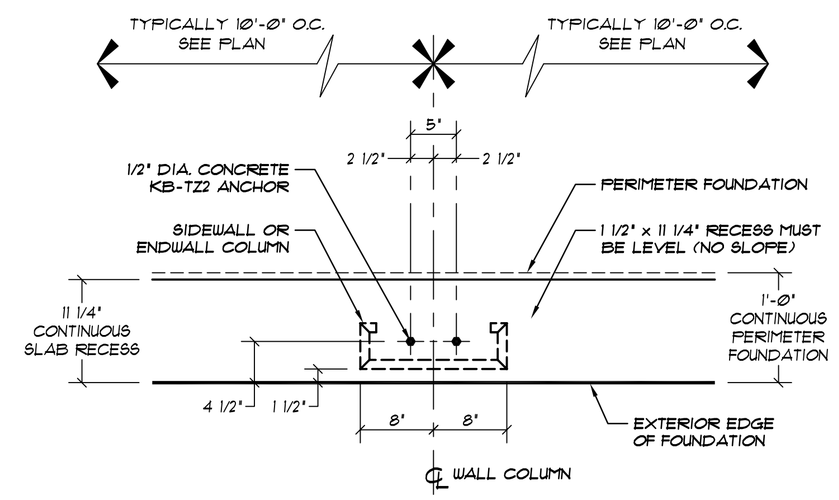

F / F2 TYPICAL WEDGE ANCHORS @ 16" WALL COLUMN

NOT TO SCALE

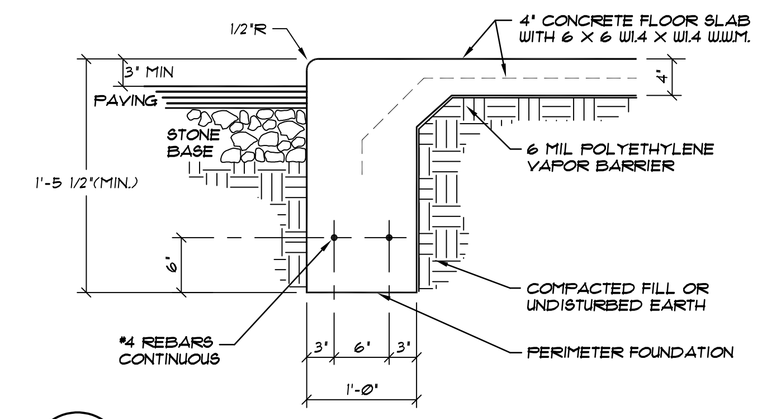

B / F2 PERIMETER FOUNDATION SECTION @ EXTERIOR STUDWALL

(MONOLITHIC CONCRETE PLACEMENT)

NOT TO SCALE

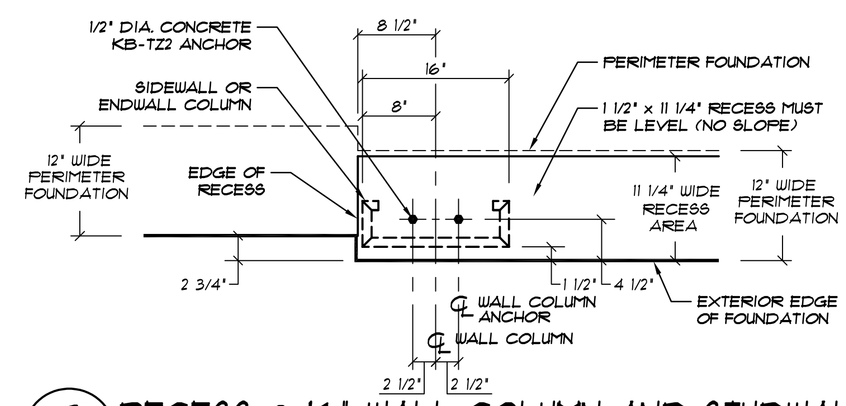

G / F2 RECESS @ 16" WALL COLUMN AND STUDWALL

NOT TO SCALE

FEB 26 2026

NOTE:
REFERENCE DRAWINGS NC23237 FOR FOUNDATION DETAILS.

RELEASE FOR CONSTRUCTION DATE 2/23/2026

BETCO, Inc.
228 Commerce Blvd.
Statesville, NC 28625
Limited Engineering License # D-0140

REVISIONS	DATE	BY

DATE: 12/11/25
DRAWN BY: J. WATSON
SCALE: AS NOTED
APPROVED BY:

BETCO
228 COMMERCE BLVD.
STATESVILLE, NC 28625
(800)654-7813

PROJECT NAME: AMPLE STORAGE
PROJECT ADDRESS: ERWIN, NORTH CAROLINA
OWNER: LAMPE MANAGEMENT COMPAY, L.L.C.
PROJECT NO.: NC25223
SHEET TITLE: FOUNDATION DETAILS BUILDING "H"
DRAWING NUMBER: F2 OF 2

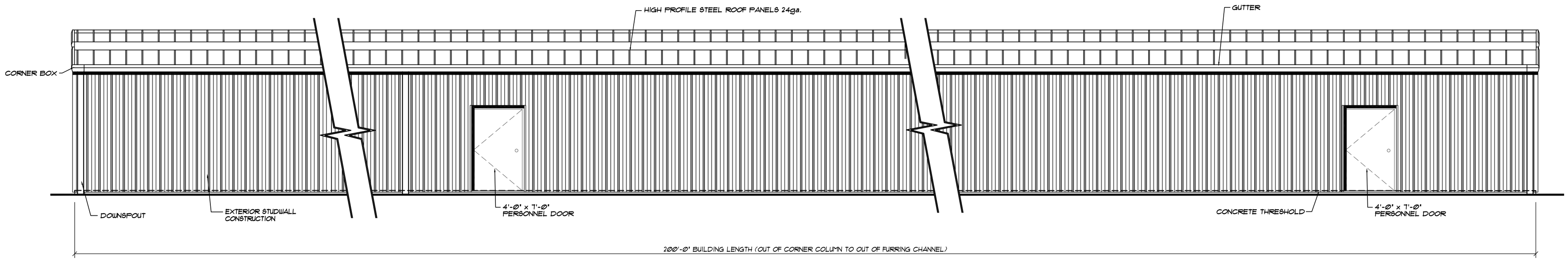

A/S1 SIDEWALL ELEVATION . . . BUILDING "H"

SCALE: 1/4" = 1'-0"

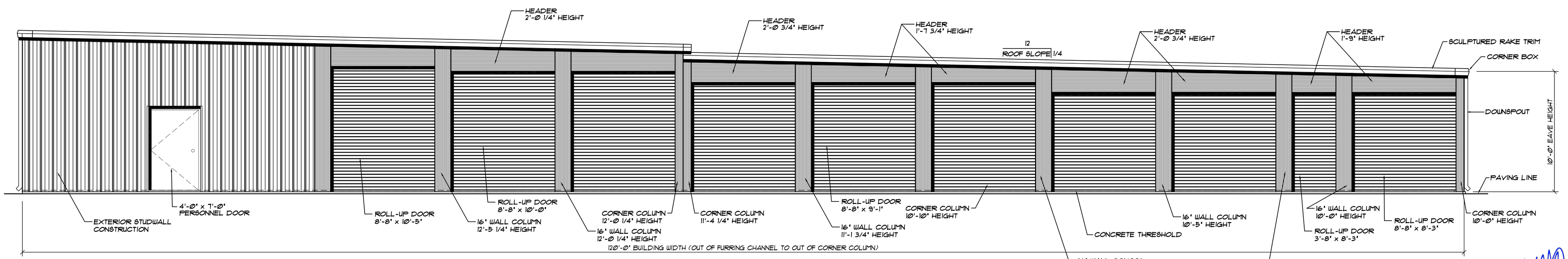

B/S1 ENDWALL ELEVATION . . . BUILDING "H"

SCALE: 1/4" = 1'-0"

NORTH CAROLINA PROFESSIONAL SEAL 029129 ENGINEER STEVEN W. SCHAIB

FEB 26 2026

RELEASE FOR CONSTRUCTION DATE 2/23/2026

NOTE: . . . SEE OWNER FOR BUILDING ORIENTATION ON SITE

NOTE:
DOWNSPOUTS LOCATIONS SHOWN FOR ELEVATION PURPOSE ONLY. REFER TO FLOOR PLAN SHEETS FOR LOCATIONS

BETCO, Inc.
228 Commerce Blvd.
Statesville, NC 28625
Limited Engineering License # D-0140

REVISIONS	DATE	BY

DATE: 12/11/25
DRAWN BY: J. WATSON
SCALE: AS NOTED
APPROVED BY:

BETCO
228 COMMERCE BLVD.
STATESVILLE, NC 28625
(800)654-7813

PROJECT NAME: AMPLE STORAGE
PROJECT ADDRESS: ERWIN, NORTH CAROLINA
OWNER: LAMPE MANAGEMENT COMPANY, L.L.C.
PROJECT NO.: NC25223
SHEET TITLE: ELEVATIONS & NOTES BUILDING "H"
DRAWING NUMBER: S1 OF 4

KEY TO ABBREVIATIONS:
IC = INTERIOR COLUMN HEIGHT (3 5/8" x 3 5/8" x 17ga.)
TRB = TOP OF ROOF BEAM A.F.F.
BA = BASE ANGLE
TC = TOP CHANNEL
VZ = VERTICAL ZEE
VC = VERTICAL CHANNEL
PC = PONY COLUMN HEIGHT (3 5/8" x 3 5/8" x 17ga.)
BMC = BOTTOM OF METAL CEE A.F.F.

NOTE: GENERAL STUDWALL CONSTRUCTION:
A) -ATTACH STUDS W/ #10 x 5/8" SDF'S EACH SIDE OF TRACK (4 PER STUD)
B) -WALLS MUST EXTEND FROM ROOF TO FLOOR DECK
C) -TOP TRACK MUST FOLLOW SLOPE OF ROOF LINE

(1) EXTERIOR STUDWALL CONSTRUCTION @ FLAT SLAB:
-6" x 1 5/8" FLANGE METAL STUDS @ 24" O.C. - 20ga.
-6" CONTINUOUS CEILING TRACK - 18ga.
-6" CONTINUOUS FLOOR TRACK - 18ga.
(SECURE FLOOR TRACK W/ 3/8" x 3" WEDGE ANCHORS (2" MIN. EMBEDMENT) @ 30" O.C. MAX)
-3 ROWS CONTINUOUS 20 Ga. FURRING CHANNELS
-PRE-PAINTED EXTERIOR 236-A WALL PANELS
-WALL PANEL BASE SUPPORT
-DRIP CAP (#660120)
*-6" THICK FIBERGLASS INSULATION
*-4 MIL POLYETHYLENE VAPOR BARRIER
*-23Ø LINER PANELS @ INTERIOR (ATTACH EACH PANEL TO BASE 4 TOP TRACK WITH 4 EACH #10 x 5/8" SDF's)
*-J-TRIM @ TOP OF LINER PANELS

(3) INSULATED LOAD BEARING STUDWALL:
-3 5/8" x 1 5/8" FLANGE METAL STUDS @ 24" O.C. - 20ga.
-3 5/8" CONTINUOUS CEILING TRACK - 18ga.
-3 5/8" CONTINUOUS FLOOR TRACK - 18ga.
(SECURE FLOOR TRACK W/ 3/8" x 3" WEDGE ANCHORS (2" MIN. EMBEDMENT) @ 30" O.C. MAX)
*-4" THICK FIBERGLASS INSULATION
*-4 MIL POLYETHYLENE VAPOR BARRIER
*-23Ø LINER PANELS (EACH SIDE - ATTACH EACH PANEL TO BASE 4 TOP TRACK WITH 4 EACH #10 x 5/8" SDF's)
*-J-TRIM @ TOP OF LINER PANELS

(4) INSULATED NON-LOAD BEARING STUDWALL:
-3 5/8" x 1 5/8" FLANGE METAL STUDS @ 24" O.C. - 20ga.
-3 5/8" CONTINUOUS FLOOR AND CEILING TRACK - 20ga.
(SECURE FLOOR TRACK TO CONCRETE FLOOR SLAB WITH 1/8" PDF's @ 24" O.C.)
*-4" THICK FIBERGLASS INSULATION
*-4 MIL POLYETHYLENE VAPOR BARRIER
*-23Ø LINER PANELS (EACH SIDE - ATTACH EACH PANEL TO BASE 4 TOP TRACK WITH 4 EACH #10 x 5/8" SDF's)
*-J-TRIM @ TOP OF LINER PANELS

(11) FIRE RESISTANT PARTITION . . . 3 HOUR RATED
UL # U419 . . . (NON-LOAD BEARING) (SEE ERC 614X)
-3 5/8" METAL STUDS @ 24" O.C. - 20ga
-3 5/8" CONTINUOUS FLOOR and CEILING TRACK - 20ga
(TOP TRACK MUST FOLLOW SLOPE OF ROOF DECK)
(SECURE BOTTOM TRACK w/ 1/8" PDF's AT 24" O.C.)
-5/8" GYPSUM BOARD (X-RATED) 3 LAYERS EACH SIDE IT MUST BE PLACED SUCH THAT ALL JOINTS ARE VERTICAL.
-GYPSUM BOARD (NOT BY BETCO) SHALL BE ATTACHED TO STUDS, FLOOR AND CEILING TRACK USING TYPE "S" SELF-TAPPING SCREWS ALONG EDGES OF BOARD SPACED 8" O.C. AND 12" O.C. IN THE FIELD.
-VINYL OR CASE-IN, DRY OR PRE-MIXED JOINT COMPOUND APPLIED IN TWO COATS TO JOINTS SCREW-HEADS. PERFORATED PAPER TAPE, 2" WIDE, EMBEDDED IN FIRST LAYER OF COMPOUND OVER ALL JOINTS.

(12) EXTERIOR STUDWALL CONSTRUCTION @ FLAT SLAB:
-3 5/8" METAL STUDS @ 24" O.C. - 14ga
-3 5/8" CONTINUOUS FLOOR AND CEILING TRACK - 18ga. - FASTEN w/ 3/8" x 3" WEDGE ANCHOR (2" MIN. EMBEDMENT) @ 30" O.C. MAX
-3 ROWS CONTINUOUS 20ga. FURRING CHANNELS
-PRE-PAINTED EXTERIOR 236-A WALL PANELS
-WALL PANEL BASE SUPPORT
-DRIP CAP (#660120)
-BLOCK STUDS AT MID-HEIGHT AS SHOWN IN ERC631X

NOTE: GENERAL STUDWALL CONSTRUCTION:
A) -ATTACH STUDS W/ #10 x 5/8" SDF'S EACH SIDE OF TRACK (4 PER STUD)
B) -WALLS MUST EXTEND FROM ROOF TO FLOOR DECK AND INTO WALL COLUMN CAVITY:
C) -TOP TRACK MUST FOLLOW SLOPE OF ROOF LINE.

JAMB	ROLL-UP HEADER	SWING DOOR HEADER
8'-6"	18"	16 1/2"

LEGEND:
14ga. INTERIOR COLUMN
22ga. INTERIOR COLUMN
CLIMATE CONTROL

NOTE COLUMN ORIENTATION @ CORRIDORS PARALLEL TO ROOF BEAMS
← CORRIDOR →

NORTH CAROLINA PROFESSIONAL SEAL 029129 ENGINEER STEVEN W. SCHAUB
FEB 26 2026

NOTE: . . . SEE OWNER FOR BUILDING ORIENTATION ON SITE

NOTE: INSTALL SA-2 ANGLE TO 15'-0" & 20'-0" ROOF BEAMS AT MID-SPAN. RUN VERTICALLY TO CLIP IN FLOOR TO PROVIDE TEMPORARY BRACING PRIOR TO INSTALLING ROOF. BRACE WILL PREVENT BEAM TWIST.

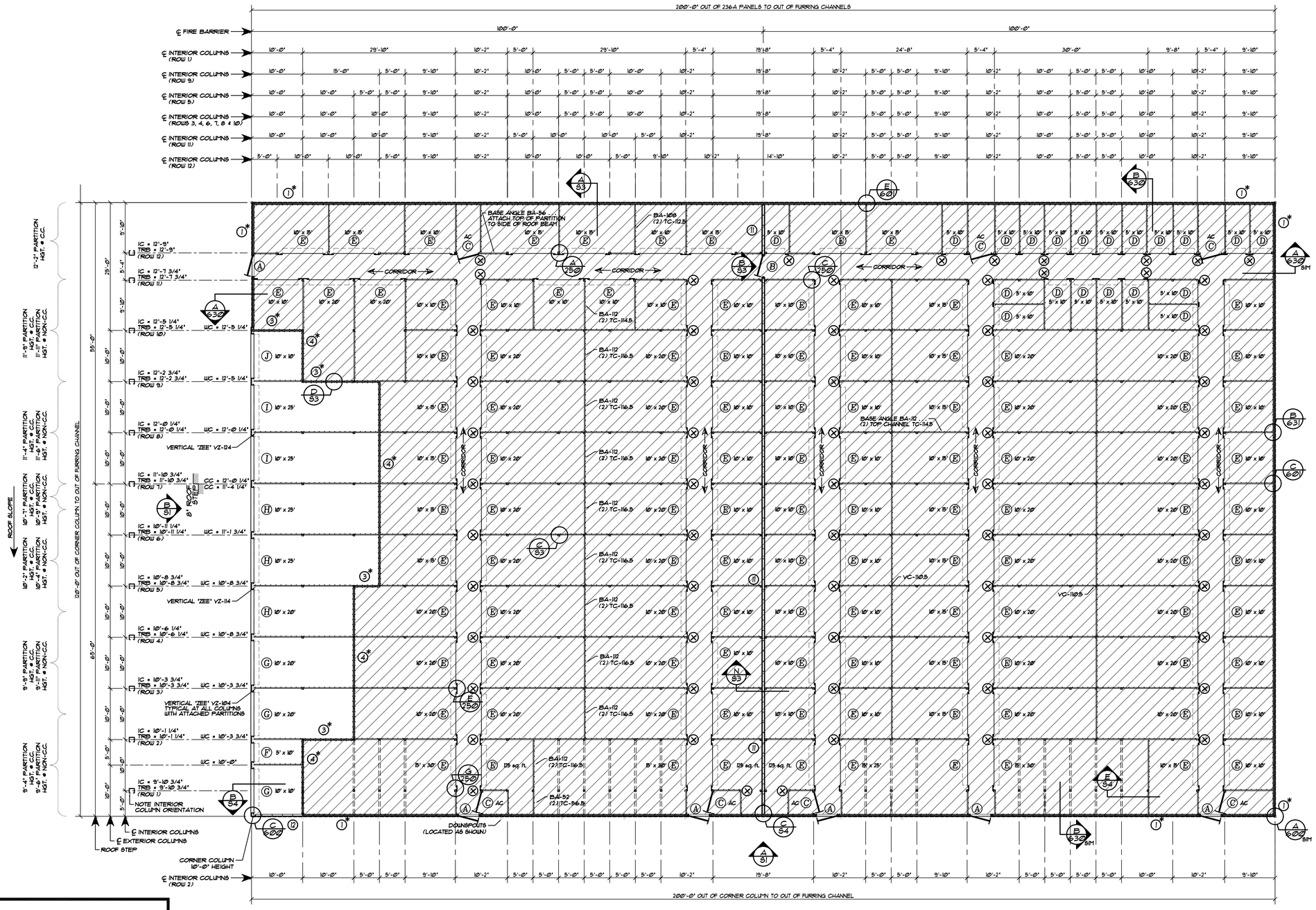

FLOOR PLAN . . . BUILDING "H"
SCALE: 0.8" = 10'-0"

NOTE:
UNIT SIZES SHOWN ARE NOMINAL. ACTUAL CLEAR DIMENSIONS INSIDE UNITS MAY VARY ACCORDING TO FINAL DESIGN OF COMPONENTS.

NOTE: BLOCK ALL LOAD-BEARING INTERIOR & EXTERIOR STUDWALLS AS SHOWN ON ERC DETAIL A/631.

NOTE:
SEE ERC602X FOR EXTERIOR SWING DOOR FRAMING IN STUDWALL.

STUDWALL LEGEND — BUILDING "H"

	INTERIOR STUDWALL	EXTERIOR STUDWALL
DESCRIPTION	UNINSULATED	INSULATED
(1) EXTERIOR STUDWALL CONSTRUCTION AT FLAT SLAB (BLOCK @ MID-HGT.) (6" STUDS)	0 L.F.	535 L.F.
(3) LOAD BEARING STUDWALL	0 L.F.	40 L.F.
(4) NON-LOAD BEARING STUDWALL	0 L.F.	95 L.F.
(11) FIRE RESISTANT PARTITION . . . 3 HOUR RATED	120 L.F.	0 L.F.
(12) EXTERIOR STUDWALL CONSTRUCTION AT FLAT SLAB (BLOCK @ MID-HGT.) (3 5/8" STUDS)	10 L.F.	0 L.F.

NOTE #1: SEE BLOCKING DETAIL A/631 ON ERC631X

DOOR SCHEDULE

ID	DOOR SIZE	TYPE
A	4'-0" x 7'-0" (4070 - 1) (ERC254X)	SOLID PERSONNEL
B	4'-0" x 7'-0" (4070 - 1 - A) (ERC254X)	THREE HOUR RATED
C	3'-0" x 7'-0"	INTERIOR SWING DOOR WITH LOUVER
D	3'-8" x 7'-0"	INTERIOR ROLL-UP
E	8'-0" x 7'-0"	INTERIOR ROLL-UP
F	3'-8" x 8'-3"	EXTERIOR ROLL-UP DOOR
G	3'-8" x 8'-3"	EXTERIOR ROLL-UP DOOR
H	8'-8" x 9'-1"	EXTERIOR ROLL-UP DOOR
I	8'-8" x 10'-0"	EXTERIOR ROLL-UP DOOR
J	8'-8" x 10'-5"	EXTERIOR ROLL-UP DOOR

BETCO, Inc.
228 Commerce Blvd.
Statesville, NC 28625
Limited Engineering License # D-0140

REVISIONS	DATE	BY

DATE: 12/11/25
DRAWN BY: J. WATSON
SCALE: AS NOTED
APPROVED BY:

BETCO
228 COMMERCE BLVD.
STATESVILLE, NC 28625
(800)654-7813

PROJECT NAME: AMPLE STORAGE
PROJECT ADDRESS: ERWIN, NORTH CAROLINA
OWNER: LAMPE MANAGEMENT COMPANY, L.L.C.
PROJECT NO.: NC25223
SHEET TITLE: FLOOR PLAN & NOTES BUILDING "H"
DRAWING NUMBER: S2 OF 4

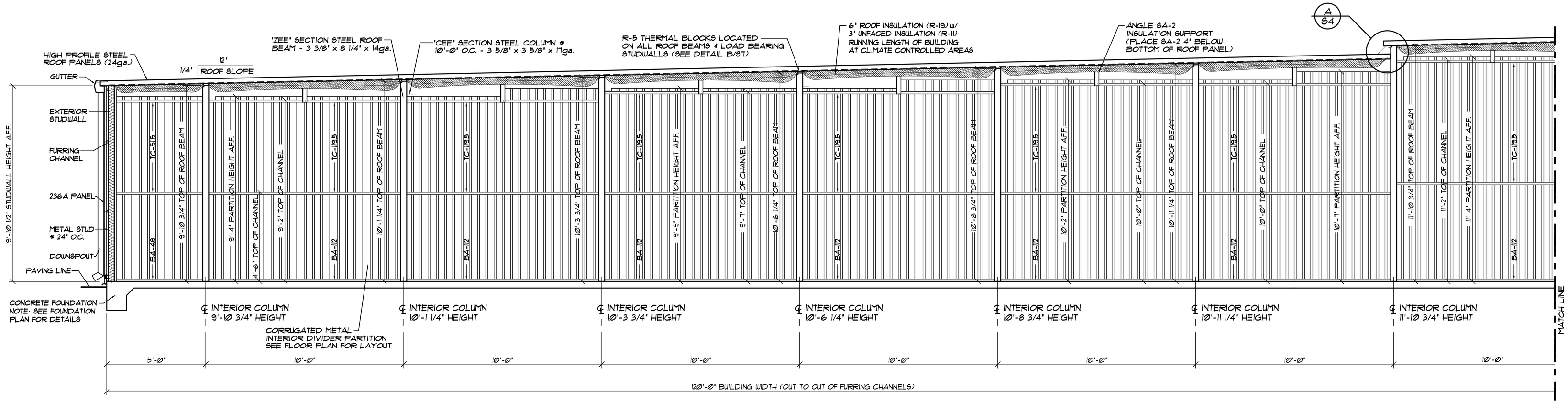

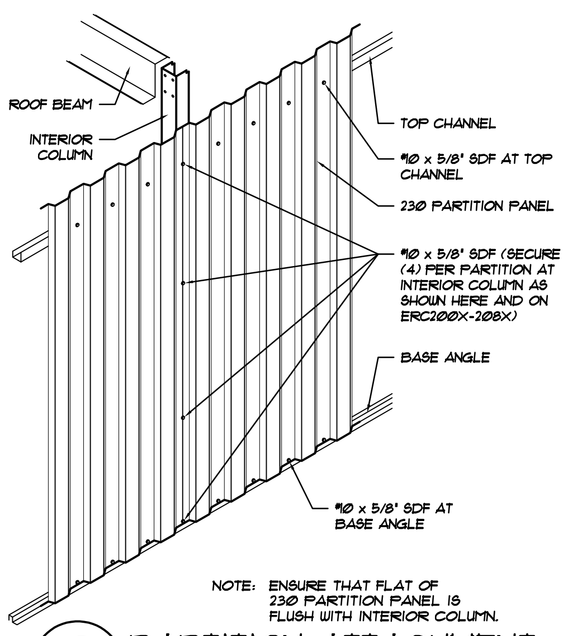

NOTE: ENSURE THAT FLAT OF 230 PARTITION PANEL IS FLUSH WITH INTERIOR COLUMN.

C / S3 PARTITION ATTACHMENT @ INTERIOR COLUMNS

NOT TO SCALE

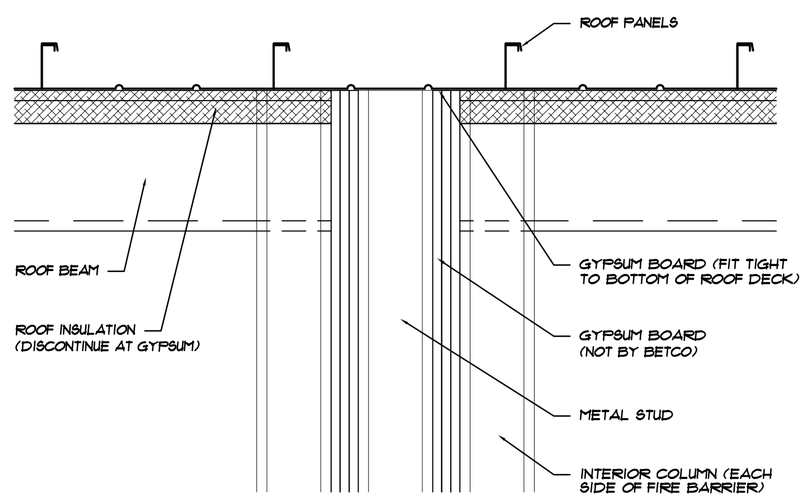

N / S3 SECTION @ 3 HOUR FIRE BARRIER

NOT TO SCALE

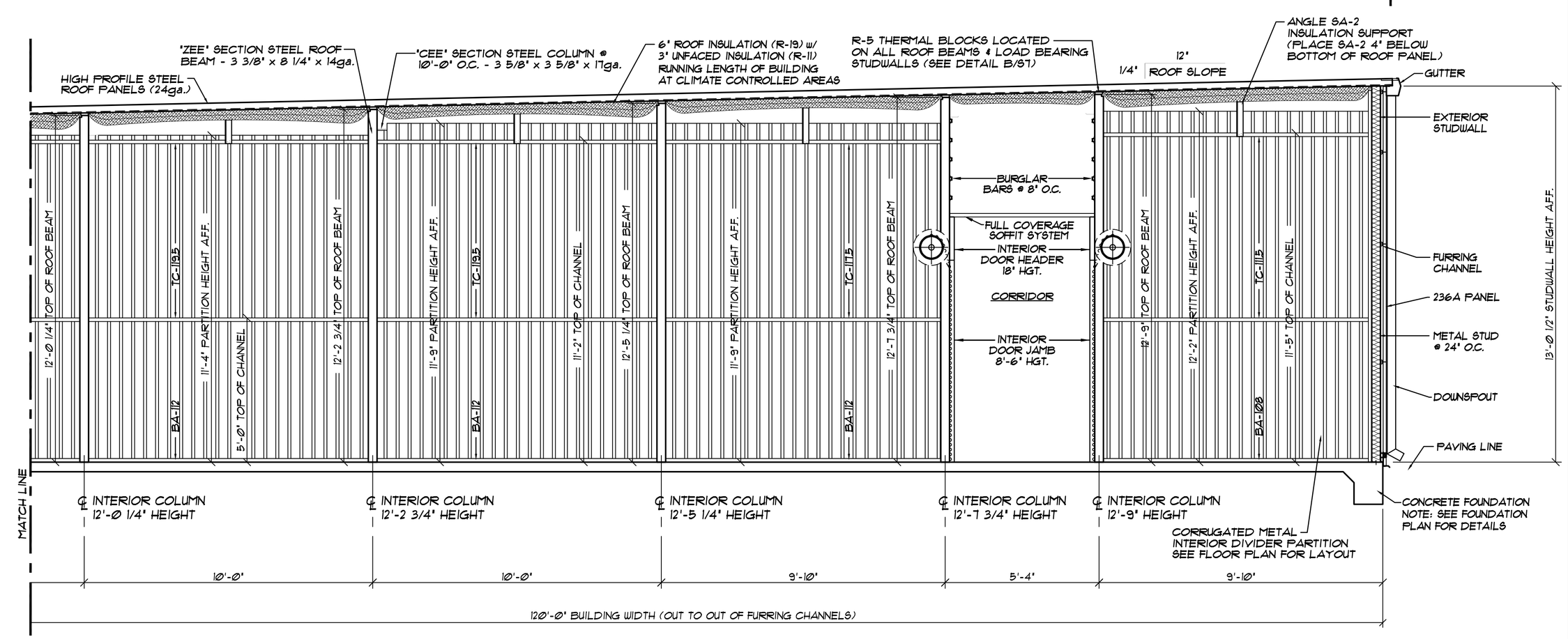

A / S3 120'-0" WIDE CROSS SECTION . . . BUILDING "H"

SCALE: 3/8" = 1'-0"

NOTE:
ROUGH OPENING SHALL BE 4" WIDER THAN DOOR WIDTH AND 2" TALLER THAN DOOR HEIGHT, BASED ON A 2" DOOR FRAME. VERIFY ALL SIZES REQUIRED FOR PURCHASED DOOR PRIOR TO CONSTRUCTION.

T11195 - 'ZEE' TRIM @ 3HR FIRE DOOR (1" x 13/16" x 1" - 20ga PP) 10'-1" LONG

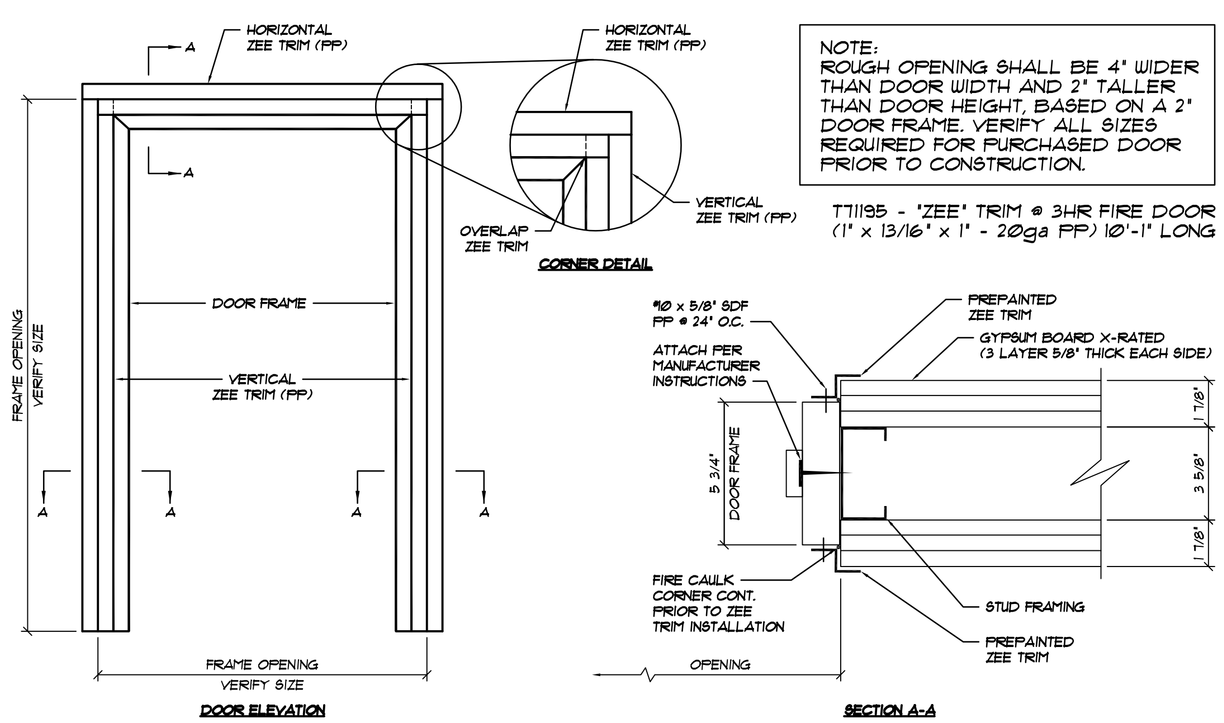

B / S3 3 HOUR FIRE RATED DOOR INSTALLATION DETAIL

NORTH CAROLINA PROFESSIONAL SEAL 029129 ENGINEER STEVEN W. SCHAUB

FEB 26 2026

RELEASE FOR CONSTRUCTION DATE 2/23/2026

BETCO, Inc.
228 Commerce Blvd.
Statesville, NC 28625
Limited Engineering License # D-0140

REVISIONS	DATE	BY

DATE: 12/11/25
DRAWN BY: J. WATSON
SCALE: AS NOTED
APPROVED BY:

BETCO
228 COMMERCE BLVD.
STATESVILLE, NC 28625
(800)654-7813

PROJECT NAME: AMPLE STORAGE
PROJECT ADDRESS: ERWIN, NORTH CAROLINA
OWNER: LAMPE MANAGEMENT COMPANY, L.L.C.
PROJECT NO.: NC25223
SHEET TITLE: CROSS SECTION AND DETAILS BUILDING "H"
DRAWING NUMBER: S3 OF 3

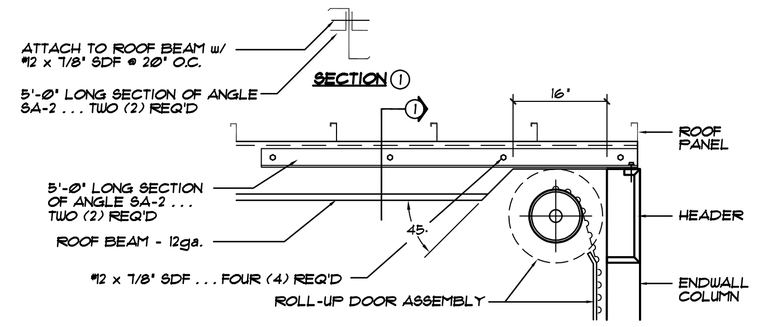

NOTE... NOTCH BEAM & INSTALL ANGLE PRIOR TO ROOF INSTALLATION.

B/S4 INSTALLATION OF DOOR @ ROOF BEAM

NOT TO SCALE

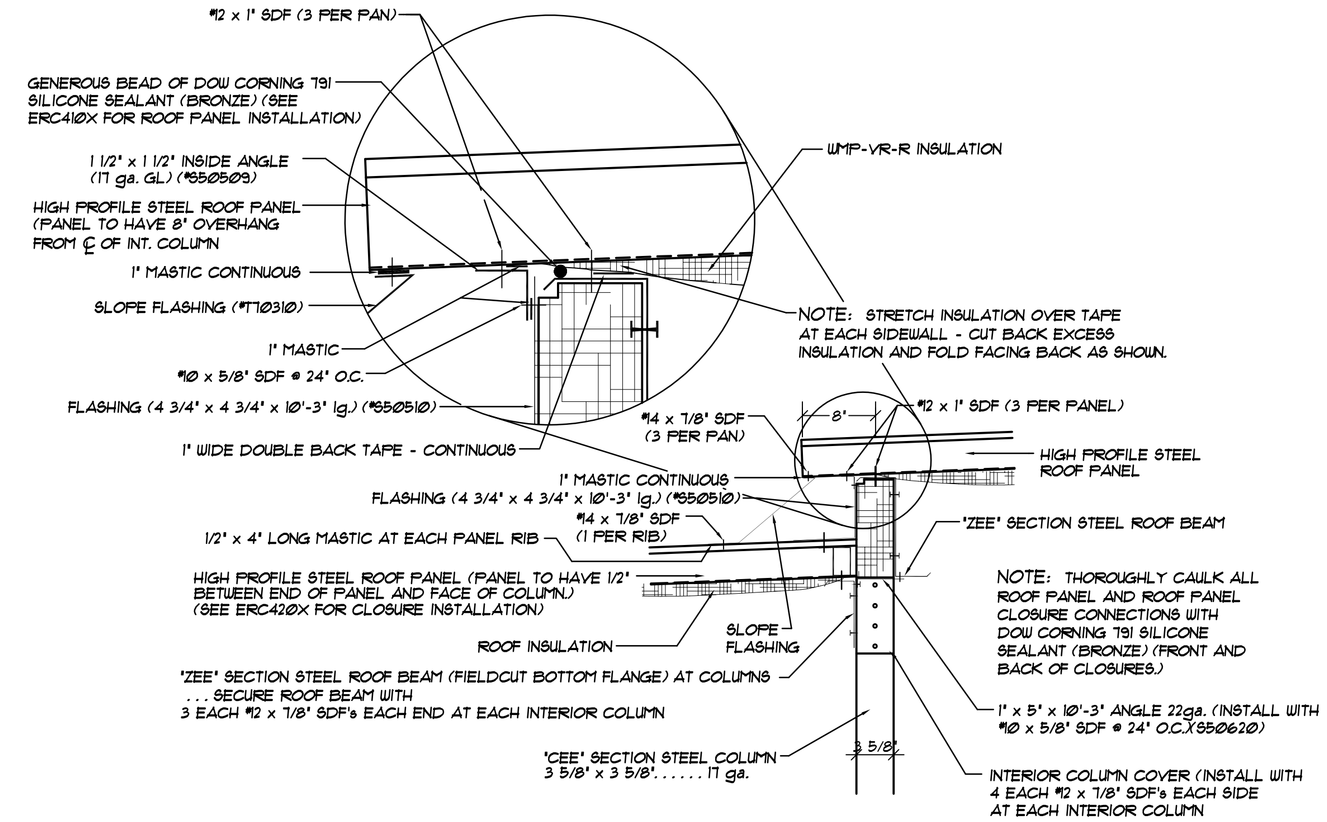

A/S4 SECTION @ ROOF PANEL STEP @ COLUMN/ROOF BEAM

NOT TO SCALE

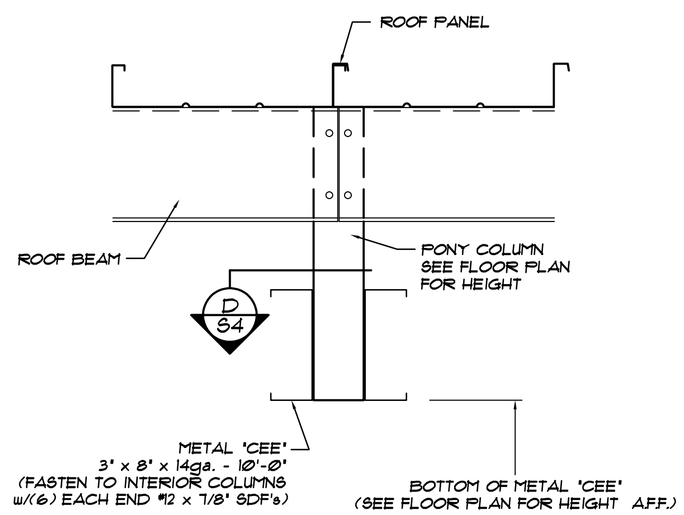

E/S4 SECTION @ LONG ROOF SPANS

NOT TO SCALE

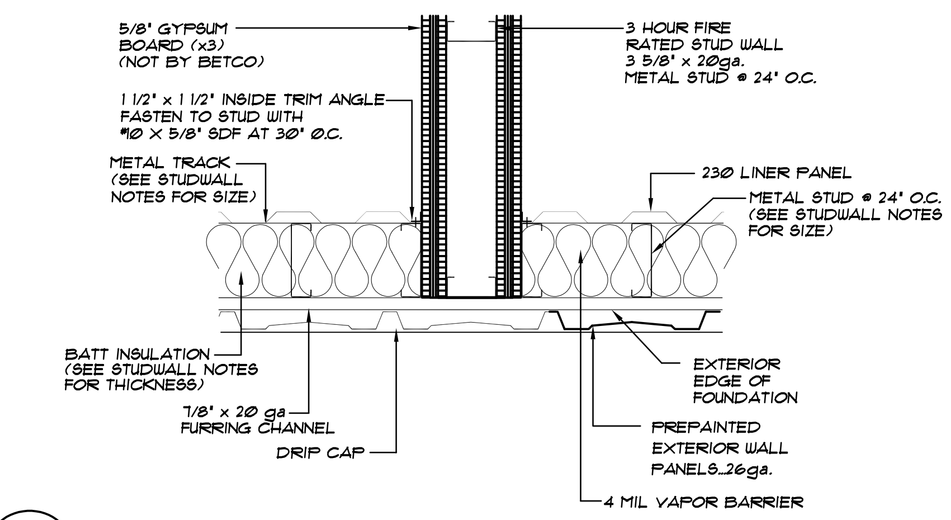

C/S4 3 HOUR FIRE BARRIER AT INSULATED EXTERIOR STUDWALL

NOT TO SCALE

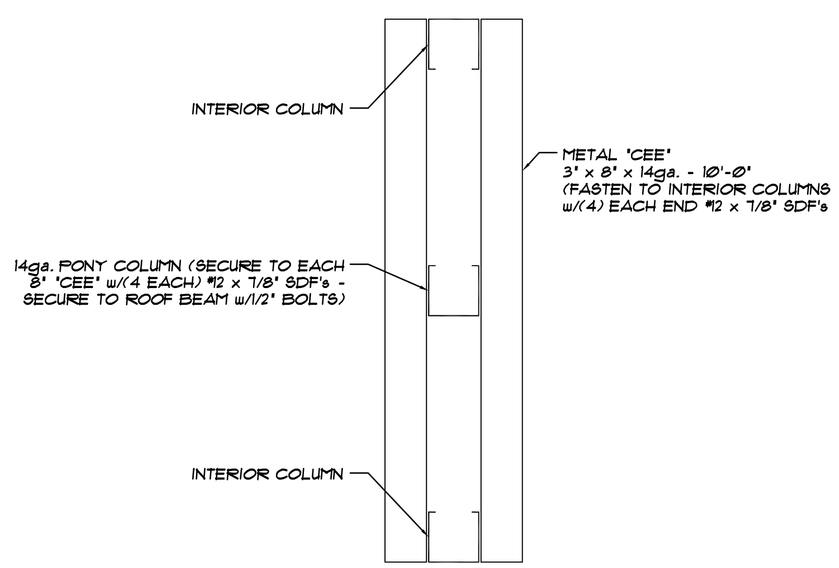

D/S4 PLAN VIEW @ METAL 'CEE'

NOT TO SCALE

FEB 26 2026

RELEASE FOR CONSTRUCTION DATE 2/23/2026

BETCO, Inc.
228 Commerce Blvd.
Statesville, NC 28625
Limited Engineering License # D-0140

REVISIONS	DATE	BY

DATE: 12/11/25
DRAWN BY: J. WATSON
SCALE: AS NOTED
APPROVED BY:

BETCO
228 COMMERCE BLVD.
STATESVILLE, NC 28625
(800)654-7813

PROJECT NAME: AMPLE STORAGE
PROJECT ADDRESS: ERWIN, NORTH CAROLINA
OWNER: LAMPE MANAGEMENT COMPANY, L.L.C.
PROJECT NO.: NC25223
SHEET TITLE: BUILDING DETAILS BUILDING "H"
DRAWING NUMBER: S4 OF 4

LIFE SAFETY PLAN REQUIREMENTS:

- ☒ FIRE AND/OR SMOKE RATED WALL LOCATIONS (CHAPTER 7) – SEE NOTE 1
- ☒ ASSUMED AND REAL PROPERTY LINE LOCATIONS – SEE NOTE 2
- ☒ EXTERIOR WALL OPENING AREA WITH RESPECT TO DISTANCE TO ASSUMED PROPERTY LINES (705.8) – SEE NOTE 3
- ☒ OCCUPANCY TYPES FOR EACH AREA AS IT RELATES TO OCCUPANT LOAD CALCULATION (TABLE 1004.5)
- ☒ OCCUPANT LOADS FOR EACH AREA
- ☒ EXIT ACCESS TRAVEL DISTANCES (1017)
- ☒ COMMON PATH OF TRAVEL DISTANCES (1006.2.1 & 1006.3.3)
- ☒ DEAD END LENGTHS (1020.5) – SEE NOTE 4
- ☒ CLEAR EXIT WIDTHS FOR EACH EXIT DOOR
- ☒ MAXIMUM CALCULATED OCCUPANT LOAD CAPACITY EACH EXIT DOOR CAN ACCOMMODATE BASED ON EGRESS WIDTH (1005.3)
- ☒ ACTUAL OCCUPANT LOAD FOR EACH EXIT DOOR
- ☒ A SEPARATE SCHEMATIC PLAN INDICATING WHERE FIRE RATED FLOOR/CEILING AND/OR ROOF STRUCTURE IS PROVIDED FOR PURPOSES OF OCCUPANCY SEPARATION. SEE NOTE 5
- ☒ LOCATION OF DOORS WITH PANIC HARDWARE (1010.2.9) – SEE NOTE 6
- ☒ LOCATION OF DOORS WITH DELAYED EGRESS LOCKS AND AND THE AMOUNT OF DELAY (1010.2.11) – SEE NOTE 7
- ☒ LOCATION OF DOORS WITH ELECTROMAGNETIC EGRESS LOCKS (1008.1.9.8) – SEE NOTE 7
- ☒ LOCATION OF DOORS EQUIPPED WITH HOLD-OPEN DEVICES – SEE NOTE 7
- ☒ LOCATION OF EMERGENCY ESCAPE WINDOWS (1031) – SEE NOTE 7
- ☒ THE SQUARE FOOTAGE OF EACH FIRE AREA (202) – SEE NOTE 8
- ☒ THE SQUARE FOOTAGE OF EACH SMOKE COMPARTMENT (407.5) – SEE NOTE 9
- ☐ NOTE ANY CODE EXCEPTIONS OR TABLE NOTES THAT MAY HAVE BEEN UTILIZED REGARDING THE ITEMS ABOVE

LIFE SAFETY PLAN NOTES:

1. SEE LEGEND FOR RATED WALLS.
2. ALL ASSUMED AND REAL PROPERTY LINES $\geq$20'
3. ASSUMED PROPERTY LINES = 15'; UNLIMITED; 705.8.1 EXC. 2
4. NO DEAD ENDS OVER 10'; 20' ALLOWED
5. NO RATING REQUIRED FOR THIS STRUCTURE.
6. PANIC HARDWARE NOT REQUIRED.
7. NO DELAYED EGRESS LOCKS, ELECTROMAGNETIC LOCKS, HOLD OPEN DEVICES, OR EMERGENCY ESCAPE WINDOWS
8. FIRE AREAS DO NOT EXCEED CODE ALLOWANCE
9. BUILDING MEETS CODE REQUIREMENTS WITHOUT SUBDIVISION INTO SMOKE COMPARTMENTS; NO SMOKE COMPARTMENTS

EXIT REQUIREMENTS: NUMBER AND ARRANGEMENTS OF EXITS

FLOOR, ROOM OR SPACE DESIGNATION	MINIMUM[2] NO. OF EXITS		TRAVEL DISTANCE		ARRANGEMENT MEANS OF EGRESS [1,3] (SECTION 1016–1021)	
	REQ'D.	SHOWN ON PLANS	ALLOWABLE TRAVEL DISTANCE (TABLE 1017.2)	ACTUAL TRAVEL DISTANCE SHOWN ON PLANS	REQUIRED DISTANCE BETWEEN EXIT DOORS	ACTUAL DISTANCE SHOWN ON PLANS
S–1	2	6	200'	141'–3"	117'–0"	146'–0"

1. CORRIDOR DEAD ENDS (SECTION 1020.4)
2. BUILDINGS W/SINGLE EXITS (TABLE 1006.3.2(2)), SPACES W/ONE EXIT OR EXIT ACCESS DOORWAY (TABLE 1006.2.1)
3. COMMON PATH OF TRAVEL (SECTION 1029.8)

EXIT WIDTH

USE GROUP OR SPACE DESCRIPTION	(a)	(b)		(c)		EXIT WIDTH (In)			
	AREA[1] SQ. FT.	AREA[1] PER OCCUPANT (TABLE 1004.5)	CALCULATED OCCUPANT LOAD (a/b)	EGRESS WIDTH PER OCCUPANT (TABLE 1005.3.2)		REQUIRED WIDTH (SECTION 1005.1) (a/b) x c		ACTUAL WIDTH SHOWN ON PLANS	
				STAIR	LEVEL	STAIR	LEVEL	STAIR	LEVEL
S–1	24,000	500 GROSS	48	N/A	.2	N/A	9.6"	N/A	282"
TOTAL	24,000								

1. SEE TABLE 1004.5 TO DETERMINE WHETHER NET OR GROSS AREA IS APPLICABLE SEE DEFINITION "AREA, GROSS" AND "AREA, NET" (SECTION 202)
2. MINIMUM STAIRWAY WIDTH (SECTION 1011.2); MIN. CORRIDOR WIDTH (SECTION 1020.2); MIN. DOOR WIDTH (SECTION 1010.1.1)
3. MINIMUM WIDTH OF EXIT PASSAGEWAY (SECTION 1024.2)
4. SEE SECTION 1005.6 FOR CONVERGING EXITS.
5. THE LOSS OF ONE MEANS OF EGRESS SHALL NOT REDUCE THE AVAILABLE CAPACITY TO LESS THAN 50% OF THE TOTAL REQUIRED (SECTION 1005.5)
6. ASSEMBLY OCCUPANCIES (SECTION 1029)

MAXIMUM CALCULATED OCCUPANT LOAD CAPACITY EACH EXIT DOOR CAN ACCOMMODATE BASED ON EGRESS WIDTH (1005.1)

1. 47" CLEAR WIDTH DIVIDED BY .2" = 235 OCCUPANTS CALCULATED OCCUPANCY PER EXIT = 8 PEOPLE CALCULATED OCCUPANCY DOES NOT EXCEED MAXIMUM CAPACITY OF EXIT.
2. 47" CLEAR WIDTH DIVIDED BY .2" = 235 OCCUPANTS CALCULATED OCCUPANCY PER EXIT = 8 PEOPLE CALCULATED OCCUPANCY DOES NOT EXCEED MAXIMUM CAPACITY OF EXIT.
3. 47" CLEAR WIDTH DIVIDED BY .2" = 235 OCCUPANTS CALCULATED OCCUPANCY PER EXIT = 8 PERSON CALCULATED OCCUPANCY DOES NOT EXCEED MAXIMUM CAPACITY OF EXIT.
4. 47" CLEAR WIDTH DIVIDED BY .2" = 235 OCCUPANTS CALCULATED OCCUPANCY PER EXIT = 8 PEOPLE CALCULATED OCCUPANCY DOES NOT EXCEED MAXIMUM CAPACITY OF EXIT.
5. 47" CLEAR WIDTH DIVIDED BY .2" = 235 OCCUPANTS CALCULATED OCCUPANCY PER EXIT = 8 PEOPLE CALCULATED OCCUPANCY DOES NOT EXCEED MAXIMUM CAPACITY OF EXIT.
6. 47" CLEAR WIDTH DIVIDED BY .2" = 235 OCCUPANTS CALCULATED OCCUPANCY PER EXIT = 8 PEOPLE CALCULATED OCCUPANCY DOES NOT EXCEED MAXIMUM CAPACITY OF EXIT.

VERIFY DUCTWORK DOES NOT BLOCK EXIT SIGN VISIBILITY.

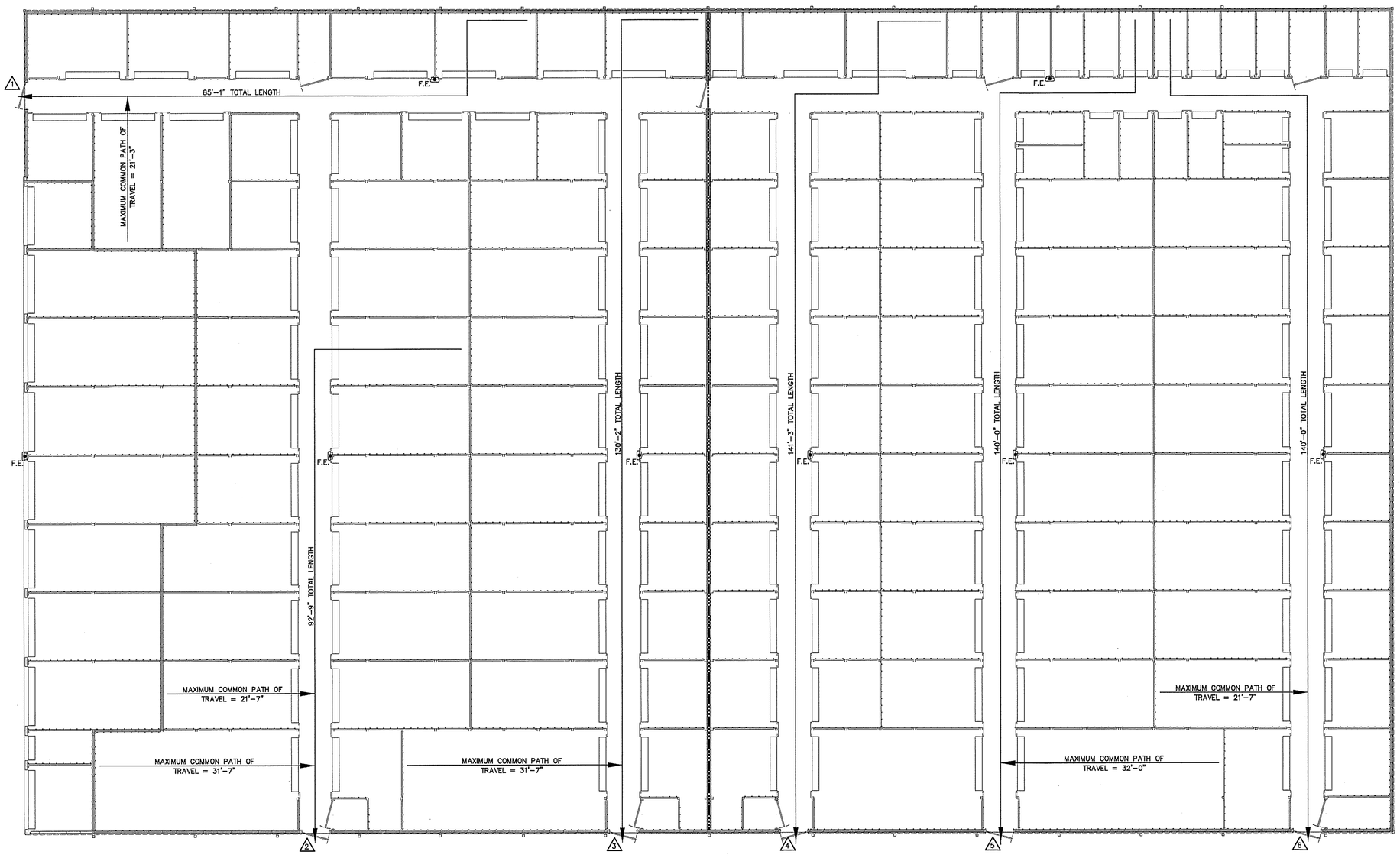

LEGEND

3 HOUR RATED WALL U419

NOTE:
AREA/ROOM/SPACE DESIGNATIONS USED ON LIFE SAFETY PLANS ARE EXCLUSIVE TO LIFE SAFETY PLAN ONLY, AND ARE NOT INDICATIVE OF ANY ACTUAL SPACE DESIGNATIONS USED ELSEWHERE.

LEGEND

F.E. FIRE EXTINGUISHER CLASS ABC 10 POUNDS

LIFE SAFETY PLAN BUILDING "H"

SCALE: 1/8" = 1'–0"

NORTH CAROLINA PROFESSIONAL SEAL 18909 ENGINEER BARRY L. CRUSE
02–13–26

PLANS FOR:
AMPLE STORAGE
BUILDING "H"
ERWIN, NORTH CAROLINA 28339

REVISIONS

NO.	

Cruse And Associates, P.A.
414 EAST EDGERTON STREET
Dunn, North Carolina 28334
PH. (910) 892-4169
FAX. (910) 892-5162
LICENSE NO.: C-1721

THESE DOCUMENTS ARE INSTRUMENTS OF SERVICE AND AS SUCH THESE DRAWINGS, DESIGNS, AND DESIGN CONCEPTS PRESENTED REMAIN THE PROPERTY OF THE ENGINEER. PUBLISH OR DUPLICATE THE DRAWINGS OR DESIGNS ONLY WITH THE WRITTEN PERMISSION OF THE ENGINEER.
© COPY RIGHT

DATE 02/13/26
DRAWN BY BAM
JOB NO. 26–02

SHEET NO.
LS-1 OF 1

CONNECTION SCHEDULE

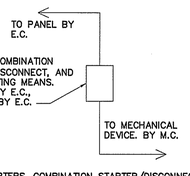

ALL STARTERS, COMBINATION STARTER/DISCONNECTS, AND DISCONNECTING MEANS, SUPPLIED BY E.C. FOR MECHANICAL EQUIPMENT AS REQUIRED BY NEC AND MECHANICAL EQUIPMENT MANUFACTURER'S REQUIREMENTS.

GENERAL NOTES:

1. RUN ALL DUCTWORK TIGHT TO CEILING INSULATION.
2. FASTEN ALL CONDENSATE LINES TO WALLS OR CEILINGS WHERE APPLICABLE.
3. 7-DAY PROGRAMMABLE T'STAT WITH LOCKING COVER.
4. PROVIDE & INSTALL PROTECTIVE 6" CONCRETE-FILLED PIPE BOLLARDS, TWO PER HEAT PUMP OR AS SHOWN ON PLAN.
5. PROVIDE AND INSTALL CONCRETE SPLASH BLOCK, ONE PER 3 HEAT PUMPS MIN.
6. INSTALL FLOAT SWITCH IN AUXILIARY PAN TO STOP UNIT IN EVENT OF CONDENSATE OVERFLOW.

MECHANICAL SYMBOL LEGEND

SINGLE LINE	DOUBLE LINE	DESCRIPTION
		TAKE OFF TO SUPPLY AIR REGISTER WITH EXT. INSUL. DUCTWORK
		BRANCH TAKEOFF FROM MAIN TRUNK DUCT WITH EXT. INSUL. DUCTWORK
		END CAP
D OR SD	D OR SD	DUCT SMOKE DETECTOR
A.D.		ACCESS DOOR — DOOR SIZE / DUCT HEIGHT: 8X8 / 10"; 10X10 / 12"; 12X12 / 14" & LARGER
		VOLUME CONTROL DAMPER (TYP); CEILING DIFFUSER; FLEXIBLE DUCTWORK (14' MAX.)
		ONE SIDED REDUCING TRANSITION
F.D.(1-1/2)		F.D.=FIRE DAMPER (1-1/2)=RATED FOR 1-1/2 HRS.
		RETURN AIR OR EXHAUST GRILLE
		TWO SIDED TRANSITION
(1-WAY) (2-WAY) (3-WAY) (4-WAY)		SUPPLY AIR CEILING DIFFUSER, ARROW INDICATES DIRECTION OF BLOW & ACTIVE DIFFUSER SIDES
CUSHION HEAD		(1)CUSHION HEAD @ BRANCH OR DIFFUSER RUNOUT (2)CUSHION HEAD IS EQUAL TO 1-1/2 WIDTH OF THE BRANCH DUCT OR DIFFUSER RUNOUT
		R.A. OR EXHAUST DUCT TURNS DOWN @ 90 DEGS.
		MANUAL VOLUME CONTROL DAMPER W/ QUADRANT LOCKING DEVICE
		TWO SIDED TRANSITION
		ELECT. DUCT INSERT HEATER WITH CONTROL PANEL
		AHU W/FLEXIBLE CONNECTION AT SUPPLY AND RETURN DUCT
		KEY NOTE
XXX		MARK; CFM-DIFFUSER, REGISTER OR GRILLE (SEE SCHEDULE)
		EXHAUST FAN

KEY NOTES:

1. 16" X 16" TRANSFER GRILL INSTALLED IN DOOR (TYPICAL)
2. 1-1/2" CONDENSATE LINE FROM EACH AHU TO SPLASH BLOCK. ONE 1-1/2" CONDENSATE LINE & ONE SPLASH BLOCK PER AHU (TYP.)

NOTE:
HVAC CONTRACTOR TO VERIFY EXACT LOCATION (THAT CORRESPONDS TO APPROVED SITE PLAN) OF HEAT PUMPS WITH GENERAL CONTRACTOR BEFORE BEGINNING CONSTRUCTION. THEN COORDINATE LOCATION WITH ELECTRICAL CONTRACTOR FOR ALL ELECTRICAL REQUIREMENTS.

NOTE:
VERIFY THERMOSTAT LOCATION WITH OWNER PRIOR TO INSTALLING.

GENERAL NOTE:
MAINTAIN MANUFACTURER'S REQUIRED CLEARANCES FOR ALL HVAC EQUIPMENT.

VERIFY DUCTWORK DOES NOT BLOCK EXIT SIGN VISIBILITY.

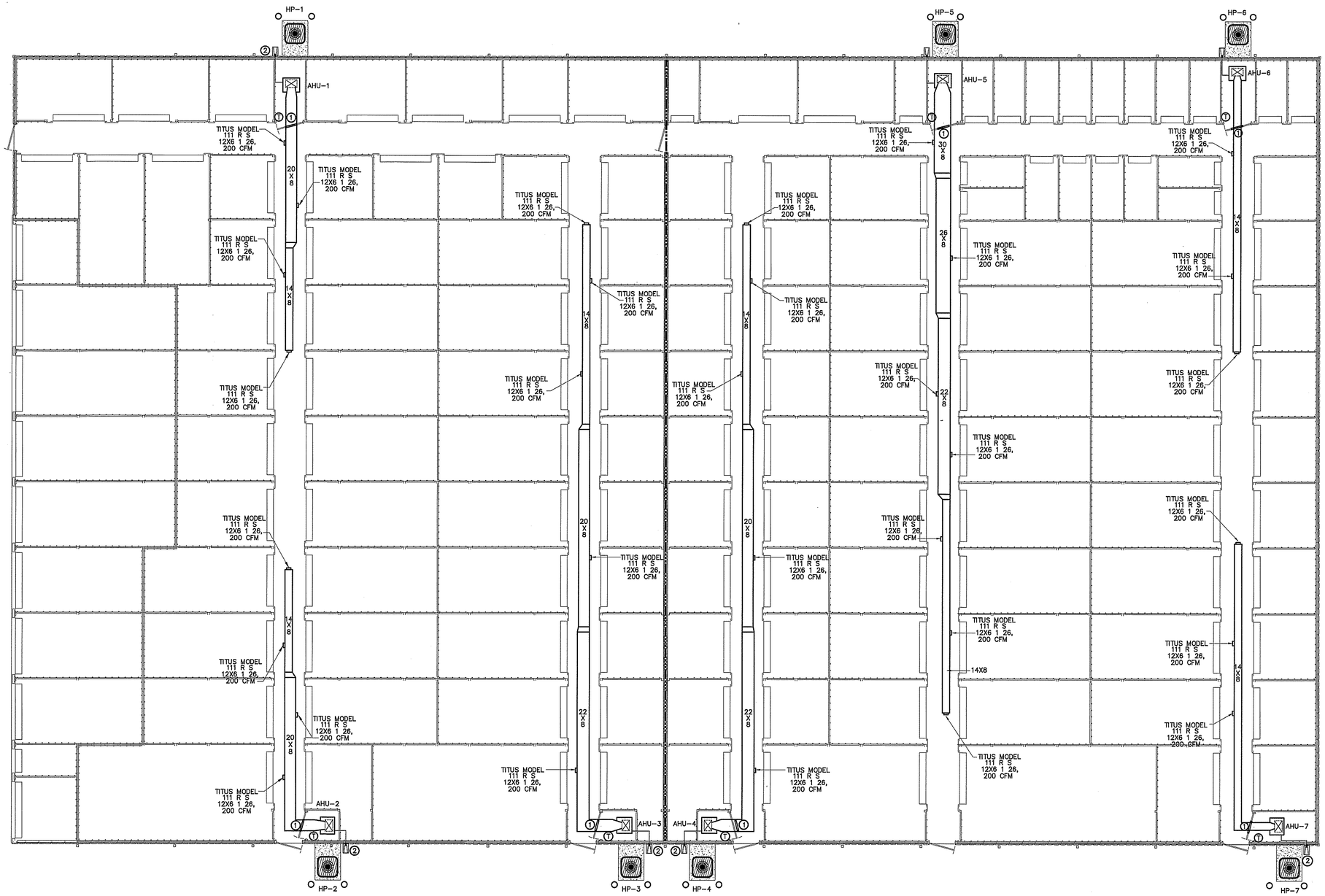

LEGEND
3 HOUR RATED WALL U419

MECHANICAL HVAC PLAN BUILDING "H"

SCALE: 1/8" = 1'-0"

NORTH CAROLINA PROFESSIONAL SEAL 18909 ENGINEER RANDY L. CRUSE 02-13-26

PLANS FOR:
AMPLE STORAGE BUILDING "H"
ERWIN, NORTH CAROLINA 28339

REVISIONS
NO.

Cruse And Associates, P.A.
414 EAST EDGERTON STREET
Benson, North Carolina 27504
PH: (919) 892-4429
FAX: (919) 892-4160
LICENSE NO.: C-1721

THESE DOCUMENTS ARE INSTRUMENTS OF SERVICE AND AS SUCH THESE DRAWINGS, DESIGNS, AND DESIGN CONCEPTS PRESENTED REMAIN THE PROPERTY OF THE ENGINEER. PUBLISH OR DUPLICATE THE DRAWINGS OR DESIGNS ONLY WITH THE WRITTEN PERMISSION OF THE ENGINEER.
© COPY RIGHT

DATE 02/13/26
DRAWN BY BAM
JOB NO. 26-02

SHEET NO.
M-1 OF 2

AIR HANDLER UNIT

AHU NO.	MANUFACTURER	MODEL	VOLTAGE	E.S.P.		CFM	UNIT FLA	REF LINES GAS	REF LINES LIQ.	SEER	HTR KW (240)	COOLING CAPACITY (MBH) TOTAL	COOLING CAPACITY (MBH) SENS.	HEATING CAPACITY (MBH) HIGH	HEATING CAPACITY (MBH) LOW	HSPF	MIN. CIRC. AMPACITY	M.O.C.P.
AHU-6,7	TRANE	TEM4A0B24S21	240/1/60	.46	N/A	600	16.0	3/4	3/8	14.5	3.80	18.6	13.4	17.2	11.1	8.6	24	25
AHU-1,2	TRANE	TEM4A0B24S21	240/1/60	.46	N/A	800	16.0	3/4	3/8	15.0	3.80	23.8	17.9	23.0	15.0	8.5	24	25
AHU-3,4	TRANE	TEM4A0B31M31	240/1/60	.46	N/A	1000	16.0	3/4	3/8	14.3	3.80	28.4	22.4	27.2	18.5	8.5	24	25
AHU-5	TRANE	TEM4A0C49M41	240/1/60	.46	N/A	1400	16.0	7/8	3/8	15.5	3.80	42.0	31.8	38.7	25.1	9.0	28	30

** PROVIDE OUTDOOR THERMOSTAT TO LOCK OUT SUPPLEMENTAL ELECTRIC HEAT AT OUTDOOR TEMPERATURES ABOVE 40°F.
NOTE: SEE SHEET M-4 OF 5 FOR AHU-18 & HP-18.

SPLIT SYSTEM HEAT PUMP UNITS

MARK	MANUF.	MODEL	VOLTAGE	# COMP.	MIN. CIRC. AMPACITY	M.O.C.P.	UNIT FLA.	ACCESSORIES
HP-6,7	TRANE	4TWR5018N1000A	240/1/60	1	15	25	12.3	EXCLUDE 8,18
HP-1,2	TRANE	4TWR5024N1000A	240/1/60	1	15	25	12.3	EXCLUDE 8,18
HP-3,4	TRANE	4TWR5030N1000A	240/1/60	1	17	25	13.6	EXCLUDE 8,18
HP-5	TRANE	4TWR5042N1000A	240/1/60	1	24	40	17.7	EXCLUDE 8,18

ACCESSORIES

1 TIME-DELAY RELAY
2 CYCLE PROTECTOR
3 EVAPORATOR FREEZE PROTECTOR
4 ISOLATION RELAY
5 TXV
6 HIGH PRESSURE SWITCH
7 LIQUID SOLENOID VALVE
8 LOW-AMBIENT CONTROLLER
9 FILTER DRIER (LIQUID LINE)
10 OUTDOOR T'STAT TO LOCK OUT AUX. HT. (SET @ 40° F ADJ)
11 LOW PRESSURE CONTROL
12 CRANKCASE HEATER
13 DISCHARGE LINE MUFFLER
14 SUCTION AND LIQUID LINE SHUT OFF VALVES
15 THERMOSTAT (SEE NOTE)
16 SUPPORT FEET
17 COIL GUARDS
18 HUMIDISTAT

COOLING CAPACITY @ 80 DEG. F DB/67 DEG WB AIR ENTERING INDOOR UNIT & 95 DEG. F DB AIR ENTERING OUTDOOR UNIT
HEATING CAPACITY: HIGH TEMP = 70 DEG F DB INDOOR EAT & 47 DEG F DB/43 DEG F WB AIR ENTERING OUTDOOR UNIT
LOW TEMP = 70 DEG F DB INDOOR EAT & 17 DEG F DB/15 DEG F WB ENTERING OUTDOOR UNIT

T-STAT: THE NUMBER OF STAGES OF HEATING/COOLING SHALL MATCH THE NUMBER OF STAGES OF HEAT AVAILABLE IN THE HPIU OR THE NUMBER OF STAGES OF COOLING AVAILABLE IN THE HPOU. PROVIDE WITH T-STAT; 7 DAY PROGRAMMABLE, DIGITAL.

CONNECTION SCHEDULE

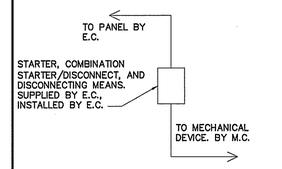

ALL STARTERS, COMBINATION STARTER/DISCONNECTS, AND DISCONNECTING MEANS, SUPPLIED BY E.C. FOR MECHANICAL EQUIPMENT AS REQUIRED BY NEC AND MECHANICAL EQUIPMENT MANUFACTURER'S REQUIREMENTS.

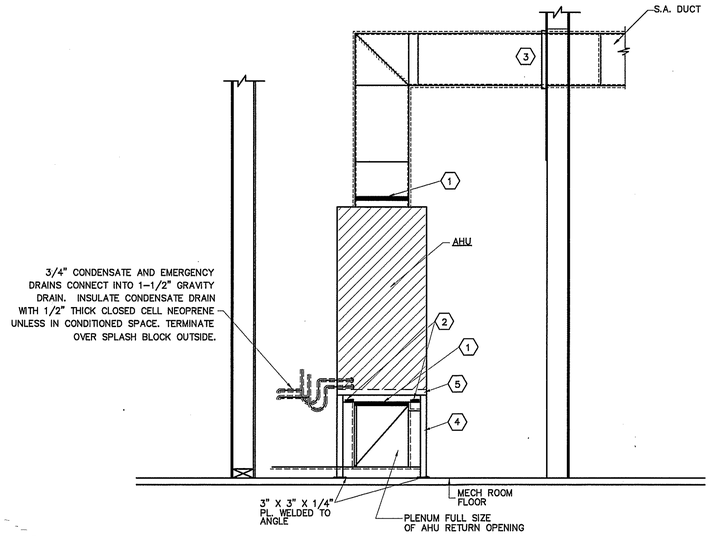

TYPICAL DETAIL AT FLOOR MOUNTED AHU

NOT TO SCALE

NOTES:

1. FLEXIBLE CONNECTION
2. NEOPRENE-IN-SHEAR VIBRATION ISOLATORS
3. SHEET METAL COLLAR AT WALL PENETRATION
4. 1-1/2" X 1-1/2" X 3/16" ANGLE HPIU SUPPORT STAND WITH ALL WELDED CONSTRUCTION. PAINT WITH 1 COAT OF PRIMER AND FINISH WITH (2) COATS GRAY HIGH GLOSS MACHINE ENAMEL, MARTIN SENOUR OR EQUAL.
5. 1" PLEATED FILTER

PROVIDE PROGRAMMABLE THERMOSTAT FOR EACH SYSTEM.

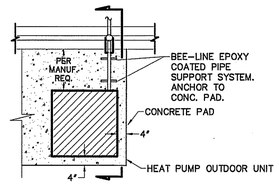

PLAN VIEW
NOT TO SCALE

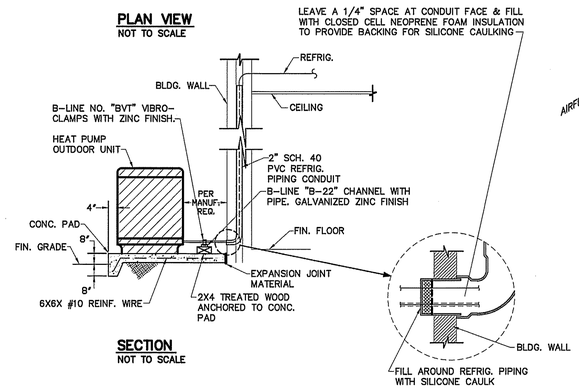

SECTION
NOT TO SCALE

DETAIL-TYPICAL HEAT PUMP OUTDOOR UNIT

NOT TO SCALE

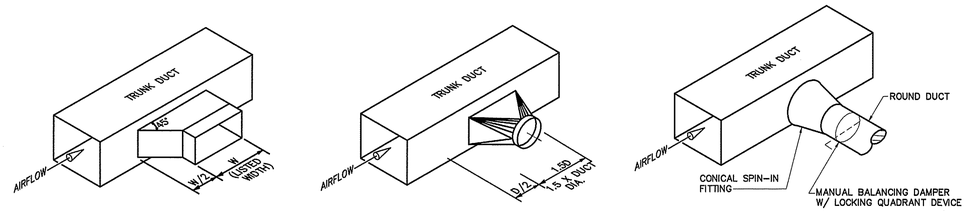

RECTANGULAR ROUND DIFFUSER

TYPICAL LATERAL TO REGISTER OR BRANCH DUCT

NOT TO SCALE

MECHANICAL NOTES (GENERAL)

1. DUCTWORK LAYOUTS ARE SCHEMATIC. ALL RISES, DROPS, OFFSETS, AND TRANSITIONS REQUIRED BUT ARE NOT SHOWN SHALL BE PROVIDED AND INSTALLED BY THE CONTRACTOR AT NO ADDITIONAL EXPENSE TO THE OWNER.
2. DUCTWORK SHALL BE GALVANIZED STEEL AND SHALL BE CONSTRUCTED IN COMPLIANCE WITH SMACNA STANDARDS FOR LOW VELOCITY DUCTWORK. DUCT SIZES SHOWN ARE INSIDE CLEAR DIMENSIONS. FLEXIBLE RUNOUTS SHALL NOT EXCEED 15' AND SHALL NOT BE USED TO FORM ELBOWS. CONNECTIONS FROM RECTANGULAR TO ROUND DUCT SHALL BE MADE WITH MANUFACTURED 45 DEG. LATERAL TAPS.
3. ALL DUCTWORK SHALL BE SEALED AIR TIGHT WITH SEALING COMPOUND.
4. ALL ELBOWS IN DUCTWORK SHALL BE RADIUS ELBOWS, UNLESS NOTED OTHERWISE. WHERE SQUARE ELBOWS ARE SHOWN, INSTALL TURNING VANES. DUCT SIZES SHOWN ARE NET INTERIOR DIMENSIONS.
5. THIS CONTRACTOR SHALL COORDINATE HIS WORK WITH THAT OF OTHER TRADES PRIOR TO INSTALLATION OF ANY OF HIS PIPING, DUCTWORK, OR EQUIPMENT.
6. THE MECHANICAL CONTRACTOR SHALL MAKE A COMPLETE REVIEW OF THE MECHANICAL PLANS, SCHEDULES, AND DETAILS PRIOR TO INSTALLATION OF THE MECHANICAL SYSTEMS AND REVIEW ANY CONFLICTS THAT ARE NOTED WITH THE ENGINEER.
7. IT WILL BE THE RESPONSIBILITY OF THE MECHANICAL CONTRACTOR TO ENSURE THAT ITEMS TO BE FURNISHED UNDER HIS CONTRACT WILL FIT THE SPACE AVAILABLE. HE SHALL MAKE NECESSARY FIELD MEASUREMENTS TO ASCERTAIN SPACE REQUIREMENTS, INCLUDING THOSE FOR CONNECTIONS AND SHALL FURNISH AND INSTALL SUCH SIZES AND SHAPES OF EQUIPMENT THAT ARE THE TRUE AND INTENT MEANING OF THE PLANS AND SPECIFICATIONS. HE SHALL PROVIDE THE ENGINEER SCALED DRAWINGS OF ALL MECHANICAL DRAWINGS.
8. ALL EQUIPMENT SHALL BE LOCATED AND INSTALLED TO PROVIDE MAXIMUM SPACE FOR MAINTENANCE AND SERVICE.
9. PROVIDE FACTORY OR FIELD INSTALLED DRAIN PANS UNDER ALL COOLING COIL UNITS. INSTALL DRAIN PAN FLOAT TO SHUT DOWN UNIT FAN IN EVENT THAT CONDENSATE BEGINS TO FILL EMERGENCY DRAIN PAN. RUN ALL CONDENSATE DRAIN LINES TO APPROPRIATE DRAIN.

BUILDING "H"
MECHANICAL SYSTEMS, SERVICE SYSTEMS AND EQUIPMENT
THERMAL ZONE 4A - HARNETT COUNTY, NC

WINTER DRY BULB 16 DEG. F.

SUMMER DRY BULB 93 DEG. F.

INTERIOR DESIGN CONDITIONS

WINTER DRY BULB 59 DEG. F.

SUMMER DRY BULB 80 DEG. F.

RELATIVE HUMIDITY 55%

BUILDING HEATING LOAD 120.0 MBH

BUILDING COOLING LOAD 15.5 TONS

MECHANICAL SPACE CONDITIONING SYSTEM

UNITARY
DESCRIPTION OF UNIT - HEAT PUMP
HEATING EFFICIENCY - 8.5 HSPF
COOLING EFFICIENCY - 14.3 SEER
SIZE CATEGORY OF UNIT - ≤ 65,000 BTUH

BOILER
SIZE CATEGORY. IF OVERSIZED, STATE REASON: N/A

CHILLER
SIZE CATEGORY. IF OVERSIZED, STATE REASON: N/A

LIST EQUIPMENT EFFICIENCIES SEE SCHEDULE

NORTH CAROLINA PROFESSIONAL SEAL 18909 ENGINEER RANDY L. CRUSE
02-13-26

PLANS FOR:
AMPLE STORAGE BUILDING "H"
ERWIN, NORTH CAROLINA 28339

REVISIONS

NO.	

Cruse And Associates, P.A.
414 EAST EDGERTON STREET
Dunn, North Carolina 28334
(910) 892-8192
FAX: (910) 892-5182
LICENSE NO.: C-1721

THESE DOCUMENTS ARE INSTRUMENTS OF SERVICE AND AS SUCH THESE DRAWINGS, DESIGNS, AND DESIGN CONCEPTS PRESENTED REMAIN THE PROPERTY OF THE ENGINEER. PUBLISH OR DUPLICATE THE DRAWINGS OR DESIGNS ONLY WITH THE WRITTEN PERMISSION OF THE ENGINEER.
© COPY RIGHT

DATE 02/13/26
DRAWN BY BAM
JOB NO. 26-02

SHEET NO.
M-2 OF 2

ELECTRICAL LEGEND

MARK	DESCRIPTION
	QUAD RECEPTACLE
	DUPLEX RECEPTACLE
T	SINGLE POLE SWITCH OR TIMER AS APPLICABLE
	HIGH WALL MOUNTED DUPLEX RECEPTACLE APROXIMATELY 12" BELOW CEILING
	FLUORESCENT FIXTURE
	SWITCHED BRANCH CIRCUIT
	UNSWITCHED BRANCH CIRCUIT
	120/208 VOLT CIRCUIT
$M	MOTION DETECTING SINGLE-POLE SWITCH ON TIMER
⊗	'EXIT' LIGHT FIXTURE, TYPE 'EX'
	BATTERY OPERATED EMERG. LT. (2-HEAD, WALL MTD.)
$3(4)	MOTION DETECTING 3-WAY SWITCH (4-WAY SWITCH) WITH TIMER
	FUSED DISCONNECT SWITCH
	CEILING MOUNTED FUSED DISCONNECT SWITCH
	TELEPHONE
J	JUNCTION BOX
T	SINGLE POLE SWITCH OR TIMER AS APPLICABLE
N/L	UNSWITCHED FIXTURE
$O	OCCUPANCY SENSING SINGLE-POLE SWITCH NOT ON TIMER
	280V RECEPTACLE
	EMERGENCY LIGHT REMOTE WEATHERHEAD(S)

VERIFY DUCTWORK DOES NOT BLOCK EXIT SIGN VISIBILITY.

NOTE:

1. VERIFY LOCATION OF LIGHTS & RECEPTACLES WITH OWNER BEFORE CONSTRUCTION.
2. COORDINATE LOCATION OF 8' STRIP LIGHTS IN CORRIDOR WITH DUCT WORK WHERE APPLICABLE.
3. ALL FLUORESCENT LIGHTS IN CORRIDORS TO BE MOUNTED ON THE WALLS WHERE APPLICABLE.
4. ALL HALLWAYS SWITCHES TO BE ON MOTION SENSORS OR SWITCHED AS INDICATED AND ON TIMERS OF 30 MINUTES. ALL UNIT SWITCHES & UNIT RECEPTACLES TO BE ON TIMER OF 30 MINUTES WITH NO HOLD MECHANISMS.
5. RECEPTACLES IN EACH UNIT ARE TO BE SWITCHED. TIE TO SWITCH/TIMER IN EACH UNIT.
6. VERIFY NIGHT LIGHTS AND PERMANENT BURN FIXTURES WITH OWNER BEFORE WIRING.

GENERAL NOTE:

1. VERIFY LOCATION OF WALL PACKS WITH OWNER & SITE LIGHTING PLAN BEFORE INSTALLATION.

LIGHTING DATA FOR N.C. ENERGY CODE BUILDING "H"

AREA USE	AREA FT^2	WATTS PER FT^2 ALLOWED	TOTAL WATTS ALLOWED	TOTAL WATTS USED	TOTAL WATTS LEFT OVER
STORAGE	24,000	1.2	28,800	8,798	20,002
TOTAL	24,000		28,800	8,798	20,002

LIGHT FIXTURE SCHEDULE

MARK	DESCRIPTION	MANUFACTURER	CATALOG NUMBER	LAMPS	BALLASTS	WATTAGE	REMARKS
A	8' LED STRIP W/WIRE GUARD	DAYBRITE	CLX L96 10000LM SEF WD MVOLT 40K 80 CRI WH	LED		71.0	WITH (2) 48" WIRE GUARDS
B	OUTDOOR LED WALL LIGHT	LSI	TWR1 LED 3 50K MVOLT	LED	LED	58.4	VERIFY MOUNTING HEIGHT, OPTIONS BEFORE INSTALLATION
C	KEYLESS FIXTURE WITH WIREGUARD AND LED BULB	–	–	LED A19	–	13	WITH WIRE GUARD
EM	EMERGENCY LIGHT WITH BATTERY BACKUP	MCPHILBEN	CAXR6L24W6				
EX	LED TYPE EXIT LIGHT WITH BATTERY BACKUP	MCPHILBEN	CXXL3RW				
EM2	EMERGENCY LIGHT REMOTE WEATHERHEAD(S)	MCPHILBEN	CR2CSWA				

1. ALL FIXTURE SELECTIONS TO BE VERIFIED BY OWNER BEFORE PURCHASE. *
2. SIGN LETTERING TO BE ON TIMECLOCK OR PHOTOCELL
3. LED WALLPACKS ON PHOTOCELL.

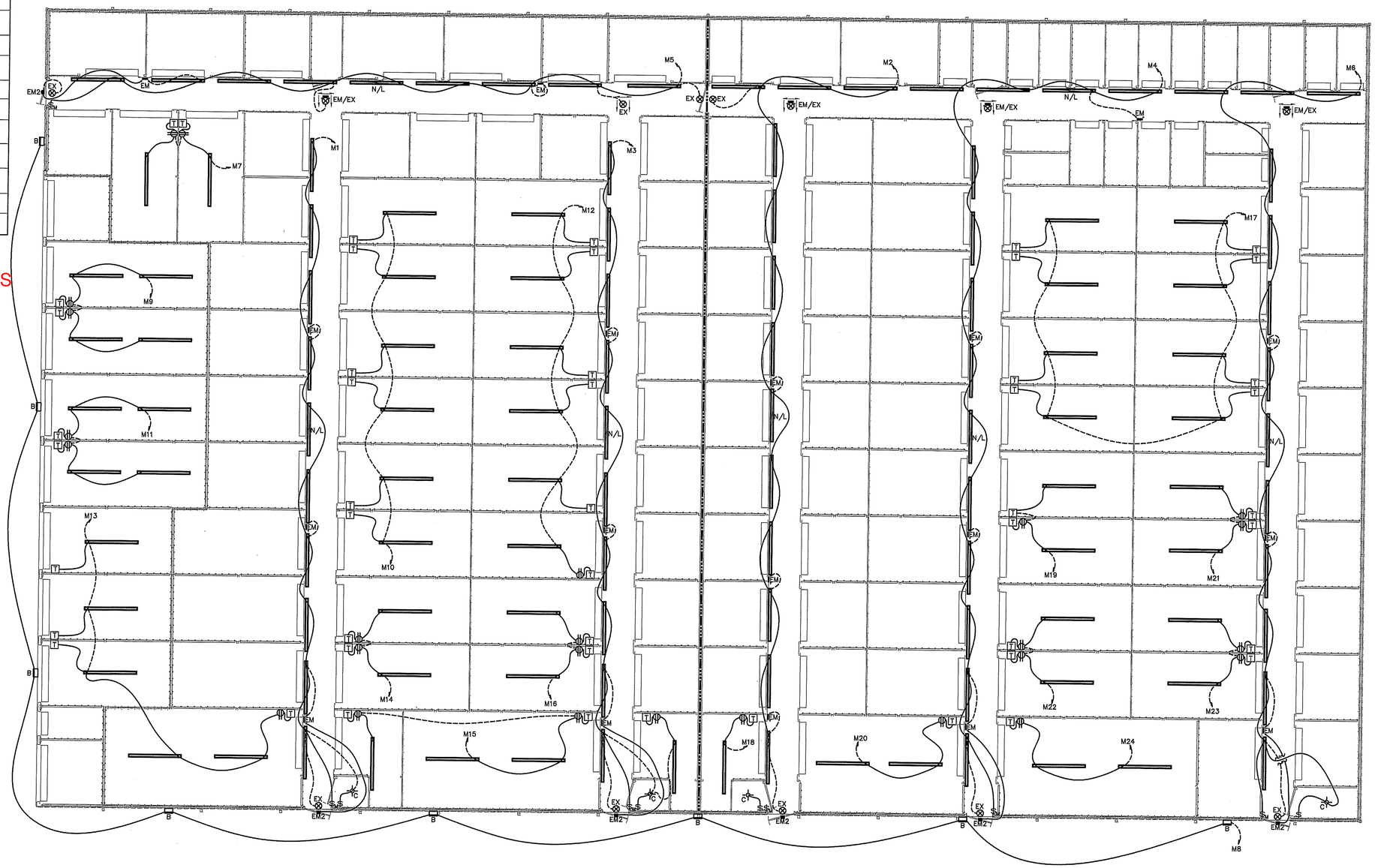

ELECTRICAL LIGHTING PLAN BUILDING "H"

SCALE: 1/8" = 1'-0"

LEGEND

3 HOUR RATED WALL U419

NORTH CAROLINA PROFESSIONAL SEAL 18909 ENGINEER ANDY L. CRUSE 02-13-26

PLANS FOR:
AMPLE STORAGE
BUILDING "H"
ERWIN, NORTH CAROLINA 28339

REVISIONS

NO.	

Cruse And Associates, P.A.
414 EAST EDGERTON STREET
Dunn, North Carolina 28334
PH: (910) 892-4179
FAX: (910) 892-5182
LICENSE NO.: C-1721

THESE DOCUMENTS ARE INSTRUMENTS OF SERVICE AND AS SUCH THESE DRAWINGS, DESIGNS, AND DESIGN CONCEPTS PRESENTED REMAIN THE PROPERTY OF THE ENGINEER. PUBLISH OR DUPLICATE THE DRAWINGS OR DESIGNS ONLY WITH THE WRITTEN PERMISSION OF THE ENGINEER.
© COPY RIGHT

DATE 02/13/26
DRAWN BY BAM
JOB NO. 26-02

SHEET NO.
E-1 OF 3

ELECTRICAL LEGEND

MARK	DESCRIPTION
	QUAD RECEPTACLE
	DUPLEX RECEPTACLE
T	SINGLE POLE SWITCH OR TIMER AS APPLICABLE
	HIGH WALL MOUNTED DUPLEX RECEPTACLE APROXIMATELY 12" BELOW CEILING
	FLUORESCENT FIXTURE
	SWITCHED BRANCH CIRCUIT
	UNSWITCHED BRANCH CIRCUIT
	120/208 VOLT CIRCUIT
$M	MOTION DETECTING SINGLE-POLE SWITCH ON TIMER
	'EXIT' LIGHT FIXTURE, TYPE 'EX'
	BATTERY OPERATED EMERG. LT. (2-HEAD, WALL MTD.)
$3(4)	MOTION DETECTING 3-WAY SWITCH (4-WAY SWITCH) WITH TIMER
	FUSED DISCONNECT SWITCH
	CEILING MOUNTED FUSED DISCONNECT SWITCH
	TELEPHONE
J	JUNCTION BOX
T	SINGLE POLE SWITCH OR TIMER AS APPLICABLE
N/L	UNSWITCHED FIXTURE
$O	OCCUPANCY SENSING SINGLE-POLE SWITCH NOT ON TIMER
	280V RECEPTACLE
	EMERGENCY LIGHT REMOTE WEATHERHEAD(S)

NOTE:

1. VERIFY LOCATION OF LIGHTS & RECEPTACLES WITH OWNER BEFORE CONSTRUCTION.
2. COORDINATE LOCATION OF 8' STRIP LIGHTS IN CORRIDOR WITH DUCT WORK WHERE APPLICABLE.
3. ALL FLUORESCENT LIGHTS IN CORRIDORS TO BE MOUNTED ON THE WALLS WHERE APPLICABLE.
4. ALL HALLWAYS SWITCHES TO BE ON MOTION SENSORS OR SWITCHED AS INDICATED AND ON TIMERS OF 30 MINUTES. ALL UNIT SWITCHES & UNIT RECEPTACLES TO BE ON TIMER OF 30 MINUTES WITH NO HOLD MECHANISMS.
5. RECEPTACLES IN EACH UNIT ARE TO BE SWITCHED. TIE TO SWITCH/TIMER IN EACH UNIT.
6. VERIFY NIGHT LIGHTS AND PERMANENT BURN FIXTURES WITH OWNER BEFORE WIRING.

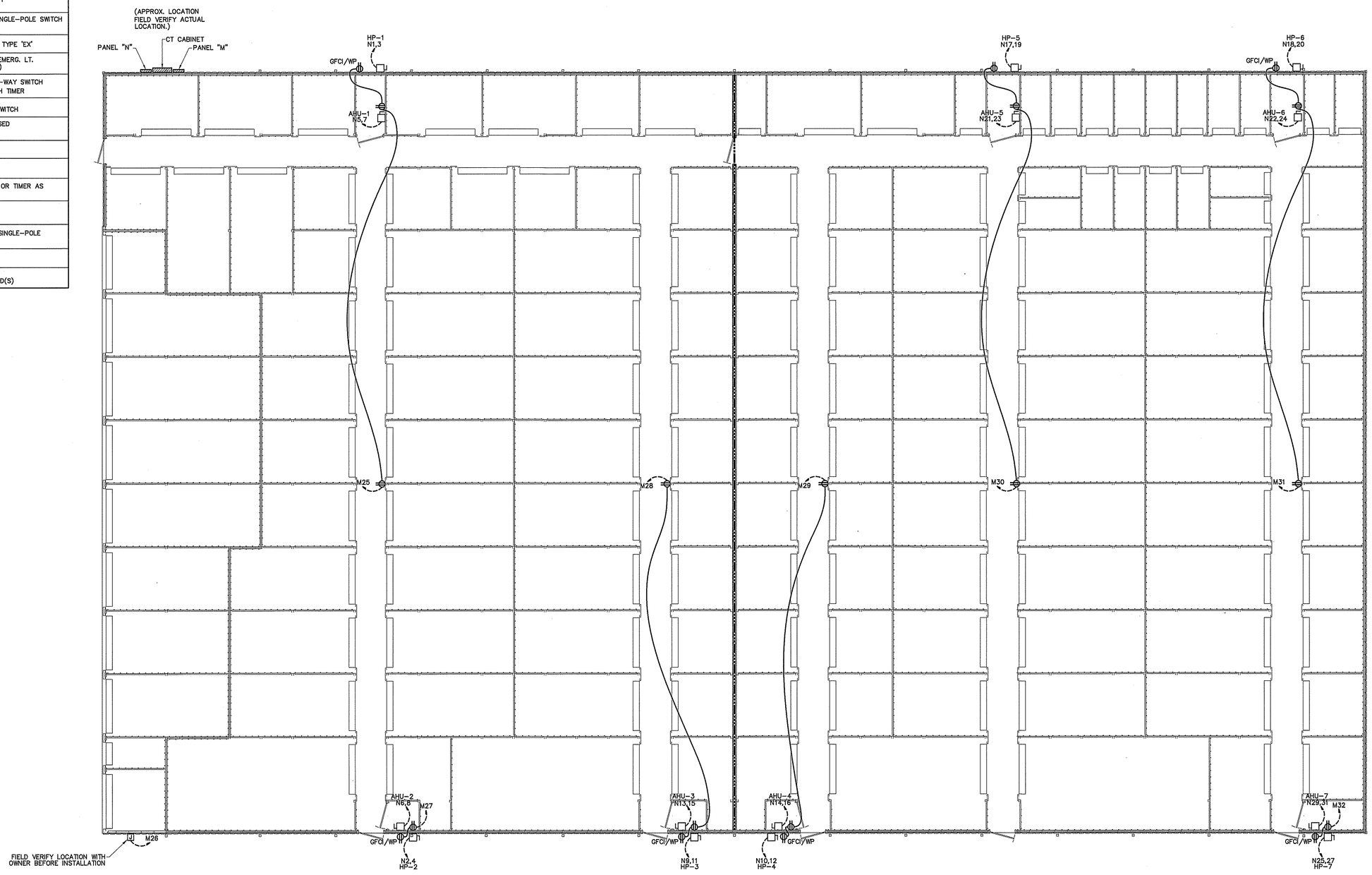

ELECTRICAL POWER PLAN BUILDING "H"

SCALE: 1/8" = 1'-0"

LEGEND

3 HOUR RATED WALL U419

NORTH CAROLINA PROFESSIONAL SEAL 18909 ENGINEER RANDY L. CRUSE 02-13-26

PLANS FOR:
AMPLE STORAGE
BUILDING "H"
ERWIN, NORTH CAROLINA 28339

REVISIONS	
NO.	

Cruse And Associates, P.A.
414 EAST EDGERTON STREET
Dist. No. 13 Cumberland County
PH: (910) 868-4429
FAX: (910) 868-4140
LICENSE NO.: C-1721

THESE DOCUMENTS ARE INSTRUMENTS OF SERVICE AND AS SUCH THESE DRAWINGS, DESIGNS, AND DESIGN CONCEPTS PRESENTED REMAIN THE PROPERTY OF THE ENGINEER. PUBLISH OR DUPLICATE THE DRAWINGS OR DESIGNS ONLY WITH THE WRITTEN PERMISSION OF THE ENGINEER.
© COPY RIGHT

DATE	02/13/26
DRAWN BY	BAM
JOB NO.	26-02

SHEET NO.
E-2 OF 3

NOTE:
NEMA 3R PANELS ARE LOCATED ON THE EXTERIOR OF THE BUILDING.

NOTE:
VERIFY AIC RATING WITH UTILITY COMPANY BEFORE ORDERING PANELS.

BUILDING "H"

PANEL: M SCHEDULE: ___ MANUFACTURER: SQ. D NO. OF SPACES 42
VOLTS: 120/240 AMPS: 200 TYPE: "NQOD" MOUNTING: SURFACE
ENCLOSURE: NEMA 3R Ø: 1 SHORT CIRCUIT RATING: 22K
MAIN ☒ MLO ☐ TOP FEED ☒ BOTTOM FEED ☐ COPPER BUS ☒ GROUND BAR KIT ☒ NEUTRAL BAR KIT ☒

L1	L2	CIRCUIT	POLES	TRIP	ASSIGNMENT	PHASE L1	PHASE L2	ASSIGNMENT	TRIP	POLES	CIRCUIT	L1	L2
6.0		1	1	20	CORRIDOR #1 LIGHTS	o		CORRIDOR #3 LIGHTS	20	1	2	7.8	
	8.1	3	1	20	CORRIDOR #2 LIGHTS		o	CORRIDOR #4 LIGHTS	20	1	4		9.9
5.3		5	1	20	LEFT REAR CORRIDOR LIGHTS	o		CORRIDOR #5 LIGHTS	20	1	6	7.8	
	4.2	7	1	20	LEFT REAR 10X20 LTS./RECS.		o	WALLPACKS	20	1	8		3.9
5.4		9	1	20	LEFT REAR 10X25 LTS./RECS.	o		LEFT CENTER 10X20 LIGHTS	20	1	10	3.6	
	5.4	11	1	20	LEFT CEN. 10X25 LTS./RECS.		o	CENTER 10X20 LIGHTS & REC.	20	1	12		5.1
4.5		13	1	20	LEFT 30X15/10X15 LTS./RECS.	o		LEFT CENTER 10X20 LTS./RECS.	20	1	14	4.2	
	4.8	15	1	20	CEN. 10X15/30X15 LTS./RECS.		o	CENTER 10X20 LIGHTS & RECS.	20	1	16		4.2
4.7		17	1	20	RIGHT SIDE 10X20 UNIT LIGHTS	o		RT. CEN. 10X15 LIGHT & REC.	20	1	18	2.1	
	2.7	19	1	20	RT. SIDE 10X20 UNIT LTS./REC.		o	RT. CEN. 15X25 LIGHTS & REC.	20	1	20		2.7
4.2		21	1	20	RT. SIDE 10X20 UNIT LTS/RECS.	o		RT. SIDE 10X20 UNIT LTS/RECS.	20	1	22	4.2	
	4.2	23	1	20	RT. SIDE 10X20 UNIT LTS/RECS.		o	RT. SIDE 15X30 UNIT LTS./REC.	20	1	24		2.7
4.5		25	1	20	HVAC/CORR. UNIT #1 RECEPTS.	o		BUILDING SIGN	20	1	26	5.0	
	3.0	27	1	20	HVAC/CORR. UNIT #2 RECEPTS.		o	HVAC/CORR. UNIT #3 RECEPTS.	20	1	28		4.5
4.5		29	1	20	HVAC/CORR. UNIT #4 RECEPTS.	o		HVAC/CORR. UNIT #5 RECEPTS.	20	1	30	4.5	
	4.5	31	1	20	HVAC/CORR. UNIT #6 RECEPTS.		o	HVAC/CORR. UNIT #7 RECEPTS.	20	1	32		3.0
X		33	1	20	SPARE	o		SPARE	20	1	34	X	
	X	35	1	20	SPARE		o	SPARE	20	1	36		X
X		37	1	20	SPARE	o		SPARE	20	1	38	X	
	X	39	1	20	SPARE		o	SPARE	20	1	40		X
X		41	1	20	SPARE	o		SPARE	20	1	42	X	

L1 = 78.3 A
L2 = 72.9 A

BUILDING "H"

PANEL: N SCHEDULE: ___ MANUFACTURER: SQ. D NO. OF SPACES 42
VOLTS: 120/240 AMPS: 400 TYPE: "NQOD" MOUNTING: SURFACE
ENCLOSURE: NEMA 3R Ø: 1 SHORT CIRCUIT RATING: 22K
MAIN ☒ MLO ☐ TOP FEED ☒ BOTTOM FEED ☐ COPPER BUS ☒ GROUND BAR KIT ☒ NEUTRAL BAR KIT ☒

L1	L2	CIRCUIT	POLES	TRIP	ASSIGNMENT	PHASE L1	PHASE L2	ASSIGNMENT	TRIP	POLES	CIRCUIT	L1	L2
12.3		1	2	25	HEAT PUMP UNIT #1	o		HEAT PUMP UNIT #2	25	2	2	12.3	
	12.3	3					o				4		12.3
16.0		5	2	25	AIR HANDLING UNIT #1	o		AIR HANDLING UNIT #2	25	2	6	16.0	
	16.0	7					o				8		16.0
13.6		9	2	25	HEAT PUMP UNIT #3	o		HEAT PUMP UNIT #4	25	2	10	13.6	
	13.6	11					o				12		13.6
16.0		13	2	25	AIR HANDLING UNIT #3	o		AIR HANDLING UNIT #4	25	2	14	16.0	
	16.0	15					o				16		16.0
17.7		17	2	40	HEAT PUMP UNIT #5	o		HEAT PUMP UNIT #6	25	2	18	12.3	
	17.7	19					o				20		12.3
16.0		21	2	30	AIR HANDLING UNIT #5	o		AIR HANDLING UNIT #6	25	2	22	16.0	
	16.0	23					o				24		16.0
12.3		25	2	25	HEAT PUMP UNIT #7	o		SPARE	20	1	26	X	
	12.3	27					o	SPARE	20	1	28		X
16.0		29	2	25	AIR HANDLING UNIT #7	o		SPARE	20	1	30	X	
	16.0	31					o	SPARE	20	1	32		X
X		33	1	20	SPARE	o		SPARE	20	1	34	X	
	X	35	1	20	SPARE		o	SPARE	20	1	36		X
X		37	1	20	SPARE	o		SPARE	20	1	38	X	
	X	39	1	20	SPARE		o	SPARE	20	1	40		X
X		41	1	20	SPARE	o		SPARE	20	1	42	X	

L1 = 206.1 A
L2 = 206.1 A

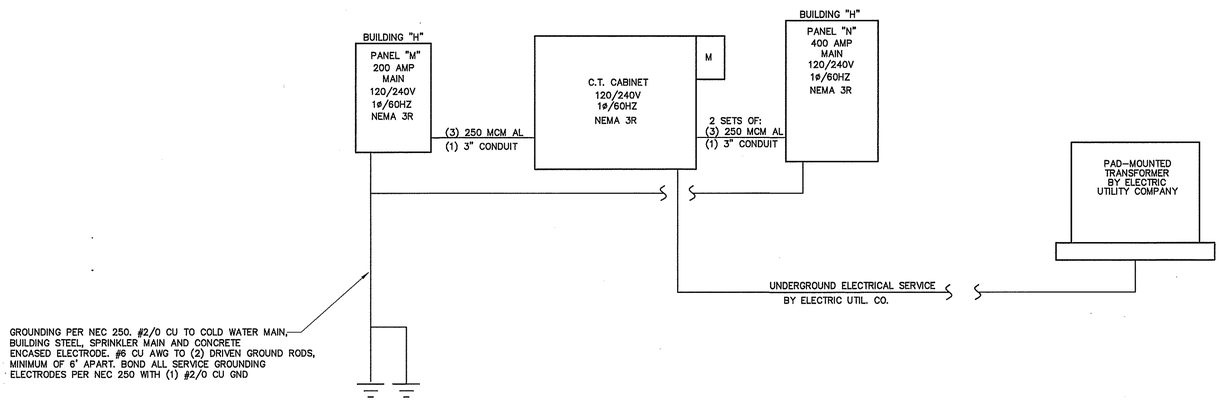

ELECTRICAL RISER DIAGRAM BUILDING "H"

NOT TO SCALE

BUILDING "H"

ELECTRICAL LOAD CALCULATIONS

24,000 SQUARE FEET		VA.
NONCONTINUOUS LOADS:		
44 RECEPTACLES @ 180 VA EA.	7920	
1ST 10000		7920
REMAINDER @ 50%		
TOTAL		7920
CONTINUOUS LOADS:		
GENERAL LIGHTING LOAD VA/SQ. FT.		
(STORAGE) 24,000 SQ. FT. 1.2	28800	
28800 X 1.25		36000
AIR HANDLER UNIT		26880
HEAT PUMPS		22584
EQUIPMENT		600
25% OF LARGEST MOTOR		1134
GRAND TOTAL		95,118

396 AMPS @ 120/240V, 1ø, 60HZ

ELECTRICAL NOTES (GENERAL)

1. THE ELECTRICAL INSTALLATION, EQUIPMENT, MATERIALS, AND WORKMANSHIP SHALL, AS A MINIMUM, BE IN ACCORDANCE WITH THE REQUIREMENTS OF THE NATIONAL ELECTRICAL CODE (NEC), OCCUPATIONAL SAFETY AND HEALTH ACT (OSHA), ALL APPLICABLE FEDERAL, STATE, COUNTY, AND LOCAL CODES, LAWS, AND ORDINANCES, AND RULINGS OF THE INSPECTION AUTHORITIES HAVING JURISDICTION. ALL FEES, PERMITS, ETC., ASSOCIATED WITH THE ELECTRICAL WORK SHALL BE THE RESPONSIBILITY OF THE ELECTRICAL CONTRACTOR.

2. THE DRAWINGS GENERALLY INDICATE THE WORK TO BE INSTALLED, BUT DO NOT SHOW ALL BENDS, BOXES, FITTINGS, AND SPECIALTIES WHICH MAY BE REQUIRED FOR A COMPLETE INSTALLATION. ALL SUCH ITEMS REQUIRED TO COMPLETE THE INSTALLATION ACCORDING TO INDUSTRY ACCEPTED PRACTICES SHALL BE INCLUDED IN THE BID.

3. ALL EQUIPMENT AND MATERIALS SHALL BE NEW AND LISTED AND LABELED BY UNDERWRITERS LABORATORIES, INC.

4. THE ELECTRICAL CONTRACTOR SHALL COORDINATE ALL WORK WITH OTHER TRADES TO AVOID INTERFERENCES AND CONFLICTS. APPARENT INTERFERENCES OR CONFLICTS SHALL BE REPORTED TO THE PRIME CONTRACTOR AND RESOLVED PRIOR TO PROCEEDING WITH THE WORK IN QUESTION.

5. THE ELECTRICAL CONTRACTOR SHALL CONNECT BRANCH CIRCUITS TO THE MAIN LINE TERMINALS OF EQUIPMENT FURNISHED BY OTHER CONTRACTORS. THE ELECTRICAL CONTRACTOR SHALL BE RESPONSIBLE FOR PROVIDING AND INSTALLING ANY NECESSARY SWITCHES, DISCONNECTS, OR OVERCURRENT PROTECTION AHEAD OF SUCH EQUIPMENT.

6. RACEWAYS ARE SHOWN SCHEMATICALLY AND MAY BE REROUTED IN THE FIELD. THEY SHALL BE INSTALLED AT RIGHT ANGLES TO OR PARALLEL WITH BUILDING LINES. THEY SHALL BE RUN CONCEALED WITHIN WALLS OR BUILDING STRUCTURES WHEREVER POSSIBLE.

7. THE MINIMUM ALLOWABLE SIZE FOR ANY CONDUIT, IMC, OR EMT SHALL BE 3/4"; 1/2" MAY BE USED FOR SWITCH LEGS.

8. FULL WEIGHT GALVANIZED RIGID STEEL CONDUIT SHALL BE USED IN THE FOLLOWING AREAS:

A. ON THE EXTERIOR OF THE BUILDING OR ROOF,

B. VERTICAL DROPS WHERE THE CONDUIT CANNOT BE ANCHORED TO WALLS OR OTHER SUPPORT STRUCTURES,

C. WHERE SUBJECT TO MECHANICAL DAMAGE.

D. UNDER FLOOR INSTALLATIONS

9. ALL WIRE AND CABLE SHALL BE ALUMINUM OR COPPER AND HAVE 600 VOLT THHN-THWN INSULATION.

10. THE MINIMUM WIRE SIZE SHALL BE #12 AWG EXCEPT FOR CONTROL WIRING, WHICH MAY BE #16 AWG. CONTROL WIRING SHALL USE STRANDED CONDUCTORS UNLESS OTHERWISE NOTED.

11. ALL METAL RACEWAY SYSTEMS SHALL BE MADE ELECTRICALLY CONTINUOUS. THE RACEWAY SYSTEM SHALL NOT BE THE SOLE GROUNDING METHOD. AN INSULATED COPPER GROUNDING CONDUCTOR SHALL BE INSTALLED FOR ALL FEEDERS AND BRANCH CIRCUITS. AT RECEPTACLES, A GREEN GROUND CONDUCTOR SHALL BE CONNECTED TO THE GROUND TERMINAL OF THE RECEPTACLE.

12. ALL CONDUCTORS TO BE INSTALLED IN CONDUIT.

13. ALL PENETRATIONS OF FIRE WALLS SHALL BE SEALED WITH APPROVED SEALING MATERIALS TO MAINTAIN THE FIRE RATING OF THE WALLS IN ACCORDANCE WITH UL PENETRATION DETAIL W-J-1042.

14. NO. CU 10 AWG CONDUCTORS SHALL BE USED FOR 20 AMP BRANCH CIRCUIT HOMERUNS EXCEEDING 50 FT. TO THE JUNCTION POINT.
20 AMP BRANCH CIRCUIT WIRING SHALL BE NO. 10 CU AWG THROUGHOUT IF THE CIRCUIT IS LONGER THAN 100 FEET TOTAL LENGTH.
20 AMP BRANCH CIRCUIT WIRING SHALL BE NO. 8 CU AWG THROUGHOUT IF THE CIRCUIT IS LONGER THAN 200 FEET TOTAL LENGTH.
20 AMP BRANCH CIRCUIT WIRING SHALL BE NO. 6 CU AWG THROUGHOUT IF THE CIRCUIT IS LONGER THAN 400 FEET TOTAL LENGTH.
20 AMP BRANCH CIRCUIT SHALL NOT EXCEED 500' FEET IN TOTAL LENGTH.

FEEDER SCHEDULE

UNIT	FEEDERS	FUSED DISCONNECT	CONDUIT
AHU-1,2,5	2#10CU, 1#10CU GD	30	3/4"
AHU-3,4,6	2#8CU, 1#10CU GD	30	3/4"
AHU-7	2#6CU, 1#8CU GD	30	3/4"
HP-1	2#12CU, 1#12CU GD	30	3/4"
HP-2,6	2#10CU, 1#10CU GD	30	3/4"
HP-3,4,7	2#8CU, 1#8CU GD	30	3/4"
HP-5	2#10CU, 1#10CU GD	60	3/4"

ELECTRICAL SYSTEM AND EQUIPMENT METHOD OF COMPLIANCE:

ENERGY CODE: PRESCRIPTIVE ☒ PERFORMANCE ☐
ASHRAE 90.1: PRESCRIPTIVE ☐ PERFORMANCE ☐

REFER TO DRAWINGS FOR RISER DIAGRAM AND PANEL SCHEDULES

LIGHTING SCHEDULE

LAMP TYPE REQUIRED IN FIXTURE: SEE SCHEDULE
NUMBER OF LAMPS IN FIXTURE:
BALLASTS TYPE USED IN FIXTURE:
NUMBER OF BALLASTS IN FIXTURE:
TOTAL WATTAGE PER FIXTURE:
TOTAL INTERIOR WATTAGE SPECIFIED VS. ALLOWED:
TOTAL EXTERIOR WATTAGE SPECIFIED VS. ALLOWED:

ADDITIONAL PRESCRIPTIVE COMPLIANCE

506.2.1 MORE EFFICIENT MECHANICAL EQUIPMENT ☒
506.2.2 REDUCED LIGHTING POWER DENSITY ☐
506.2.3 ENERGY RECOVERY VENTILATION SYSTEMS ☐
506.2.4 HIGHER EFFICENCY SERVICE WATER HEATING ☐
506.2.5 ON-SITE SUPPLY OF RENEWABLE ENERGY ☐
506.2.6 AUTOMATIC DAYLIGHTING CONTROL SYSTEMS ☐

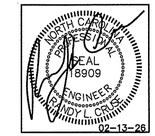

PLANS FOR:
AMPLE STORAGE
BUILDING "H"
ERWIN, NORTH CAROLINA 28339

REVISIONS

NO.	

Cruse And Associates, P.A.
444 EAST EDGERTON STREET
Dunn, North Carolina 28334
PHONE: (910) 892-4129
FAX: (910) 892-4182
LICENSE NO.: C-1721

THESE DOCUMENTS ARE INSTRUMENTS OF SERVICE AND AS SUCH THESE DRAWINGS, DESIGNS, AND DESIGN CONCEPTS PRESENTED REMAIN THE PROPERTY OF THE ENGINEER. PUBLISH OR DUPLICATE THE DRAWINGS OR DESIGNS ONLY WITH THE WRITTEN PERMISSION OF THE ENGINEER.
© COPY RIGHT

DATE 02/13/26
DRAWN BY BAM
JOB NO. 26-02

SHEET NO.
E-3 OF 3

System No. W-L-1001

June 15, 2005

F Ratings — 1, 2, 3 and 4 Hr (See Items 2 and 3)
T Ratings — 0, 1, 2, 3, and 4 Hr (See Item 3)
L Rating At Ambient — less than 1 CFM/sq ft
L Rating At 400 F — less than 1 CFM/sq ft

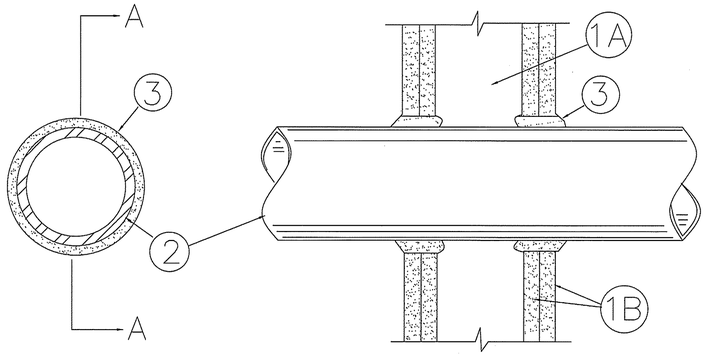

SECTION A-A

1. Wall Assembly — The 1, 2, 3 or 4 hr fire-rated gypsum wallboard/stud wall assembly shall be constructed of the materials and in the manner described in the Individual U300 or U400 Series Wall or Partition Designs in the UL Fire Resistance Directory and shall include the following construction features:

A. Studs — Wall framing may consist of either wood studs (max 2 h fire rated assemblies) or steel channel studs. Wood studs to consist of nom 2 by 4 in. (51 by 102 mm) lumber spaced 16 in. (406 mm) OC with nom 2 by 4 in. (51 by 102 mm) lumber end plates and cross braces. Steel studs to be min 3-5/8 in. (92 mm) wide by 1-3/8 in. (35 mm) deep channels spaced max 24 in. (610 mm) OC.

B. Gypsum Board* — Nom 1/2 or 5/8 in. (13 or 16 mm) thick, 4 ft. (122 cm) wide with square or tapered edges. The gypsum wallboard type, thickness, number of layers, fastener type and sheet orientation shall be as specified in the Individual U300 or U400 Series Design in the UL Fire Resistance Directory. Max diam of opening is 26 in. (660 mm).

2. Through-Penetrant — One metallic pipe, conduit or tubing installed either concentrically or eccentrically within the firestop system. The annular space between pipe, conduit or tubing and periphery of opening shall be min of 0 in / (0 mm). (point contact) to max 2 in. (51 mm) Pipe, conduit or tubing to be rigidly supported on both sides of wall assembly. The following types and sizes of metallic pipes, conduits or tubing may be used:

A. Steel Pipe — Nom 24 in. (610 mm) diam (or smaller) Schedule 10 (or heavier) steel pipe.

B. Iron Pipe — Nom 24 in. (610 mm) diam (or smaller) service weight (or heavier) cast iron soil pipe, nom 12 in (305 mm) diam (or smaller) or Class 50 (or heavier) ductile iron pressure pipe.

C. Conduit — Nom 6 in. (152 mm) diam (or smaller) steel conduit or nom 4 in (102 mm) diam (or smaller) steel electrical metallic tubing

D. Copper Tubing — Nom 6 in. (152 mm) diam (or smaller) Type L (or heavier) copper tubing

E. Copper Pipe — Nom 6 in. (152 mm) diam (or smaller) Regular (or heavier) copper pipe.

F. Through Penetrating Product* — Flexible Metal Piping The following types of steel flexible metal gas piping may be used:

1. Nom 2 in. (51 mm) diam (or smaller) steel flexible metal gas piping. Plastic covering on piping may or may not be removed on both sides of floor or wall assembly.

OMEGA FLEX INC

2. Nom 1 in. (25 mm) diam (or smaller) steel flexible metal gas piping. Plastic covering on piping may or may not be removed on both sides of floor or wall assembly.

GASTITE, DIV OF TITEFLEX

3. Nom 1 in. (25 mm) diam (or smaller) steel flexible metal gas piping. Plastic covering on piping may or may not be removed on both sides of floor or wall assembly.

WARD MFG L L C

3. Fill, Void or Cavity Material* — Caulk or Sealant — Min 5/8. , 1-1/4,1-7/8 and 2-1/2 in. (16, 32, 48 and 64 mm) thickness of caulk for 1, 2, 3 and 4 hr rated assemblies, respectively, applied within annulus, flush with both surfaces of wall. Min 1/4 in. (6 mm) diam bead of caulk applied to gypsum board/penetrant interface at point contact location on both sides of wall. The hourly F Rating of the firestop system is dependent upon the hourly fire rating of the wall assembly in which it is installed, as shown in the following table. The hourly T Rating of the firestop system is dependent upon the type or size of the pipe or conduit and the hourly fire rating of the wall assembly in which it is installed, as tabulated below:

Max Pipe or Conduit Diam In (mm)	F Rating Hr	T Rating Rating Hr
1 (25)	1 or 2	0+, 1 or 2
1 (25)	3 or 4	3 or 4
4 (102)	1 or 2	0
6 (152)	3 or 4	0
12 (305)	1 or 2	0

+When copper pipe is used, T Rating is 0 h.

3M COMPANY ? CP 25WB+ or FB-3000 WT.

*Bearing the UL Classification Mark

System No. W-L-2179

September 17, 2001

F Rating — 1 Hr
T Rating — 1 Hr

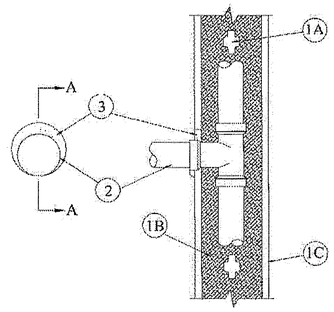

SECTION A-A

1. Wall Assembly — The fire rated gypsum wallboard/stud wall assembly shall be constructed of the materials and in the manner specified in the Individual U300 or U400 Series Wall and Partition Designs in the UL Fire Resistance Directory and shall include the following construction features:

A. Studs — Wall framing may consist of either wood studs or steel channel studs. Wood studs to consist of nom 2 by 4 in. lumber spaced max 16 in. OC. The steel studs to be min 3-5/8 in. wide and spaced max 24 in. OC.

B. Insulation, Glass Fiber* — R-13 fiber glass insulation installed entirely within single stud cavity of nonmetallic pipe (Item 2).

C. Gypsum Board* — One layer of nom 5/8 in. thick gypsum wallboard, as specified in the Individual Wall and Partition Design. Max diam of opening is 3-3/4 in.

2. Nonmetallic Pipe — Nonmetallic pipe, installed within stud cavity and connected to nonmetallic tee. Nonmetallic pipe penetrating wall assembly on one side of wall to be installed either concentrically or eccentrically within the firestop system. The annular space between pipe and periphery of opening shall be min 0 in. (point contact) to max 1 in. Pipe to be rigidly supported on penetrating side of wall assembly. The following types of and sizes of nonmetallic pipes and tees may be used:

A. Polyvinyl Chloride (PVC) Pipe — Nom 2 in. diam (or smaller) Schedule 40 cellular core or solid core PVC pipe and tee for use in vented (drain, waste or vent) or closed (process and supply) piping systems.

B. Chlorinated Polyvinyl Chloride (CPVC) Pipe — Nom 2 in. diam (or smaller) SDR17 CPVC pipe and tee for use in vented (drain, waste or vent) or closed (process and supply) piping systems.

C. Acrylonitrile Butadiene Styrene (ABS) Pipe — Nom 2 in. diam (or smaller) Schedule 40 cellular or solid core ABS pipe and tee for use in vented (drain, waste or vent) or closed (process and supply) piping systems.

3. Fill, Void or Cavity Material* — Sealant — Min 5/8 in. thickness of fill material applied within annulus, flush with both surfaces of wall. At point contact locations between wallboard and pipe, a min 1/2 in. diam bead of fill material shall be applied at the pipe/wallboard interface.

JOHNS MANVILLE INTERNATIONAL INC — FireTemp™ CI, FireTemp™ CE

*Bearing the UL Classification Mark

System No. W-L-2003

November 20, 2009

F Ratings — 1 and 2 Hr (See Item 3)
T Ratings — 1 and 2 Hr (See Item 3)
L Rating At Ambient — 7 CFM/sq ft (See Item 3B)
L Rating At 400 F — less than 1 CFM/sq ft (See Item 3B)

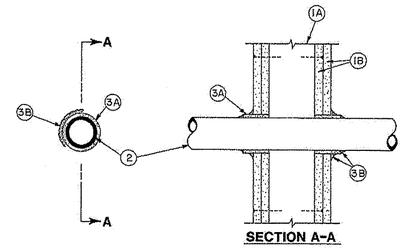

SECTION A-A

1. Wall Assembly — The 1 or 2 hr fire-rated gypsum board/stud wall assembly shall be constructed of the materials and in the manner described in the Individual U300, U400 or V400 Series Wall or Partition Design in the UL Fire Resistance Directory and shall include the following construction features:

A. Studs — Wall framing may consist of either wood studs or steel channel studs. Wood studs to consist of nom 2 by 4 in. (51 by 102 mm) lumber spaced 16 in. (406 mm) OC with nom 2 by 4 in. (51 by 102 mm) lumber end plates and cross braces. Steel studs to be min 3-5/8 in. (92 mm) wide by 1-3/8 in. (35 mm) deep channels spaced max 24 in. (610 mm) OC.

B. Gypsum Board* — 5/8 in. (16 mm) thick, 4 ft (122 cm) wide with square or tapered edges. The gypsum board type, thickness, number of layers, fastener type and sheet orientation shall be as specified in the Individual U300, U400 or V400 Series Design in the UL Fire Resistance Directory. Max diam of opening is 3-1/8 in. (79 mm).

2. Through Penetrants — One nonmetallic pipe or conduit to be centered in the through opening. The annular space between pipe or conduit and periphery of opening shall be min 1/4 in. (6 mm) and max 3/8 in. (10 mm). Pipe or conduit to be rigidly supported on both sides of the floor-ceiling assembly. The following types and sizes of nonmetallic pipes or conduits may be used:

A. Polyvinyl Chloride (PVC) Pipe — Nom 2 in. (51 mm) diam (or smaller) Schedule 40 solid core PVC pipe for use in closed (process or supply) or vented (drain, waste or vent) piping system.

B. Rigid Nonmetallic Conduit++ — Nom 2 in. (51 mm) diam (or smaller)(Schedule 40 or 80) PVC conduit installed in accordance with the National electric Code (NFPA No. 70).

C. Chlorinated Polyvinyl Chloride (CPVC) Pipe — Nom 2 in. (51 mm) diam (or smaller) SDR13.5 CPVC pipe for use in closed (process or supply) piping systems.

D. Cellular Core Polyvinyl Chloride (ccPVC) Pipe — Nom 2 in. (51 mm) diam (or smaller) Schedule 40 cellular core PVC pipe for use in closed (process or supply) or vented (drain, waste or vent) piping system.

E. Acrylonitrile Butadiene Styrene (ABS) Pipe — Nom 2 in. (51 mm) diam (or smaller) Schedule 40 solid core ABS pipe for use in closed (process or supply) or vented (drain, waste or vent) piping systems.

F. Cellular Core Acrylonitrile Butadiene Styrene (ccABS) Pipe — Nom 2 in. (51 mm) diam (or smaller) Schedule 40 cellular core ABS pipe for use in closed (process or supply) or vented (drain, waste or vent) piping systems.

3. Firestop System — Installed symmetrically on both sides of wall assembly. The hourly F and T Ratings for the firestop system are equal to the hourly fire rating of the wall assembly in which it is installed. The details of the firestop system shall be as follows.

A. Fill, Void or Cavity Materials* — Wrap Strip — Nom 1/4 in. (6 mm) thick intumescent elastomeric material faced on one side with aluminum foil, supplied in 2 in. (51 mm) wide strips. Nom 2 in. (51 mm) wide strip tightly wrapped around nonmetallic pipe (foil side out) with seam butted. Wrap strip layer securely bound with steel wire or aluminum foil tape and slid into annular space approx 1-1/4 in. (32 mm) such that approx 3/4 in. (19 mm) of the wrap strip protrudes from the wall surface.

3M COMPANY — FS-195+

B. Fill, Void or Cavity Materials* — Caulk, Sealant or Putty — Min 5/8 in. (16 mm) thickness of caulk or putty applied into annular space between wrap strip and periphery of opening. A nom 1/4 in. (6 mm) diam bead of caulk or putty to be applied to the wrap strip/wall interface and to the exposed edge of the wrap strip layers approx 3/4 in. (19 mm) from the wall surface.

3M COMPANY — CP 25WB+ caulk or MP+ Stix putty, IC 15WB+ caulk, FireDam 150+ caulk or FB-3000 WT sealant. (Note: L Ratings apply only when Type CP 25WB+ caulk or FB-3000 WT sealant is used. CP 25WB+ and FireDam 150+ not suitable for use with CPVC pipes.)

C. Foil Tape — (not shown) — Nom 4 in. (102 mm) wide, 3 mil thick aluminum tape wrapped around pipe prior to the installation of the wrap strip (Item 3A). Min of one wrap, flush with both sides of wall and proceeding outward. Tape is not required for pipes shown in Items 2A, 2B and 2C.

*Bearing the UL Classification Mark

PENETRATION DETAILS

NOT TO SCALE

NORTH CAROLINA PROFESSIONAL SEAL 18909 ENGINEER RANDY L. CRUSE
02-13-26

PLANS FOR:
AMPLE STORAGE
BUILDING "H"
ERWIN, NORTH CAROLINA 28339

REVISIONS

NO.	

Cruse And Associates, P.A.
414 EAST EDGERTON STREET
RALEIGH, NORTH CAROLINA 27604
PH: (919) 882-4439
FAX: (919) 882-8162
LICENSE NO.: C-1721

THESE DOCUMENTS ARE INSTRUMENTS OF SERVICE AND AS SUCH THESE DRAWINGS, DESIGNS, AND DESIGN CONCEPTS PRESENTED REMAIN THE PROPERTY OF THE ENGINEER. PUBLISH OR DUPLICATE THE DRAWINGS OR DESIGNS ONLY WITH THE WRITTEN PERMISSION OF THE ENGINEER.
© COPY RIGHT

DATE 02/13/26
DRAWN BY BAM
JOB NO. 26-02

SHEET NO.
PME-1 OF 1

Kwik Bolt 3 Expansion Anchor Installation Instructions

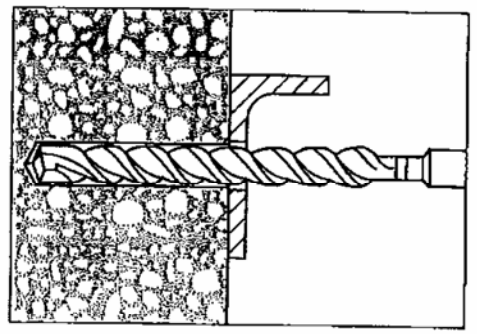

1. Hammer drill a hole to the same nominal diameter as the Kwik Bolt 3. The hole depth must exceed the anchor embedment by at least one diameter. The fixture may be used as a drilling template to ensure proper anchor location.

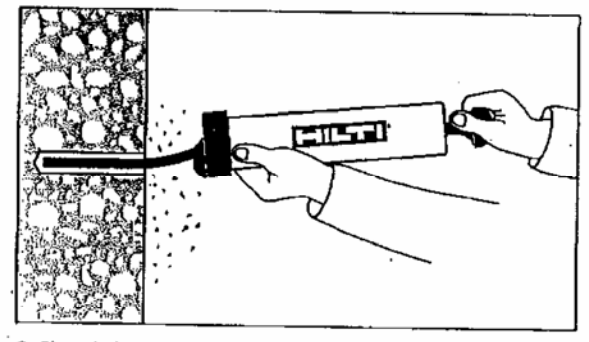

2. Clean hole.

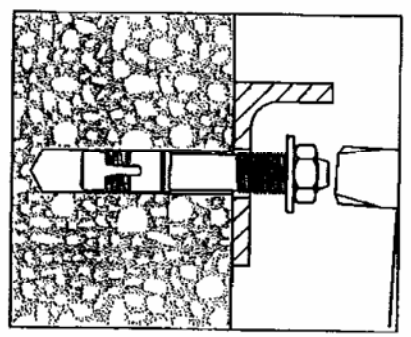

3. Drive the Kwik Bolt 3 into the hole using a hammer. The anchor must be driven until at least six threads are below the surface of the fixture.

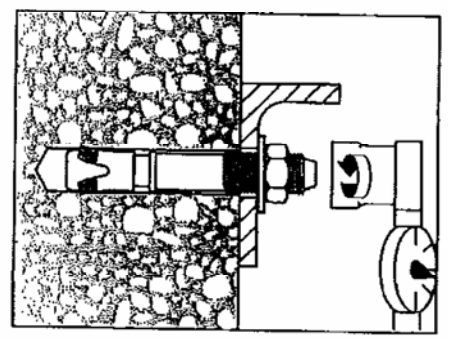

4. Tighten the nut to the recommended installation torque.

DESIGN INFORMATION	Units	Nominal Anchor Diameter				
		1/4	3/8	1/2	5/8	3/4
Installation torque	ft*lb	4	20	40	60	110
	(Nm)	(5)	(27)	(54)	(81)	(149)

Kwik Bolt TZ Anchor Installation Instructions into normal-weight and lightweight concrete

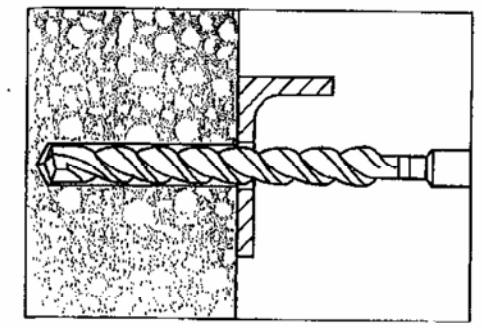

1. Hammer drill a hole to the same nominal diameter as the Kwik Bolt TZ. The hole depth must exceed the anchor embedment by at least 1/4 inch. The fixture may be used as a drilling template to ensure proper anchor location.

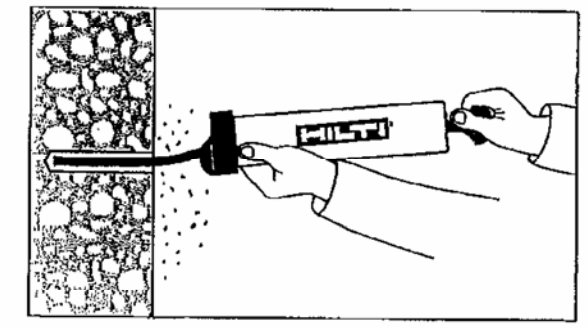

2. Clean hole.

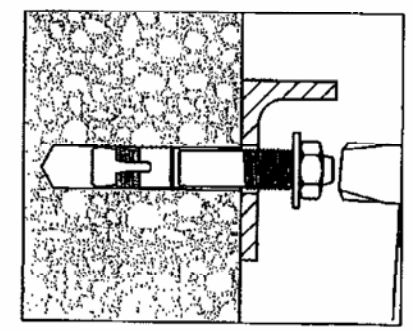

3. Drive the Kwik Bolt TZ into the hole using a hammer. The anchor must be driven until at least 4 threads are below the surface of the fixture.

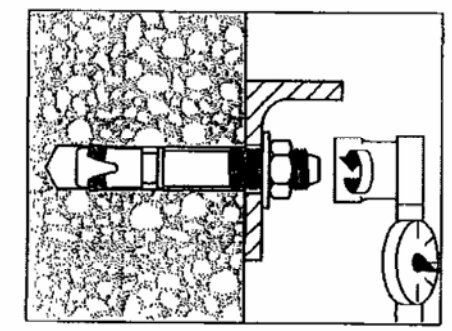

4. Tighten the nut to the recommended installation torque.

NORTH CAROLINA PROFESSIONAL SEAL 029129 ENGINEER STEVEN W. SCHAUB

FEB 26 2026

SETTING INFORMATION	Units	Nominal anchor diameter (in.)			
		3/8	1/2	5/8	3/4
Installation torque	ft-lb	25	40	60	110
	(Nm)	(34)	(54)	(81)	(149)

RELEASE FOR CONSTRUCTION DATE 2/23/2026

REVISIONS	DATE	BY

BETCO
228 COMMERCE BLVD.
STATESVILLE, NC 28625
(800)654-7813

SHEET TITLE: Kwik Bolt Anchor Installation Instructions

DRAWN BY: BDL	APPROVED BY:	DRAWING NUMBER: ERC016X
SCALE: NTS	DATE: 11/8/2011	

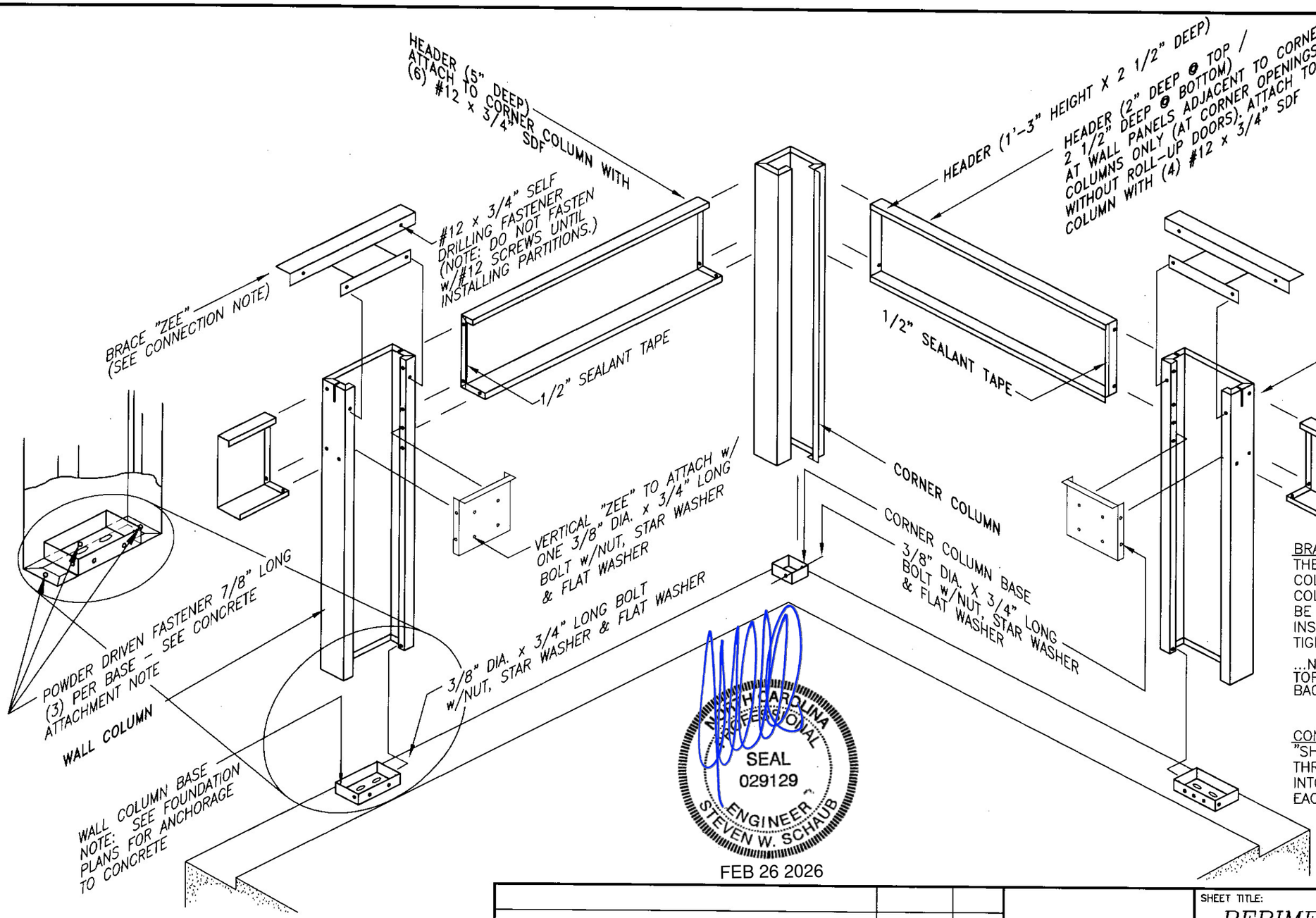

BRACE ZEE CONNECTION NOTE:
THE (2) 3/8" BOLTS THRU THE WALL COLUMN BRACE BRACKET INTO THE COLUMN SHOULD ONLY BE "FINGER" TIGHT UNTIL ROOF IS INSTALLED. AFTER ROOF IS INSTALLED TIGHTEN TO NORMAL TORQUE.

...NOTE: BRACE "ZEE" TO FIT IN SLOT AT TOP OF WALL COLUMN AND SCREW TO BACKSIDE OF HEADERS.

CONCRETE ATTACHMENT NOTE:
"SHOOT" (1) POWDER DRIVEN FASTENER THRU BACK OF BASE & LIP OF COLUMN INTO CONCRETE. "SHOOT" (1) PDF THRU EACH SIDE OF COLUMN INTO CONCRETE.

NORTH CAROLINA PROFESSIONAL SEAL 029129 ENGINEER STEVEN W. SCHAUB

FEB 26 2026

REVISIONS	DATE	BY

BETCO
228 COMMERCE BLVD.
STATESVILLE, NC 28625
(800)654-7813

SHEET TITLE:
PERIMETER WALL ASSEMBLY
All Eave Heights

DRAWN BY: J Pope	APPROVED BY:	DRAWING NUMBER:
SCALE: NTS	DATE: 6/17/94	*ERC100X*

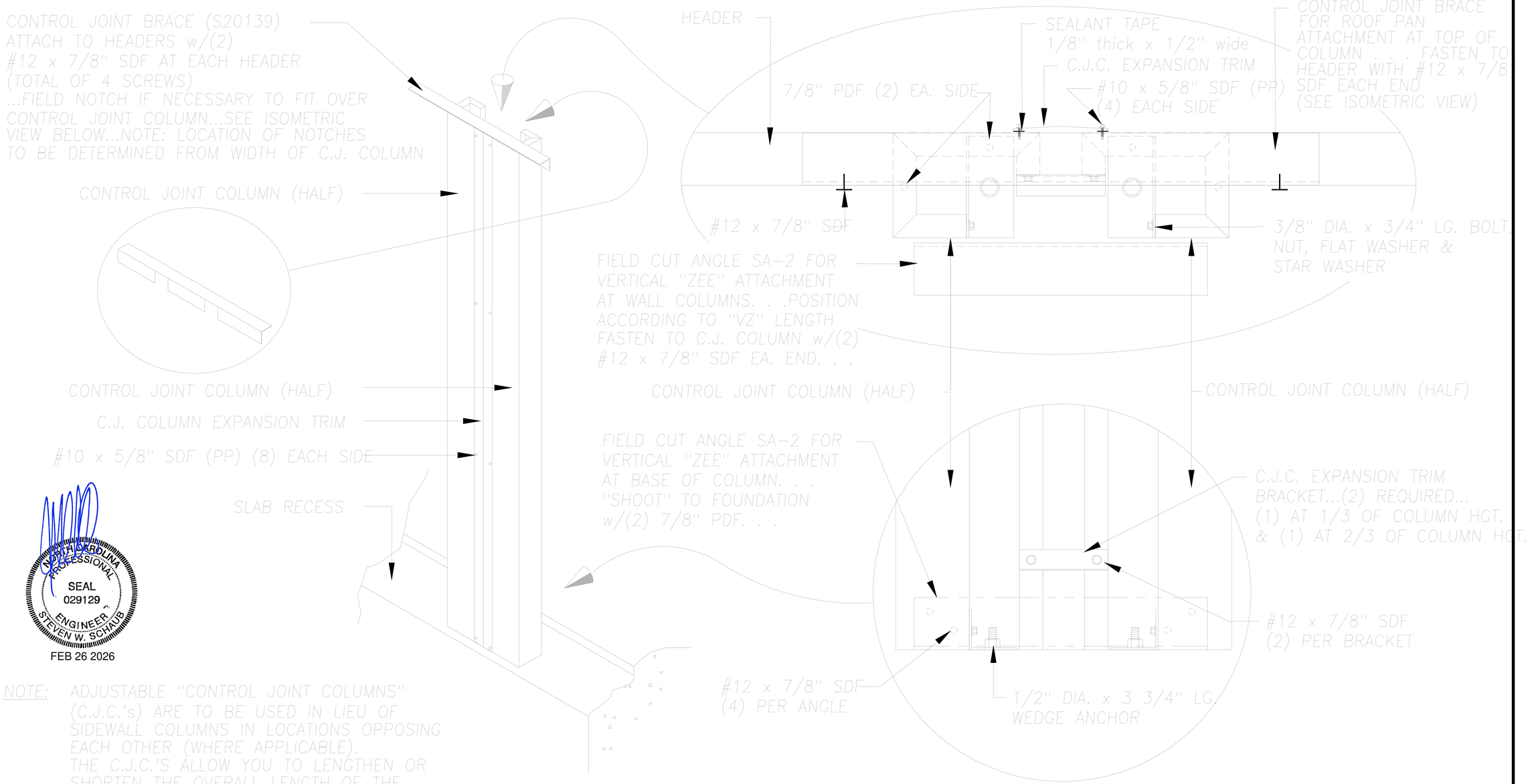

NORTH CAROLINA PROFESSIONAL SEAL 029129 ENGINEER STEVEN W. SCHAUB
FEB 26 2026

NOTE: ADJUSTABLE "CONTROL JOINT COLUMNS" (C.J.C.'s) ARE TO BE USED IN LIEU OF SIDEWALL COLUMNS IN LOCATIONS OPPOSING EACH OTHER (WHERE APPLICABLE). THE C.J.C.'S ALLOW YOU TO LENGTHEN OR SHORTEN THE OVERALL LENGTH OF THE BLDG. BY UP TO 2". THIS GIVES YOU THE ABILITY TO MAKE ADJUSTMENTS FOR A SLAB THAT IS NOT EXACTLY THE DIMENSIONS SPECIFIED.

DO NOT INSTALL WEDGE ANCHORS IN C.J.C. LOCATIONS UNTIL COLUMNS ARE IN PLACE & ADJUSTED AS REQUIRED.

REVISIONS	DATE	BY
4 ADDED SDF'S TO CJC TRIM	11/15/05	CM
3 CHANGED W/A LENGTH TO 3 3/4"	4/30/03	RSG
2 GENERAL REVISIONS	11/22/99	JAB
1 GENERAL REVISIONS	3-8-99	FOX

BETCO, INC.
BUILDING THE FUTURE OF SELF STORAGE
P.O. BOX 1650
STATESVILLE, NC 28687

SHEET TITLE: CONTROL JOINT COLUMN AND TRIM INSTALLATION

DRAWN BY:	APPROVED BY:	DRAWING NUMBER:
K.D.W.		ERC105X
SCALE: NTS	DATE: 8/1/94	

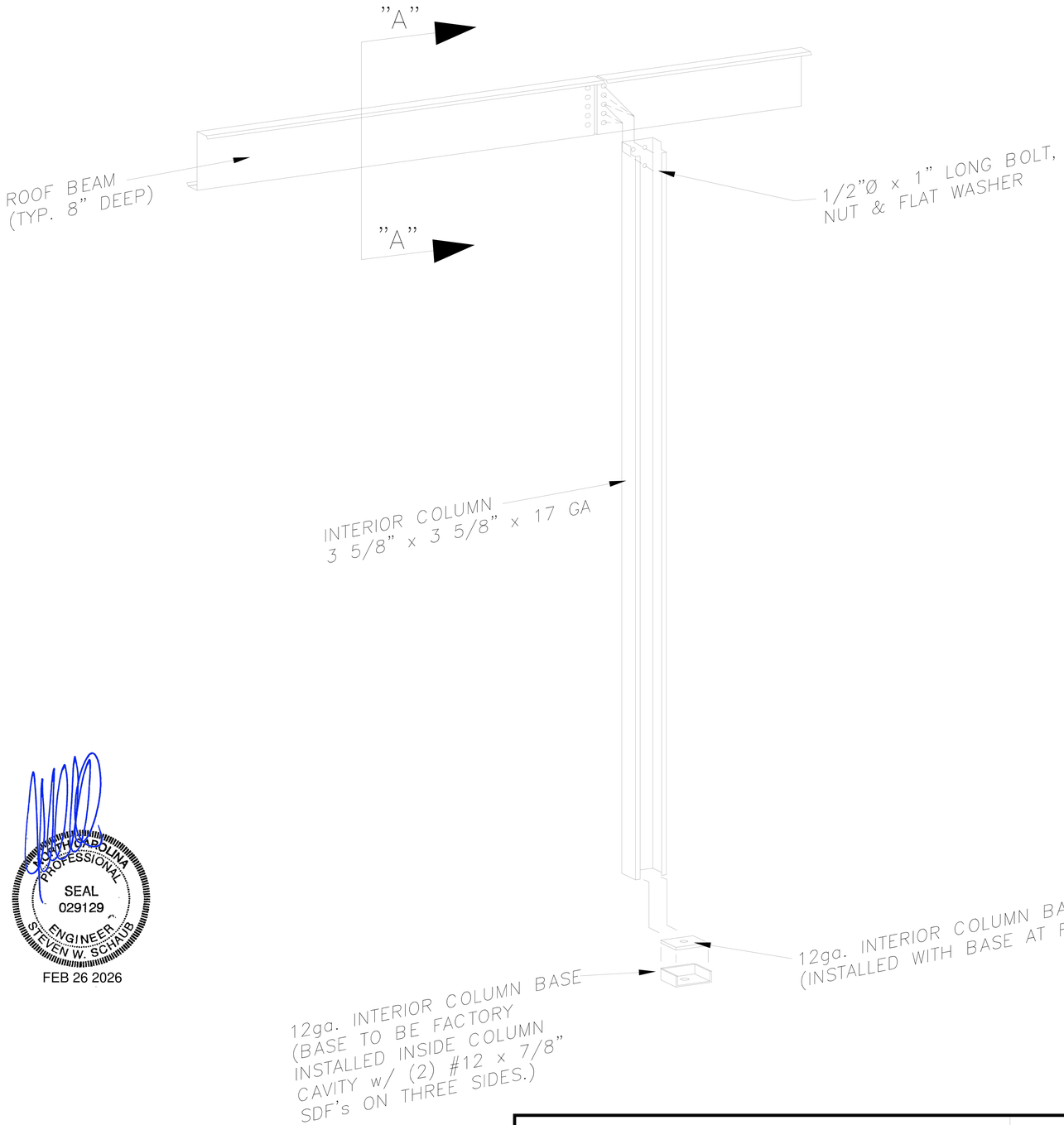

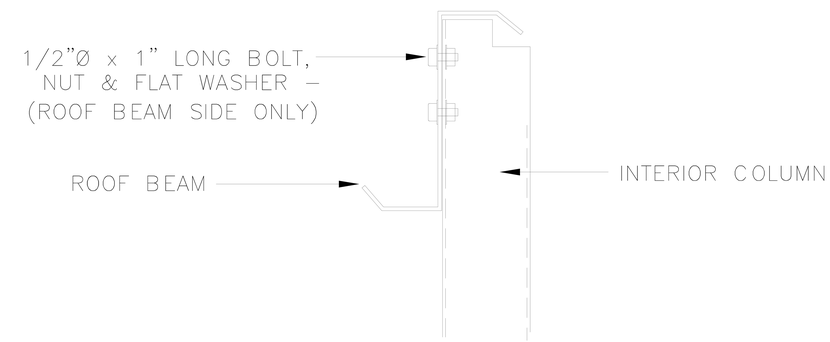

SECTION
"A" – "A"

NOTE: SEE BUILDING CROSS SECTION FOR COLUMN HEIGHT & ROOF BEAM HGT. ABOVE FINISHED FLOOR

NORTH CAROLINA PROFESSIONAL SEAL 029129 ENGINEER STEVEN W. SCHAUB
FEB 26 2026

3 REVISED COLUMN SIZE	8-29-02	BAM
2 DETAIL REVISIONS	3-16-99	FOX
1 GENERAL REVISIONS	3-9-99	FOX
REVISIONS	DATE	BY

BETCO, INC.
P.O. BOX 1650
STATESVILLE, NC 28687

SHEET TITLE: *Interior Column Installation All Heights*

DRAWN BY: J POPE	APPROVED BY:	DRAWING NUMBER: ERC110X
SCALE: NTS	DATE: 1/30/98	

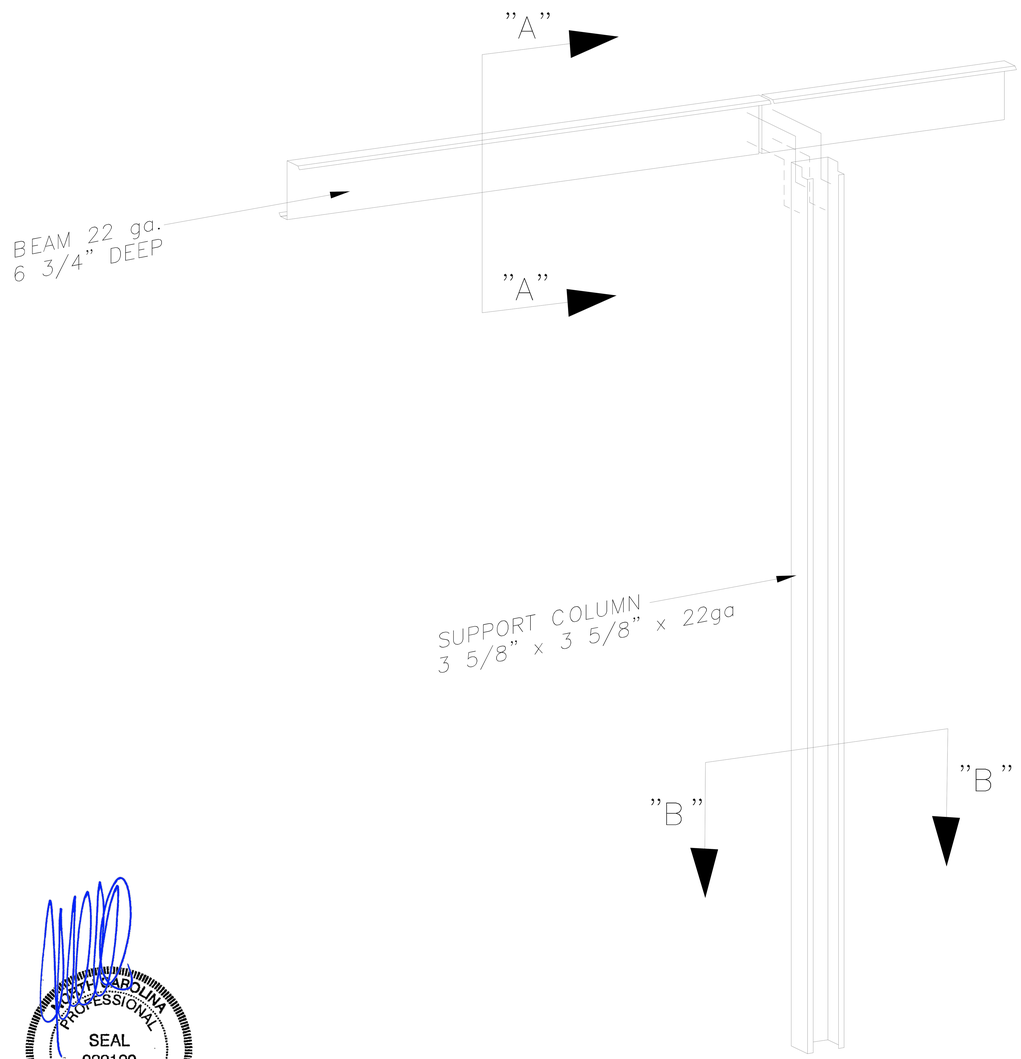

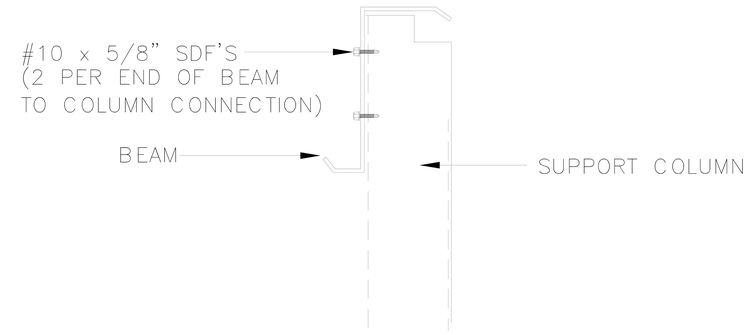

SECTION
"A" – "A"

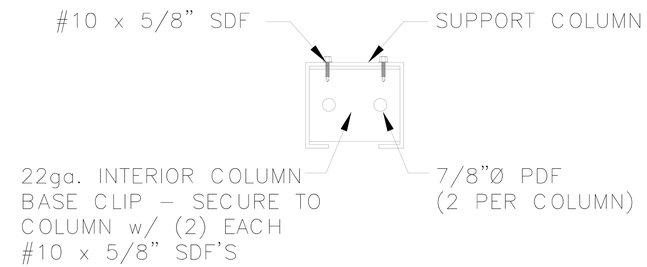

SECTION
"B" – "B"

NOTE: SEE BUILDING CROSS SECTION FOR COLUMN HEIGHT AND FOR ROOF BEAM HEIGHT ABOVE FINISHED FLOOR

NORTH CAROLINA PROFESSIONAL SEAL 029129 ENGINEER STEVEN W. SCHAUB
FEB 26 2026

REVISIONS	DATE	BY
4 REVISED COLUMN SIZE	8/29/02	BAM
3 GENERAL REVISIONS	3/6/02	BD
2 REMOVED HOLES FROM BEAM & COLUMN	2/6/02	JCM
1 GENERAL REVISIONS	3-8-99	FOX

BETCO
P.O. BOX 1650
STATESVILLE, NC 28687

SHEET TITLE: *Interior Door Structure At Corridor Installation All Heights*

DRAWN BY: J POPE
APPROVED BY:
DRAWING NUMBER: *ERC112X*
SCALE: NTS
DATE: 1/30/98

BRACE "ZEE" INSTALLATION
THE (2) 3/8" BOLTS THRU THE BRACE "ZEE" INTO THE WALL COLUMN SHOULD ONLY BE "FINGER" TIGHT UNTIL ROOF IS INSTALLED. AFTER ROOF IS INSTALLED TIGHTEN TO NORMAL TORQUE.
...NOTE: BRACE "ZEE" TO FIT IN SLOT AT TOP OF WALL COLUMN AND SCREW TO BACKSIDE OF HEADER...

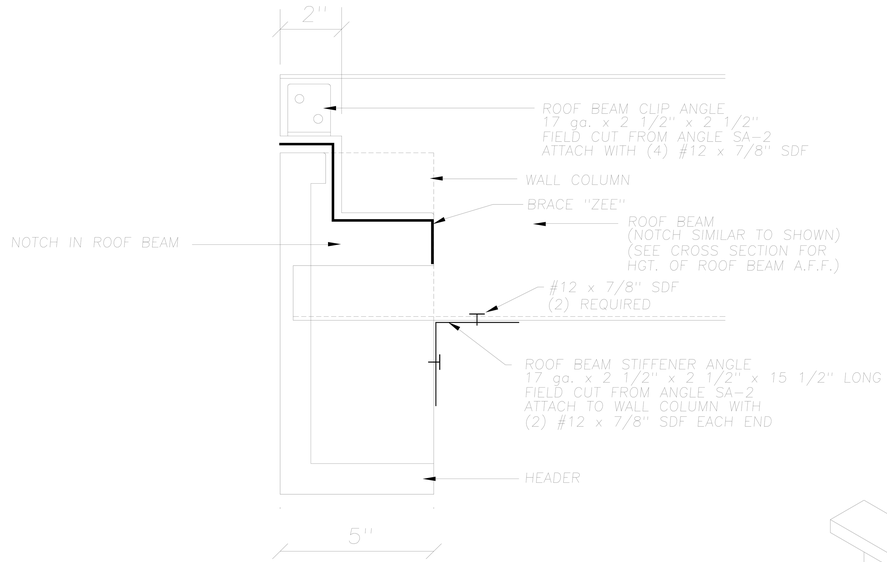

SECTION A—A

NOTE:
REFER TO BUILDING CROSS SECTION DRAWING FOR DIMENSION FROM FINISHED FLOOR ELEVATION TO TOP OF ROOF BEAM. NOTCH AND SET ROOF BEAM AT THE HEIGHT SHOWN ON CROSS SECTION SO THAT THE ROOF BEAM IS LEVEL FOR THE ENTIRE LENGTH OF BUILDING.

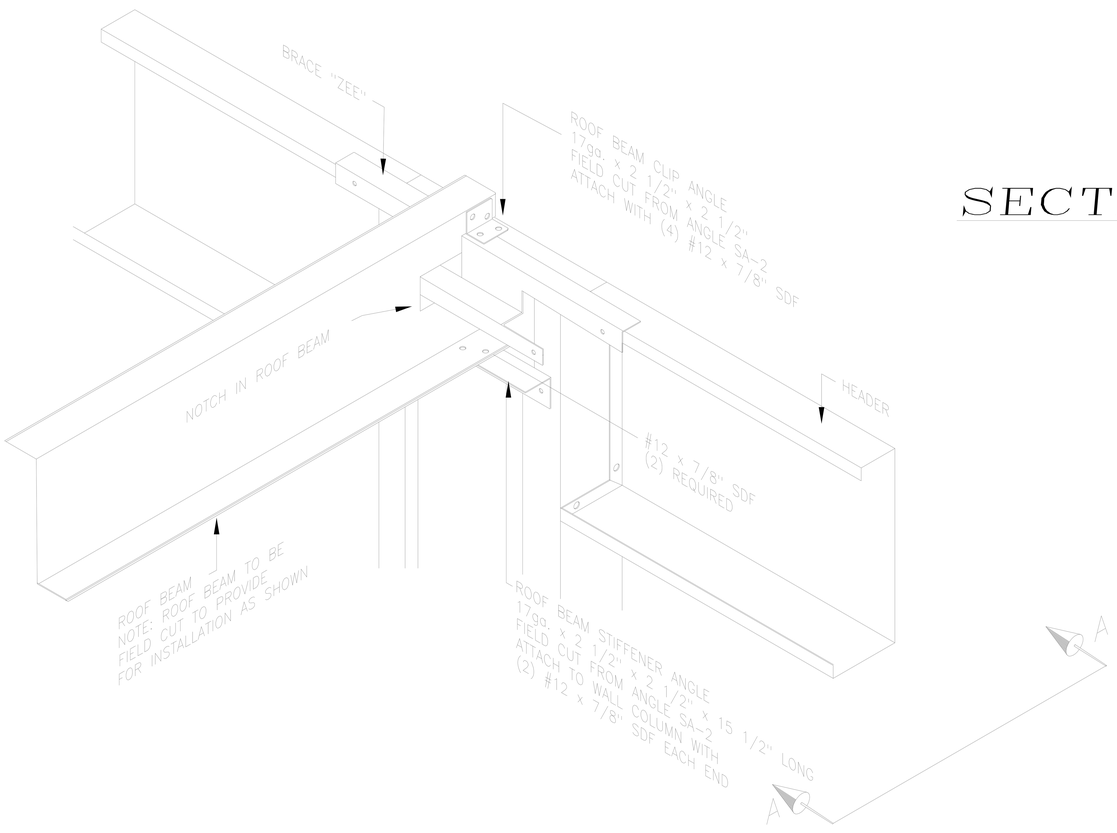

ROOF BEAM AT COLUMN

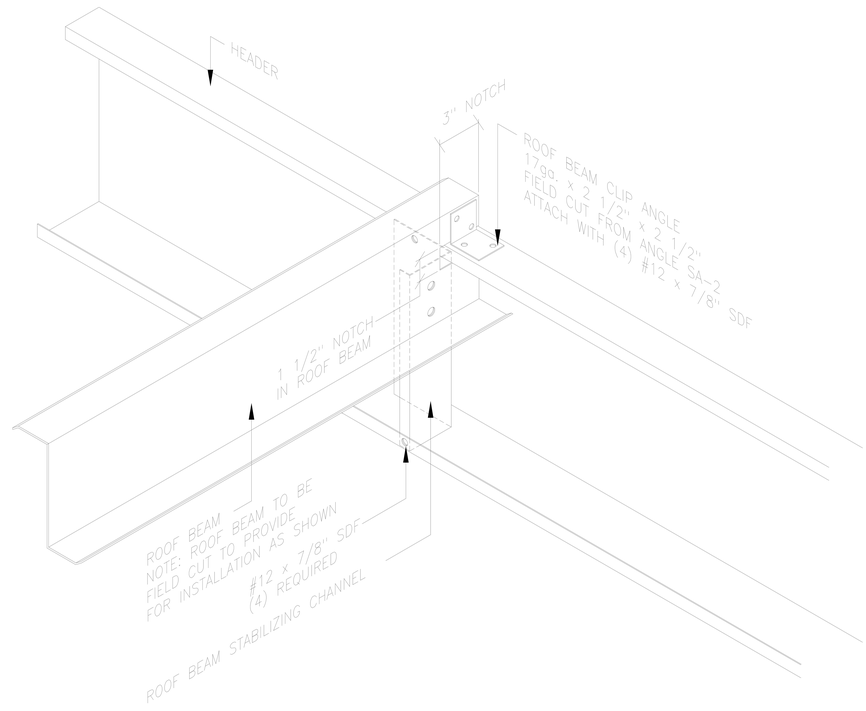

ROOF BEAM AT HEADER

NORTH CAROLINA PROFESSIONAL SEAL 029129 ENGINEER STEVEN W. SCHAUB
FEB 26 2026

2 REVISED FASTENER SIZE	1/15/03	JCM
1 MODIFIED NOTCH IN ROOF BEAM	3/9/99	FOX
REVISIONS	DATE	BY

BETCO, INC.
BUILDING THE FUTURE OF SELF STORAGE
P.O. BOX 1650
STATESVILLE, NC 28687

SHEET TITLE: Roof Beam Assembly Details

DRAWN BY: B.D.	APPROVED BY:	DRAWING NUMBER:
SCALE: NTS	DATE: 5/8/98	ERC115X

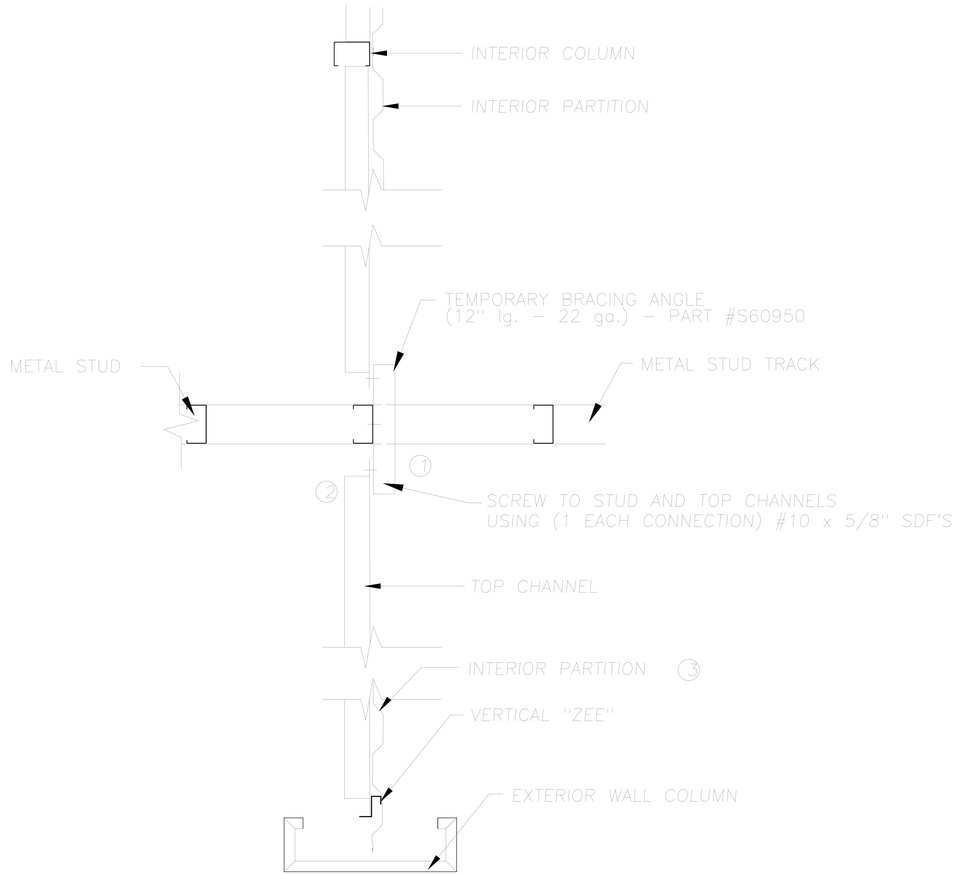

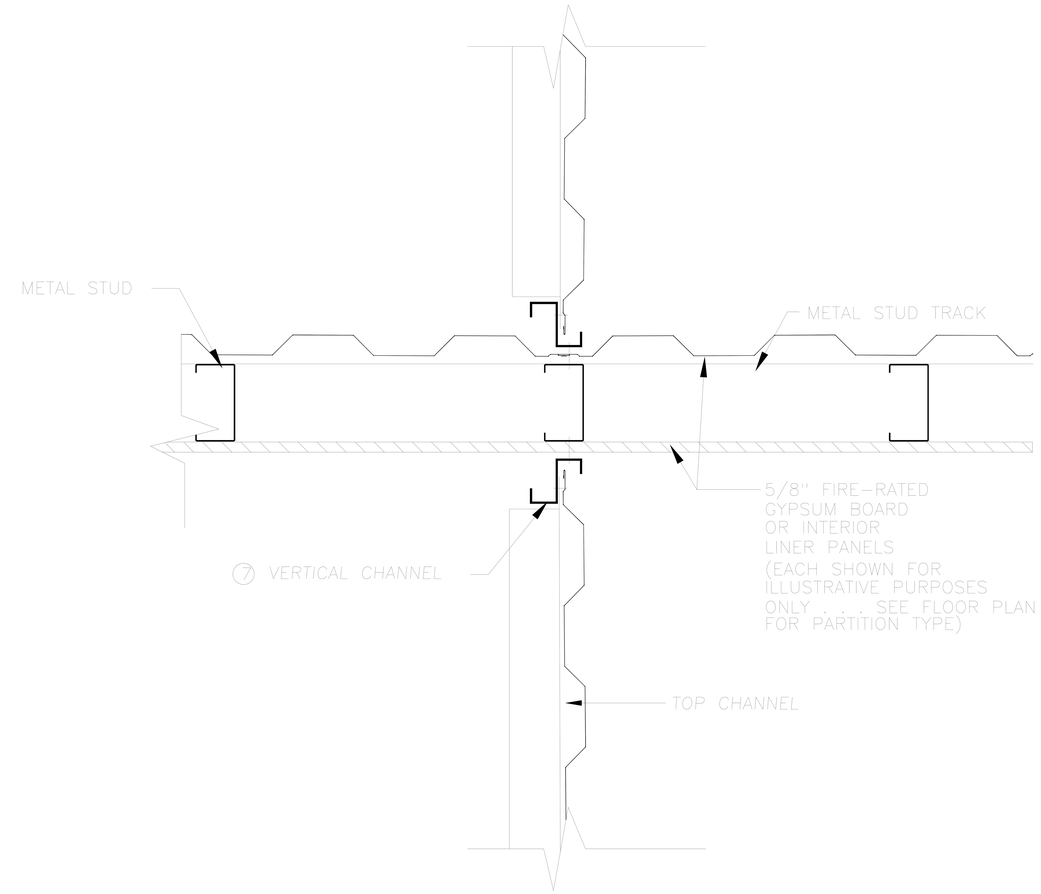

TEMPORARY BRACING ANGLE INSTALLATION DETAIL

1) AFTER STANDING COLUMNS AND STUDWALL. . . ATTACH TEMPORARY BRACING ANGLE TO STUD AT SAME HEIGHT AS TOP CHANNEL AS SHOWN ON BUILDING CROSS SECTION
2) ATTACH TOP CHANNEL TO TEMPORARY BRACING ANGLE
3) INSTALL 3 PARTITION PANELS & USE TO PLUMB COLUMNS AND STUDWALL
4) IF REQUIRED, INSTALL CONTINUOUS INSUSLATION SUPPORTS AND INSULATION
5) INSTALL ROOF PANELS
6) REMOVE TEMPORARY BRACING ANGLE PRIOR TO INSTALLING GYPSUM BOARD OR LINER PANELS
7) ATTACH VERTICAL CHANNELS TO STUD
8) ATTACH FRAMING TO VERTICAL CHANNEL & INSTALL REMAINING PARTITION PANELS

NORTH CAROLINA PROFESSIONAL SEAL 029129 ENGINEER STEVEN W. SCHAUB

FEB 26 2026

REVISIONS	DATE	BY

BETCO
P.O. BOX 1650
STATESVILLE, NC 28687

SHEET TITLE: TEMPORARY BRACING @ PARTITIONS & INT. STUDWALL

DRAWN BY:	APPROVED BY:	DRAWING NUMBER:
B. MCDANIEL		ERC130X
SCALE: NTS	DATE: 3/19/98	

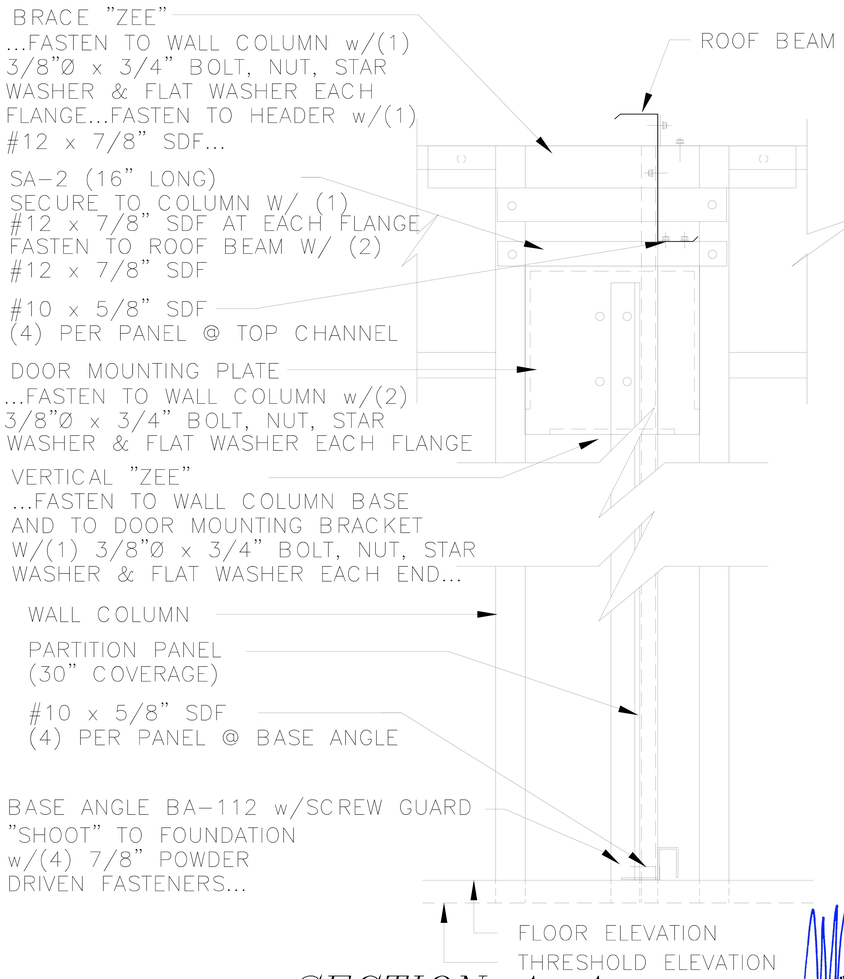

SECTION A-A

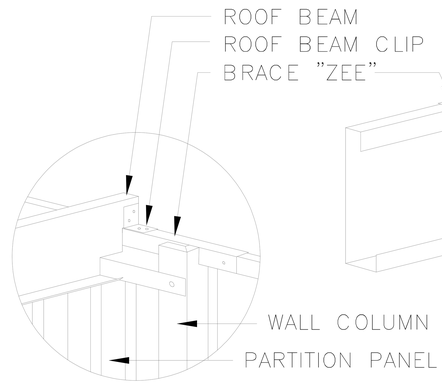

OPPOSITE VIEW THIS CORNER

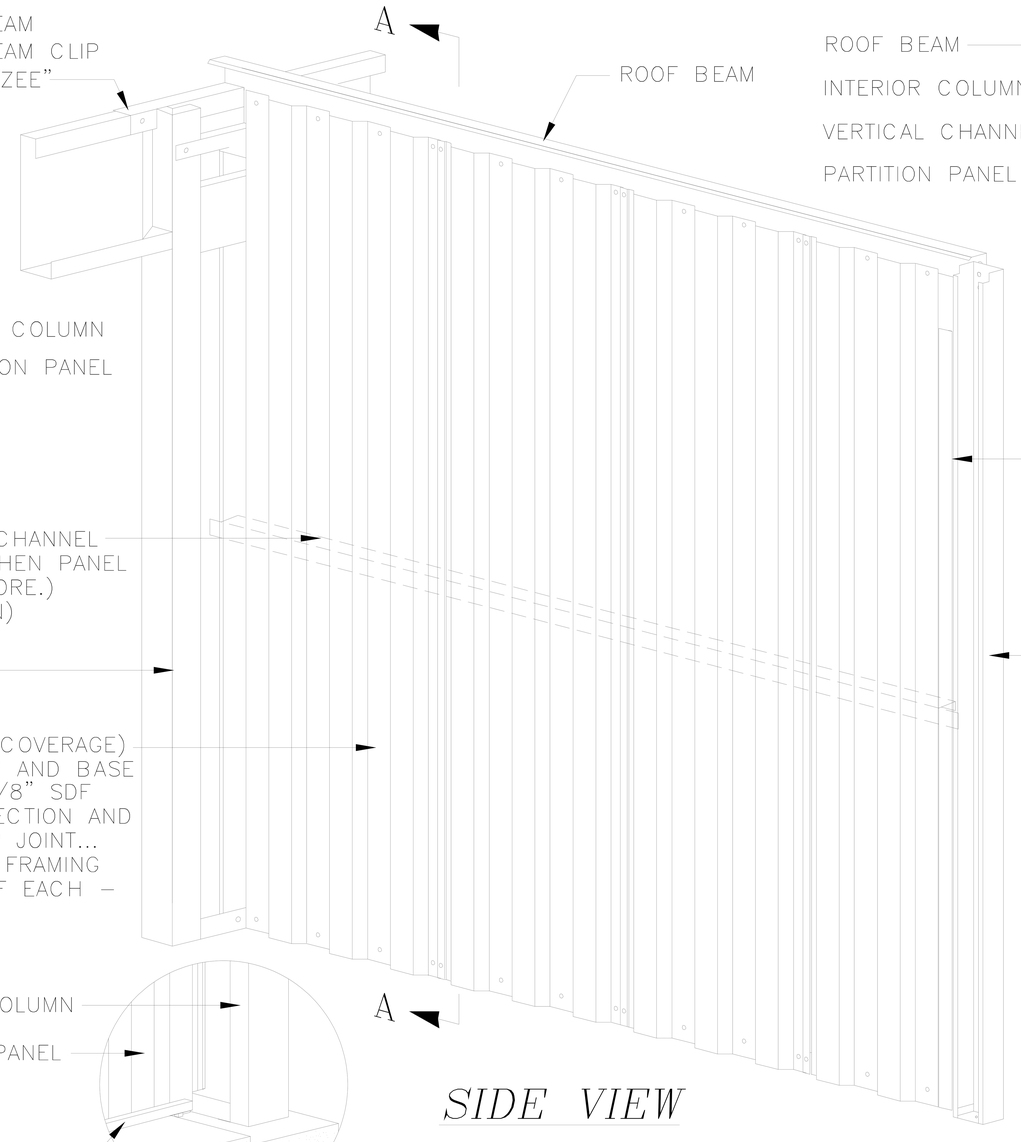

SIDE VIEW

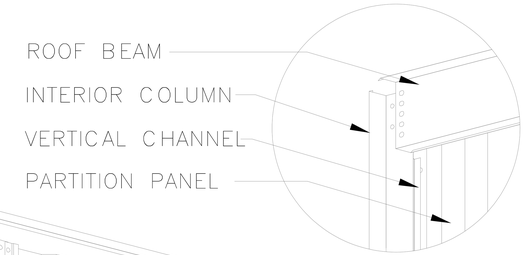

OPPOSITE VIEW THIS CORNER

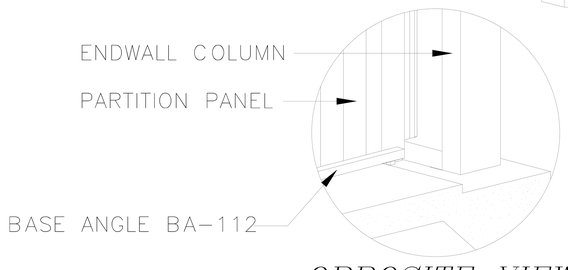

OPPOSITE VIEW THIS CORNER

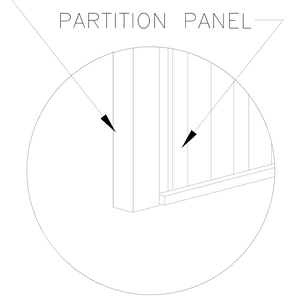

OPPOSITE VIEW THIS CORNER

NOTE:
THE FOUR (4) FASTENERS FOR ATTACHING PARTITION PANELS TO INTERIOR COLUMNS ARE INSTALLED AT THE TOP, BOTTOM AND AT THE 1/3 POINTS NOT TO EXCEED A 3'-0" VERTICAL SPACING BETWEEN FASTENERS.

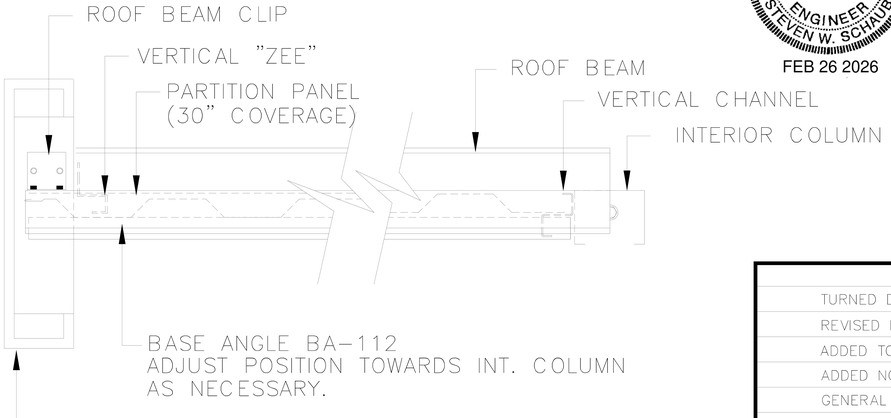

PLAN VIEW

NORTH CAROLINA PROFESSIONAL SEAL 029129 ENGINEER STEVEN W. SCHAUB
FEB 26 2026

REVISIONS	DATE	BY
TURNED DIRECTION OF MID TOP CHANNELS	3/17/4	JCM
REVISED INTERIOR COLUMNS	8/29/02	BAM
ADDED TOP CHANNEL AT PANELS OVER 9'-0"	2/7/02	BDL
ADDED NOTE FOR INTERIOR COLUMNS	3/30/01	TLR
GENERAL REVISIONS	5/6/99	CWM
GENERAL REVISIONS	6/23/98	CJG
REVISION 1	6/4/98	KLH

BETCO, INC.
BUILDING THE FUTURE OF SELF STORAGE
P.O. BOX 1650
STATESVILLE, NC 28687

SHEET TITLE: Partition - Endwall Column to Interior Column

DRAWN BY: J POPE	APPROVED BY:	DRAWING NUMBER:
SCALE: NTS	DATE: 6/17/94	ERC200X

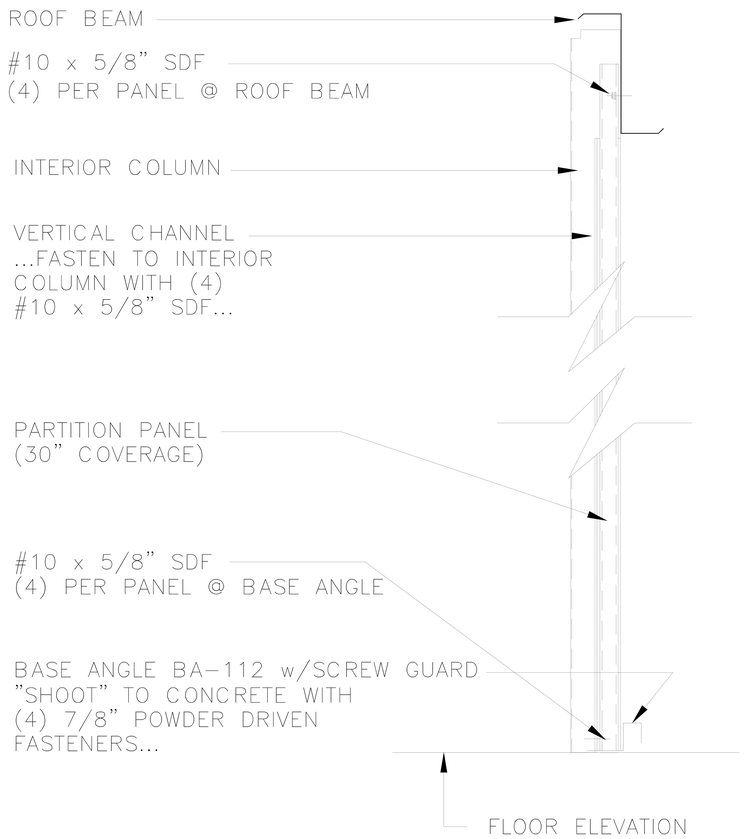

SECTION A-A

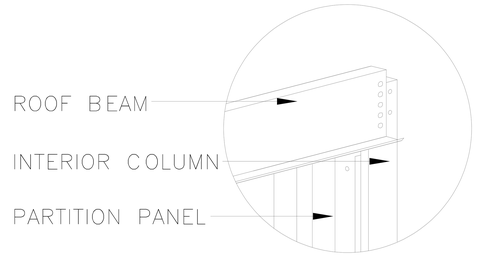

OPPOSITE VIEW
THIS CORNER

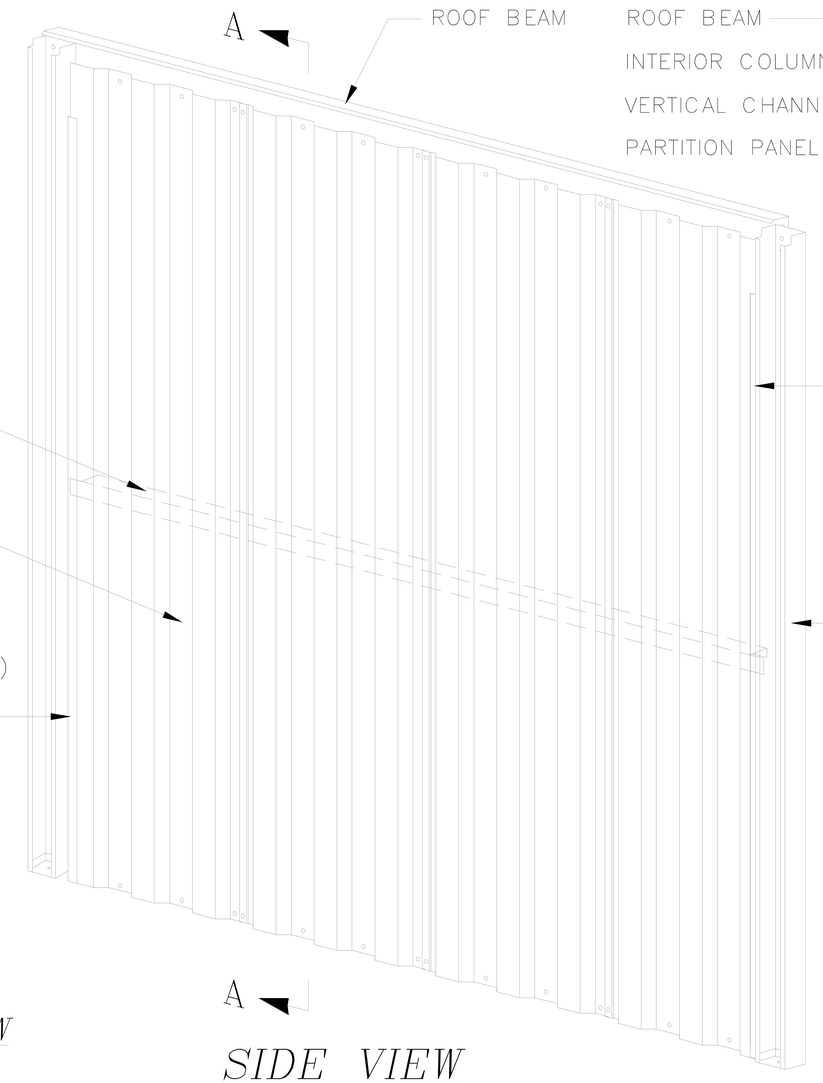

SIDE VIEW

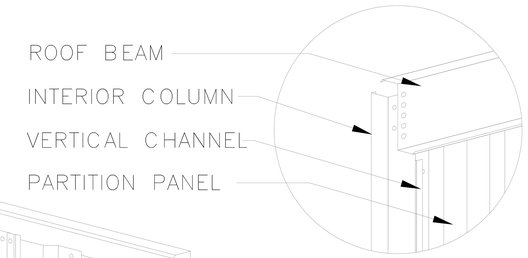

OPPOSITE VIEW
THIS CORNER

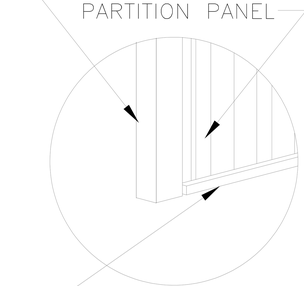

OPPOSITE VIEW
THIS CORNER

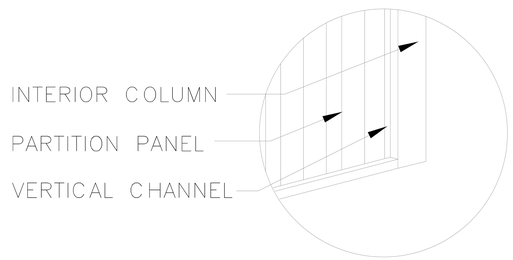

OPPOSITE VIEW
THIS CORNER

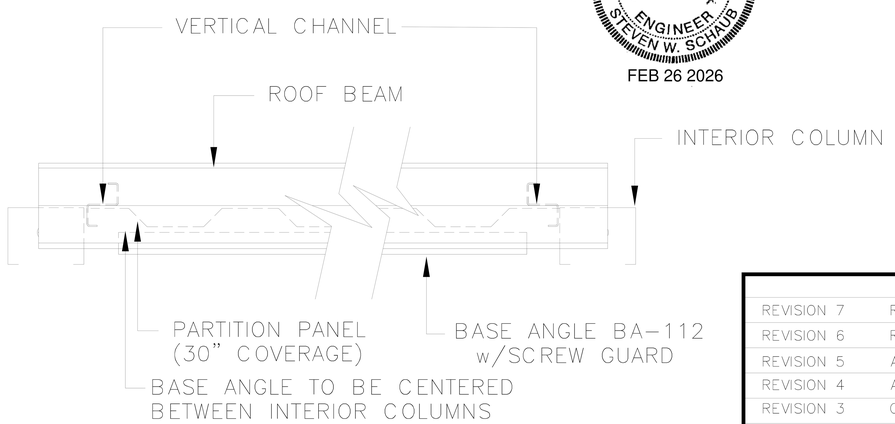

PLAN VIEW

NORTH CAROLINA PROFESSIONAL SEAL 029129 ENGINEER STEVEN W. SCHAUB
FEB 26 2026

NOTE:
THE FOUR (4) FASTENERS FOR ATTACHING PARTITION PANELS TO INTERIOR COLUMNS ARE INSTALLED AT THE TOP, BOTTOM AND AT THE 1/3 POINTS NOT TO EXCEED A 3'-0" VERTICAL SPACING BETWEEN FASTENERS.

REVISIONS		DATE	BY
REVISION 7	REVISED DIRECTION OF MID TOP CHANNEL	3/17/04	JCM
REVISION 6	REVISED INTERIOR COLUMNS	8/29/02	BAM
REVISION 5	ADDED TOP CHANNEL AT PANELS OVER 9'-0"	2/7/02	BDL
REVISION 4	ADDED NOTE FOR INTERIOR COLUMNS	3/30/01	TLR
REVISION 3	GENERAL REVISIONS	3-24-99	FOX
REVISION 2	CORRECT VC	6/23/98	CJG
REVISION 1		6/4/98	KLH

BETCO, INC.
BUILDING THE FUTURE OF SELF STORAGE
P.O. BOX 1650
STATESVILLE, NC 28687

SHEET TITLE:
Partition - Interior Column to Interior Column

DRAWN BY:	APPROVED BY:	DRAWING NUMBER:
J Pope		ERC201X
SCALE: NTS	DATE: 6/20/94	

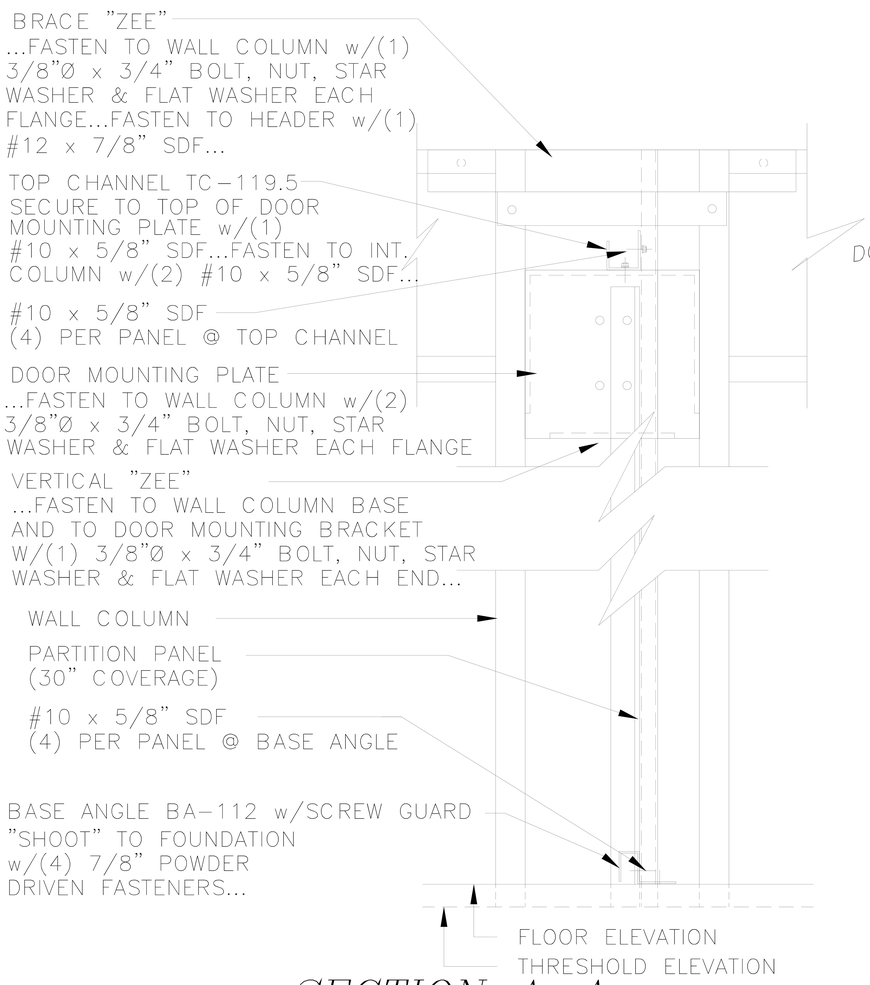

SECTION A-A

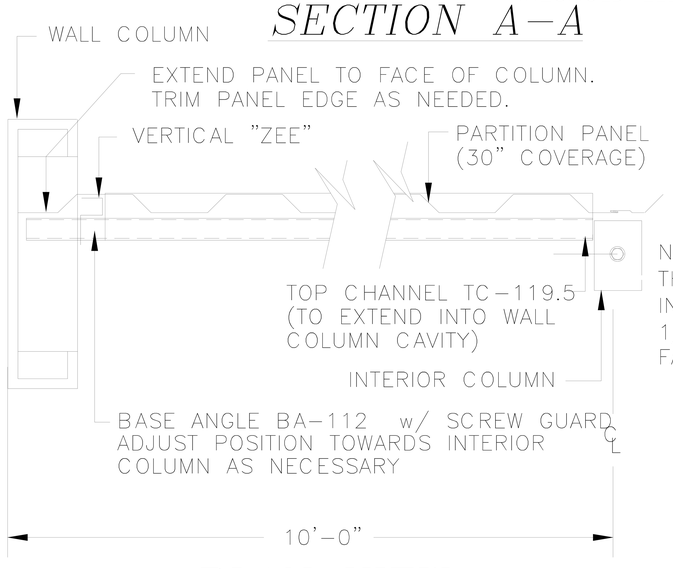

PLAN VIEW

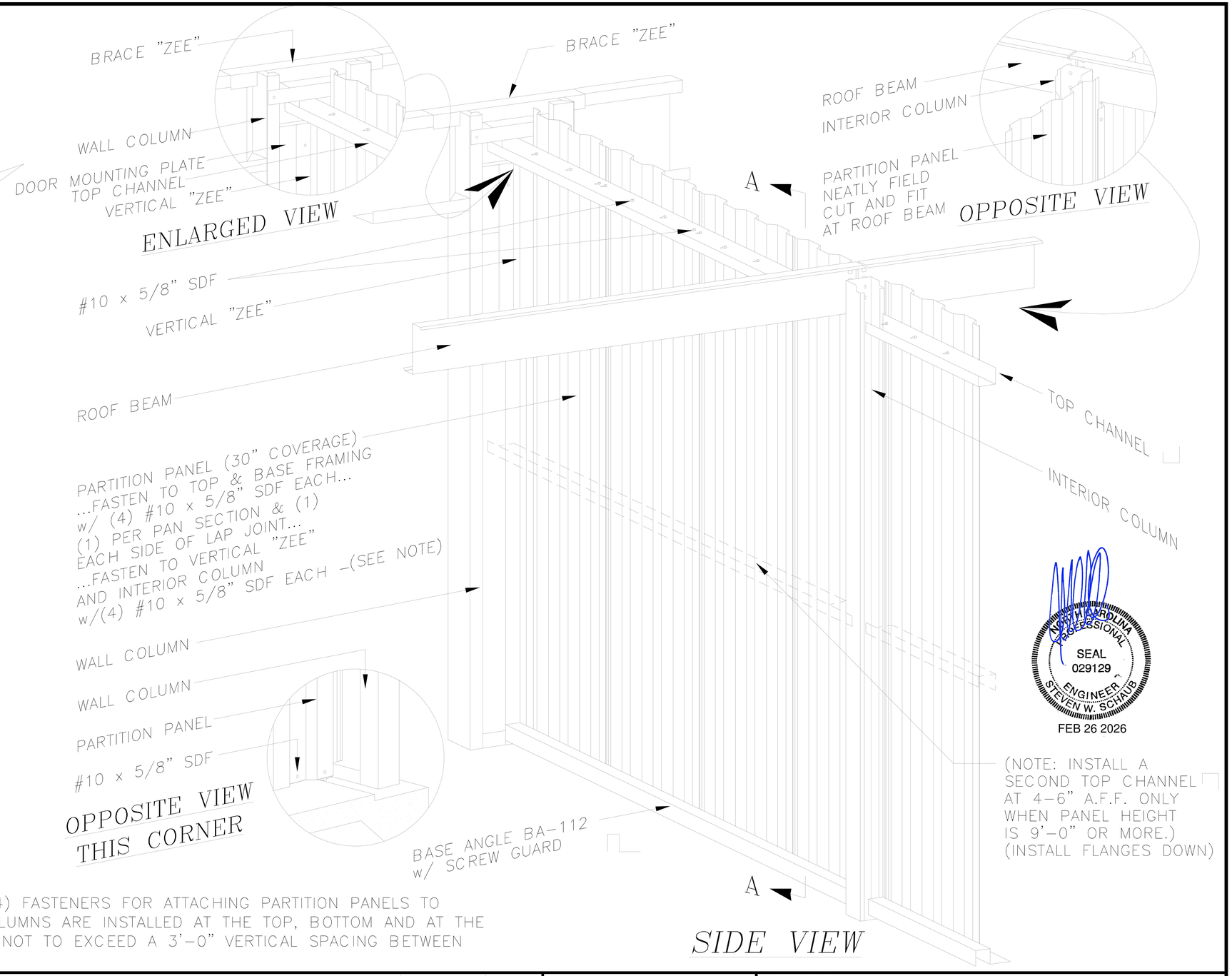

SIDE VIEW

NOTE:
THE FOUR (4) FASTENERS FOR ATTACHING PARTITION PANELS TO INTERIOR COLUMNS ARE INSTALLED AT THE TOP, BOTTOM AND AT THE 1/3 POINTS NOT TO EXCEED A 3'-0" VERTICAL SPACING BETWEEN FASTENERS.

NORTH CAROLINA PROFESSIONAL SEAL 029129 ENGINEER STEVEN W. SCHAUB
FEB 26 2026

REVISIONS	DATE	BY
REVISED DIRECTION OF MID TOP CHANNEL	3/17/04	JCM
REVISED INTERIOR COLUMNS	8/29/02	BAM
ADDED TOP CHANNEL AT PANELS OVER 9'-0"	2/7/02	BDL
ADDED NOTE FOR INTERIOR COLUMNS	4/2/01	TLR
GENERAL REVISIONS	4/12/99	CWM

BETCO, INC.
BUILDING THE FUTURE OF SELF STORAGE
P.O. BOX 1650
STATESVILLE, NC 28687

SHEET TITLE: Partition - Sidewall Column to Interior Column - 10' span

DRAWN BY: J Pope	APPROVED BY:	DRAWING NUMBER:
SCALE: NTS	DATE: 6/20/94	ERC202X

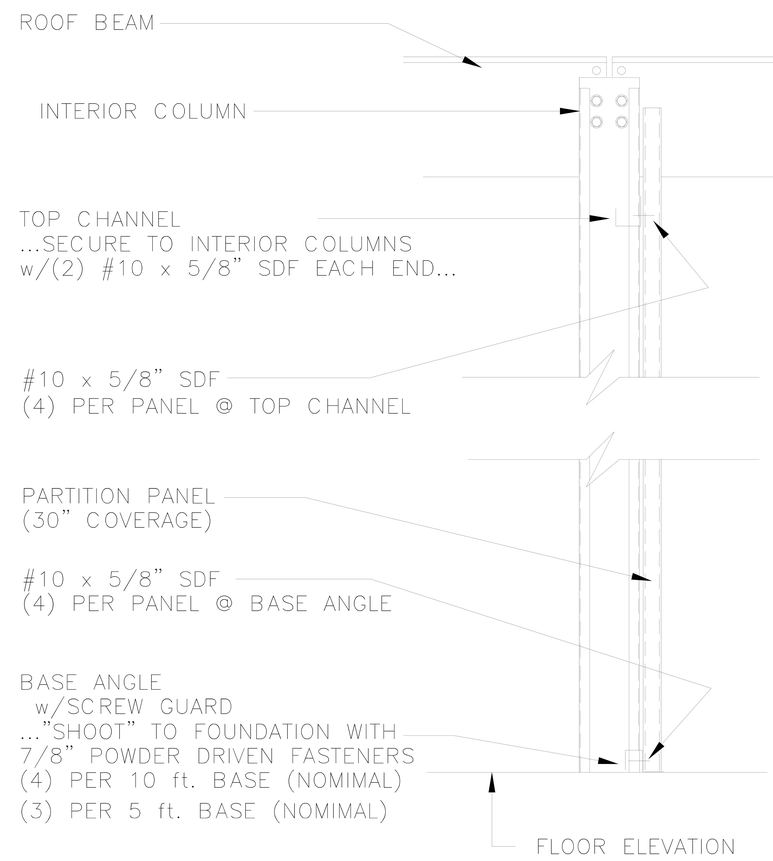

SECTION A–A

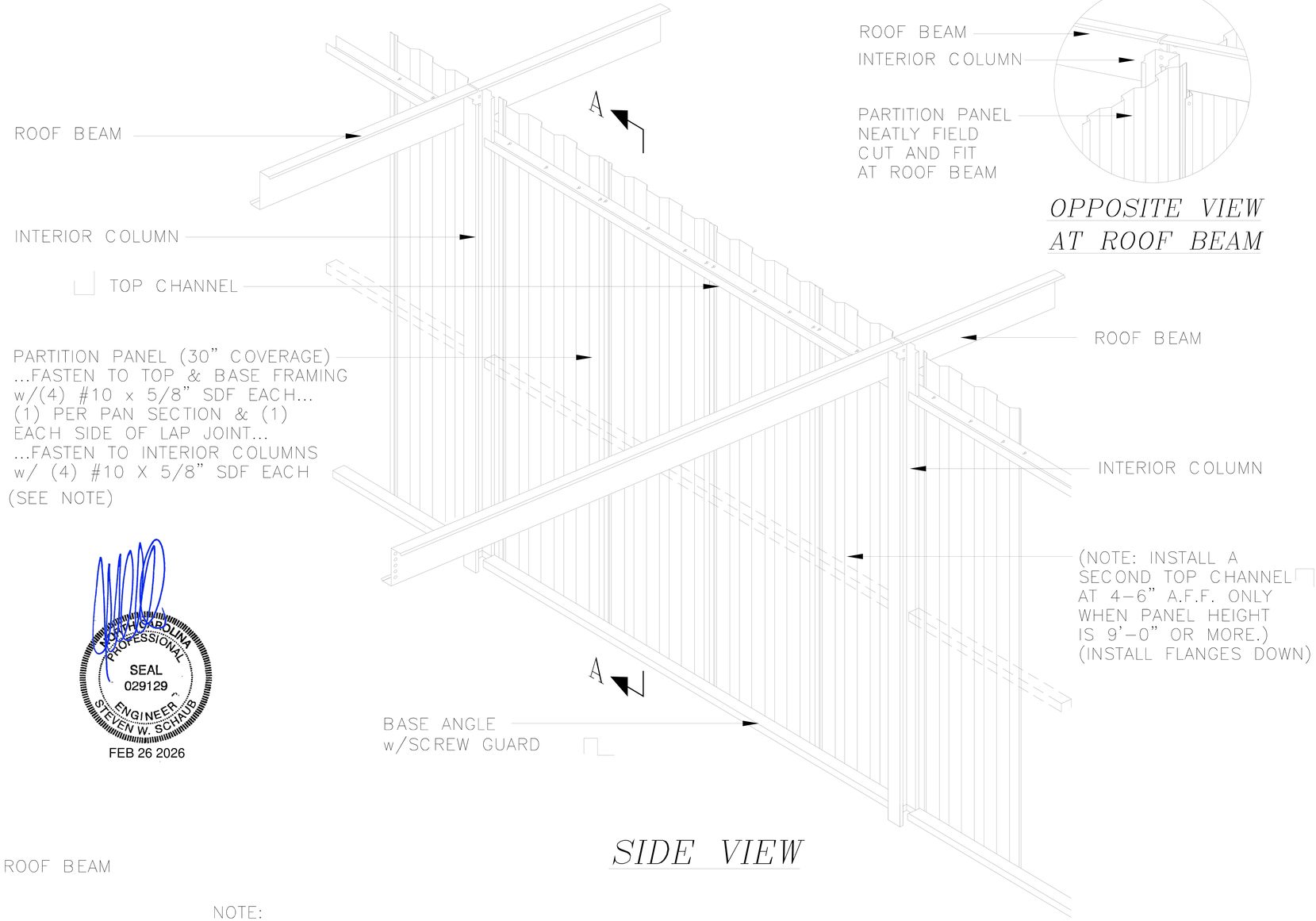

SIDE VIEW

OPPOSITE VIEW
AT ROOF BEAM

NORTH CAROLINA PROFESSIONAL SEAL 029129 ENGINEER STEVEN W. SCHAUB
FEB 26 2026

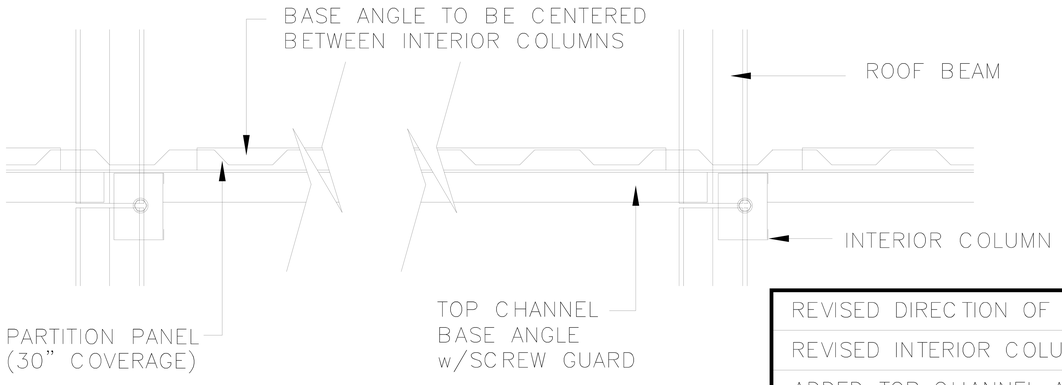

PLAN VIEW

NOTE:
THE FOUR (4) FASTENERS FOR ATTACHING PARTITION PANELS TO INTERIOR COLUMNS ARE INSTALLED AT THE TOP, BOTTOM AND AT THE 1/3 POINTS NOT TO EXCEED A 3'–0" VERTICAL SPACING BETWEEN FASTENERS.

REVISIONS	DATE	BY
REVISED DIRECTION OF MID TOP CHANNEL	3/17/04	JCM
REVISED INTERIOR COLUMNS	8/29/02	BAM
ADDED TOP CHANNEL AT PANELS OVER 9'–0"	2/7/02	BDL
ADDED NOTE FOR INTERIOR COLUMNS	4/2/01	TLR
GENERAL REVISIONS	5/7/99	CJG

BETCO, INC.
BUILDING THE FUTURE OF SELF STORAGE
P.O. BOX 1650
STATESVILLE, NC 28687

SHEET TITLE:
Partition – Interior Column to Interior Column (all eave heights)

DRAWN BY:	APPROVED BY:	DRAWING NUMBER:
J POPE		ERC203X
SCALE: NTS	DATE: 6/22/98	

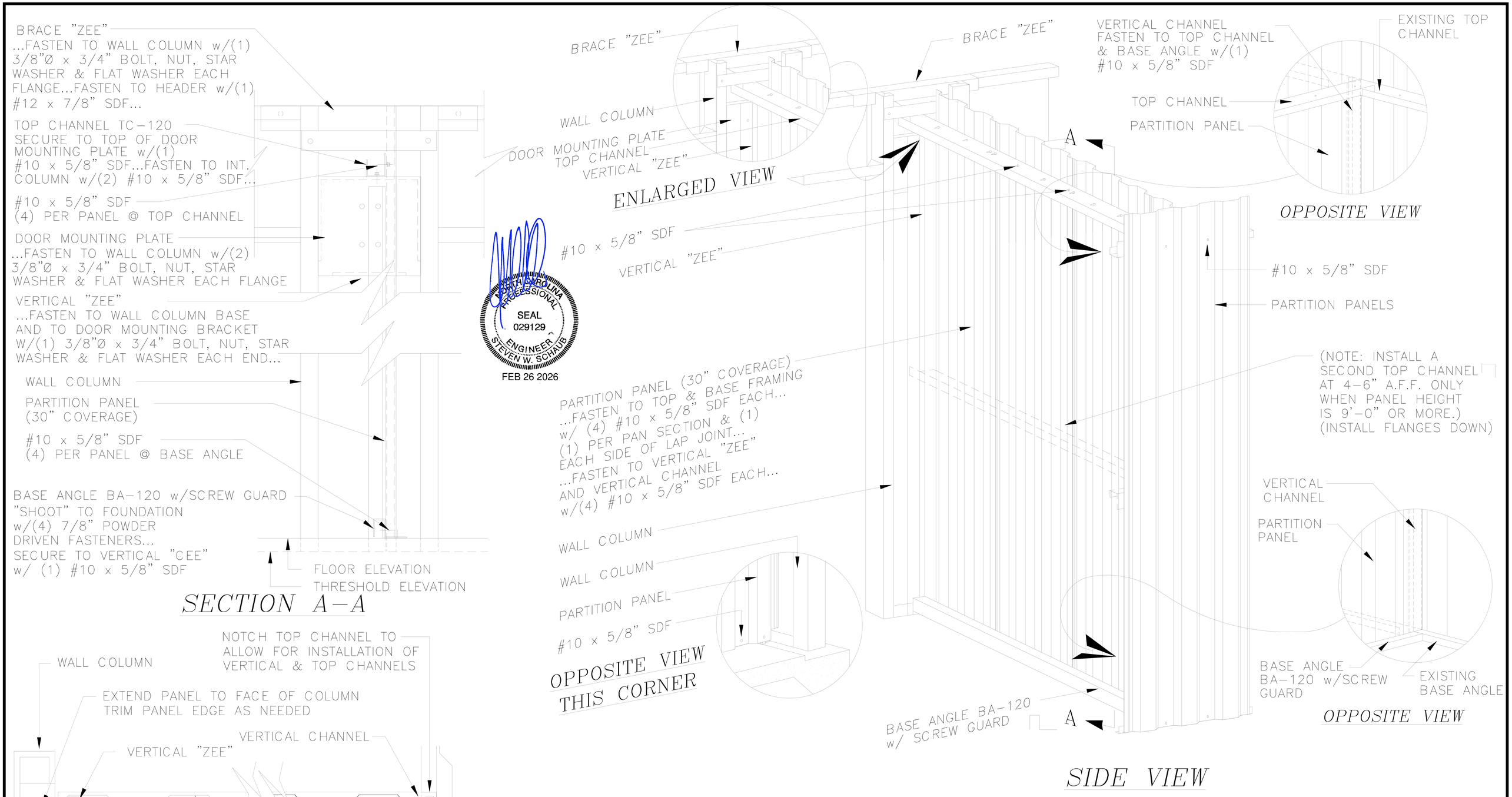

NORTH CAROLINA PROFESSIONAL SEAL 029129 ENGINEER STEVEN W. SCHAUB
FEB 26 2026

REVISIONS	DATE	BY
REVISED DIRECTION OF MID HAT CHANNEL	3/17/04	JCM
REVISED FASTENER NOTE	8/30/02	JCM
ADDED TOP CHANNEL AT PANELS OVER 9'-0"	2/7/02	BDL
GENERAL REVISIONS	4/2/01	TLR
GENERAL REVISIONS	5/6/99	CWM
GENERAL REVISIONS	6/23/98	CJG

BETCO, INC.
BUILDING THE FUTURE OF SELF STORAGE
P.O. BOX 1650
STATESVILLE, NC 28687

SHEET TITLE: Partition - Endwall Column to Interior Partition

DRAWN BY: J Pope	APPROVED BY:	DRAWING NUMBER:
SCALE: NTS	DATE: 6/24/94	ERC207X

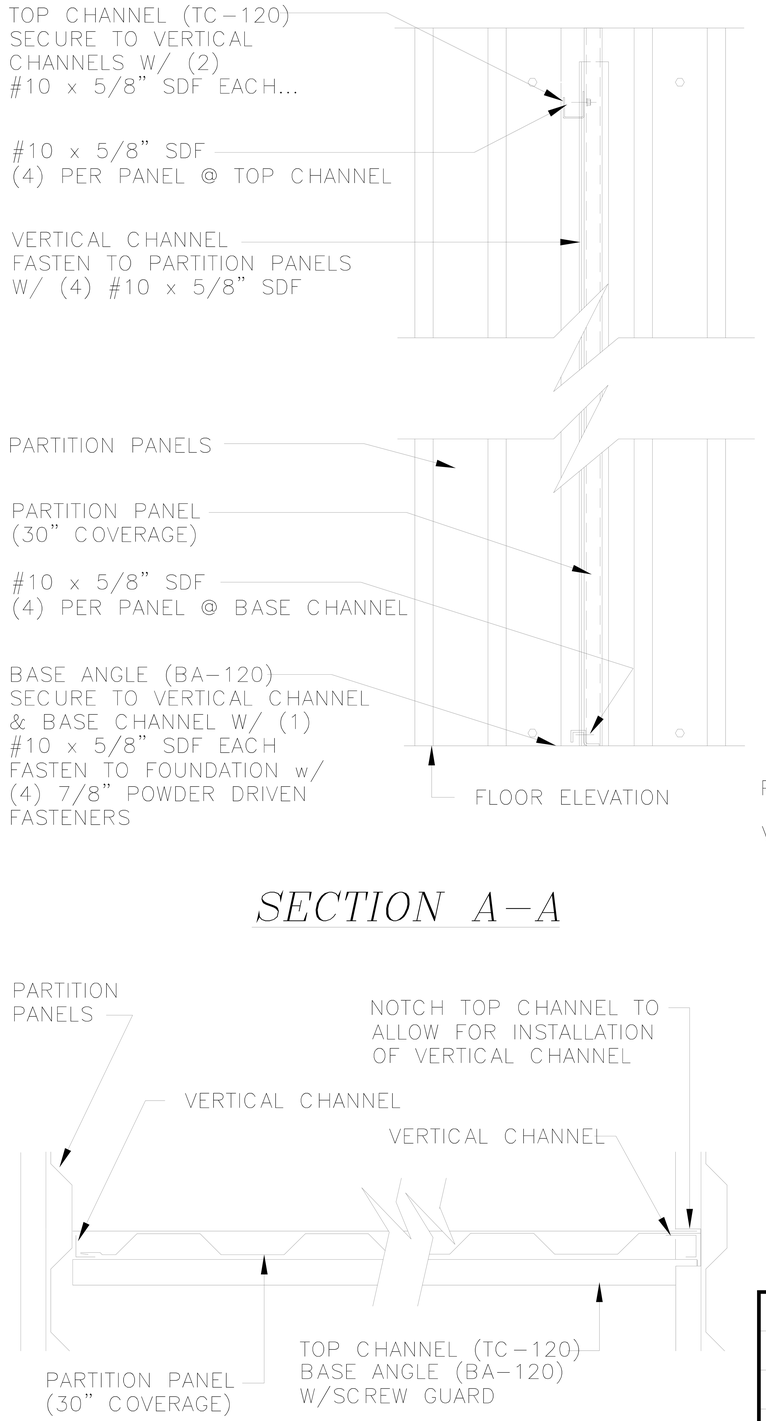

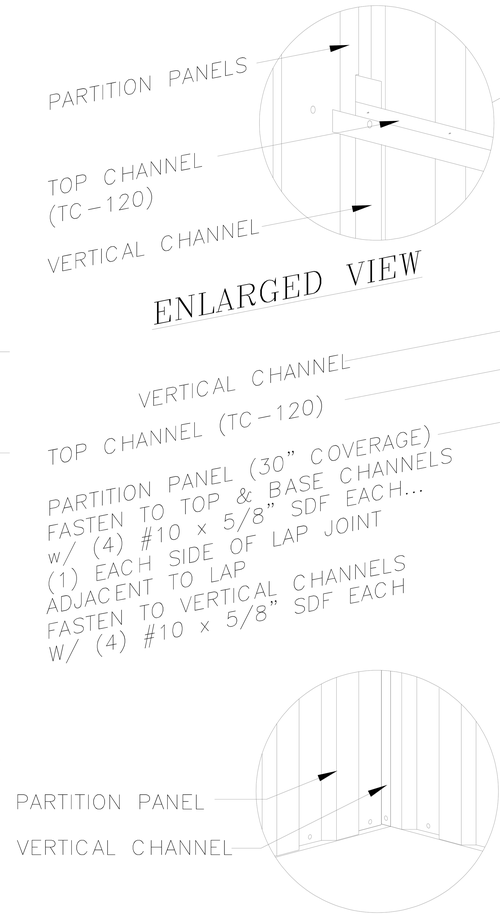

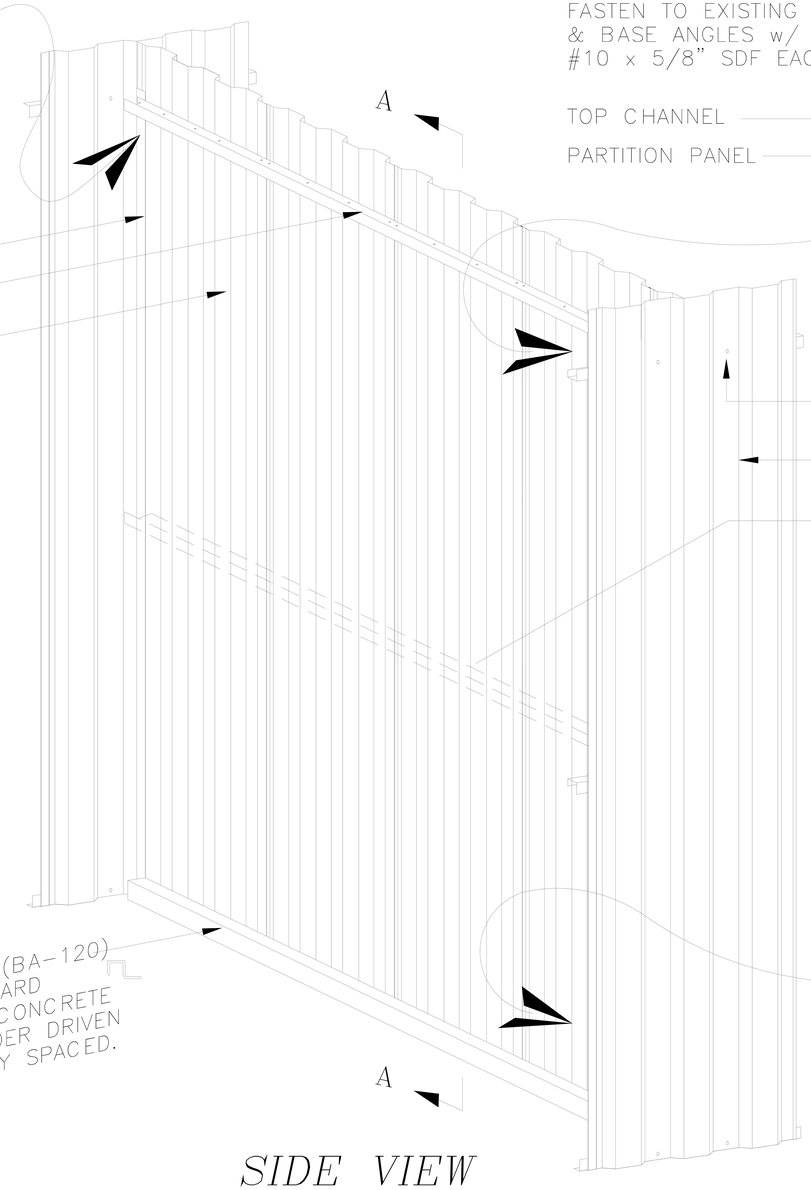

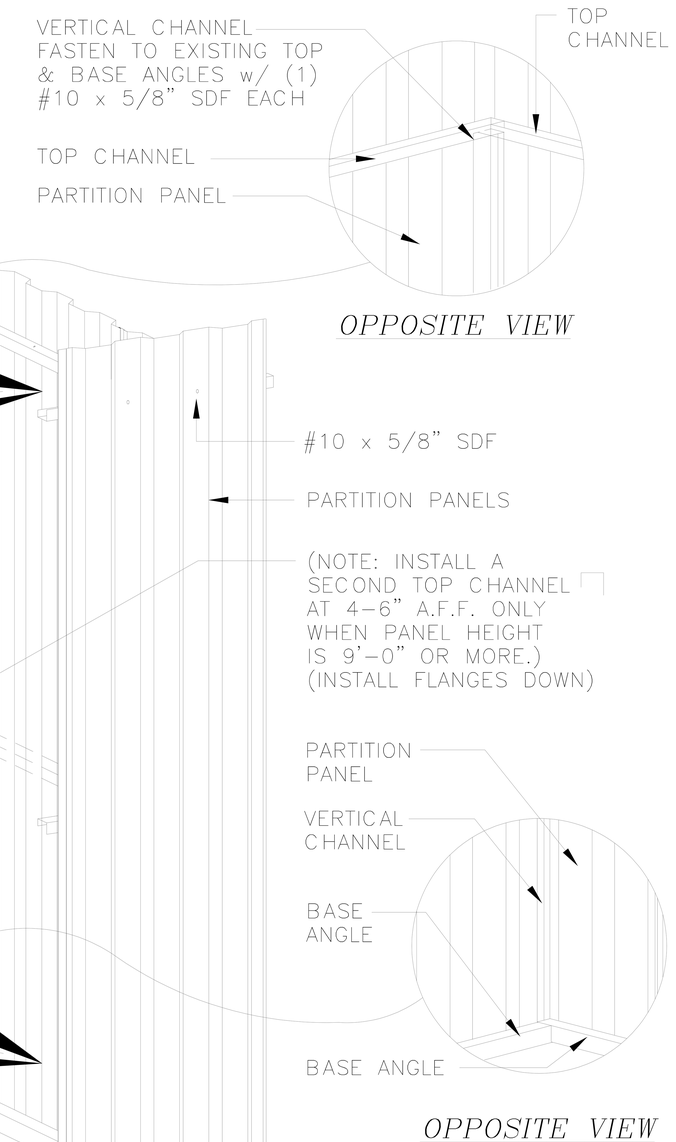

NORTH CAROLINA PROFESSIONAL SEAL 029129 ENGINEER STEVEN W. SCHAUB
FEB 26 2026

REVISIONS	DATE	BY
REVISED DIRECTION OF MID TOP CHANNEL	3/17/04	JCM
ADDED TOP CHANNEL AT PANELS OVER 9'-0"	2/7/02	BDL

BETCO
P.O. BOX 1650
STATESVILLE, NC 28687

SHEET TITLE: Partition - Interior Partition to Interior Partition

DRAWN BY: J Pope	APPROVED BY:	DRAWING NUMBER: ERC208X
SCALE: NTS	DATE: 6/24/94	

DOOR SCHEDULE

DOOR NUMBER	WIDTH	HEIGHT	DOOR THICK	DOOR TYPE	HARDWARE DESCRIPTION	REMARKS
3068	3'-0"	6'-8"	1 3/4"	1	LEVER/LEVER LOCKSET	SELF LATCHING WITH CLOSER & THRESHOLD
3668	3'-6"	6'-8"	1 3/4"	1	LEVER/LEVER LOCKSET	SELF LATCHING WITH CLOSER & THRESHOLD
4068	4'-0"	6'-8"	1 3/4"	1	LEVER/LEVER LOCKSET	SELF LATCHING WITH CLOSER & THRESHOLD
3068	3'-0"	6'-8"	1 3/4"	2	LEVER/LEVER LOCKSET	SELF LATCHING WITH CLOSER & THRESHOLD
3668	3'-6"	6'-8"	1 3/4"	2	LEVER/LEVER LOCKSET	SELF LATCHING WITH CLOSER & THRESHOLD
4068	4'-0"	6'-8"	1 3/4"	2	LEVER/LEVER LOCKSET	SELF LATCHING WITH CLOSER & THRESHOLD
3070	3'-0"	7'-0"	1 3/4"	1	LEVER/LEVER LOCKSET	SELF LATCHING WITH CLOSER & THRESHOLD
3670	3'-6"	7'-0"	1 3/4"	1	LEVER/LEVER LOCKSET	SELF LATCHING WITH CLOSER & THRESHOLD
4070	4'-0"	7'-0"	1 3/4"	1	LEVER/LEVER LOCKSET	SELF LATCHING WITH CLOSER & THRESHOLD
3070	3'-0"	7'-0"	1 3/4"	2	LEVER/LEVER LOCKSET	SELF LATCHING WITH CLOSER & THRESHOLD
3670	3'-6"	7'-0"	1 3/4"	2	LEVER/LEVER LOCKSET	SELF LATCHING WITH CLOSER & THRESHOLD
4070	4'-0"	7'-0"	1 3/4"	2	LEVER/LEVER LOCKSET	SELF LATCHING WITH CLOSER & THRESHOLD

DOOR TYPE (SEE DOOR OPTIONS)

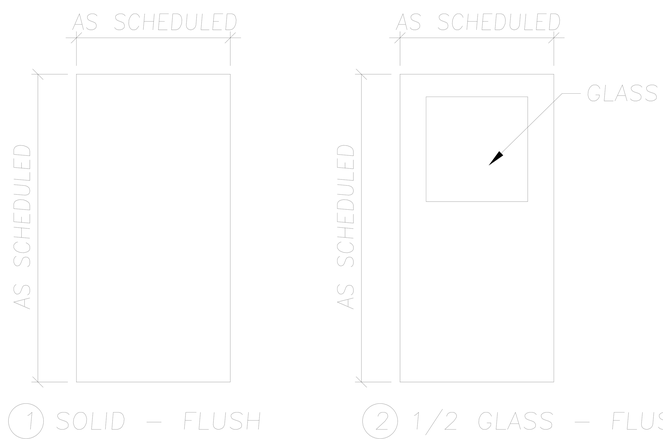

DOOR OPTIONS

OPTIONS
L - LOUVER (12" x 12")
FL - RATED LOUVER (12" x 12")
P - PANIC HARDWARE
K - KICKPLATE
PP - PUSH PLATE/PULL PLATE
G - 20 x 24 INSULATED 1" THERMOPLANE INSERT
FG - 10 x 10 UL APPROVED GLASS INSERT
A - FOUR HOUR RATED
B - ONE HOUR RATED

	DOOR NUMBER		DOOR TYPE		OPTIONS
EXAMPLE:	3068	-	2	-	L,K,P,G

THIS IS A 3'-0" x 6'-8" - 1/2 GLASS PERSONNEL DOOR WITH 20 x 24 GLASS, LOUVER, KICKPLATE AND PANIC HARDWARE.

REVISIONS	DATE	BY
REVISED DUE TO DOOR HEIGHT CHANGE	4/7/05	BDL

BETCO
P.O. BOX 1650
STATESVILLE, NC 28687

SHEET TITLE: Standard Swing Door Hardware Schedule

DRAWN BY: JRB
APPROVED BY:
DRAWING NUMBER: ERC254X
SCALE: NTS
DATE: 3/7/01

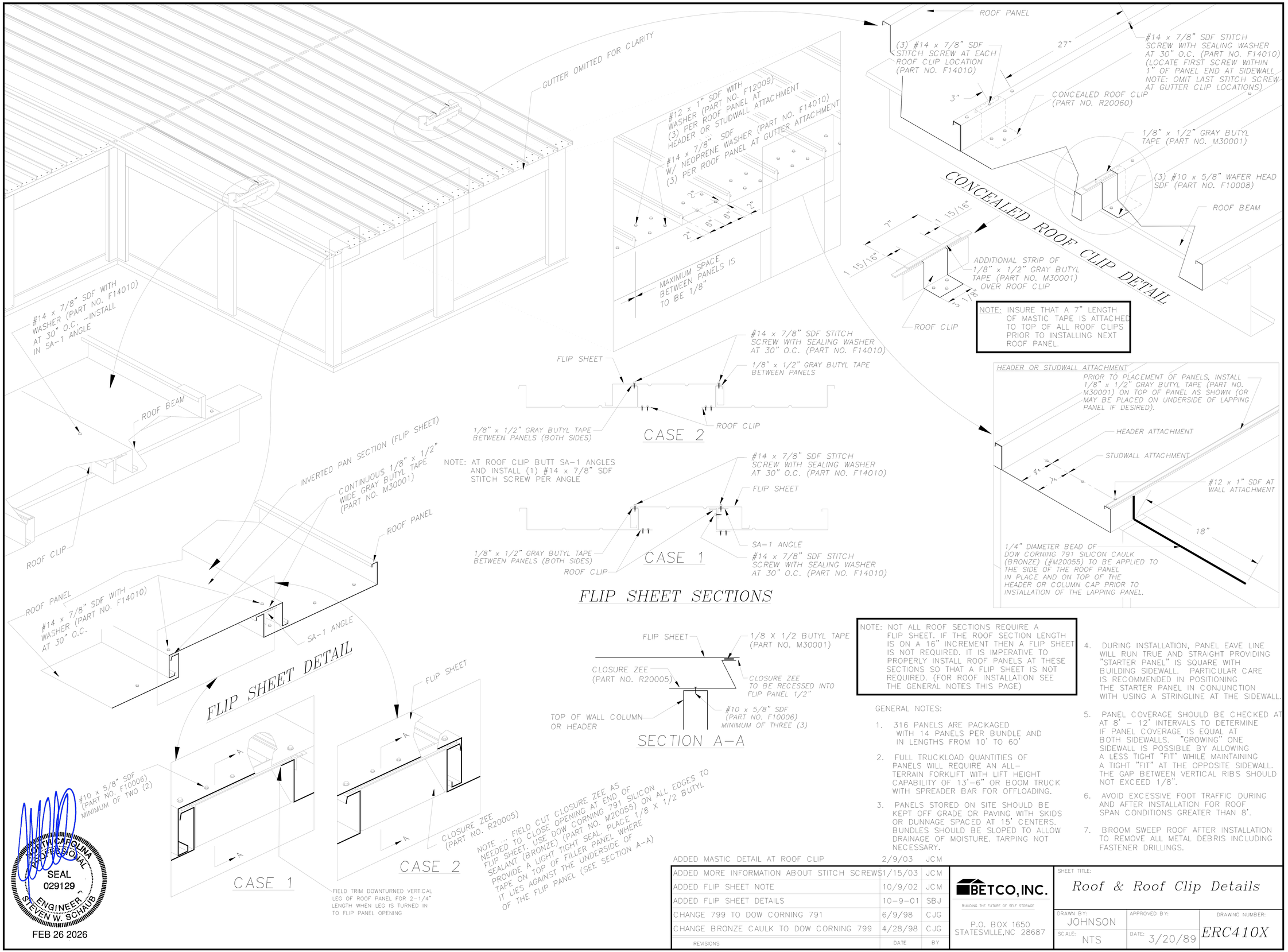

REVISIONS	DATE	BY
ADDED MASTIC DETAIL AT ROOF CLIP	2/9/03	JCM
ADDED MORE INFORMATION ABOUT STITCH SCREWS	1/15/03	JCM
ADDED FLIP SHEET NOTE	10/9/02	JCM
ADDED FLIP SHEET DETAILS	10-9-01	SBJ
CHANGE 799 TO DOW CORNING 791	6/9/98	CJG
CHANGE BRONZE CAULK TO DOW CORNING 799	4/28/98	CJG

BETCO, INC.
BUILDING THE FUTURE OF SELF STORAGE
P.O. BOX 1650
STATESVILLE, NC 28687

SHEET TITLE: Roof & Roof Clip Details

DRAWN BY:	APPROVED BY:	DRAWING NUMBER:
JOHNSON		ERC410X
SCALE: NTS	DATE: 3/20/89	

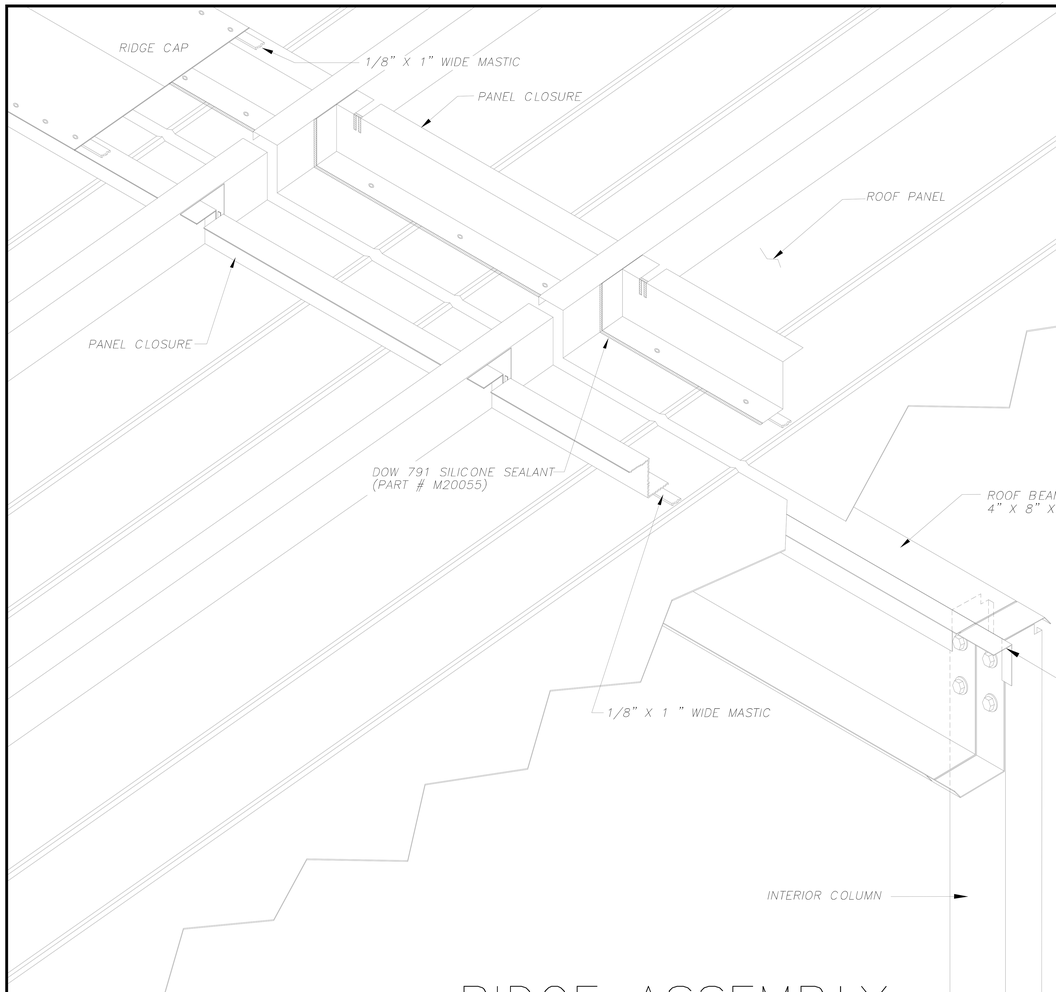

RIDGE ASSEMBLY

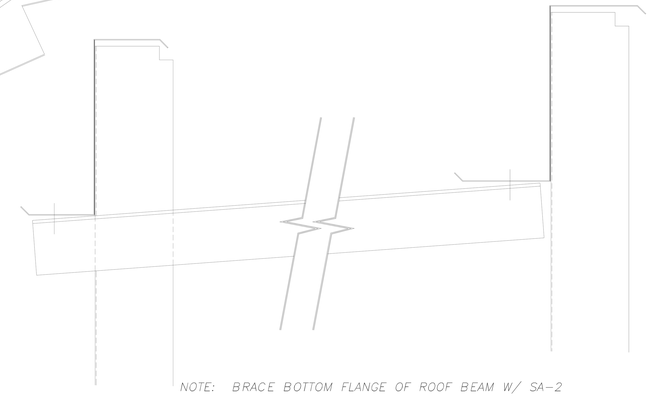

NOTE: BRACE BOTTOM FLANGE OF ROOF BEAM W/ SA-2 PRIOR TO INSTALLING ROOF, TO KEEP BEAM FROM TWISTING. BRACE CAN BE REMOVED AFTER ROOF IS INSTALLED.

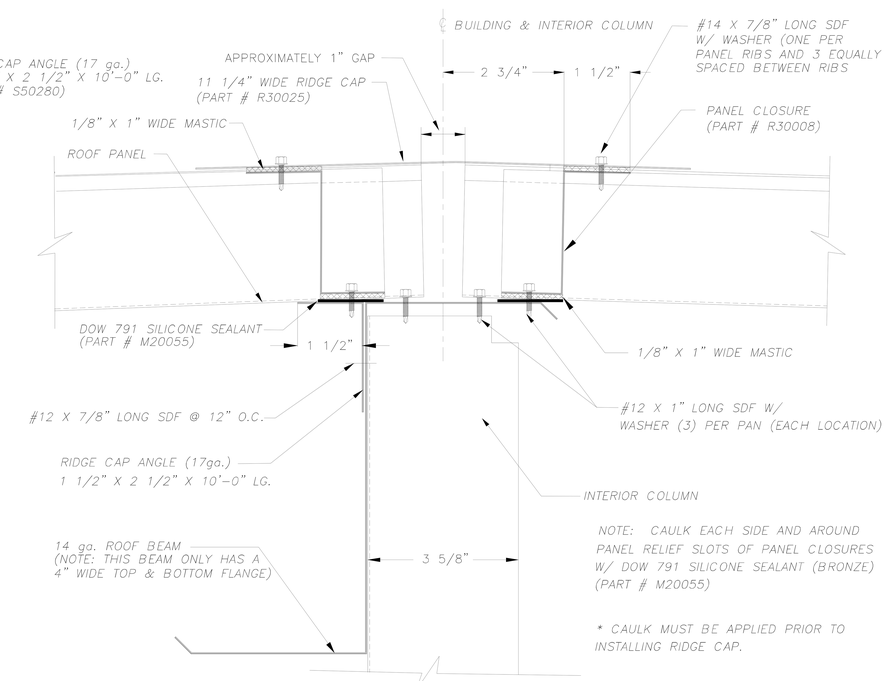

NOTE: CAULK EACH SIDE AND AROUND PANEL RELIEF SLOTS OF PANEL CLOSURES W/ DOW 791 SILICONE SEALANT (BRONZE) (PART # M20055)

* CAULK MUST BE APPLIED PRIOR TO INSTALLING RIDGE CAP.

SECTION @ RIDGE CAP

NORTH CAROLINA PROFESSIONAL SEAL 029129 ENGINEER STEVEN W. SCHAUB

FEB 26 2026

REVISIONS	DATE	BY
ADDED SCREWS FOR CLARITY	1/16/04	JCM
REVISED INTERIOR COLUMN SIZE	8/30/02	JCM
GENERAL REVISIONS	3/29/00	BDL
CHANGED FROM CLEAR TO BRONZE SEALANT	8/11/98	JHP
REVISED SECTION @ RIDGE CAP	7/14/98	JHP

BETCO
P.O. BOX 1650
STATESVILLE, NC 28687

SHEET TITLE: RIDGE CAP ASSEMBLY

DRAWN BY: JHP
APPROVED BY:
DRAWING NUMBER: ERC420X
SCALE: NTS
DATE: 12/17/96

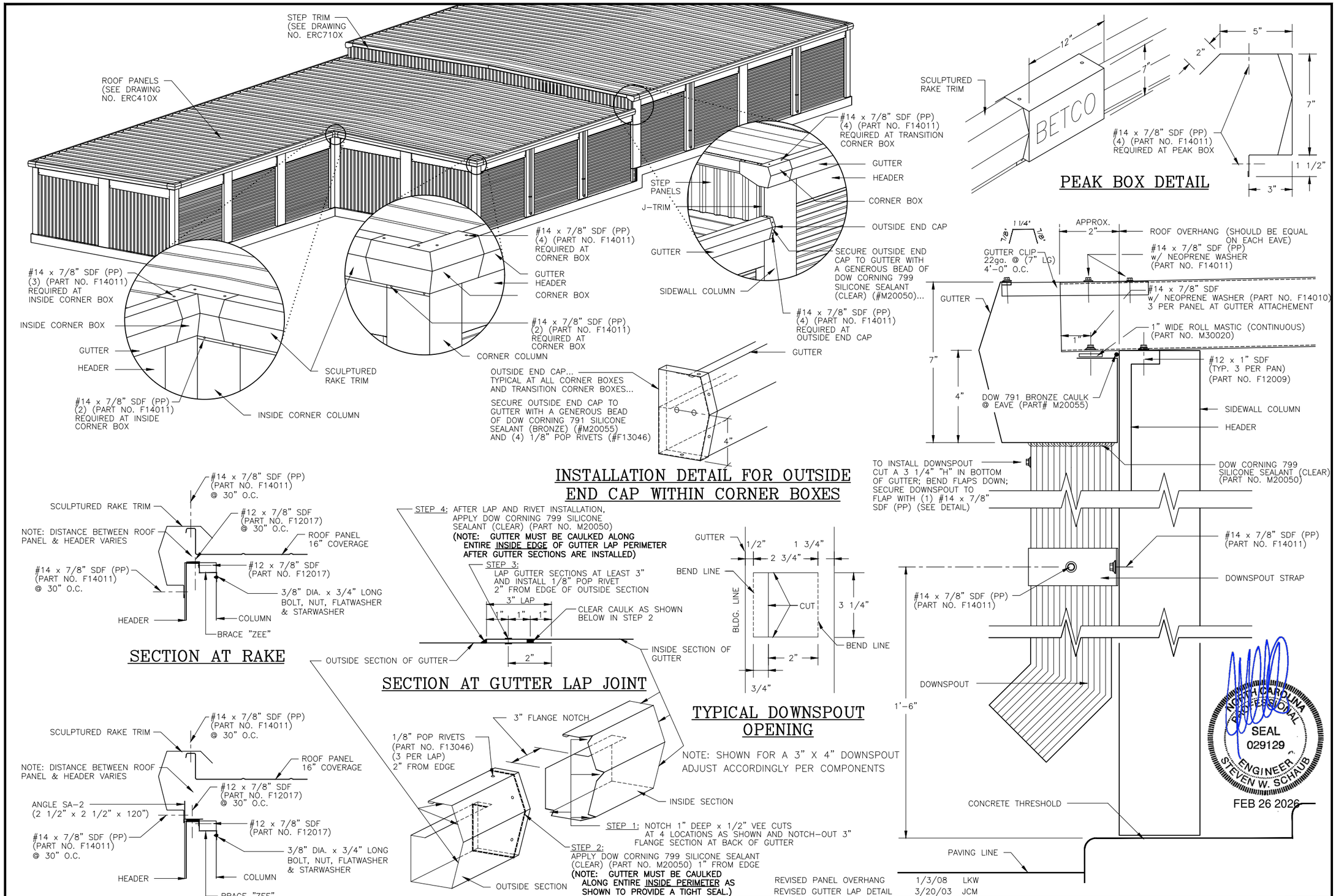

REVISIONS	DATE	BY
REVISED PANEL OVERHANG	1/3/08	LKW
REVISED GUTTER LAP DETAIL	3/20/03	JCM
REVISED FASTENER SIZE	1/15/03	JCM
REVISED GUTTER JOINT DETAIL	10/9/02	JCM
CHANGED INSIDE END CAP TO OUTSIDE END CAP	12/13/00	BDL
REVISED DOWNSPOUTS	07/10/00	JCM
GENERAL REVISIONS	03/19/99	FOX

BETCO
228 COMMERCE BLVD.
STATESVILLE, NC 28625
(800)654-7813

SHEET TITLE: *Sculptured Rake Trim, Extended Gutters and Downspouts*

DRAWN BY:	APPROVED BY:	DRAWING NUMBER:
CJG		ERC505X
SCALE: NTS	DATE: 4/7/98	

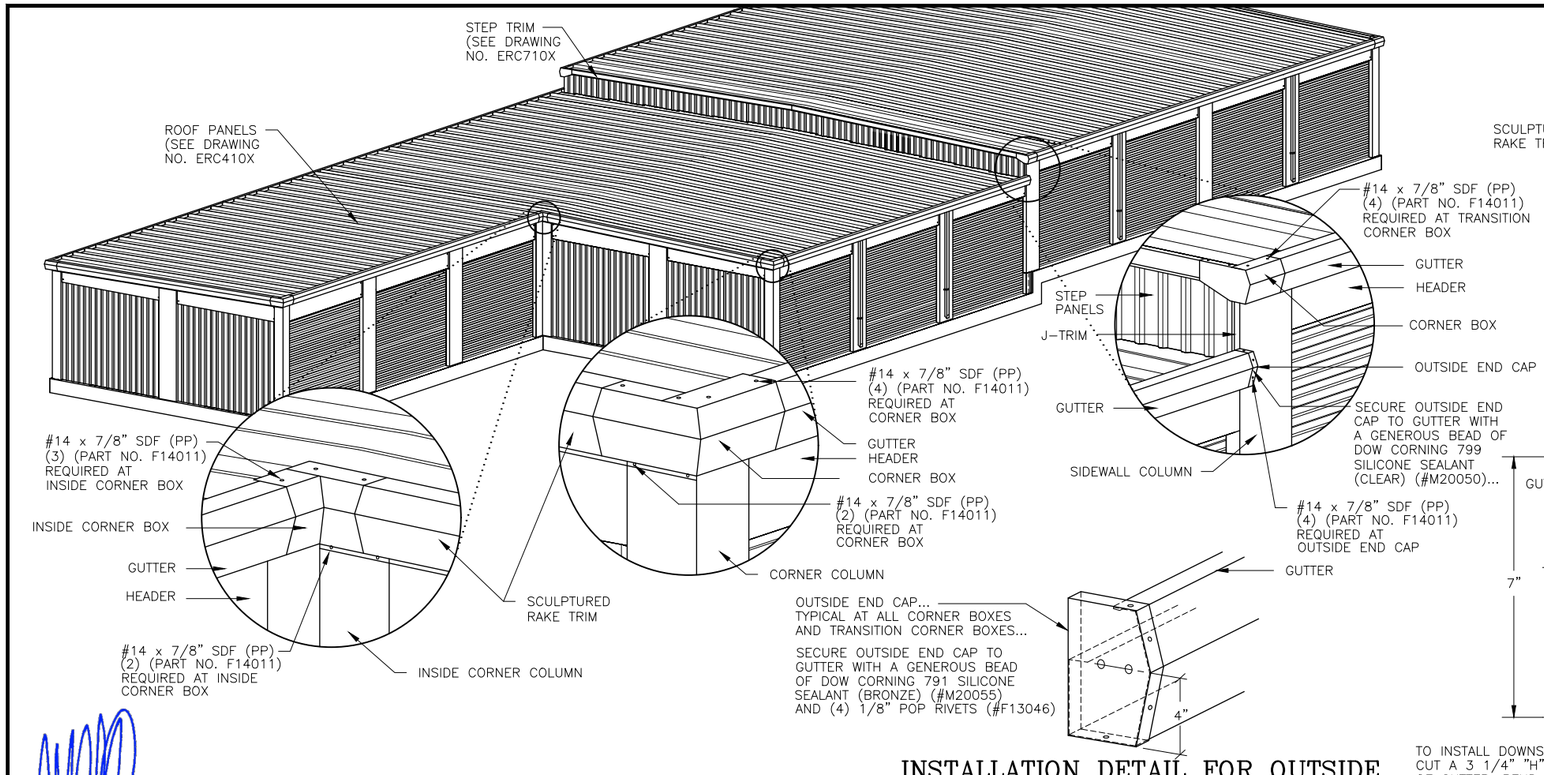

INSTALLATION DETAIL FOR OUTSIDE END CAP WITHIN CORNER BOXES

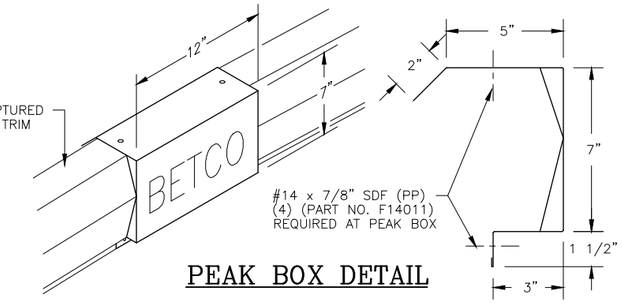

PEAK BOX DETAIL

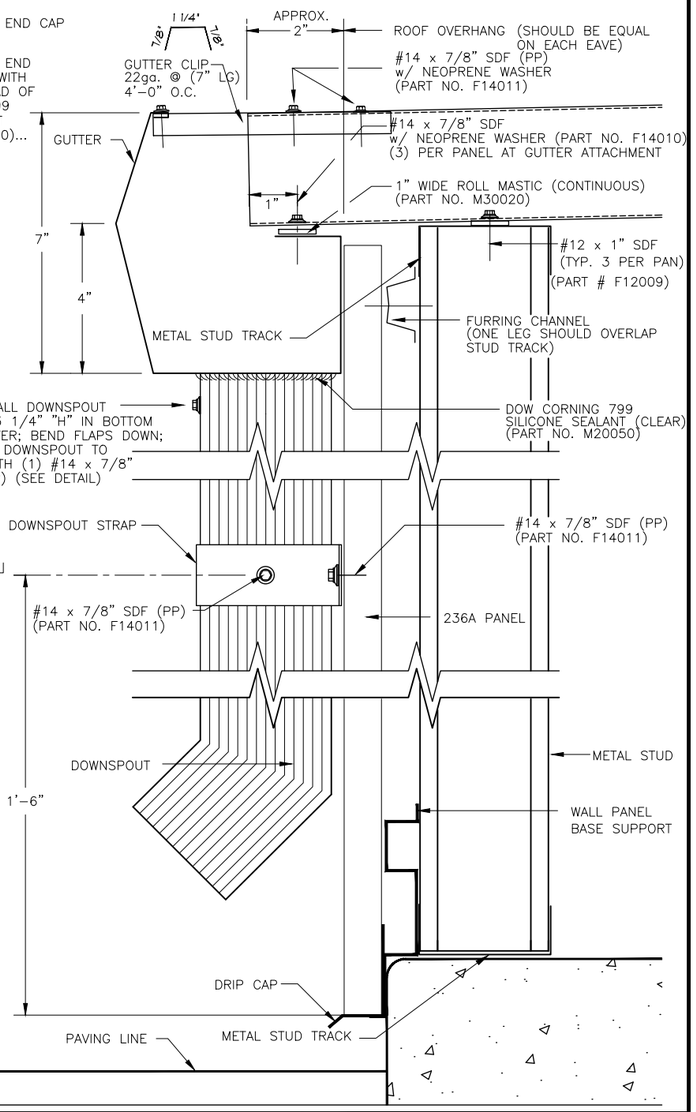

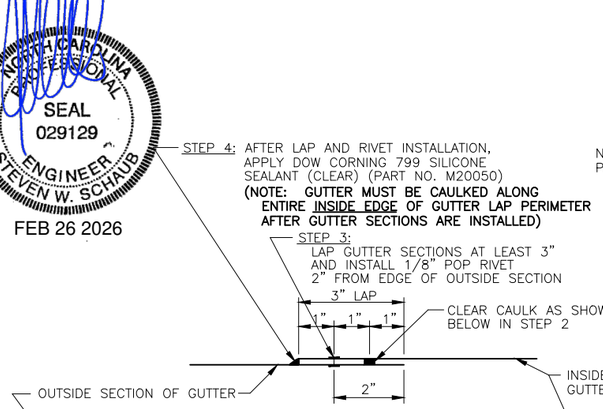

SECTION AT GUTTER LAP JOINT

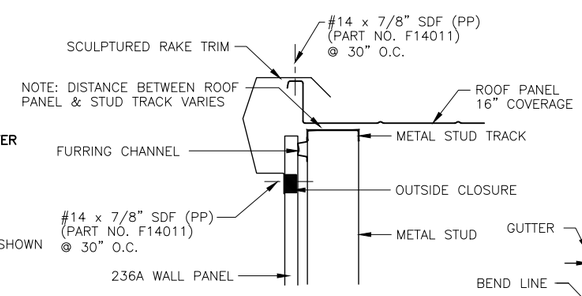

SECTION AT RAKE AT STUDWALL

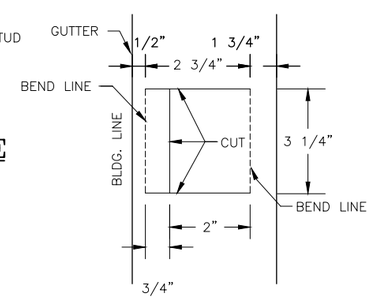

TYPICAL DOWNSPOUT OPENING

NOTE: SHOWN FOR A 3" X 4" DOWNSPOUT
ADJUST ACCORDINGLY PER COMPONENTS

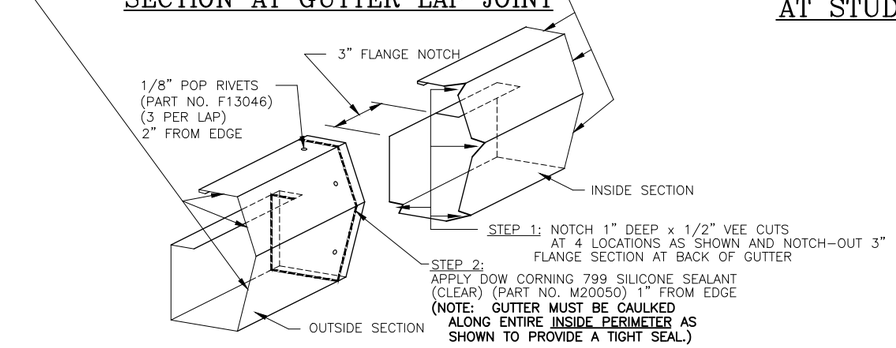

TYPICAL GUTTER LAP JOINT

NORTH CAROLINA PROFESSIONAL SEAL 029129 ENGINEER STEVEN W. SCHAUB
FEB 26 2026

REVISIONS	DATE	BY
REVISED PANEL OVERHANG	1/3/08	LKW
ADDED RAKE AT STUDWALL DETAIL	1/16/04	JCM
REVISED GUTTER LAP DETAIL	3/20/03	JCM
REVISED FASTENER SIZE	1/15/03	JCM
REVISED GUTTER JOINT DETAIL	10/8/02	JCM
REVISED STUDWALL NOTES	8/29/02	BAM
CHANGED INSIDE END CAP TO OUTSIDE END CAP	12/13/00	BDL

BETCO
228 COMMERCE BLVD.
STATESVILLE, NC 28625
(800)654-7813

SHEET TITLE: *Sculptured Rake Trim, Extended Gutters and Downspouts at Studwall*

DRAWN BY:	APPROVED BY:	DRAWING NUMBER:
CJG		ERC506X
SCALE: NTS	DATE: 4/7/98	

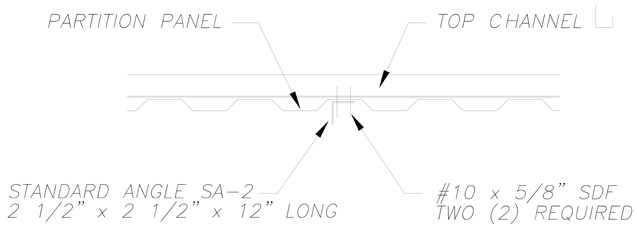

PLAN VIEW

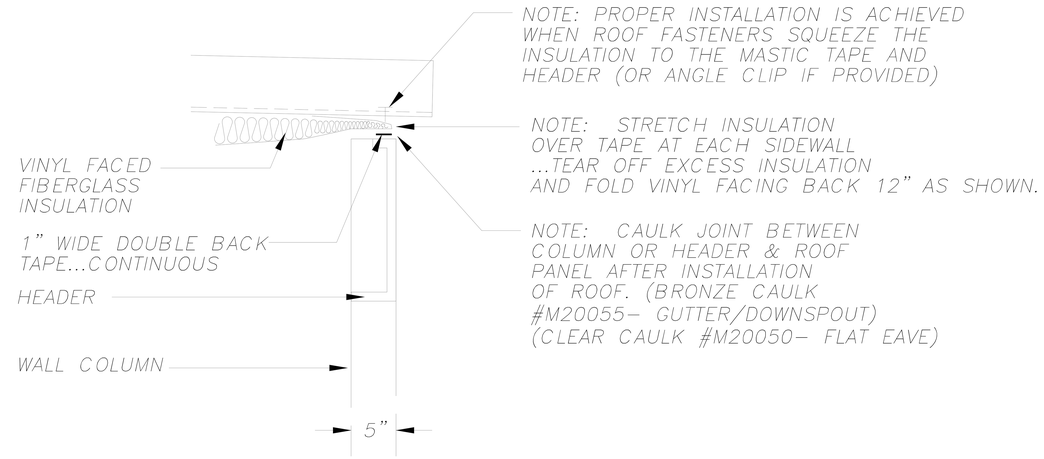

INSULATION INSTALLATION @ SIDEWALL

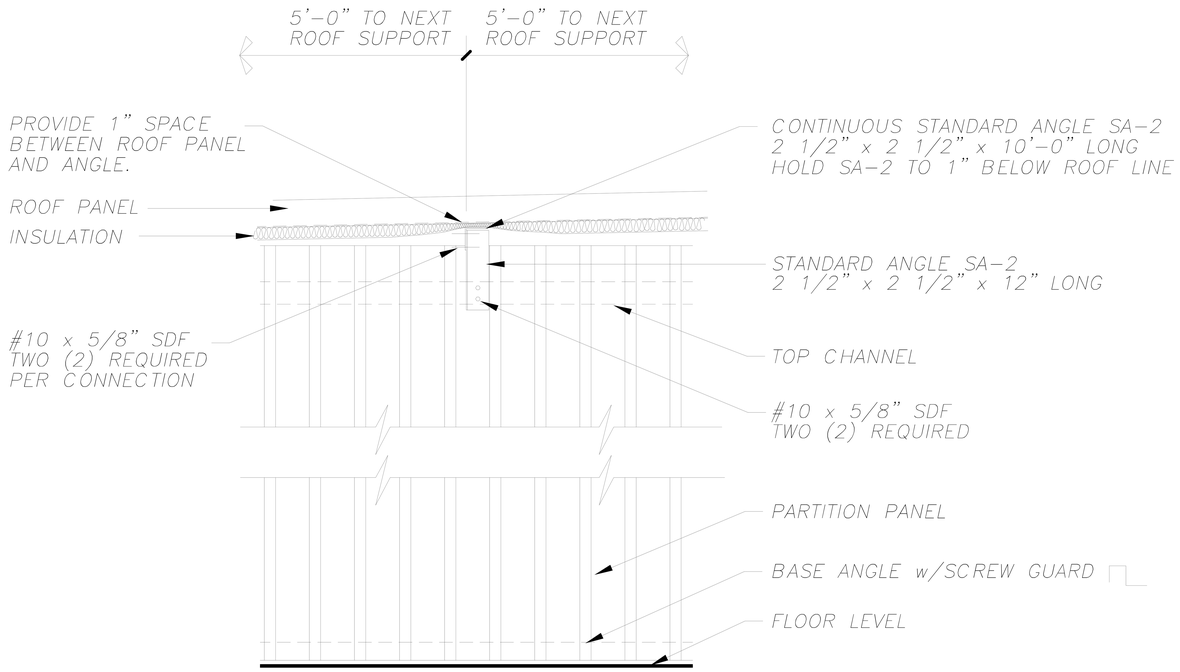

ELEVATION AT INTERMEDIATE INSULATION SUPPORT

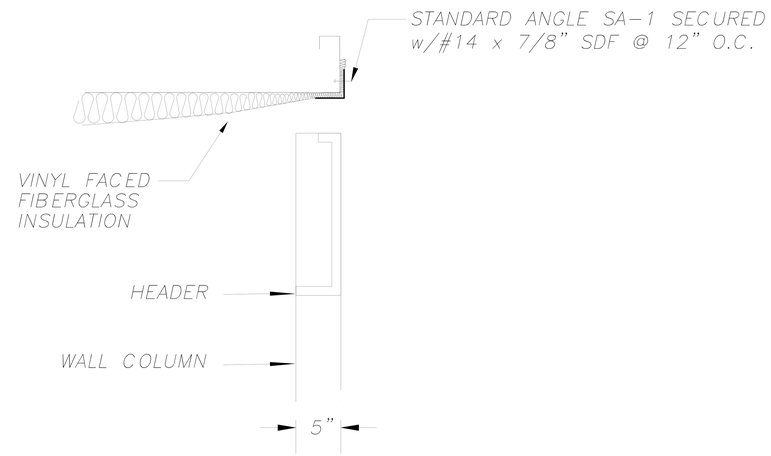

INSULATION INSTALLATION AT END WALL

NORTH CAROLINA PROFESSIONAL SEAL 029129 ENGINEER STEVEN W. SCHAUB

FEB 26 2026

REVISIONS	DATE	BY
3 ADDED ROOF FASTENER NOTE	4/17/03	JCM
2 REVISED SA-2 GAP	1/14/03	BAM
1 GENERAL REVISIONS	3-8-99	FOX

BETCO, INC.
BUILDING THE FUTURE OF SELF STORAGE
P.O. BOX 1650
STATESVILLE, NC 28687

SHEET TITLE: Insulation installation

DRAWN BY: J Pope	APPROVED BY:	DRAWING NUMBER:
SCALE: NTS	DATE: 6-27-94	ERC700X

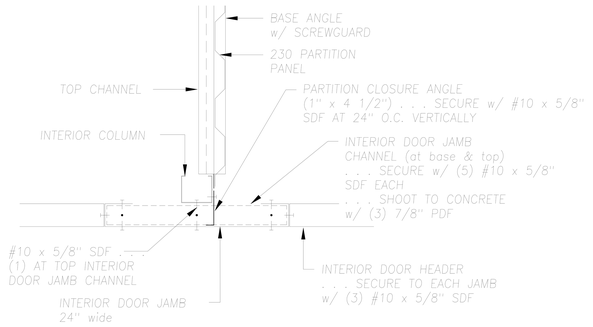

A 250 DOOR JAMB CONNECTION AT INTERIOR COLUMN

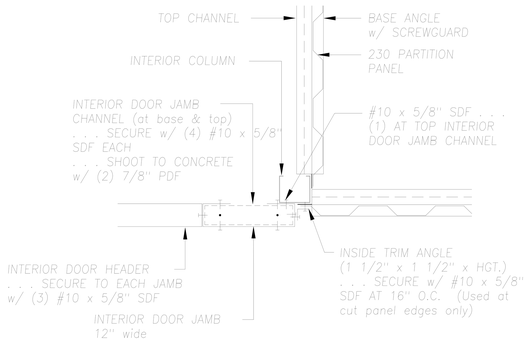

B 250 DOOR JAMB CONNECTION AT INTERIOR COLUMN AND PARTITION PANEL

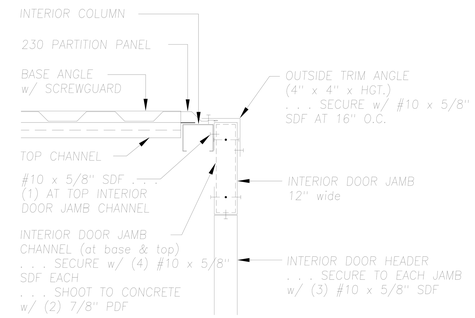

C 250 DOOR JAMB CONNECTION AT OUTSIDE CORNER

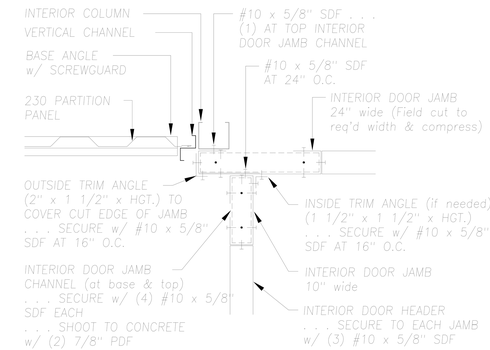

D 250 DOOR JAMB CONNECTION AT INSIDE CORNER

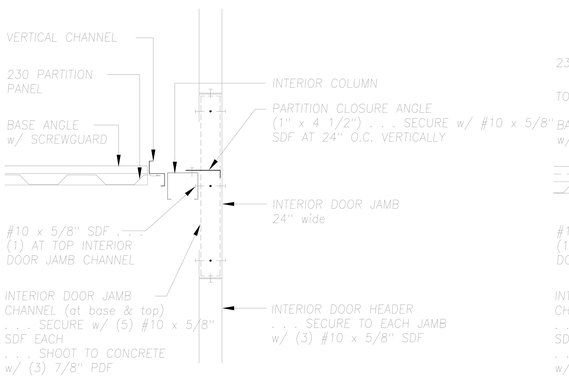

E 250 DOOR JAMB CONNECTION AT INTERIOR COLUMN

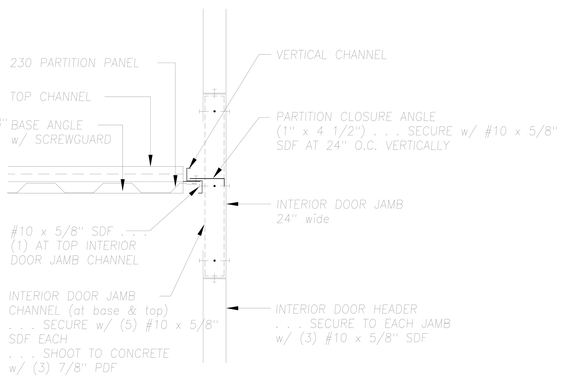

F 250 DOOR JAMB CONNECTION AT VERTICAL CHANNEL

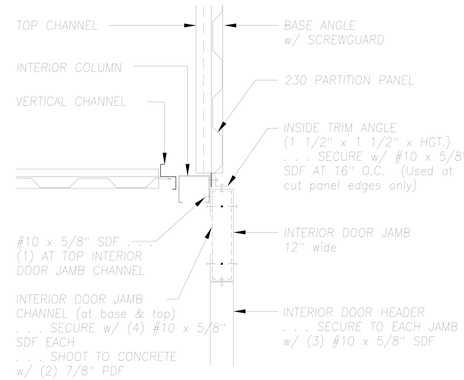

G 250 DOOR JAMB CONNECTION AT INTERIOR COLUMN AND PARTITION PANEL

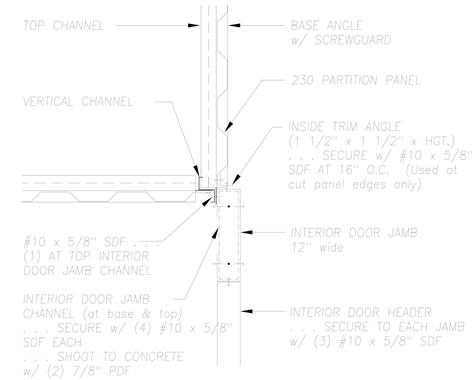

H 250 DOOR JAMB CONNECTION AT VERTICAL CHANNEL AND PARTITION PANEL

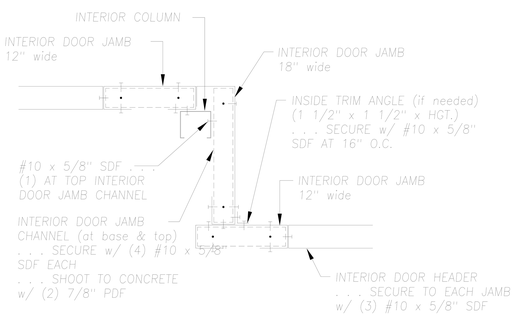

I 250 DOOR JAMB CONNECTION AT 18" CORRIDOR OFFSET

FEB 26 2026

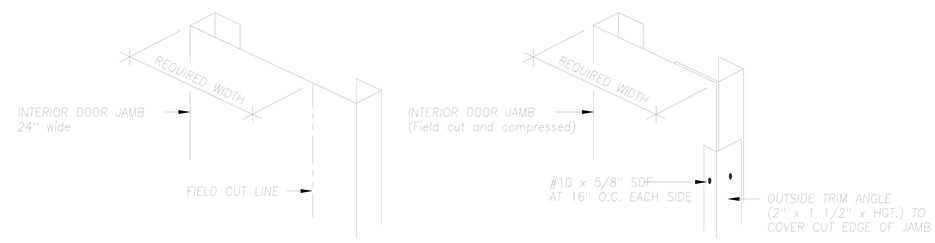

DETAIL FOR THE FIELD CUTTING AND COMPRESSION OF INTERIOR DOOR JAMBS

REVISIONS	DATE	BY

BETCO
P.O. BOX 1650
STATESVILLE, NC 28687

SHEET TITLE: *Typical Interior Corridor Details*

DRAWN BY: BDL	APPROVED BY:	DRAWING NUMBER:
SCALE: NTS	DATE: 8/8/08	ERC250N

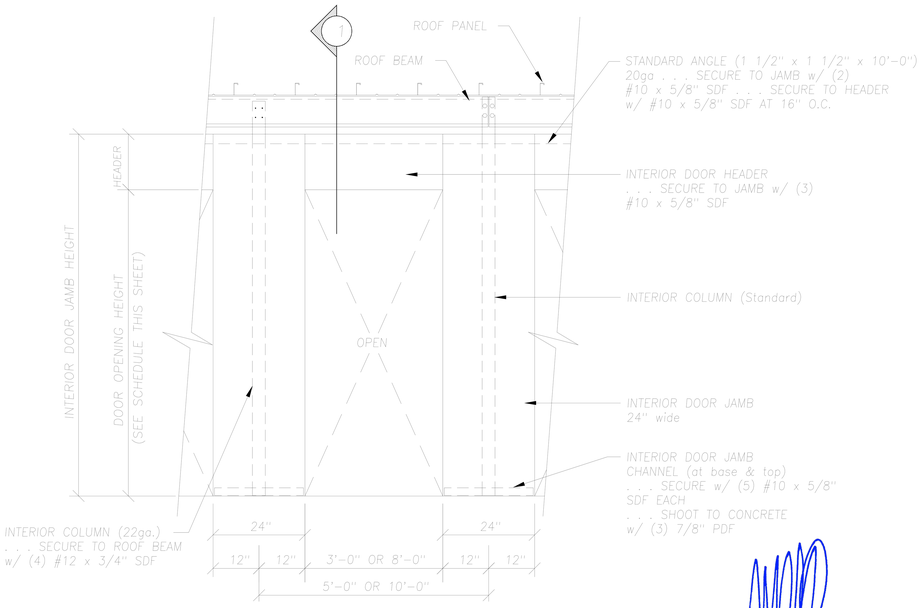

A 252 ELEVATION OF INTERIOR DOOR FRAMING PARALLEL TO ROOF BEAM

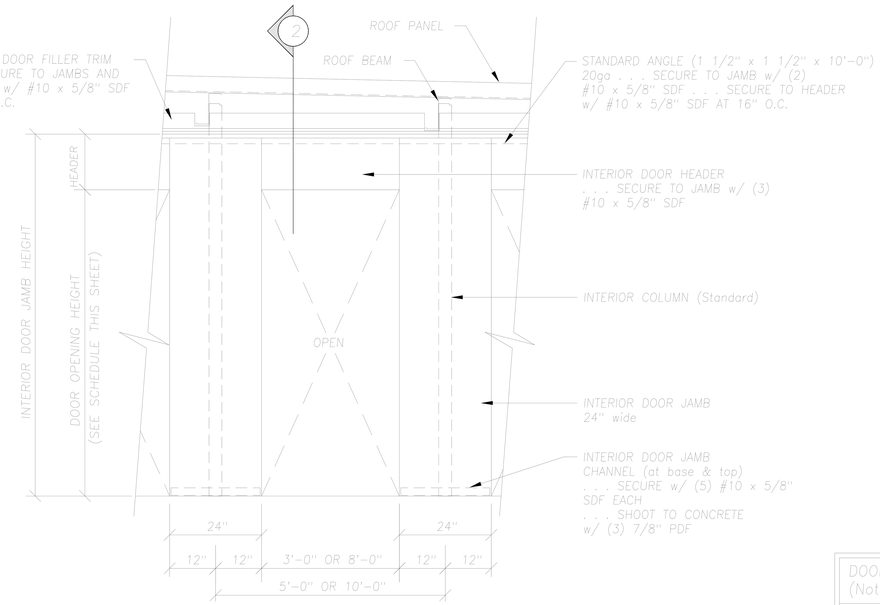

B 252 ELEVATION OF INTERIOR DOOR FRAMING PERPENDICULAR TO ROOF BEAM

NOTES :

Roof insulation is not shown for clarity.

See ERC250X for installation of door stops at swing doors.

DOOR OPENING HEIGHT SCHEDULE
(Note: See Floor Plans to determine interior door heights)

INTERIOR DOOR HEIGHT	ROLL-UP DOOR OPENING HEIGHT	SWING DOOR OPENING HEIGHT
6'-8"	6'-8"	6'-9 1/2"
7'-0"	7'-0"	7'-1 1/2"

NORTH CAROLINA PROFESSIONAL SEAL 029129 ENGINEER STEVEN W. SCHAUB

FEB 26 2026

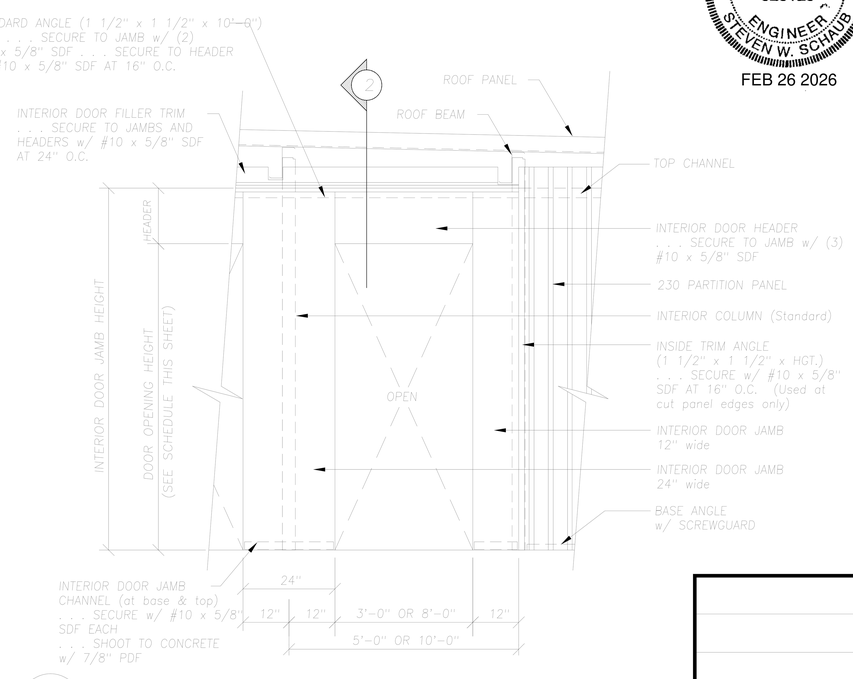

C 252 ELEVATION OF INTERIOR DOOR FRAMING PERPENDICULAR TO ROOF BEAM WITH ADJOINING PARTITION PANELS

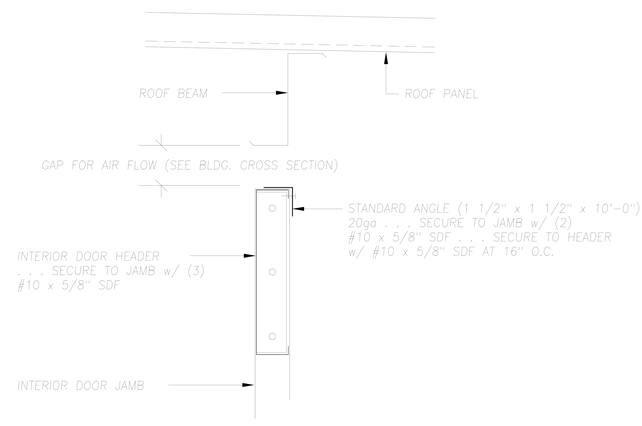

SECTION "1"

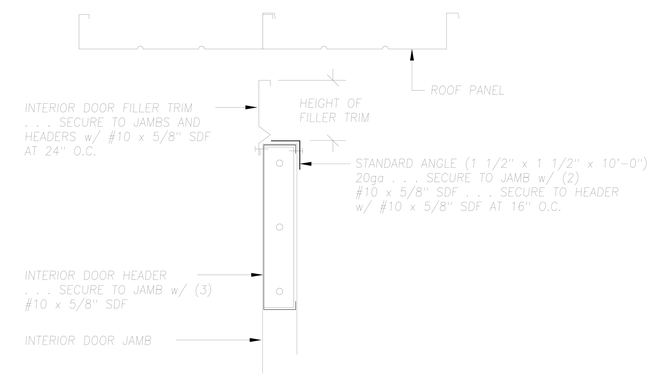

SECTION "2"

REVISIONS	DATE	BY

BETCO
P.O. BOX 1650
STATESVILLE, NC 28687

SHEET TITLE: *Interior Corridor Elevations*

DRAWN BY: BDL	APPROVED BY:	DRAWING NUMBER:
SCALE: NTS	DATE: 8/8/08	ERC252N

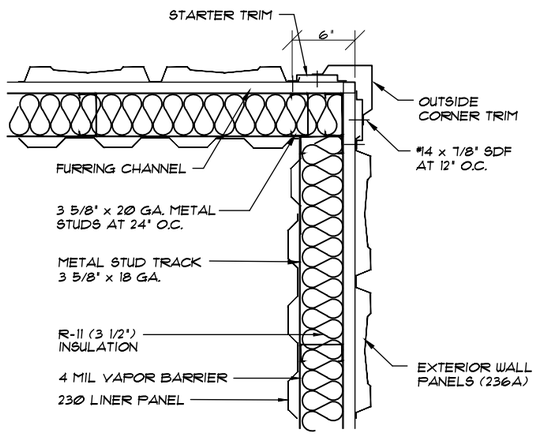

INSULATED STUDWALL CORNER DETAIL

A 600

NOT TO SCALE

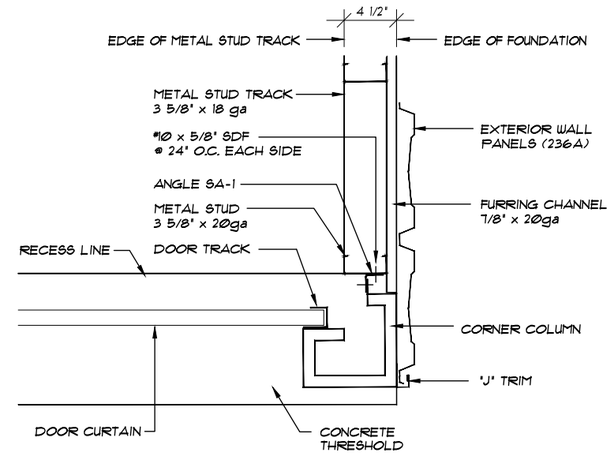

C 600 STUDWALL CONSTRUCTION @ CORNER COLUMN

NOT TO SCALE

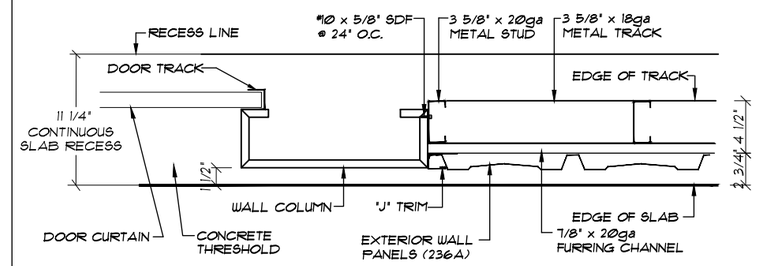

*NOTE: WALL PANELS AND "J" TRIM MUST LINE UP WITH OUTSIDE EDGE OF WALL COLUMN

E 600 STUDWALL CONSTRUCTION @ WALL COLUMN IN RECESS

NOT TO SCALE

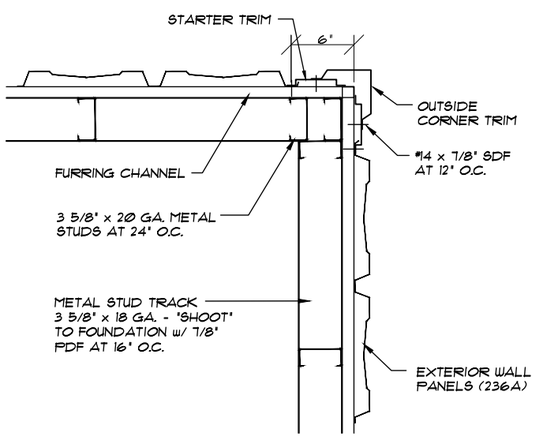

UNINSULATED STUDWALL CORNER DETAIL

B 600

NOT TO SCALE

NORTH CAROLINA PROFESSIONAL SEAL 029129 ENGINEER STEVEN W. SCHAUB

FEB 26 2026

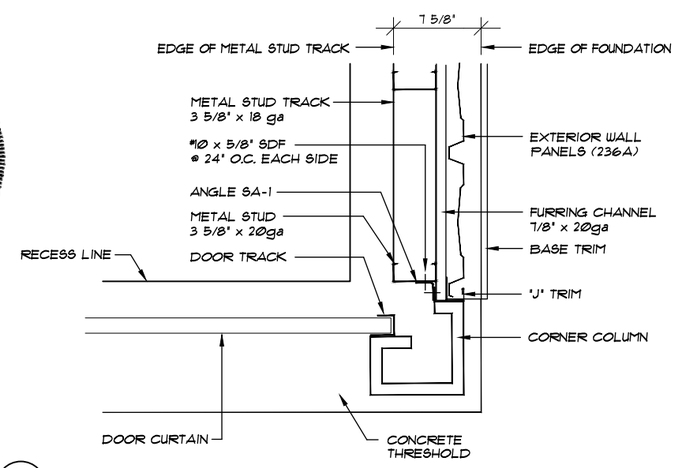

D 600 STUDWALL CONSTRUCTION @ CORNER COLUMN W/ THRESHOLD

NOT TO SCALE

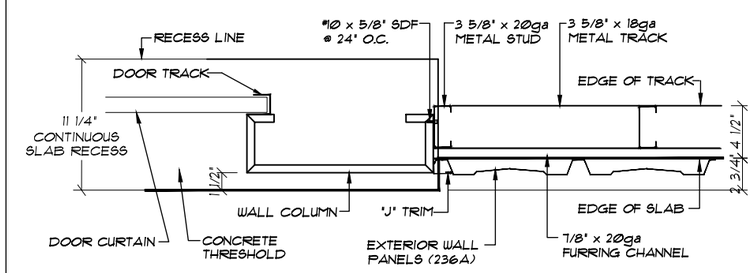

*NOTE: WALL PANELS AND "J" TRIM MUST LINE UP WITH OUTSIDE EDGE OF WALL COLUMN

F 600 STUDWALL CONSTRUCTION @ WALL COLUMN

NOT TO SCALE

1 REVISED STUD SIZE	8/29/02	BAM
REVISIONS	DATE	BY

BETCO
228 COMMERCE BLVD.
STATESVILLE, NC 28625
(800)654-7813

SHEET TITLE: *Studwall Details*

DRAWN BY: CJG	APPROVED BY:	DRAWING NUMBER: ERC600X
SCALE: NTS	DATE: 4/14/00	

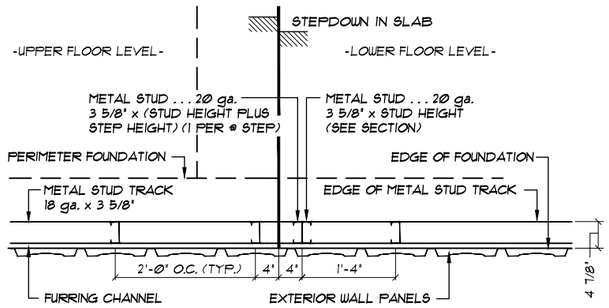

A/601 PLAN VIEW OF STUDWALL @ FLOOR STEPDOWN

NOT TO SCALE

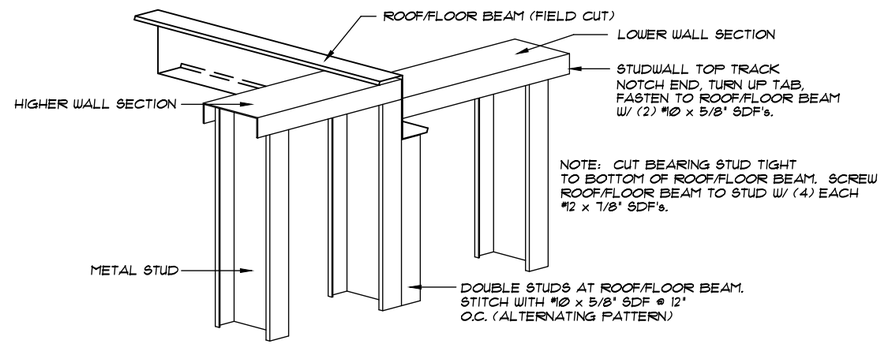

C/601 ROOF/FLOOR BEAM @ STUDWALL

NOT TO SCALE

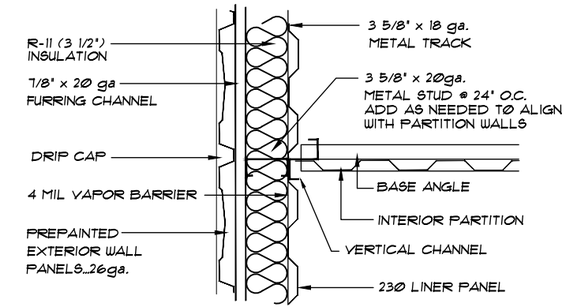

E/601 PARTITION INSTALLATION AT INSULATED EXTERIOR STUDWALL

NOT TO SCALE

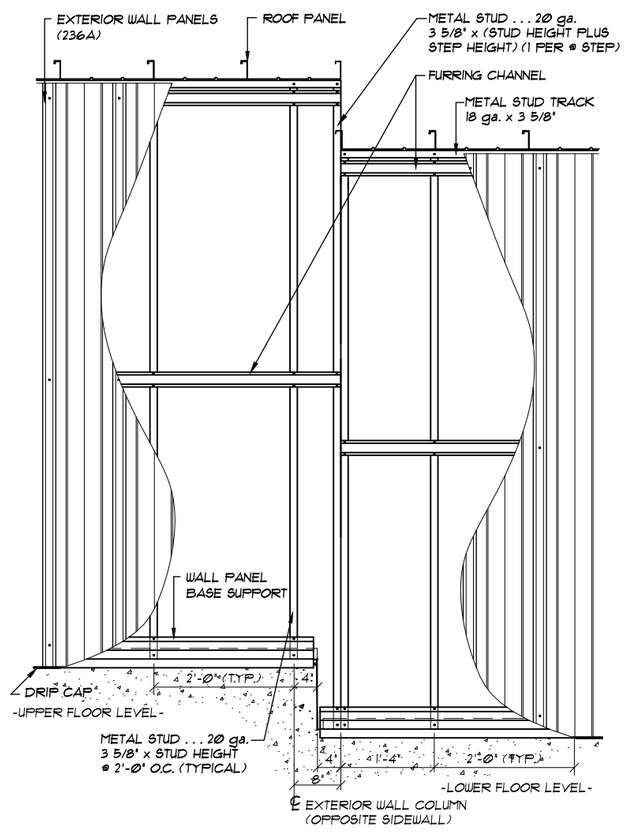

B/601 ELEVATION @ STUDWALL AND STEPDOWN

NOT TO SCALE

NORTH CAROLINA PROFESSIONAL SEAL 029129 ENGINEER STEVEN W. SCHAUB

FEB 26 2026

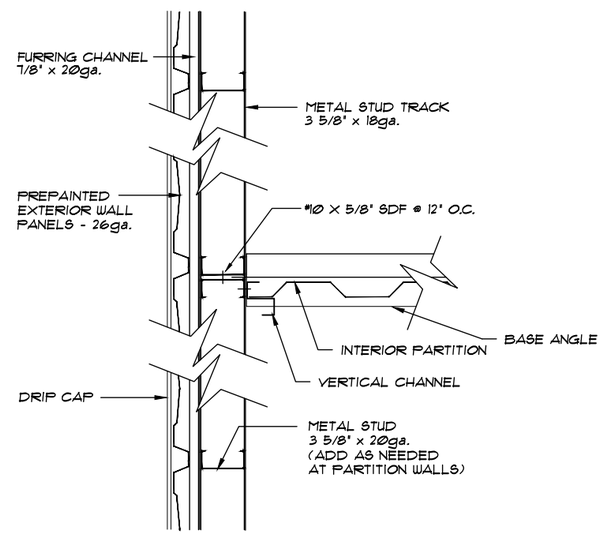

D/601 PARTITION INSTALLATION UNDER ROOF BEAM

NOT TO SCALE

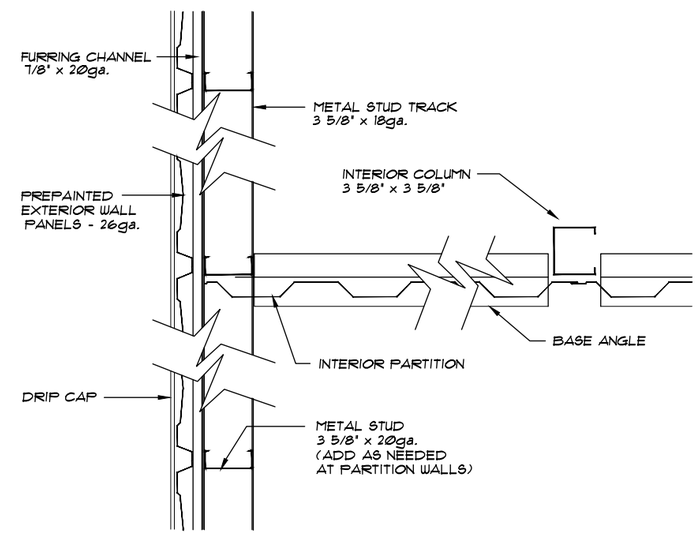

F/601 PARTITION INSTALLATION AT STUDWALL

NOT TO SCALE

REVISIONS	DATE	BY
3 REVISED C/601 TO INCLUDE FLOOR BEAM	5/1/03	JCM
2 REVISED C/601 TO INCLUDE FLOOR BEAM	4/17/03	JCM
1 REVISED STUD SIZE	8/29/02	BAM

BETCO
228 COMMERCE BLVD.
STATESVILLE, NC 28625
(800)654-7813

SHEET TITLE: *Studwall Details*

DRAWN BY: CJG	APPROVED BY:	DRAWING NUMBER: ERC601X
SCALE: NTS	DATE: 4/14/00	

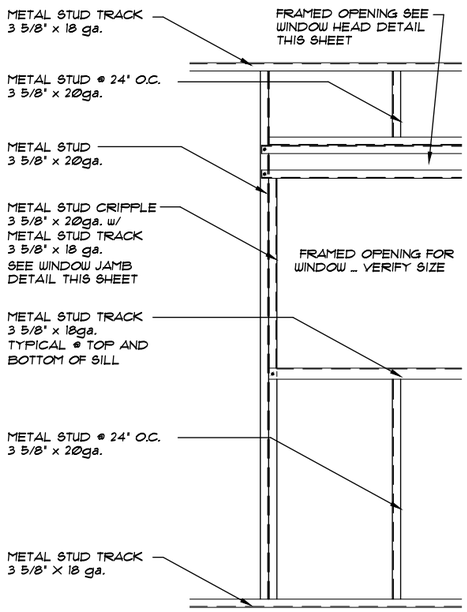

WINDOW OPENING FRAMING DETAIL

NOT TO SCALE

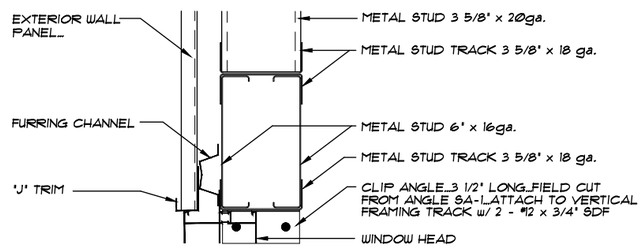

TYPICAL WINDOW HEADER DETAIL

NOT TO SCALE

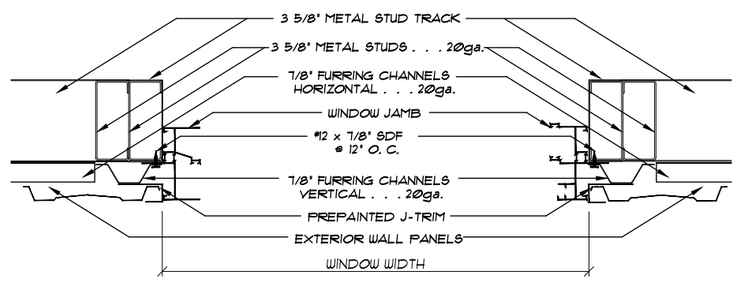

TYPICAL WINDOW JAMB DETAIL

NOT TO SCALE

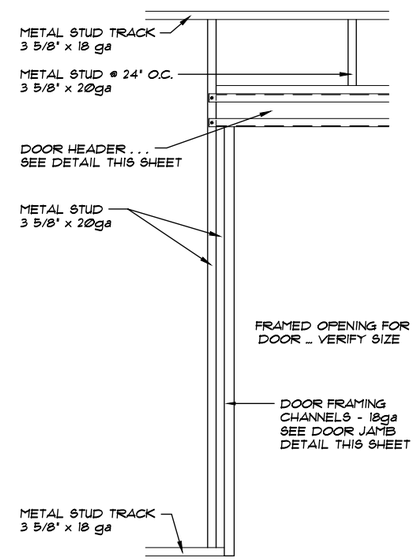

DOOR OPENING FRAMING DETAIL

NOT TO SCALE

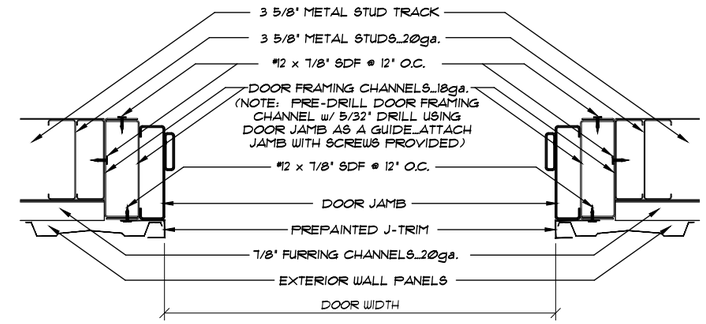

TYPICAL DOOR JAMB DETAIL

NOT TO SCALE

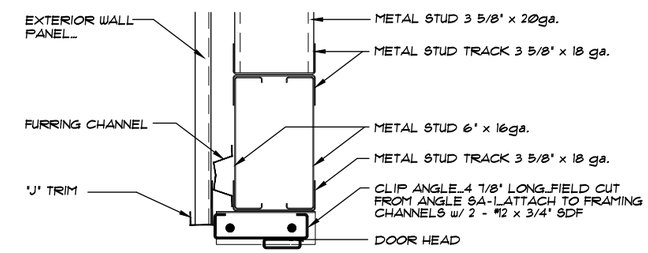

TYPICAL DOOR HEADER DETAIL

NOT TO SCALE

NOTE:
VERIFY ACTUAL DOOR DIMENSIONS PRIOR TO FRAMING OPENINGS AS DOORS CAN VARY SLIGHTLY FROM THE DIMENSIONS LISTED BY MANUFACTURER.

	PLYCO*	PDL*
DOOR SIZE	OUT TO OUT FRAME DIMENSION	OUT TO OUT FRAME DIMENSION
3'-6" x 6'-8"	3'-10" x 6'-9 13/16"	3'-10" x 6'-10 1/4"
4'-0" x 6'-8"	4'-4" x 6'-9 13/16"	4'-4" x 6'-10 1/4"
3'-6" x 7'-0"	3'-10" x 7'-1 13/16"	3'-10" x 7'-2 1/4"
4'-0" x 7'-0"	4'-4" x 7'-1 13/16"	4'-4" x 7'-2 1/4"

* VERIFY DOOR MANUFACTURER WITH TAKE-OFF

FEB 26 2026

REVISIONS	DATE	BY
REVISED DUE TO DOOR HEIGHT CHANGE	4/7/05	BDL
REVISED STUD SIZE	8/29/02	BAM
ADDED DOOR DIMENSIONS AND NOTE	9/7/01	JRB

BETCO
228 COMMERCE BLVD.
STATESVILLE, NC 28625
(800)654-7813

SHEET TITLE:
Exterior Personnel Door & Window Details In Studwall

DRAWN BY: JCM	APPROVED BY:	DRAWING NUMBER:
SCALE: NTS	DATE: 4/14/00	ERC602X

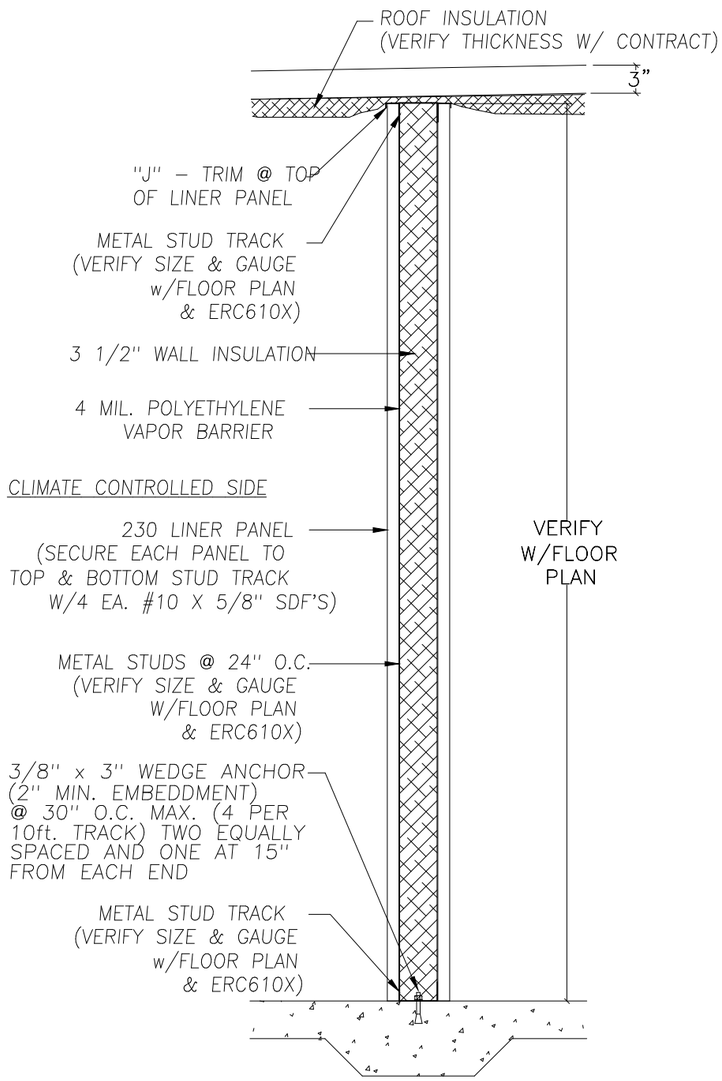

A 615 INTERIOR CLIMATE CONTROLLED STUDWALL (LOAD BEARING)

NOT TO SCALE

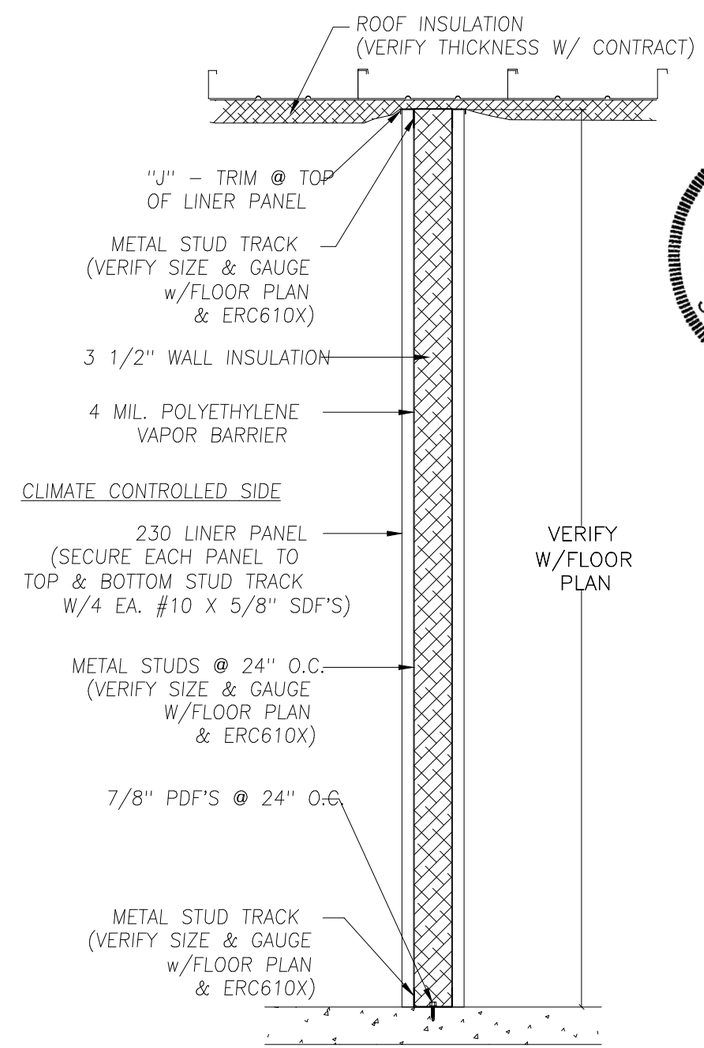

B 615 INTERIOR CLIMATE CONTROLLED STUDWALL (NON–LOAD BEARING)

NOT TO SCALE

NORTH CAROLINA PROFESSIONAL SEAL 029129 ENGINEER STEVEN W. SCHAUB

FEB 26 2026

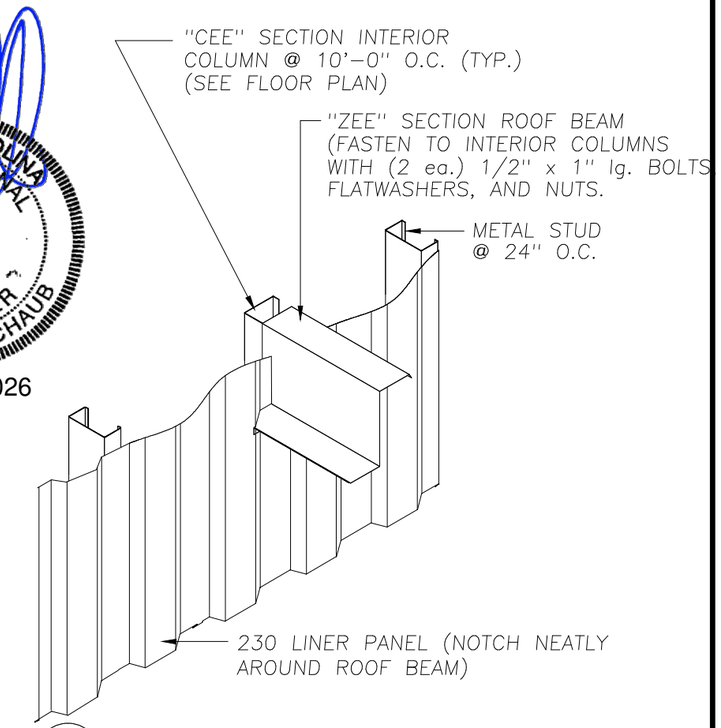

C 615 ROOF BEAM @ CLIMATE CONTROLLED WALL (NON–LOAD BEARING)

NOT TO SCALE

NOTE: ATTACH PARTITION PANELS TO INTERIOR COLUMN ONLY (NOT STUDS) WITH 4 EACH #10 X 5/8" SDF'S INSTALLED AT THE TOP, BOTTOM, AND AT THE 1/3 POINTS NOT TO EXCEED A 3'–0" VERTICAL SPACING BETWEEN FASTENERS.

GENERAL STUDWALL CONSTRUCTION:

A) – ATTACH STUDS WITH #10 X 5/8" SDF'S EACH SIDE OF TRACK (4 PER STUD).
B) – WALLS MUST EXTEND FROM FLOOR TO ROOF DECK AND INTO WALL COLUMN CAVITY.
C) – TOP TRACK MUST FOLLOW SLOPE OF ROOF LINE.

REVISIONS	DATE	BY
3 REVISED STUD TRACK FASTENERS	1/12/04	JCM
2 CHANGED 3/8" W/A LENGTH TO 3"	4/30/03	RSG
1 REVISED INSULATION	8/29/02	BAM

BETCO

P.O. BOX 1650
STATESVILLE, NC 28687

SHEET TITLE: INTERIOR CLIMATE CONTROLLED STUDWALL SECTIONS

DRAWN BY: SHL	APPROVED BY:	DRAWING NUMBER: ERC615X
SCALE: NTS	DATE: 5/16/01	

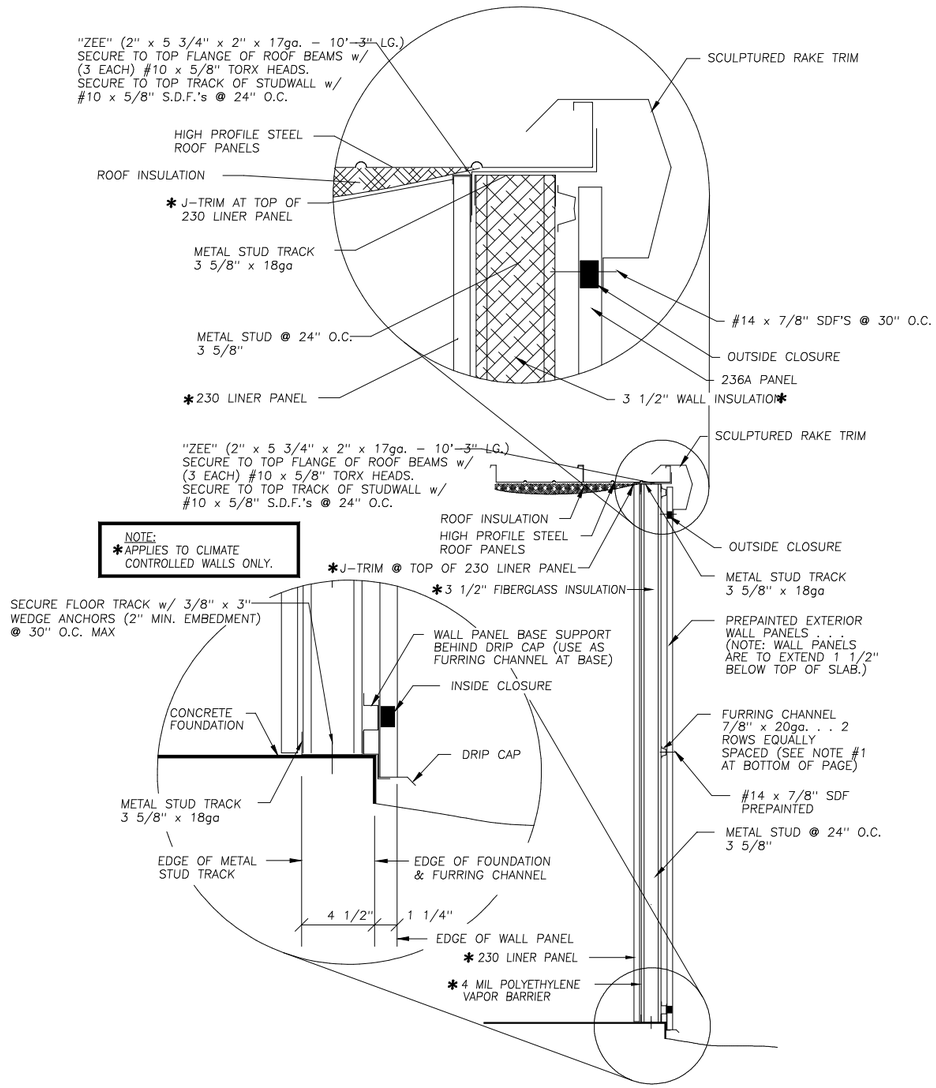

A / 630 SECTION AT EXTERIOR STUDWALL ENDWALL

NOT TO SCALE

FEB 26 2026

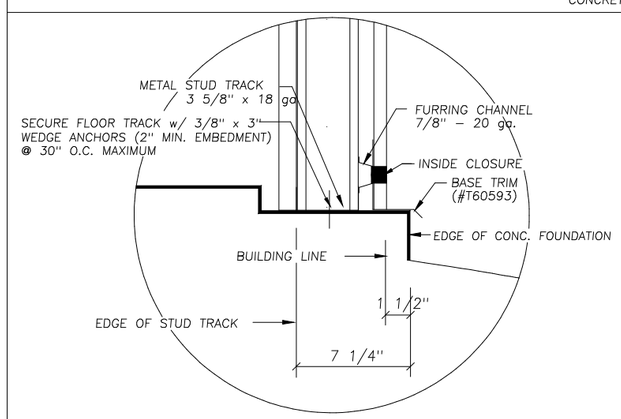

BASE CONDITION FOR STUDWALL IN RECESS

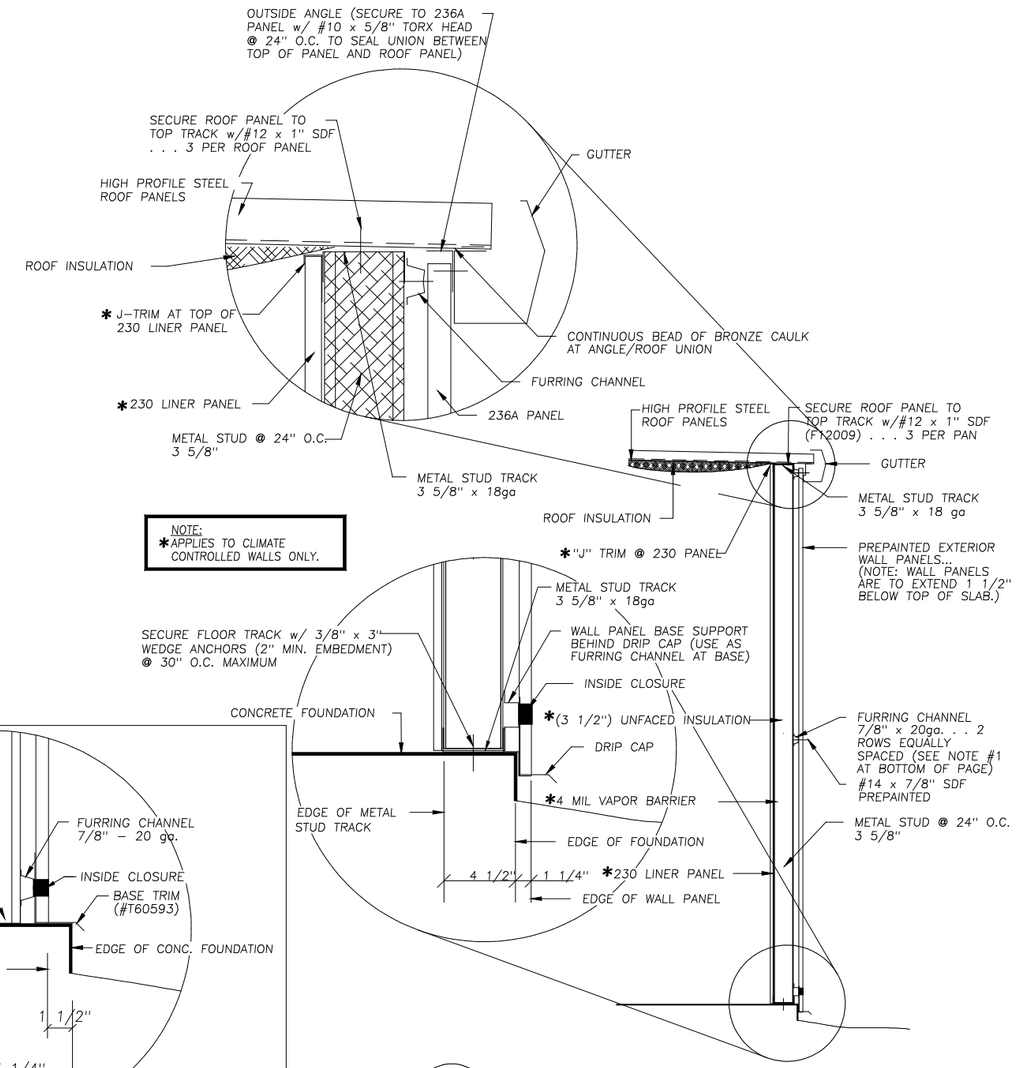

B / 630 SECTION AT EXTERIOR STUDWALL SIDEWALL

NOT TO SCALE

NOTE #1: IF STUDWALL IS GREATER THAN OR EQUAL TO 9'–10 1/2" HGT. 2 EQUALLY SPACED ROWS OF INTERMEDIATE FURRING CHANNELS ARE REQUIRED BETWEEN BASE AND TOP OF STUDWALL.

NOTE #2: NOT ALL BUILDINGS HAVE ROOF INSULATION, CHECK CROSS SECTION FOR INSULATION.

REVISIONS	DATE	BY

BETCO

P.O. BOX 1650
STATESVILLE, NC 28687

SHEET TITLE: *Studwall Sections*

DRAWN BY: JCM	APPROVED BY:	DRAWING NUMBER:
SCALE: NTS	DATE: 11/8/11	ERC630X

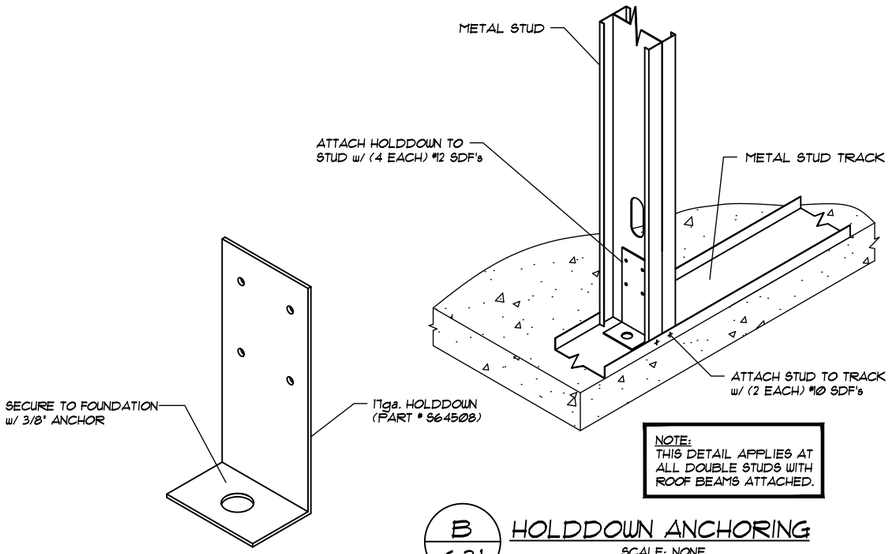

NOTE:
THIS DETAIL APPLIES AT ALL DOUBLE STUDS WITH ROOF BEAMS ATTACHED.

B / 631 HOLDDOWN ANCHORING

SCALE: NONE

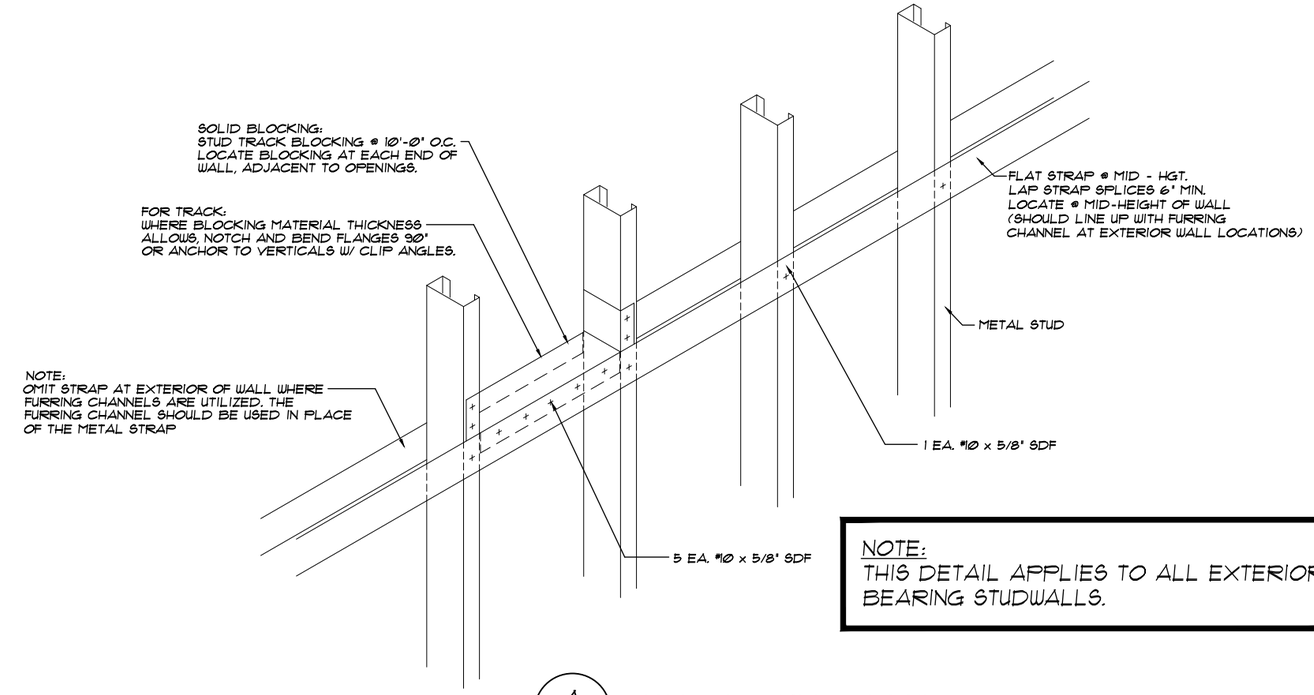

NOTE:
THIS DETAIL APPLIES TO ALL EXTERIOR BEARING STUDWALLS.

A / 631 WALL BLOCKING DETAIL

SCALE: NONE

NORTH CAROLINA PROFESSIONAL SEAL 029129 ENGINEER STEVEN W. SCHAUB

FEB 26 2026

REVISIONS	DATE	BY

BETCO
228 COMMERCE BLVD.
STATESVILLE, NC 28625
(800)654-7813

SHEET TITLE: *Studwall Details*

DRAWN BY: JCM	APPROVED BY:	DRAWING NUMBER: ERC631X
SCALE: NTS	DATE: 11/8/11	