2018 APPENDIX B
BUILDING CODE SUMMARY
FOR ALL COMMERCIAL PROJECTS

(EXCEPT 1 AND 2-FAMILY DWELLINGS AND TOWNHOUSES)

(Reproduce the following data on the building plans sheet 1 or 2)

Name of Project: PJ's Truck Bodies & Equipment - Expansion

Address: 4298 Hodges Chapel Rd Dunn, NC Zip Code 28334

Owner/Authorized Agent: Junior Faircloth Phone # (910) 892 - 5286 E-Mail jonas@pjstruckbodies.com

Owned By: ☐ City/County ☒ Private ☐ State

Code Enforcement Jurisdiction: ☐ City ☒ County Harnett ☐ State

CONTACT: Jonas Parrish

DESIGNER	FIRM	NAME	LICENSE #	TELEPHONE #	E-MAIL
Architectural	N/A	---	---	( )	---
Civil	Smith Engineering + Design	Joe Smith	024916	(919) 738-2141	smithengineeringnc@hotmail.com
Electrical	Chris Sinclair Electric	Chris Sinclair	27819-L	(919) 820-6229	chrissinclairelectric@gmail.com
Fire Alarm	N/A			( )	
Plumbing	N/A			( )	
Mechanical	N/A			( )	
Sprinkler-Standpipe	N/A			( )	
Structural	Renegade Steel Buildings	Wayne B. Baker	33446	(706) 854-3100	
Retaining Walls >5' High	N/A	---	---	( )	---
Other	N/A	---	---	( )	---

("Others" should include firms and individuals such as truss, precast, pre-engineered, interior designers, etc.)

2018 NC CODE FOR: ☒ New Construction ☐ Addition ☐ Renovation
☐ 1st Time Interior Completion
☐ Shell/Core
☐ Phased Construction – Shell/Core
☐ Renovation

2018 NC EXISTING BUILDING CODE: ☐ Prescriptive ☐ Repair ☐ Chapter 14
Alteration: ☐ Level I ☐ Level II ☐ Level III
☐ Historic Property ☐ Change of Use

CONSTRUCTED: (date) _____ **ORIGINAL OCCUPANCY(S)** (Ch. 3): _____

RENOVATED: (date) _____ **CURRENT OCCUPANCY(S)** (Ch. 3): F-1

RISK CATEGORY (table 1604.5) **Current:** ☐ I ☐ II ☐ III ☐ IV
Proposed: ☐ I ☒ II ☐ III ☐ IV

BASIC BUILDING DATA

Construction Type: ☐ I-A ☐ II-A ☐ III-A ☐ IV ☐ V-A
(check all that apply) ☐ I-B ☒ II-B ☐ III-B ☐ V-B

Sprinklers: ☒ No ☐ Partial ☐ Yes ☐ NFPA 13 ☐ NFPA 13R ☐ NFPA 13D

Standpipes: ☒ No ☐ Yes Class ☐ I ☐ II ☐ III ☐ Wet ☐ Dry

Fire District: ☐ No ☒ Yes (Primary) **Flood Hazard Area:** ☒ No ☐ Yes

Special Inspections Required: ☒ No ☐ Yes

Gross Building Area:

FLOOR	EXISTING (SQ FT)	NEW (SQ FT)	RENO/ALTER (SQ FT)	SUB-TOTAL
6th Floor				
5th Floor				
4th Floor				
3rd Floor				
2nd Floor				
Mezzanine				
1st Floor		2,400		2,400
Basement				
TOTAL				

ALLOWABLE AREA

Primary Occupancy Classification: SELECT ONE

Assembly ☐ A-1 ☐ A-2 ☐ A-3 ☐ A-4 ☐ A-5
Business ☐
Educational ☐
Factory ☒ F-1 Moderate ☐ F-2 Low
Hazardous ☐ H-1 Detonate ☐ H-2 Deflagrate ☐ H-3 Combust ☐ H-4 Health ☐ H-5 HPM
Institutional ☐ I-1 Condition ☐ 1 ☐ 2
☐ I-2 Condition ☐ 1 ☐ 2
☐ I-3 Condition ☐ 1 ☐ 2 ☐ 3 ☐ 4 ☐ 5
☐ I-4
Mercantile ☐
Residential ☐ R-1 ☐ R-2 ☐ R-3 ☐ R-4
Storage ☐ S-1 Moderate ☐ S-2 Low ☐ High-piled
☐ Parking Garage ☐ Open ☐ Enclosed ☐ Repair Garage
Utility and Miscellaneous ☐

Accessory Occupancy Classification(s): B

Incidental Uses (Table 509): N/A

Special Uses (Chapter 4 – List Code Sections) _____

Special Provisions: (Chapter 5 – List Code Sections): _____

Mixed Occupancy: ☒ No ☐ Yes Separation: ____ Hr. Exception: _____

☐ Non-Separated Use (508.3)
The required type of construction for the building shall be determined by applying the height and area limitations for each of the applicable occupancies to the entire building. The most restrictive type of construction, so determined, shall apply to the entire building.

☐ Separated Use (508.4) -
See below for area calculations for each story, the area of the occupancy shall be such that the sum of the ratios of the actual floor area of each use divided by the allowable floor area for each use shall not exceed 1.

$$\frac{\text{Actual Area of Occupancy A}}{\text{Allowable Area of Occupancy A}} + \frac{\text{Actual Area of Occupancy B}}{\text{Allowable Area of Occupancy B}} \leq 1$$

$$\frac{\text{----}}{} + \frac{\text{----}}{} + \ldots = \text{---} \leq 1.00$$

STORY NO.	DESCRIPTION AND USE	(A) BLDG AREA PER STORY (ACTUAL)	(B) TABLE 506.2* AREA	(C) AREA FOR FRONTAGE INCREASE[1,2]	(D) ALLOWABLE AREA PER STORY OR UNLIMITED[2,3]
1	Body Installation	2,400	15,500	3,875	19,375
---	---	---	---	---	---
---	---	---	---	---	---
---	---	---	---	---	---
---	---	---	---	---	---
---	---	---	---	---	---

[1] Frontage area increases from Section 506.3 are computed thus:
a. Perimeter which fronts a public way or open space having 20 feet minimum width = 100 (F)
b. Total Building Perimeter = 200 (P)
c. Ratio (F/P) = 0.5 (F/P)
d. W = Minimum width of public way = 30 (W)
e. Percent of frontage increase $I_f = 100\,[F/P - 0.25] \times W/30$ = 25 (%)

[2] Unlimited area applicable under conditions of Section 507

[3] Maximum Building Area = total number of stories in the building x D (maximum 3 stories) (506.2).

[4] The maximum area of open parking garages must comply with Table 406.5.4

[5] Frontage increase is based on the unsprinklered area value in Table 506.2.

ALLOWABLE HEIGHT

	ALLOWABLE (TABLE 503)	SHOWN ON PLANS	CODE REFERENCE
Building Height in Feet (Table 504.3)	55	19'-4"	---
Building Height in Stories (Table 504.4)	2	1	---

[1] Provide code reference if the "Show on Plans" quantity is not based on Table 504.3 or 504.4.

[2] The maximum height of air traffic control towers must comply with Table 412.3.1

[3] The maximum height of open parking garages must comply with Table 406.5.4

FIRE PROTECTION REQUIREMENTS

BUILDING ELEMENT	FIRE SEPARATION DISTANCE (FEET)	REQ'D	RATING PROVIDED (W/ * REDUCTION)	DETAIL # AND SHEET #	DESIGN # FOR RATED ASSEMBLY	DESIGN # FOR RATED PENETRATION	DESIGN # FOR RATED JOINTS
Structural Frame, including columns, girders, trusses	>10'	0					
Bearing Walls							
Exterior							
North	>10'	0					
East	>10'	0					
West	>10'	0					
South	>10'	0					
Interior							
Nonbearing Walls and Partitions							
Exterior walls							
North	>10'	0					
East	>10'	0					
West	>10'	0					
South	>10'	0					
Interior walls and partitions							
Floor Construction Including supporting beams and joists		0					
Floor Ceiling Assembly							
Column Supporting Floors							
Roof Construction, including supporting beams and joists		0					
Roof Ceiling Assembly		0					
Column Supporting Roof		0					
Shaft Enclosures - Exit							
Shaft Enclosures - Other							
Corridor Separation							
Occupancy/Fire Barrier Separation							
Party/Fire Wall Separation							
Smoke Barrier Separation							
Smoke Partition							
Tenant/Dwelling Unit/ Sleeping Unit Separation							
Incidental Use Separation							

* Indicate section number permitting reduction

PERCENTAGE OF WALL OPENING CALCULATIONS

FIRE SEPARATION DISTANCE (FEET FROM PERPERTY LINES	DEGREES OF OPENINGS PROTECTION (TABLE 705.8)	ALLOWABLE AREA (%)	ACTUAL SHOWN ON PLANS (%)
>30' (South Wall)	UP, NS	No Limit	52.5
>30' (East & West Walls)	UP, NS	No Limit	3
>30' (North Wall)	UP, NS	No Limit	1.8

LIFE SAFETY SYSTEM REQUIREMENTS

Emergency Lighting: ☐ No ☑ Yes
Exit Signs: ☐ No ☑ Yes
Fire Alarm: ☑ No ☐ Yes
Smoke Detection Systems: ☑ No ☐ Yes ☐ Partial _____
Carbon Monoxide Detection: ☑ No ☐ Yes

LIFE SAFETY PLAN REQUIREMENTS

Life Safety Plan Sheet #: LS

☐ Fire and/or smoke rated wall locations (Chapter 7)
☐ Assumed and real property line locations (if not on the site plan)
☐ Exterior wall opening area with respect to distance to assumed property lines (705.8)
☒ Occupancy types for each area as it relates to occupant load calculation (Table 1004.1.2)
☒ Occupant loads for each area
☒ Exit access travel distances (1017)
☐ Common path of travel distances (1006.2.1 & 2006.3.2(1))
☐ Dead end lengths (1020.4)
☐ Clear exit widths for each exit door
☐ Maximum calculated occupant load capacity each exit door can accommodate based on egress width (1005.3)
☐ Actual occupant load for each exit door
☐ A separate schematic plan indicating where fire rated floor/ceiling and/or roof structure is provided for purposes of occupancy separation and supporting construction for a fire barrier/fire partition/smoke barrier.
☐ Location of doors with panic hardware (1010.1.10)
☐ Location of doors with delayed egress locks and the amount of delay (1010.1.9.7)
☐ Location of doors with electromagnetic egress locks (1010.1.9.9)
☐ Location of doors equipped with hold-open devices
☐ Location of emergency escape windows (1030)
☐ The square footage of each fire area (202)
☐ The square footage of each smoke compartment for Occupancy Classification I-2 (407.5)
☐ Note any code exceptions or table notes that may have been utilized regarding the items above

Section/Table/Note	Title

ACCESSIBLE DWELLING UNITS
(SECTION 1107)

TOTAL UNITS	ACCESSIBLE UNITS REQUIRED	ACCESSIBLE UNITS PROVIDED	TYPE A UNITS REQUIRED	TYPE A UNITS PROVIDED	TYPE B UNITS REQUIRED	TYPE B UNITS PROVIDED	TOTAL ACCESSIBLE UNITS PROVIDED
N/A	N/A	N/A	N/A	N/A	N/A	N/A	N/A

ACCESSIBLE PARKING
(SECTION 1106)

LOT OR PARKING AREA	TOTAL # OF PARKING SPACES REQUIRED	TOTAL # OF PARKING SPACES PROVIDED	# OF ACCESSIBLE SPACES PROVIDED: REGULAR WITH 5' ACCESS AISLE	VAN SPACES WITH 132" ACCESS AISLE	VAN SPACES WITH 8' ACCESS AISLE	TOTAL # ACCESSIBLE PROVIDED
Parking	6	8			1	1
					1	1
TOTAL					1	1

PLUMBING FIXTURE REQUIREMENTS
(TABLE 2902.1)

USE		WATERCLOSETS MALE	WATERCLOSETS FEMALE	WATERCLOSETS UNISEX	URINALS	LAVATORIES MALE	LAVATORIES FEMALE	LAVATORIES UNISEX	SHOWERS / TUBS	DRINKING FOUNTAINS REGULAR	DRINKING FOUNTAINS ACCESSIBLE
SPACE	EXIST'G										
	NEW	1	1		N/A	1	1		N/A	N/A	N/A
	REQ'D			1				1			

SPECIAL APPROVALS

Special approval: (Local Jurisdiction, Department of Insurance, SCO, DPI, DHHS, ICC, etc., describe below)

_____

_____

_____

ENERGY SUMMARY

ENERGY REQUIREMENTS:
The following data shall be considered minimum and any special attribute required to meet the **North Carolina Energy Conservation Code** shall also be provided. Each Designer shall furnish the required portions of the project information for the plan data sheet. If performance method, state the annual energy cost for the standard reference design vs annual energy cost for the proposed design.

Existing building envelope complies with code: ☐ No ☐ Yes (The remainder of this section is not applicable)

Exempt Building: ☐ No ☐ Yes (Provide Code or Statutory reference): _____

Climate Zone: ☐ 3A ☐ 4A ☐ 5A

Method of Compliance: **Energy Code** ☐ Performance ☐ Prescriptive
ASHRAE 90.1 ☐ Performance ☐ Prescriptive
(If "Other" specify source here) _____

THERMAL ENVELOPE (Prescriptive method only)

Roof/ceiling Assembly (each assembly)
Description of assembly: _____
U-Value of total assembly: _____
R-Value of insulation: _____
Skylights in each assembly: _____
U-Value of skylight: _____
Total square footage of skylights in each assembly: _____

Exterior Walls (each assembly)
Description of assembly: _____
U-Value of total assembly: _____
R-Value of insulation: _____
Openings (windows or doors with glazing)
U-Value of assembly: _____
Solar heat gain coefficient: _____
Projection factor: _____
Door R-Values: _____

Walls below grade (each assembly)
Description of assembly: _____
U-Value of total assembly: _____
R-Value of insulation: _____

Floors over unconditioned space (each assembly)
Description of assembly: _____
U-Value of total assembly: _____
R-Value of insulation: _____

Floors slab on grade
Description of assembly: _____
U-Value of total assembly: _____
R-Value of insulation: _____
Horizontal/Vertical requirement: _____
Slab Heated: _____

Reviewed for Fire Code Compliance
Harnett County NORTH CAROLINA
Leslie Jackson
09/25/2025 10:31:10 AM

2018 APPENDIX B
BUILDING CODE SUMMARY FOR ALL COMMERCIAL PROJECTS

STRUCTURAL DESIGN
(PROVIDE ON THE STRUCTURAL SHEETS IF APPLICABLE)

DESIGN LOADS:

Importance Factors: Snow (I_s) 1.00
Seismic (I_E) 1.00

Live Loads: Roof 20.0 psf
Mezzanine --- psf
Floor --- psf

Ground Snow Load: 15 psf

Wind Load: Ultimate Wind Speed 120 mph (ASCE-7)
Exposure Category B

SEISMIC DESIGN CATEGORY: ☐ A ☐ B ☐ C ☒ D

Provide the following Seismic Design Parameters:
Risk Category (Table 1604.5) ☐ I ☒ II ☐ III ☐ IV
Spectral Response Acceleration S_S 0.1810 %g S_1 0.0850 %g
Site Classification (ASCE 7) ☐ A ☐ B ☐ C ☒ D ☐ E ☐ F
Data Source: ☐ Field Test ☒ Presumptive ☐ Historical Data
Basic structural system ☐ Bearing Wall ☐ Dual w/Special Moment Frame
☒ Building Frame ☐ Dual w/Intermediate R/C or Special Steel
☐ Moment Frame ☐ Inverted Pendulum
Analysis Procedure: ☐ Simplified ☐ Equivalent Lateral Force ☐ Dynamic
Architectural, Mechanical, Components anchored? ☐ Yes ☐ No

LATERAL DESIGN CONTROL: Earthquake ☐ Wind ☒

SOIL BEARING CAPACITIES:
Field Test (provide copy of test report) --- psf
Presumptive Bearing capacity 2,000 psf
Pile size, type, and capacity ---

SHEET INDEX

SHEET	TITLE
AB	APPENDIX B
C1.0	SITE, GRADING, DRAINAGE, & EROSION CONTROL PLAN
C2.0	DETAILS
C2.1	DETAILS
C2.2	DETAILS & HRW UTILITY NOTES
F-1	FOUNDATION PLAN
F-2	FOUNDATION DETAILS
A100	FLOOR PLAN & ELEVATIONS
LS	LIFE SAFETY & PLUMBING SUPPLY/WASTE PLANS
E100	ELECTRICAL LIGHTING & POWER PLANS

JPF PROPERTIES
HODGES CHAPEL RD. BUILDING
ADDRESS PENDING
Dunn, NC 28334

Permit Set
11.10.2023

1560 George Perry Lee Rd.
Dunn, NC 28334

Telephone: 910.892.5286
Fax: 910.891.4396

Email:
jonas@pjstruckbodies.com

Website:
www.pjstruckbodies.com

APPENDIX B

AB

Docusign Envelope ID: 954CC716-22A0-4CC7-B644-64F3B94735AF

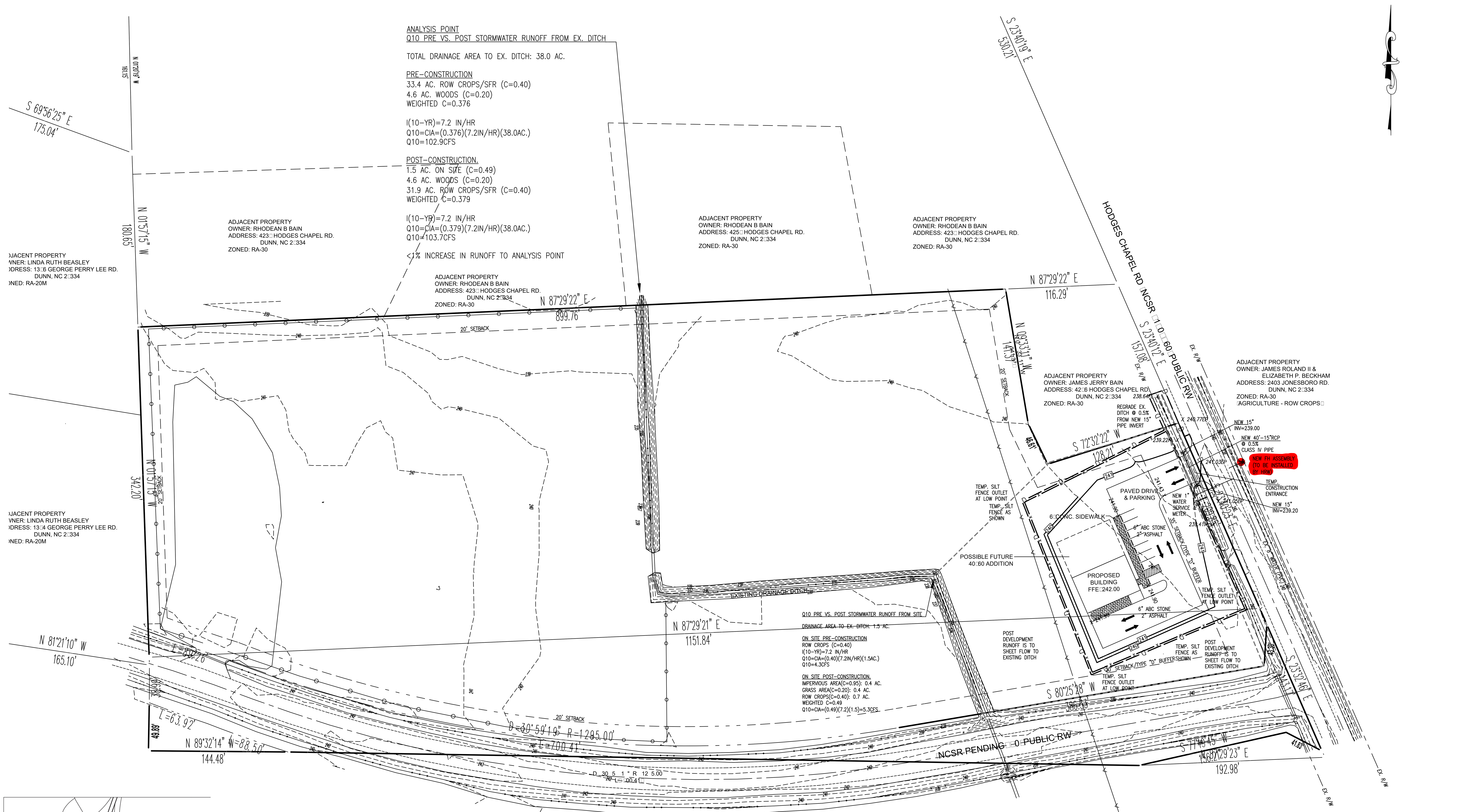

ADJACENT PROPERTY
OWNER: TREVY LEE BAREFOOT
ADDRESS: 43□6 HODGES CHAPEL RD.
DUNN, NC 2□334
ZONED: RA-30

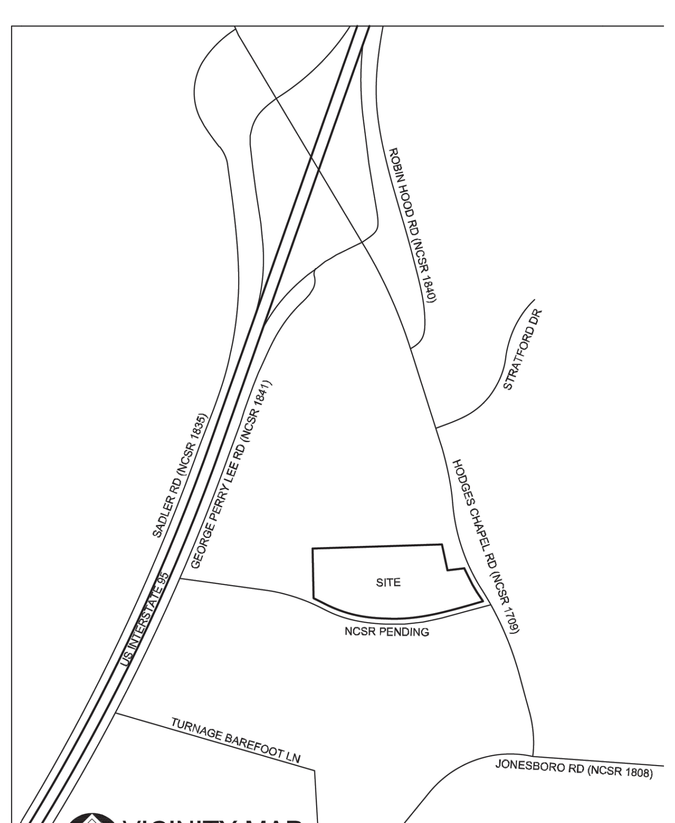

VICINITY MAP
(NOT TO SCALE)

BUFFER REQUIREMENTS FOR GROUP 3 (ZONED COMMERCIAL) AND GROUP 1 (RESIDENTIAL). TYPE A, D BUFFER REQUIRED
1) A STAGGERED ROW OF LARGE MATURING TREES <30' APART
2) MULCH OR EVERGREEN GROUND COVER TO COVER THE REMAINDER OF THE BUFFER.
3) TYPE A: 15' MIN. (APPLIES TO SIDE AND REAR PROPERTY LINES). W/ A 6' TALL OPAQUE FENCE (PG.189)
4) TYPE D: 15' MIN. (APPLIES TO PROPERTY LINES ADJACENT TO PLUBLIC RIGHT-OF-WAY. INCLUDING A 6' TALL OPAQUE FENCE (PG. 189-190)

GENERAL NOTES:
1) BUSINESS HOURS OF OPERATION WILL BE MONDAY THROUGH FRIDAY 8:00 AM - 5:00 PM
2) NO HAZARDOUS MATERIALS ARE EXPECTED ON SITE.
3) PJ'S TRUCK BODIES & EQUIPMENT IS RESPONSIBLE FOR MAINTENANCE OF THE PARKING AREA AND ALL LANDSCAPE BUFFERING.
4) TRASH CONTAINER WILL REMAIN INSIDE UNTIL IT IS REMOVED FROM SITE DAILY OR AS REQUIRED.
5) LAND USE CLASSIFICATION = EMPLOYMENT MIXED USE
6) THIS DEVELOPMENT IS WITHIN ONE MILE OF A VOLUNTARY AGRICULTURAL DISTRICT
7) SITE LIGHTING WILL BE PROVIDED BY WALL SCONCES LOCATED IN A MANNER TO PREVENT DIRECT GLARE OR LIGHTING TO ADJACENT PROPERTIES.

SITE DATA:
OWNER: JPF PROPERTIES, LLC
1560 GEORGE PERRY LEE RD.
DUNN, NC 28334

NCPIN: 1537-27-3212.000
DB: 4178, PG: 755
PC: #F, PG: 286C
TOWNSHIP: AVERASBORO
JURISDICTION: HARNETT COUNTY, NC
ZONED: COMMERCIAL

TOTAL AREA: 10.91 ACRES (475208.14 SQ.FT.)
IMPERVIOUS SURFACE: 2.8%

MINIMUM BUILDING SETBACKS:
FRONT YARD: 35'
REAR YARD: 25'
SIDE YARD: 0' (20' w/ ADJACENT RESIDENTIAL)
MAXIMUM HT: 35'

CERTIFICATION OF OWNERSHIP AND DEDICATION

I HEREBY CERTIFY THAT I AM THE OWNER OF THE PROPERTY SHOWN AND DESCRIBED HEREON, WHICH IS LOCATED IN THE SUBDIVISION JURISDICTION OF HARNETT COUNTY, NORTH CAROLINA AND THAT I HERE ADOPT THIS PLAN OF SUBDIVISION WITH MY FREE CONSENT, ESTABLISH MINIMUM BUILDING SETBACK LINES, AND DEDICATE ALL STREETS, ALLEYS, WALKS, PARKS, AND OTHER SITES AND EASEMENTS TO PUBLIC OR PRIVATE USE AS NOTED. FURTHERMORE, I HEREBY DEDICATE ALL SANITARY SEWER AND WATER LINES TO THE COUNTY OF HARNETT.

0□.1□.2025

OWNER: JPF PROPERTIES DATE

The Harnett County Development Review Board has approved this Site Plan. This project is subject to all federal, state, and local government regulations and 09/18/2025 **applicable expiration periods.**

I HEREBY CERTIFY THAT THE DEVELOPMENT HEREON HAS BEEN GRANTED PRELIMIN ARY APPROVAL BY THE HARNETT COUNTY DEVELOPMENT REVIEW BOARD PURSUANT TO THE REGULATIONS SET FOR BY E-□11 ADDRESSING, ENVIRONMENTAL HEALTH, FIRE MARSHAL, PLANNING, AND PUBLIC UTILITIES OF HARNETT COUNTY, NC, SUBJECT TO RECORDATION IN THE HARNETT COUNTY OFFICE OF REGISTER OF DEEDS WITHIN THIRTY DAYS OF THE DATE BELOW.

DEVELOPMENT REVIEW BOARD CHAIRMAN DATE

TEMPORARY DIVERSION BERM (TDB) (7 DAY STABILIZATION TIME FRAME)
TEMPORARY SILT FENCE (TSF)
LIMITS OF DISTURBED AREA
TOTAL DISTURBED AREA=0.8 ACRES
EXISTING CONTOUR
FINISH GRADE CONTOUR
TEMP. ROCK CHECK DAM (TRCD)

BOUNDARY & TOPOGRAPHIC SURVEY PROVIDED BY:
ON THE LEVEL SURVEYING
JAMES LONNIE PEACOCK, PLS
FIRM # P-2158
NC REG. LAND SURVEYOR NO. L-5141
1646 DENNING RD. BENSON, N.C 27504
TELEPHONE: 919-422-3580

GRAPHIC SCALE
50 0 25 50 100 200
(IN FEET)
1 inch = 50 ft.

DocuSigned by:
B2F63A58E356433...
NORTH CAROLINA PROFESSIONAL SEAL 024441 ENGINEER PETER FLEET TEMPLE NORFLEET
09/02/2025

ALL CONSTRUCTION MUST CONFORM TO THE UNDERGROUND UTILITY PROTECTION ACT
BEFORE YOU DIG! CONTACT ONE-CALL CENTER 1-800-632-4949 or 811

LOCATION:
SR 1709 - HODGES CHAPEL RD.
AVERASBORO TOWNSHIP
HARNETT COUNTY

PROPERTY OWNER/DEVELOPER:
JPF PROPERTIES LLC
PO BOX 1207
DUNN, NC 28335-1207

REVISIONS
07.09.2025: HRW SUBMITTAL
09.02.2025: HRW COMMENTS

FLEET TEMPLE ENGINEERING PLLC
5245 Red Hill Church Road • Coats, NC 27521
910.658.2446 • fleet@ftempleengineering.com • P-2357

SITE, GRADING, DRAINAGE, AND EROSION CONTROL PLAN
FOR
PJ'S TRUCK BODIES

HORIZONTAL SCALE: 1" = 50'
VERTICAL SCALE: N/A
DATE: 06.26.2024
FTE JOB# 0069
C1.0

NOTE: This document, in physical or electronic form, discloses subject matter considered confidential to FLEET TEMPLE ENGINEERING, PLLC and on which FLEET TEMPLE ENGINEERING, PLLC has exclusive property rights. Neither receipt nor possession thereof confers or transfers any rights to reproduce this document or any part thereof, or to disclose any information contained therein to others, or to use it for any purpose without the written permission of FLEET TEMPLE ENGINEERING, PLLC

GROUND STABILIZATION AND MATERIALS HANDLING PRACTICES FOR COMPLIANCE WITH THE NCG01 CONSTRUCTION GENERAL PERMIT

Implementing the details and specifications on this plan sheet will result in the construction activity being considered compliant with the Ground Stabilization and Materials Handling sections of the NCG01 Construction General Permit (Sections E and F, respectively). The permittee shall comply with the Erosion and Sediment Control plan approved by the delegated authority having jurisdiction. All details and specifications shown on this sheet may not apply depending on site conditions and the delegated authority having jurisdiction.

SECTION E: GROUND STABILIZATION

Required Ground Stabilization Timeframes

Site Area Description	Stabilize within this many calendar days after ceasing land disturbance	Timeframe variations
(a) Perimeter dikes, swales, ditches, and perimeter slopes	7	None
(b) High Quality Water (HQW) Zones	7	None
(c) Slopes steeper than 3:1	7	If slopes are 10' or less in length and are not steeper than 2:1, 14 days are allowed
(d) Slopes 3:1 to 4:1	14	-7 days for slopes greater than 50' in length and with slopes steeper than 4:1 -7 days for perimeter dikes, swales, ditches, perimeter slopes and HQW Zones -10 days for Falls Lake Watershed
(e) Areas with slopes flatter than 4:1	14	-7 days for perimeter dikes, swales, ditches, perimeter slopes and HQW Zones -10 days for Falls Lake Watershed unless there is zero slope

Note: After the permanent cessation of construction activities, any areas with temporary ground stabilization shall be converted to permanent ground stabilization as soon as practicable but in no case longer than 90 calendar days after the last land disturbing activity. Temporary ground stabilization shall be maintained in a manner to render the surface stable against accelerated erosion until permanent ground stabilization is achieved.

GROUND STABILIZATION SPECIFICATION

Stabilize the ground sufficiently so that rain will not dislodge the soil. Use one of the techniques in the table below:

Temporary Stabilization	Permanent Stabilization
• Temporary grass seed covered with straw or other mulches and tackifiers • Hydroseeding • Rolled erosion control products with or without temporary grass seed • Appropriately applied straw or other mulch • Plastic sheeting	• Permanent grass seed covered with straw or other mulches and tackifiers • Geotextile fabrics such as permanent soil reinforcement matting • Hydroseeding • Shrubs or other permanent plantings covered with mulch • Uniform and evenly distributed ground cover sufficient to restrain erosion • Structural methods such as concrete, asphalt or retaining walls • Rolled erosion control products with grass seed

POLYACRYLAMIDES (PAMS) AND FLOCCULANTS

1. Select flocculants that are appropriate for the soils being exposed during construction, selecting from the NC DWR List of Approved PAMS/Flocculants.
2. Apply flocculants at or before the inlets to Erosion and Sediment Control Measures.
3. Apply flocculants at the concentrations specified in the *NC DWR List of Approved PAMS/Flocculants* and in accordance with the manufacturer's instructions.
4. Provide ponding area for containment of treated Stormwater before discharging offsite.
5. Store flocculants in leak-proof containers that are kept under storm-resistant cover or surrounded by secondary containment structures.

EQUIPMENT AND VEHICLE MAINTENANCE

1. Maintain vehicles and equipment to prevent discharge of fluids.
2. Provide drip pans under any stored equipment.
3. Identify leaks and repair as soon as feasible, or remove leaking equipment from the project.
4. Collect all spent fluids, store in separate containers and properly dispose as hazardous waste (recycle when possible).
5. Remove leaking vehicles and construction equipment from service until the problem has been corrected.
6. Bring used fuels, lubricants, coolants, hydraulic fluids and other petroleum products to a recycling or disposal center that handles these materials.

LITTER, BUILDING MATERIAL AND LAND CLEARING WASTE

1. Never bury or burn waste. Place litter and debris in approved waste containers.
2. Provide a sufficient number and size of waste containers (e.g dumpster, trash receptacle) on site to contain construction and domestic wastes.
3. Locate waste containers at least 50 feet away from storm drain inlets and surface waters unless no other alternatives are reasonably available.
4. Locate waste containers on areas that do not receive substantial amounts of runoff from upland areas and does not drain directly to a storm drain, stream or wetland.
5. Cover waste containers at the end of each workday and before storm events or provide secondary containment. Repair or replace damaged waste containers.
6. Anchor all lightweight items in waste containers during times of high winds.
7. Empty waste containers as needed to prevent overflow. Clean up immediately if containers overflow.
8. Dispose waste off-site at an approved disposal facility.
9. On business days, clean up and dispose of waste in designated waste containers.

PAINT AND OTHER LIQUID WASTE

1. Do not dump paint and other liquid waste into storm drains, streams or wetlands.
2. Locate paint washouts at least 50 feet away from storm drain inlets and surface waters unless no other alternatives are reasonably available.
3. Contain liquid wastes in a controlled area.
4. Containment must be labeled, sized and placed appropriately for the needs of site.
5. Prevent the discharge of soaps, solvents, detergents and other liquid wastes from construction sites.

PORTABLE TOILETS

1. Install portable toilets on level ground, at least 50 feet away from storm drains, streams or wetlands unless there is no alternative reasonably available. If 50 foot offset is not attainable, provide relocation of portable toilet behind silt fence or place on a gravel pad and surround with sand bags.
2. Provide staking or anchoring of portable toilets during periods of high winds or in high foot traffic areas.
3. Monitor portable toilets for leaking and properly dispose of any leaked material. Utilize a licensed sanitary waste hauler to remove leaking portable toilets and replace with properly operating unit.

EARTHEN STOCKPILE MANAGEMENT

1. Show stockpile locations on plans. Locate earthen-material stockpile areas at least 50 feet away from storm drain inlets, sediment basins, perimeter sediment controls and surface waters unless it can be shown no other alternatives are reasonably available.
2. Protect stockpile with silt fence installed along toe of slope with a minimum offset of five feet from the toe of stockpile.
3. Provide stable stone access point when feasible.
4. Stabilize stockpile within the timeframes provided on this sheet and in accordance with the approved plan and any additional requirements. Soil stabilization is defined as vegetative, physical or chemical coverage techniques that will restrain accelerated erosion on disturbed soils for temporary or permanent control needs.

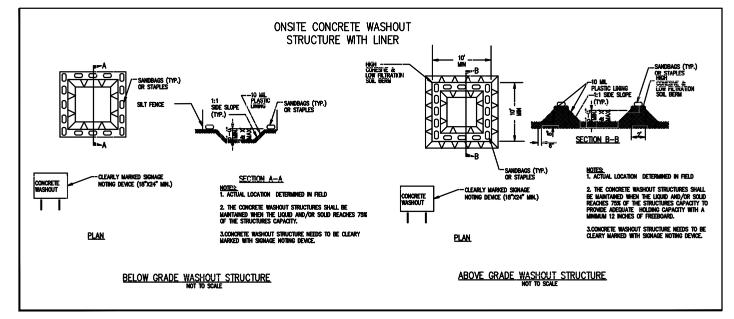

CONCRETE WASHOUTS

1. Do not discharge concrete or cement slurry from the site.
2. Dispose of, or recycle settled, hardened concrete residue in accordance with local and state solid waste regulations and at an approved facility.
3. Manage washout from mortar mixers in accordance with the above item and in addition place the mixer and associated materials on impervious barrier and within lot perimeter silt fence.
4. Install temporary concrete washouts per local requirements, where applicable. If an alternate method or product is to be used, contact your approval authority for review and approval. If local standard details are not available, use one of the two types of temporary concrete washouts provided on this detail.
5. Do not use concrete washouts for dewatering or storing defective curb or sidewalk sections. Stormwater accumulated within the washout may not be pumped into or discharged to the storm drain system or receiving surface waters. Liquid waste must be pumped out and removed from project.
6. Locate washouts at least 50 feet from storm drain inlets and surface waters unless it can be shown that no other alternatives are reasonably available. At a minimum, install protection of storm drain inlet(s) closest to the washout which could receive spills or overflow.
7. Locate washouts in an easily accessible area, on level ground and install a stone entrance pad in front of the washout. Additional controls may be required by the approving authority.
8. Install at least one sign directing concrete trucks to the washout within the project limits. Post signage on the washout itself to identify this location.
9. Remove leavings from the washout when at approximately 75% capacity to limit overflow events. Replace the tarp, sand bags or other temporary structural components when no longer functional. When utilizing alternative or proprietary products, follow manufacturer's instructions.
10. At the completion of the concrete work, remove remaining leavings and dispose of in an approved disposal facility. Fill pit, if applicable, and stabilize any disturbance caused by removal of washout.

HERBICIDES, PESTICIDES AND RODENTICIDES

1. Store and apply herbicides, pesticides and rodenticides in accordance with label restrictions.
2. Store herbicides, pesticides and rodenticides in their original containers with the label, which lists directions for use, ingredients and first aid steps in case of accidental poisoning.
3. Do not store herbicides, pesticides and rodenticides in areas where flooding is possible or where they may spill or leak into wells, stormwater drains, ground water or surface water. If a spill occurs, clean area immediately.
4. Do not stockpile these materials onsite.

HAZARDOUS AND TOXIC WASTE

1. Create designated hazardous waste collection areas on-site.
2. Place hazardous waste containers under cover or in secondary containment.
3. Do not store hazardous chemicals, drums or bagged materials directly on the ground.

NCG01 GROUND STABILIZATION AND MATERIALS HANDLING

EFFECTIVE: 04/01/19

PART III
SELF-INSPECTION, RECORDKEEPING AND REPORTING

SECTION A: SELF-INSPECTION

Self-inspections are required during normal business hours in accordance with the table below. When adverse weather or site conditions would cause the safety of the inspection personnel to be in jeopardy, the inspection may be delayed until the next business day on which it is safe to perform the inspection. In addition, when a storm event of equal to or greater than 1.0 inch occurs outside of normal business hours, the self-inspection shall be performed upon the commencement of the next business day. Any time when inspections were delayed shall be noted in the Inspection Record.

Inspect	Frequency (during normal business hours)	Inspection records must include:
(1) Rain gauge maintained in good working order	Daily	Daily rainfall amounts. If no daily rain gauge observations are made during weekend or holiday periods, and no individual-day rainfall information is available, record the cumulative rain measurement for those unattended days (and this will determine if a site inspection is needed). Days on which no rainfall occurred shall be recorded as "zero." The permittee may use another rain-monitoring device approved by the Division.
(2) E&SC Measures	At least once per 7 calendar days and within 24 hours of a rain event ≥ 1.0 inch in 24 hours	1. Identification of the measures inspected, 2. Date and time of the inspection, 3. Name of the person performing the inspection, 4. Indication of whether the measures were operating properly, 5. Description of maintenance needs for the measure, 6. Description, evidence, and date of corrective actions taken.
(3) Stormwater discharge outfalls (SDOs)	At least once per 7 calendar days and within 24 hours of a rain event ≥ 1.0 inch in 24 hours	1. Identification of the discharge outfalls inspected, 2. Date and time of the inspection, 3. Name of the person performing the inspection, 4. Evidence of indicators of stormwater pollution such as oil sheen, floating or suspended solids or discoloration, 5. Indication of visible sediment leaving the site, 6. Description, evidence, and date of corrective actions taken.
(4) Perimeter of site	At least once per 7 calendar days and within 24 hours of a rain event ≥ 1.0 inch in 24 hours	If visible sedimentation is found outside site limits, then a record of the following shall be made: 1. Actions taken to clean up or stabilize the sediment that has left the site limits, 2. Description, evidence, and date of corrective actions taken, and 3. An explanation as to the actions taken to control future releases.
(5) Streams or wetlands onsite or offsite (where accessible)	At least once per 7 calendar days and within 24 hours of a rain event ≥ 1.0 inch in 24 hours	If the stream or wetland has increased visible sedimentation or a stream has visible increased turbidity from the construction activity, then a record of the following shall be made: 1. Description, evidence and date of corrective actions taken, and 2. Records of the required reports to the appropriate Division Regional Office per Part III, Section C, Item (2)(a) of this permit.
(6) Ground stabilization measures	After each phase of grading	1. The phase of grading (installation of perimeter E&SC measures, clearing and grubbing, installation of storm drainage facilities, completion of all land-disturbing activity, construction or redevelopment, permanent ground cover). 2. Documentation that the required ground stabilization measures have been provided within the required timeframe or an assurance that they will be provided as soon as possible.

NOTE: The rain inspection resets the required 7 calendar day inspection requirement.

PART III
SELF-INSPECTION, RECORDKEEPING AND REPORTING

SECTION B: RECORDKEEPING

1. E&SC Plan Documentation

The approved E&SC plan as well as any approved deviation shall be kept on the site. The approved E&SC plan must be kept up-to-date throughout the coverage under this permit. The following items pertaining to the E&SC plan shall be kept on site and available for inspection at all times during normal business hours.

Item to Document	Documentation Requirements
(a) Each E&SC measure has been installed and does not significantly deviate from the locations, dimensions and relative elevations shown on the approved E&SC plan.	Initial and date each E&SC measure on a copy of the approved E&SC plan or complete, date and sign an inspection report that lists each E&SC measure shown on the approved E&SC plan. This documentation is required upon the initial installation of the E&SC measures or if the E&SC measures are modified after initial installation.
(b) A phase of grading has been completed.	Initial and date a copy of the approved E&SC plan or complete, date and sign an inspection report to indicate completion of the construction phase.
(c) Ground cover is located and installed in accordance with the approved E&SC plan.	Initial and date a copy of the approved E&SC plan or complete, date and sign an inspection report to indicate compliance with approved ground cover specifications.
(d) The maintenance and repair requirements for all E&SC measures have been performed.	Complete, date and sign an inspection report.
(e) Corrective actions have been taken to E&SC measures.	Initial and date a copy of the approved E&SC plan or complete, date and sign an inspection report to indicate the completion of the corrective action.

2. Additional Documentation to be Kept on Site

In addition to the E&SC plan documents above, the following items shall be kept on the site and available for inspectors at all times during normal business hours, unless the Division provides a site-specific exemption based on unique site conditions that make this requirement not practical:

(a) This General Permit as well as the Certificate of Coverage, after it is received.

(b) Records of inspections made during the previous twelve months. The permittee shall record the required observations on the Inspection Record Form provided by the Division or a similar inspection form that includes all the required elements. Use of electronically-available records in lieu of the required paper copies will be allowed if shown to provide equal access and utility as the hard-copy records.

3. Documentation to be Retained for Three Years

All data used to complete the e-NOI and all inspection records shall be maintained for a period of three years after project completion and made available upon request. [40 CFR 122.41]

PART III
SELF-INSPECTION, RECORDKEEPING AND REPORTING

SECTION C: REPORTING

1. Occurrences that Must be Reported

Permittees shall report the following occurrences:

(a) Visible sediment deposition in a stream or wetland.

(b) Oil spills if:
- They are 25 gallons or more,
- They are less than 25 gallons but cannot be cleaned up within 24 hours,
- They cause sheen on surface waters (regardless of volume), or
- They are within 100 feet of surface waters (regardless of volume).

(c) Releases of hazardous substances in excess of reportable quantities under Section 311 of the Clean Water Act (Ref: 40 CFR 110.3 and 40 CFR 117.3) or Section 102 of CERCLA (Ref: 40 CFR 302.4) or G.S. 143-215.85.

(d) Anticipated bypasses and unanticipated bypasses.

(e) Noncompliance with the conditions of this permit that may endanger health or the environment.

2. Reporting Timeframes and Other Requirements

After a permittee becomes aware of an occurrence that must be reported, he shall contact the appropriate Division regional office within the timeframes and in accordance with the other requirements listed below. Occurrences outside normal business hours may also be reported to the Department's Environmental Emergency Center personnel at (800) 858-0368.

Occurrence	Reporting Timeframes (After Discovery) and Other Requirements
(a) Visible sediment deposition in a stream or wetland	• ***Within 24 hours***, an oral or electronic notification. • ***Within 7 calendar days***, a report that contains a description of the sediment and actions taken to address the cause of the deposition. Division staff may waive the requirement for a written report on a case-by-case basis. • If the stream is named on the NC 303(d) list as impaired for sediment-related causes, the permittee may be required to perform additional monitoring, inspections or apply more stringent practices if staff determine that additional requirements are needed to assure compliance with the federal or state impaired-waters conditions.
(b) Oil spills and release of hazardous substances per Item 1(b)-(c) above	• ***Within 24 hours***, an oral or electronic notification. The notification shall include information about the date, time, nature, volume and location of the spill or release.
(c) Anticipated bypasses [40 CFR 122.41(m)(3)]	• ***A report at least ten days before the date of the bypass, if possible.*** The report shall include an evaluation of the anticipated quality and effect of the bypass.
(d) Unanticipated bypasses [40 CFR 122.41(m)(3)]	• ***Within 24 hours***, an oral or electronic notification. • ***Within 7 calendar days,*** a report that includes an evaluation of the quality and effect of the bypass.
(e) Noncompliance with the conditions of this permit that may endanger health or the environment[40 CFR 122.41(l)(7)]	• ***Within 24 hours***, an oral or electronic notification. • ***Within 7 calendar days***, a report that contains a description of the noncompliance, and its causes; the period of noncompliance, including exact dates and times, and if the noncompliance has not been corrected, the anticipated time noncompliance is expected to continue; and steps taken or planned to reduce, eliminate, and prevent reoccurrence of the noncompliance. [40 CFR 122.41(l)(6). • Division staff may waive the requirement for a written report on a case-by-case basis.

PART II, SECTION G, ITEM (4)
DRAW DOWN OF SEDIMENT BASINS FOR MAINTENANCE OR CLOSE OUT

Sediment basins and traps that receive runoff from drainage areas of one acre or more shall use outlet structures that withdraw water from the surface when these devices need to be drawn down for maintenance or close out unless this is infeasible. The circumstances in which it is not feasible to withdraw water from the surface shall be rare (for example, times with extended cold weather). Non-surface withdrawals from sediment basins shall be allowed only when all of the following criteria have been met:

(a) The E&SC plan authority has been provided with documentation of the non-surface withdrawal and the specific time periods or conditions in which it will occur. The non-surface withdrawal shall not commence until the E&SC plan authority has approved these items,
(b) The non-surface withdrawal has been reported as an anticipated bypass in accordance with Part III, Section C, Item (2)(c) and (d) of this permit,
(c) Dewatering discharges are treated with controls to minimize discharges of pollutants from stormwater that is removed from the sediment basin. Examples of appropriate controls include properly sited, designed and maintained dewatering tanks, weir tanks, and filtration systems,
(d) Vegetated, upland areas of the sites or a properly designed stone pad is used to the extent feasible at the outlet of the dewatering treatment devices described in Item (c) above,
(e) Velocity dissipation devices such as check dams, sediment traps, and riprap are provided at the discharge points of all dewatering devices, and
(f) Sediment removed from the dewatering treatment devices described in Item (c) above is disposed of in a manner that does not cause deposition of sediment into waters of the United States.

NCG01 SELF-INSPECTION, RECORDKEEPING AND REPORTING

EFFECTIVE: 04/01/19

SITE

VICINITY MAP
(NTS)

OWNER/DEVELOPER
CAVINESS LAND DEVELOPMENT, INC.
1041B ROBESON ST.
FAYETTEVILLE, NC 28305

LOT 2
PIN 163000–58–7923
DEED BOOK 6111, PAGE 468
DISTURBED AREA: 0.38 ACRES

LOT 3
PIN 163000–58–8913
DEED BOOK 6111, PAGE 468
DISTURBED AREA: 0.39 ACRES

LOT 12
PIN 163000–68–6918
DEED BOOK 6111, PAGE 554
DISTURBED AREA: 0.54 ACRES

LOT 31
PIN 163000–69–3552
DEED BOOK 6111, PAGE 554
DISTURBED AREA: 0.61 ACRES

TOTAL LAND DISTURBANCE: 1.92 ACRES

ZONED: RA

SETBACKS:
FRONT – 21'
SIDE – 9'
SIDE(TOTAL) – 15'
SIDE(CORNER) – 15'
REAR – 18'

ALL LOTS SHALL BE SERVED BY JOHNSTON COUNTY MUNICIPAL WATER AND INDIVIDUAL SEPTIC SYSTEMS.

CONSTRUCTION SEQUENCE

1) INSTALL THE TEMPORARY CONSTRUCTION ENTRANCE.
2) INSTALL EROSION CONTROL MEASURES AS SHOWN ON PLANS.
3) COMPLETE INSTALLATION OF SITE DRAINAGE NETWORKS AND SITE SWALES WITH ASSOCIATED EROSION CONTROL PROTECTION BEFORE BEGINNING SITE GRADING.
4) STRIP TOPSOIL.
5) GRADE SITE.
6) GRASS AREAS THAT WILL NOT BE DISTURBED.
7) INSTALL UTILITIES.
7) PLACE BASE–COURSE.
8) SEED AND MULCH ALL AREAS TO PROVIDE PERMANENT GROUNDCOVER WITHIN 14 WORKING DAYS FOLLOWING COMPLETION OF ANY PHASE OF GRADING AND WITHIN 14 WORKING DAYS OR 90 CALENDAR DAYS, WHICHEVER PERIOD IS SHORTER, FOLLOWING COMPLETION OF CONSTRUCTION OR DEVELOPMENT.
9) MAINTAIN ALL TEMPORARY MEASURES UNTIL PERMANENT GROUND COVER IS ESTABLISHED.
10) NO SEDIMENT OR EROSION CONTROL MEASURES ARE TO BE REMOVED WITHOUT THE APPROVAL OF A JCPU INSPECTOR.

PURSUANT TO G.S. 143–215.1 ALL PERIMETER DIKES, SWALES, DITCHES, PERIMETER SLOPES AND ALL SLOPES GREATER THAN 3 HORIZONTAL TO 1 VERTICAL (3:1) SHALL BE PROVIDED TEMPORARY OR PERMANENT STABILIZATION WITH GROUND COVER AS SOON AS PRACTICABLE BUT IN ANY EVENT WITHIN 7 CALENDAR DAYS FROM THE LAST LAND DISTURBING ACTIVITY.

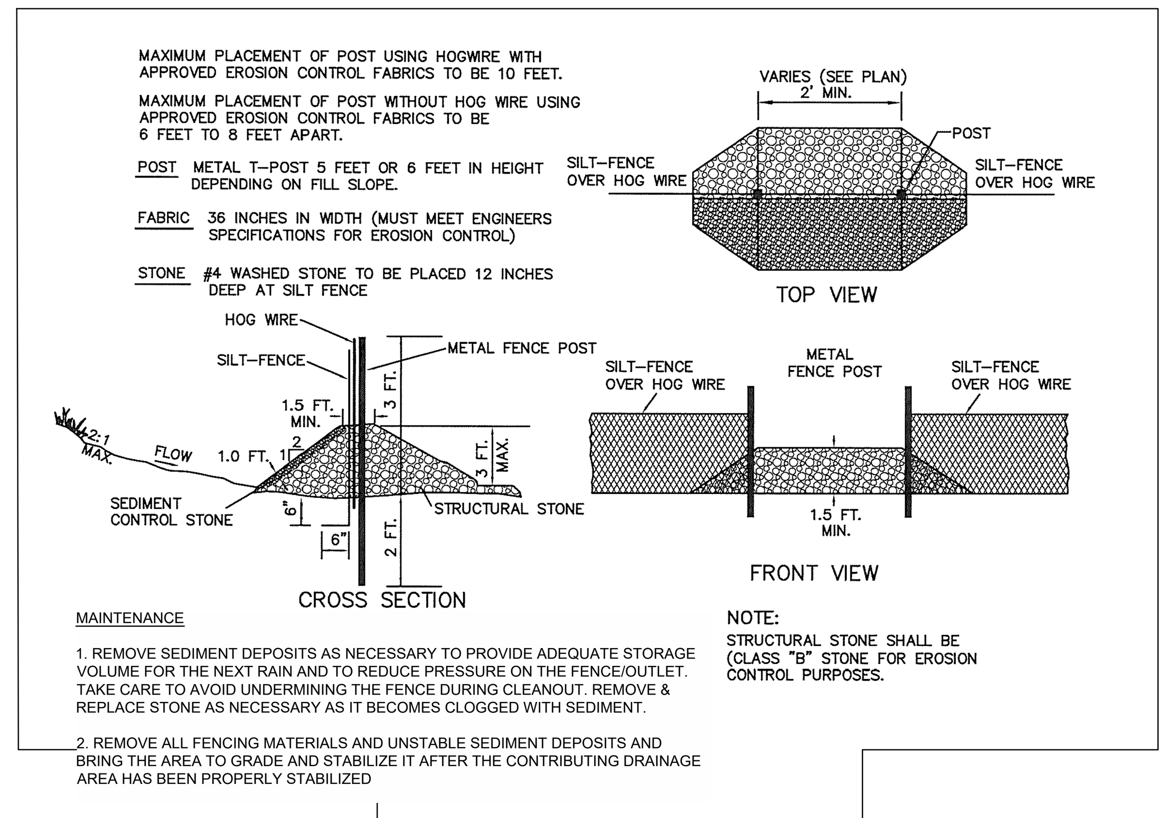

MAINTENANCE

1. REMOVE SEDIMENT DEPOSITS AS NECESSARY TO PROVIDE ADEQUATE STORAGE VOLUME FOR THE NEXT RAIN AND TO REDUCE PRESSURE ON THE FENCE/OUTLET. TAKE CARE TO AVOID UNDERMINING THE FENCE DURING CLEANOUT. REMOVE & REPLACE STONE AS NECESSARY AS IT BECOMES CLOGGED WITH SEDIMENT.

2. REMOVE ALL FENCING MATERIALS AND UNSTABLE SEDIMENT DEPOSITS AND BRING THE AREA TO GRADE AND STABILIZE IT AFTER THE CONTRIBUTING DRAINAGE AREA HAS BEEN PROPERLY STABILIZED

TEMPORARY STONE OUTLET
FOR SILT FENCE

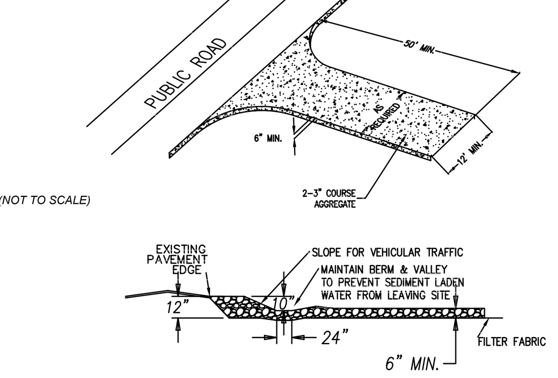

(NOT TO SCALE)

TEMPORARY CONSTRUCTION ENTRANCE

DESIGN CRITERIA

AGGREGATE SIZE - USE 2-3 INCH WASHED STONE.

DIMENSIONS OF GRAVEL PAD:
THICKNESS: 6 INCHES MINIMUM
WIDTH: 12-FEET MINIMUM OR FULL WIDTH AT ALL POINTS OF THE VEHICULAR ENTRANCE AND EXIT AREA, WHICHEVER IF GREATER
LENGTH: 50-FEET MINIMUM

LOCATION - LOCATE CONSTRUCTION ENTRANCES AND EXITS TO LIMIT SEDIMENT FROM LEAVING THE SITE AND TO PROVIDE FOR MAXIMUM UTILITY BY ALL CONSTRUCTION VEHICLES. AVOID STEEP GRADES, AND ENTRANCES AT CURVES IN PUBLIC ROADS.

WASHING - IF CONDITIONS AT THE SITE ARE SUCH THAT MOST OF THE MUD AND SEDIMENT ARE NOT REMOVED BY VEHICLES TRAVELING OVER THE GRAVEL, THE TIRES SHOULD BE WASHED. WASHING SHOULD BE DONE ON AN AREA STABILIZED WITH CRUSHED STONE THAT DRAINS INTO A SEDIMENT TRAP OR OTHER SUITABLE DISPOSAL AREA. A WASH RACK MAY ALSO BE USED TO MAKE WASHING MORE CONVENIENT AND EFFECTIVE.

CONSTRUCTION SPECIFICATIONS

1. CLEAR THE ENTRANCE AND EXIT AREA OF ALL VEGETATION, ROOTS, AND OTHER OBJECTIONABLE MATERIAL AND PROPERLY GRADE IT.
2. PLACE THE GRAVEL TO THE SPECIFIC GRADE AND DIMENSIONS SHOWN ON THE PLANS, AND SMOOTH IT.
3. PROVIDE DRAINAGE TO CARRY WATER TO SEDIMENT TRAP OR OTHER SUITABLE OUTLET.
4. USE GEOTEXTILE FABRICS BECAUSE THEY IMPROVE STABILITY OF THE FOUNDATION IN LOCATIONS SUBJECT TO SEEPAGE OR HIGH WATER TABLE.

MAINTENANCE

MAINTAIN THE GRAVEL PAD IN A CONDITION TO PREVENT MUD OR SEDIMENT FROM LEAVING THE CONSTRUCTION SITE. THIS MAY REQUIRE PERIODIC TOPDRESSING WITH 2-INCH STONE. AFTER EACH RAINFALL, INSPECT ANY STRUCUTRE USED TO TRAP SEDIMENT AND CLEAN IT OUT AS NECESSARY. IMMEDIATELY REMOVE ALL OBJECTIONABLE MATERIALS SPILLED, WASHED, OR TRACKED ONTO PUBLIC ROADWAYS.

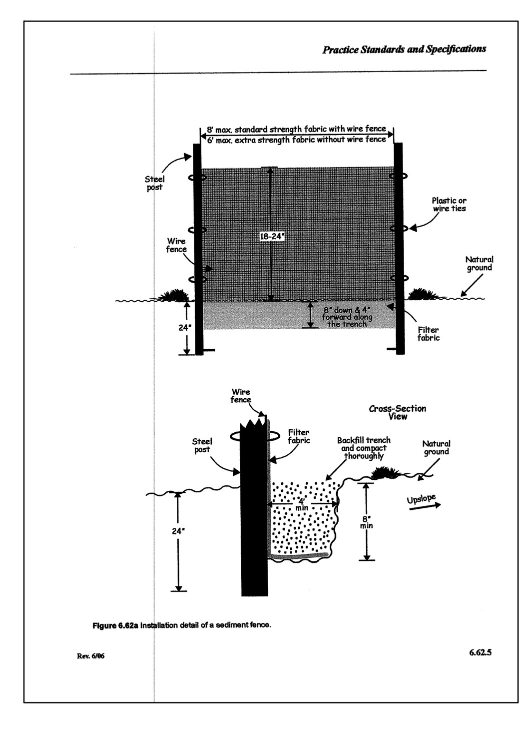

SILT FENCE DETAIL

(NOT TO SCALE)

CONSTRUCTION

1. CONSTRUCT THE SEDIMENT BARRIER OF STANDARD STRENGTH OR EXTRA STRENGTH SYNTHETIC FILTER FABRICS.
2. ENSURE THAT THE HEIGHT OF THE SEDIMENT FENCE DOES NOT EXCEED 24 INCHES ABOVE THE GROUND SURFACE. (HIGHER FENCES MAY IMPOUND VOLUMES OF WATER SUFFICIENT TO CAUSE FAILURE OF THE STRUCTURE.)
3. CONSTRUCT THE FILTER FABRIC FROM A CONTINUOUS ROLL CUT TO THE LENGTH OF THE BARRIER TO AVOID JOINTS. WHEN JOINTS ARE NECESSARY, SECURELY FASTEN THE FILTER CLOTH ONLY AT A SUPPORT POST WITH 4 FEET MINIMUM OVERLAP TO THE NEXT POST.
4. SUPPORT STANDARD STRENGTH FILTER FABRIC BY WIRE MESH FASTENED SECURELY TO THE UPSLOPE SIDE OF THE POSTS. EXTEND THE WIRE MESH SUPPORT TO THT BOTTOM OF THE TRENCH. FASTEN THE WIRE REINFORCEMENT, THEN FABRIC ON THE UPSLOPE SIDE OF THE FENCE POST. WIRE OR PLASTIC ZIP TIES SHOULD HAVE MINIMUM 50 POUND TENSILE STRENGTH.
5. WHEN A WIRE MESH SUPPORT FENCE IS USED, SPACE POSTS A MAXIMUM OF 8 FEET APART. SUPPORT POSTS SHOULD BE DRIVEN SECURELY INTO THE GROUND A MINIMUM OF 24 INCHES.
6. EXTRA STRENGTH FILTER FABRIC WITH 6 FEET POST SPACING DOE NOT REQUIRE WIRE MESH SUPPORT FENCE. SECURELY FASTEN THE FILTER FABRIC DIRECTLY TO POSTS. WIRE OR PLASTIC ZIP TIES SHOULD HAVE MINIMUM 50 POUND TENSILE STRENGTH.
7. EXCAVATE A TRENCH APPROXIMATELY 4 INCHES WIDE AND 8 INCHES DEEP ALONG THE PROPOSED LINE OF POSTS AND UPSLOPE FROM THE BARRIER (FIGURE 6.62a).
8. PLACE 12 INCHES OF THE FABRIC ALONG THE BOTTOM AND SIDE OF THE TRENCH.
9. BACKFILL THE TRENCH WITH SOIL PLACED OVER THE FILTER FABRIC AND COMPACT. THOROUGH COMPACTION OF THE BACKFILL IS CRITICAL TO SILT FENCE PERFORMANCE.
10. DO NOT ATTACH FILTER FABRIC TO EXISTING TREES.
11. NO MEASURES ARE TO BE REMOVED UNTIL DENR APPROVAL.

INSTALLATION SPECIFICATIONS

1. THE BASE OF BOTH END POSTS SHOULD BE AT LEAST ONE FOOT HIGHER THAN THE MIDDLE OF THE FENCE. CHECK WITH A LEVEL IF NECESSARY.
2. INSTALL POSTS 4 FEET APART IN CRITICAL AREAS AND 6 FEET APART ON STANDARD APPLICATIONS.
3. INSTALL POSTS 2 FEET DEEP ON THE DOWNSTREAM SIDE OF THE SILT FENCE, AND AS CLOSE AS POSSIBLE TO THE FABRIC, ENABLING POSTS TO SUPPORT THE FABRIC FROM UPSTREAM WATER PRESSURE.
4. INSTALL POSTS WITH THE NIPPLES FACING AWAY FROM THE SILT FABRIC.
5. ATTACH THE FABRIC TO EACH POST WITH THREE TIES, ALL SPACED WITHIN THE TOP 8 INCHES OF FABRIC. ATTACH EACH TIE DIAGONALLY 45 DEGREES THROUGH THE FABRIC, WITH EACH PUNCTURE AT LEAST 1 INCH VERTICALLY APART. ALSO, EACH TIE SHOULD BE POSITIONED TO HANG ON A POST NIPPLE WHEN TIGHTENED TO PREVENT SAGGING.
6. WRAP APPROXIMATELY 6 INCHES OF FABRIC AROUND THE END POSTS AND SECURE WITH 3 TIES.
7. NO MORE THAN 24 INCHES OF A 36 INCH FABRIC IS ALLOWED ABOVE GROUND LEVEL.
8. THE INSTALLATION SHOULD BE CHECKED AND CORRECTED FOR ANY DEVIATIONS BEFORE COMPACTION.
9. COMPACTION IS VITALLY IMPORTANT FOR EFFECTIVE RESULTS. COMPACT THE SOIL IMMEDIATELY NEXT TO THE SILT FENCE FABRIC WITH THE FRONT WHEEL OF THE TRACTOR, SKID STEER, OR ROLLER EXERTING AT LEASY 60 POUNDS PER SQUARE INCH. COMPACT THE UPSTREAM SIDE FIRST, AND THEN EACH SIDE TWICE FOR A TOTAL OF 4 TRIPS.

MAINTENANCE

INSPECT SEDIMENT FENCES AT LEAST ONCE A WEEK AND AFTER EACH RAINFALL. MAKE ANY REQUIRED REPAIRS IMMEDIATELY.

SHOULD THE FABRIC OF A SEDIMENT FENCE COLLAPSE, TEAR, DECOMPOSE, OR BECOME INEFFECTIVE, REPLACE IT PROMPTLY.

REMOVE SEDIMENT DEPOSITS AS NECESSARY TO PROVIDE ADEQUATE STORAGE VOLUME FOR THE NEXT RAIN AND TO REDUCE PRESSURE ON THE FENCE. TAKE CARE TO AVOID UNDERMINING THE FENCE DURING CLEANOUT.

REMOVE ALL FENCING MATERIALS AND UNSTABLE SEDIMENT DEPOSITS AND BRING THE AREA TO GRADE AND STABILIZE IT AFTER THE CONTRIBUTING DRAINAGE AREA HAS BEEN PROPERLY STABILIZED.

MULCHING

IMMEDIATELY AFTER SEED AREA SOWN, MULCH THE ENTIRE AREA EVENLY WITH A LAYER OF WHEAT STRAW TO PROTECT AREA FROM EROSION. MULCH TO BE APPLIED AT A RATE OF 75–100 LBS. PER 1000 SQUARE FEET.

SECURING MULCH:
THE MULCH SHALL BE HELD IN PLACE BY EMULSIFIED ASPHALT BINDER ON SLOPES 2 TO 1 OR STEEPER, OR AS REQUIRED. APPLY ASPHALT AT 0.10 GALLON PER SQUARE YARD. IN HEAVY TRAFFIC AREAS, USE TYPE "RS" OR "CRS" TO MINIMIZE REMOVAL OF TACK COAT. SYNTHETIC BINDERS MAY BE USED AS RECOMMENDED BY THE MANUFACTURER TO ANCHOR THE MULCH.

TEMPORARY CHANNEL LININGS IF REQUIRED SHALL BE INSTALLED IN AREAS AS SHOWN ON PLANS, OR AS REQUIRED TO PREVENT EROSION. LININGS AREA TO BE LEFT IN PLACE THROUGHOUT PERMANENT SEEDING PROCEDURE.

MAINTENANCE

I. TEMPORARY SEEDING:
RESEED AND MULCH AREAS WHERE SEEDLING EMERGENCE IS POOR, OR WHERE EROSION OCCURS, AS SOON AS POSSIBLE. DO NOT MOW. PROTECT FROM TRAFFIC AS MUCH AS POSSIBLE.

II. PERMANENT SEEDING:
GENERALLY, A STAND OF VEGETATION CANNOT BE DETERMINED TO BE FULLY ESTABLISHED UNTIL SOIL COVER HAS BEEN MAINTAINED FOR ONE FULL YEAR FROM PLANTING. INSPECT SEEDED AREAS FOR FAILURE AND MAKE NECESSARY REPAIRS AND RESEEDINGS WITHIN THE SAME SEASON, IF POSSIBLE.

RESEEDING––IF A STAND HAS INADEQUATE COVER, RE–EVALUATE CHOICE OF PLANT MATERIALS AND QUANTITIES OF LIME AND FERTILIZER. RE–ESTABLISH THE STAND AFTER SEEDBED PREPARATION OR OVER–SEED THE STAND. CONSIDER SEEDING TEMPORARY, ANNUAL SPECIES IF THE TIME OF YEAR IS NOT APPROPRIATE FOR PERMANENT SEEDING.

NOTE: Pursuant to G.S. 113A–57(2), the angle for graded slopes and fills shall be no greater than the angle that can be retained by vegetative cover or other adequate erosion–control devices or structures. In any event, slopes left exposed will, within 14 calendar days of completion of any phase of grading be planted or otherwise provided with temporary or permanent ground cover, devices, or structures sufficient to restrain erosion. Pursuant to G.S. 113A–57(3), provisions for permanent ground cover sufficient to restrain erosion must be accomplished for all disturbed areas within 14 working days or 90 calendar days (whichever is shorter) following completion of construction or development.

VEGETATION MANTAINANCE:
IF A STAND HAS INADEQUATE COVER, RE–EVALUATE CHOICE OF PLANT MATERIALS AND QUANTITIES OF LIME AND FERTILIZER. RE–ESTABLISH THE STAND AFTER SEEDBED PREPARATION OR OVER–SEED THE STAND. CONSIDER SEEDING TEMPORARY, ANNUAL SPECIES IF THE TIME OF THE YEAR IS NOT APPROPRIATE FOR PERMANENT SEEDING.

SEEDING SPECIFICATIONS

SEEDBED PREPARATION
THOROUGHLY CULTIVATE LAWN AREAS BY DISCING TO A DEPTH OF 6" AND RAKING THE SURFACE SMOOTH TO REQUIRED GRADES. APPLY 4,000 LBS. OF AGRICULTURAL LIME PER ACRE AND 1,000 LBS. OF 10–10–10 OR EQUIVALENT FERTILIZER PER ACRE.

TEMPORARY SEEDING
WHERE TEMPORARY SEEDING IS REQUIRED PRIOR TO SEEDING OF PERMANENT LAWNS OR FILL SLOPES, PROCEED AS FOLLOWS:

AUG. 15TH–MAR. 1ST	SOW RYE GRAIN AT THE RATE OF 120 LBS. PER ACRE.
MAR. 1ST–AUG. 15TH	SOW GRAIN MILLET AT THE RATE OF 40 LBS. PER ACRE.

PERMANENT SEEDING

SEASON	VARIETY	RATE(LBS/ACRE)
AUG 15 – NOV 1ST	KOREAN LESPEDEZA	50
	OR KOBE LESPEDEZA	50
	AND TALL FESCUE	60
NOV 15 – MARCH 1ST	TALL FESCUE	120
	AND ABRUZZI RYE	25
MARCH 1 – APRIL 15	TALL FESCUE	120
APRIL 15 – JUNE 30	HULLED COMMON BERMUDA	12
JUNE 30 – AUG 15	TALL FESCUE	60
	AND BROWNTOP MILLET	25

NORTH CAROLINA PROFESSIONAL ENGINEER SEAL 024441 PETER NORFLEET TEMPLE
DocuSigned by: B2F63A68E355433...
6/26/2024

ALL CONSTRUCTION MUST CONFORM TO THE UNDERGROUND UTILITY PROTECTION ACT
BEFORE YOU DIG! CONTACT ONE–CALL CENTER 1–800–632–4949

LOCATION:
SR 1709 - HODGES CHAPEL RD.
AVERASBORO TOWNSHIP
HARNETT COUNTY

PROPERTY OWNER/DEVELOPER:
JPF PROPERTIES LLC
PO BOX 1207
DUNN, NC 28335-1207

REVISIONS

FLEET TEMPLE ENGINEERING PLLC
5245 Red Hill Church Road • Coats, NC 27521
910.658.2446 • fleet@ftempleengineering.com • P-2357

DETAILS
FOR
PJ'S TRUCK BODIES

DATE: 06.26.2024
FTE JOB# 0069

C2.0

HORIZONTAL SCALE: N/A
VERTICAL SCALE: N/A

NOTE: This document, in physical or electronic form, discloses subject matter considered confidential to FLEET TEMPLE ENGINEERING, PLLC and on which FLEET TEMPLE ENGINEERING, PLLC has exclusive property rights. Neither receipt nor possession thereof confers or transfers any rights to reproduce this document or any part thereof, or to disclose any information contained therein to others, or to use it for any purpose without the written permission of FLEET TEMPLE ENGINEERING, PLLC

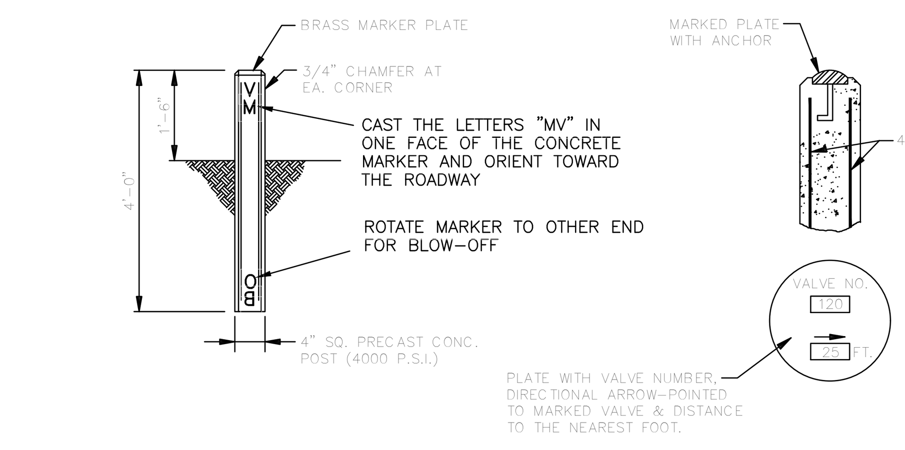

TYPICAL VALVE MARKER DETAIL (W/1)
NO SCALE

NOTES:
PAINT MARKER BLUE AFTER INSTALLATION

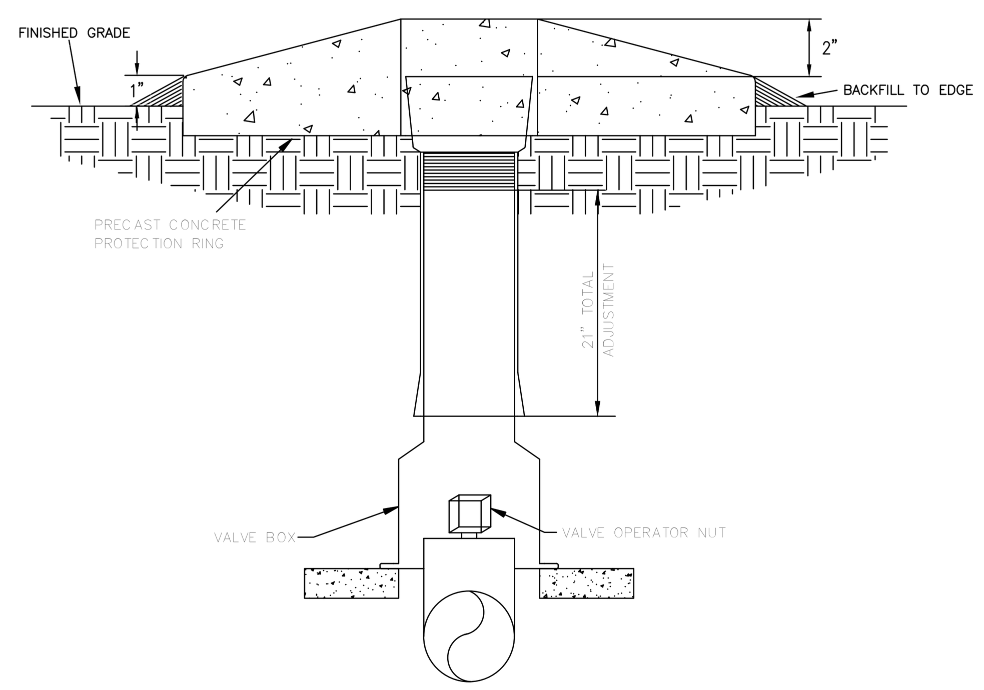

TYPICAL VALVE BOX DETAIL (W/2)
NO SCALE

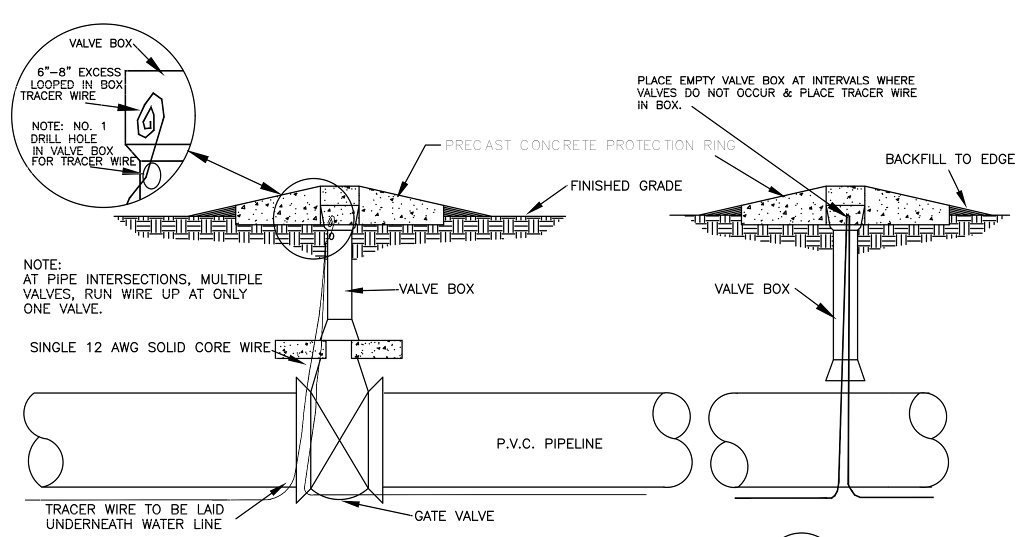

TYPICAL TRACER WIRE INSTALLATION DETAIL (W/3)
NO SCALE

NOTES:
1. DRILL HOLE IN VALVE BOX TO INSERT TRACER WIRE,BRING UP TO INSIDE AND ROLL UP AT LEAST 6"–8" EXCESS
2. PLACE TRACER WIRE IN VALVE BOX AT 1,000' INTERVALS OR AS NOTED ON THE PLANS, TYPICAL.
3. DO NOT SPLICE WIRE WHEN BEGINNING A NEW SPOOL. INSTEAD INSTALL A VALVE BOX AND ATTACH EACH WIRE WITH A BRASS SCREW TO THE VALVE BOX.

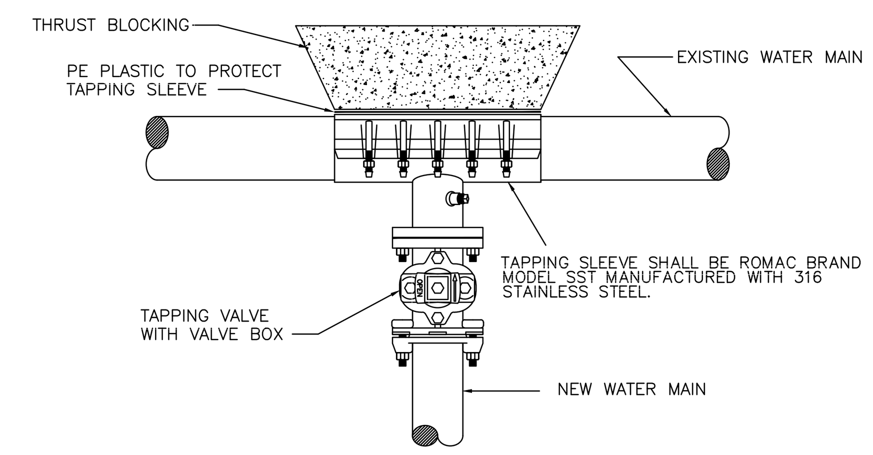

TYPICAL TAPPING SLEEVE AND VALVE ASSEMBLY DETAIL (W/5)
NO SCALE

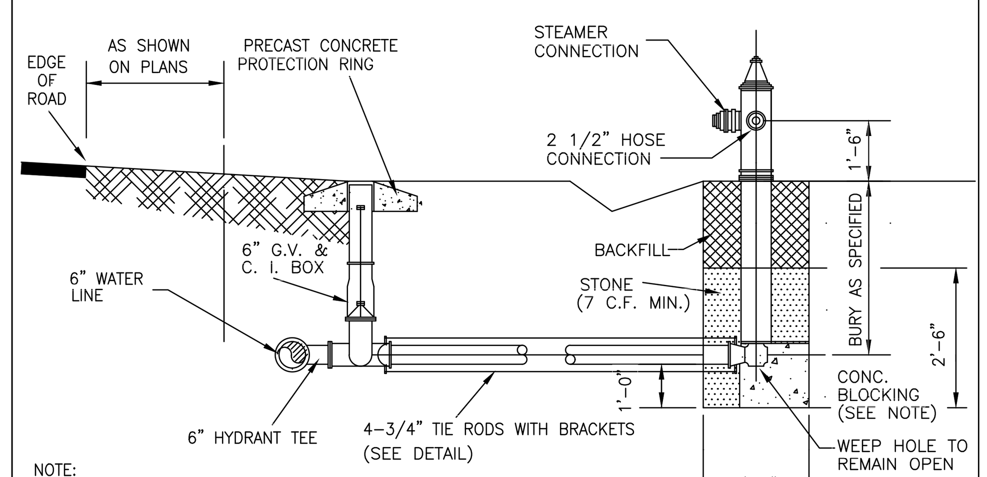

NOTE:
TIE HYDRANT TO MAIN LINE W/TIE RODS IN LIEW OF CONC. BLOCKING IN SANDY SOIL.

TYPICAL FIRE HYDRANT INSTALLATION DETAIL (W/6)
NO SCALE

NOTES:
1. CONCRETE SHALL BE 3,000 PSI MIN.
2. CONCRETE FOR THRUST BLOCKING SHALL BE KEPT FAIRLY DRY, THUS MAKING THE CONCRETE WEDGE SHAPE MORE EASILY FORMED WITH THE WIDEST PART (BLOCKING AREA) AGAINST UNDISTURBED SOIL.
3. NO CONCRETE SHALL COVER ANY BOLTS OR GLANDS.
4. ALL PIPING AND ACCESSORIES TO BE WRAPPED WITH 10 MIL. POLYETHYLENE PRIOR TO POURING BLOCKING.
5. VOLUME OF THRUST BLOCKING SHALL BE AS SHOWN ON THE THRUST BLOCKING SCHEDULE.

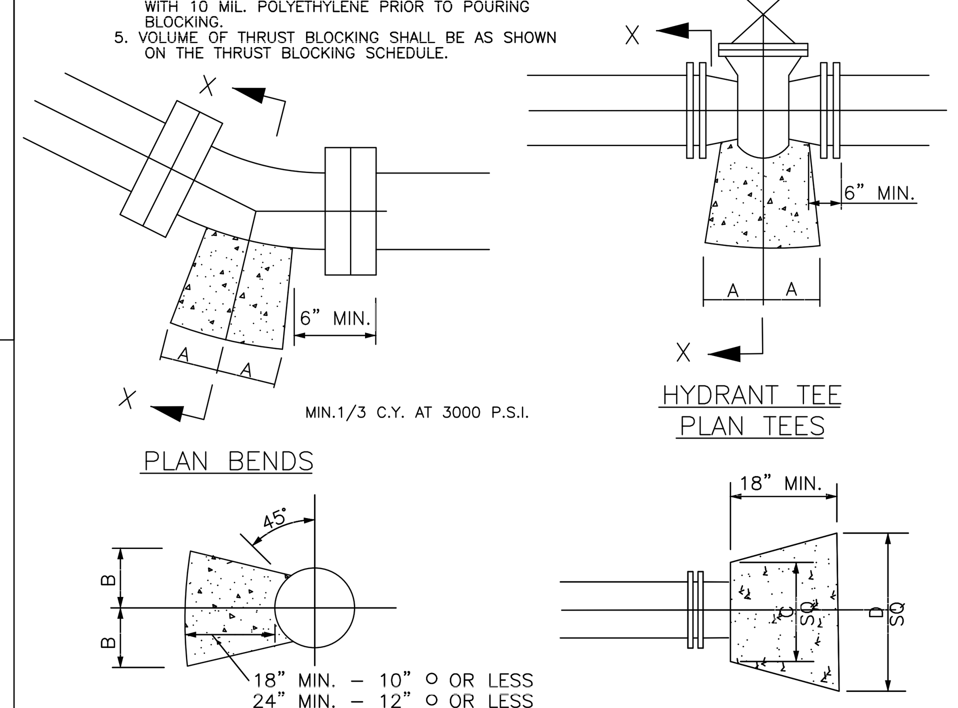

PIPE SIZE	90° BEND		45° BEND		221/2° BEND		11/4° BEND		TEE		PLUG	
	A	B	A	B	A	B	A	B	A	B	C	D
4"	8"	12"	8"	8"	6"	6"	6"	6"	8"	9"	10"	16"
6"	10"	12"	8"	10"	8"	8"	8"	8"	10"	10"	12"	18"
8"	15"	13"	10"	10"	8"	8"	8"	8"	10"	12"	12"	24"
10"	16"	14"	10"	12"	6"	10"	6"	10"	11"	14"	14"	25"
12"	20"	16"	12"	14"	8"	12"	8"	12"	14"	16"	16"	30"
14"	22"	18"	14"	16"	10"	14"	10"	14"	16"	18"	18"	34"
16"	26"	20"	16"	18"	12"	16"	12"	16"	18"	20"	20"	36"

TYPICAL THRUST BLOCK DETAIL (W/7)
NO SCALE

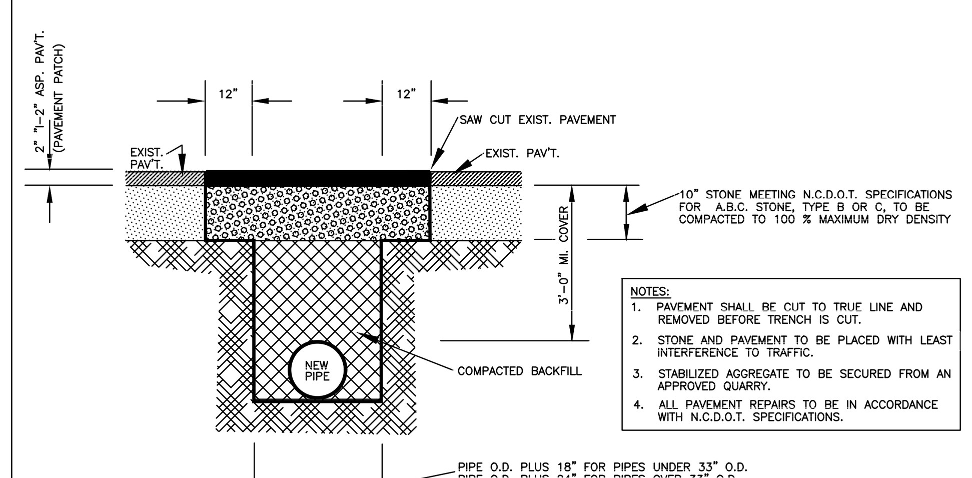

NOTES:
1. PAVEMENT SHALL BE CUT TO TRUE LINE AND REMOVED BEFORE TRENCH IS CUT.
2. STONE AND PAVEMENT TO BE PLACED WITH LEAST INTERFERENCE TO TRAFFIC.
3. STABILIZED AGGREGATE TO BE SECURED FROM AN APPROVED QUARRY.
4. ALL PAVEMENT REPAIRS TO BE IN ACCORDANCE WITH N.C.D.O.T. SPECIFICATIONS.

TYPICAL TRENCH IN BITUMINOUS SURFACE AREAS DETAIL (W/10)
NO SCALE

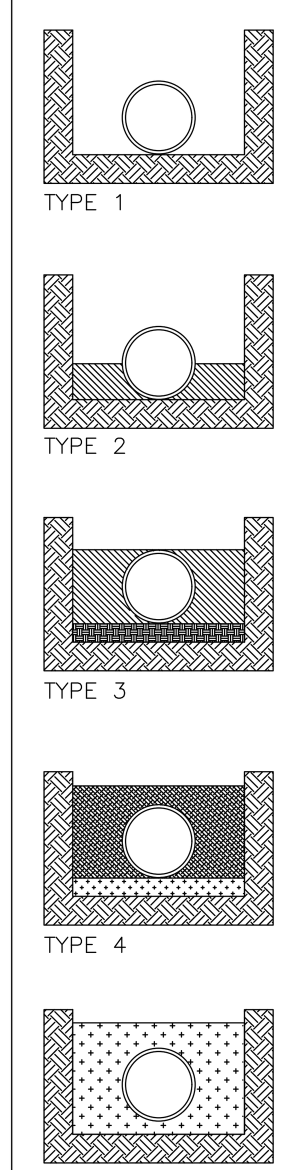

LAYING CONDITIONS	DESCRIPTION	PROJECT USE
TYPE 1	FLAT BOTTOM UNDISTURBED EARTH TRENCH, LOOSE BACKFILL	NOT USED.
TYPE 2	FLAT BOTTOMED UNDISTURBED EARTH TRENCH. BACKFILL LIGHTLY CONSOLIDATED TO CENTERLINE OF PIPE.	NOT USED.
TYPE 3	PIPE BEDDED IN 4" MININUM JOB EXCAVATED MATERIAL. BACKFILL LIGHTLY CONSOLIDATED TO TOP OF PIPE.	ALL DUCTILE IRON GRAVITY SEWER LINE.
TYPE 4	PIPE BEDDED IN SAND, GRANULAR MATERIAL OR GRADED GRAVEL TO THE DEPTH OF 1/8 PIPE DIAMETER, 4" MIN. JOB EXCAVATED MATERIAL COMPACTED TO 4" ABOVE TOP OF PIPE. (APPROX. 95% STANDARD PROCTOR, AASHTO T-99)	ALL PVC WATER LINE AND PVC FORCE MAIN.
TYPE 5	PIPE BEDDED TO ITS CENTERLINE IN COMPACTED GRANULAR MATERIAL 4" MIN. UNDER PIPE. COMPACTED GRANULAR OR SAND MATERIAL TO 4"ABOVE TOP OF PIPE. (APPROX. 95% STANDARD PROCTOR, AASHTO T-99)	ALL PVC GRAVITY SEWER LINE.

TYPICAL LAYING CONDITIONS DETAIL (W/11)
NO SCALE

NOTES:
1. INSTALL METER AT R/W
2. "TWO (2)-3/4" SERVICE LINES MUST BE INSTALLED INSIDE A 2" SLEEVE."
3. "TWO (2)-1" SERVICE LINES MUST BE INSTALLED INSIDE A 3" SLEEVE."
4. SLEEVES SHOULD BE SCHEDULE 40 PVC PIPE.
5. SEE DETAIL FOR SERVICE MATERIAL AND METER SETTING
6. SERVICE LINE SHALL BE 3' BELOW FINISHED GRADE OF DITCHES.
7. CONDUIT MUST EXTEND PAST PROPOSED SIDEWALK

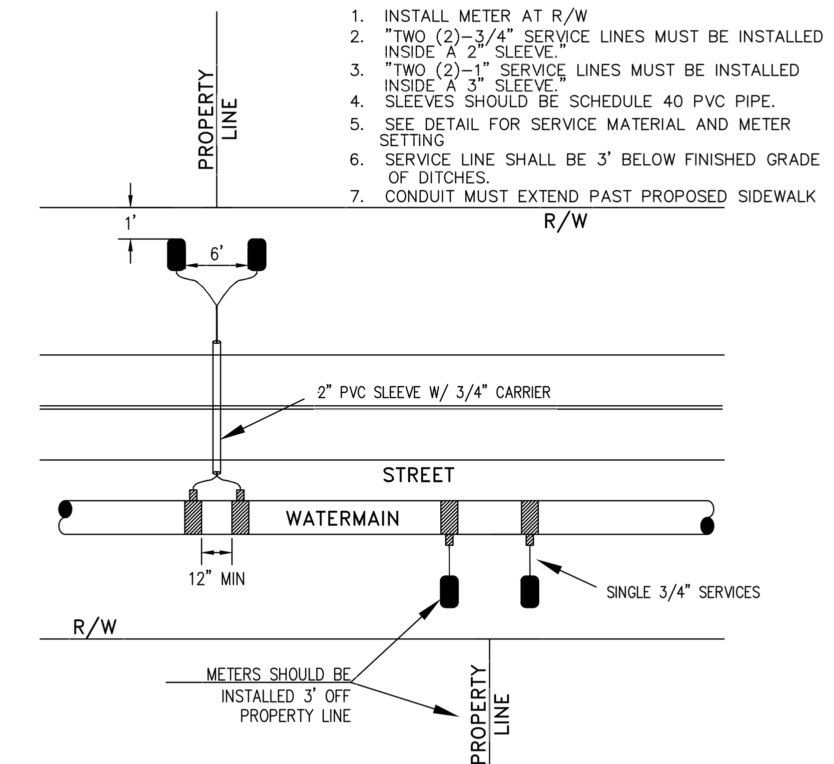

TYPICAL DOMESTIC WATER SERVICE INSTALLATION DETAIL (W/12)
NO SCALE

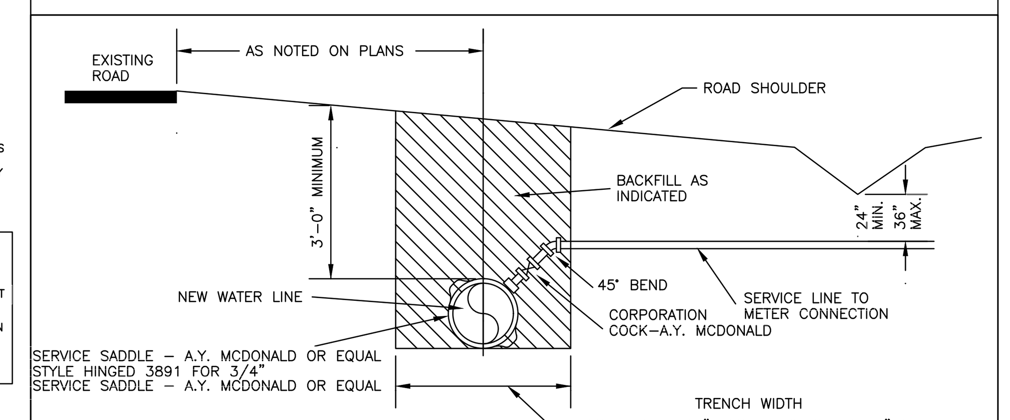

NOTE:
1. "SERVICE CONNECTION" IN PROPOSAL TO INCLUDE SERVICE SADDLE, 45° BEND, CORPORATION COCK AND ALL LABOR INVOLVED IN MAKING A COMPLETE SERVICE CONNECTION.
2. SERVICE PIPING TO BE 3/4"
3. ALL BRASS FITTINGS SHALL BE COMPRESSION TYPE

TYPICAL WATER SERVICE CONNECTION USING TAPPING SADDLE DETAIL (W/13)
NO SCALE

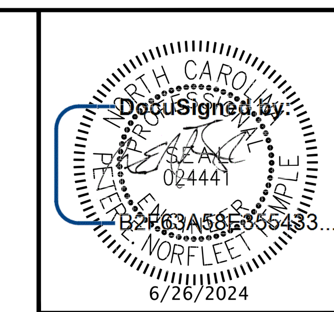

ALL UNDERGROUND CONSTRUCTION MUST CONFORM TO THE UTILITY PROTECTION ACT
BEFORE YOU DIG! CONTACT ONE-CALL CENTER 1-800-632-4949

LOCATION:
SR 1709 - HODGES CHAPEL RD.
AVERASBORO TOWNSHIP
HARNETT COUNTY

PROPERTY OWNER/DEVELOPER:
JPF PROPERTIES LLC
PO BOX 1207
DUNN, NC 28335-1207

REVISIONS

FLEET TEMPLE ENGINEERING PLLC
5245 Red Hill Church Road • Coats, NC 27521
910.658.2446 • fleet@fleettempleengineering.com • P-2357

DETAILS
FOR
PJ'S TRUCK BODIES

DATE: 06.26.2024
FTE JOB# 0069

C2.1

HORIZONTAL SCALE: N/A
VERTICAL SCALE: N/A

NOTE: This document, in physical or electronic form, discloses subject matter considered confidential to FLEET TEMPLE ENGINEERING, PLLC and on which FLEET TEMPLE ENGINEERING, PLLC has exclusive property rights. Neither receipt nor possession thereof confers or transfers any rights to reproduce this document or any part thereof, or to disclose any information contained therein to others, or to use it for any purpose without the written permission of FLEET TEMPLE ENGINEERING, PLLC.

, 1 0486-6:25 2/, " . " &, ., ", -

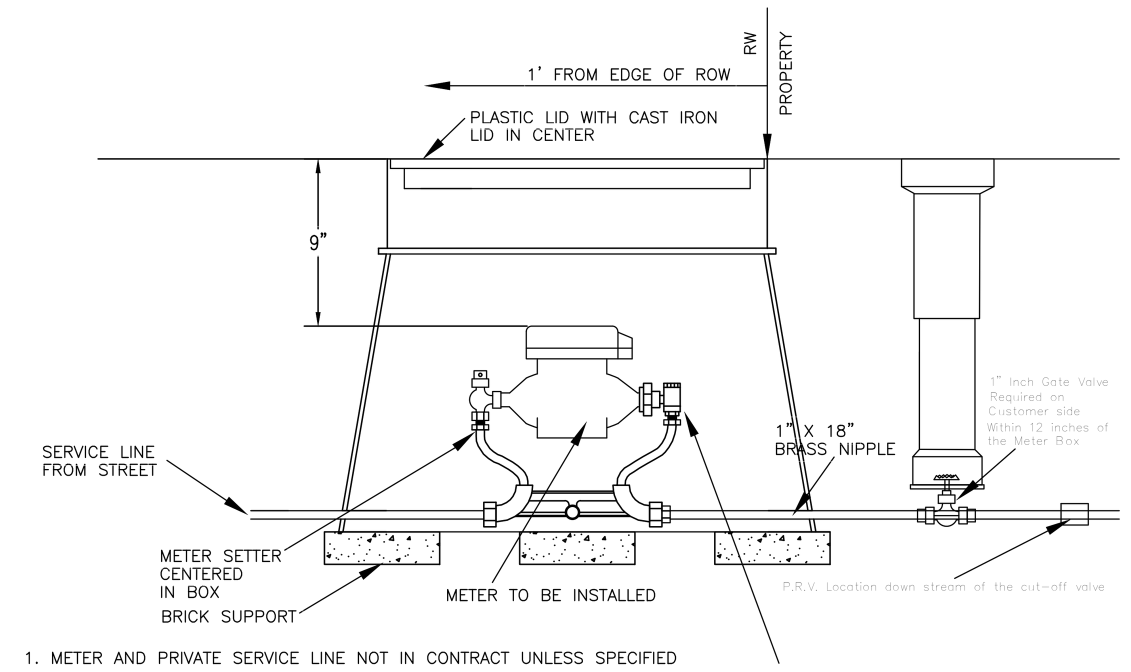

1. METER AND PRIVATE SERVICE LINE NOT IN CONTRACT UNLESS SPECIFIED
2. METER SETTER SIZE AS NOTED ON PLANS.
3. ALL BRASS FITTINGS SHALL BE COMPRESSION TYPE.

TYPICAL 1" METER SETTER INSTALLATION DETAIL (W / 16)
NO SCALE

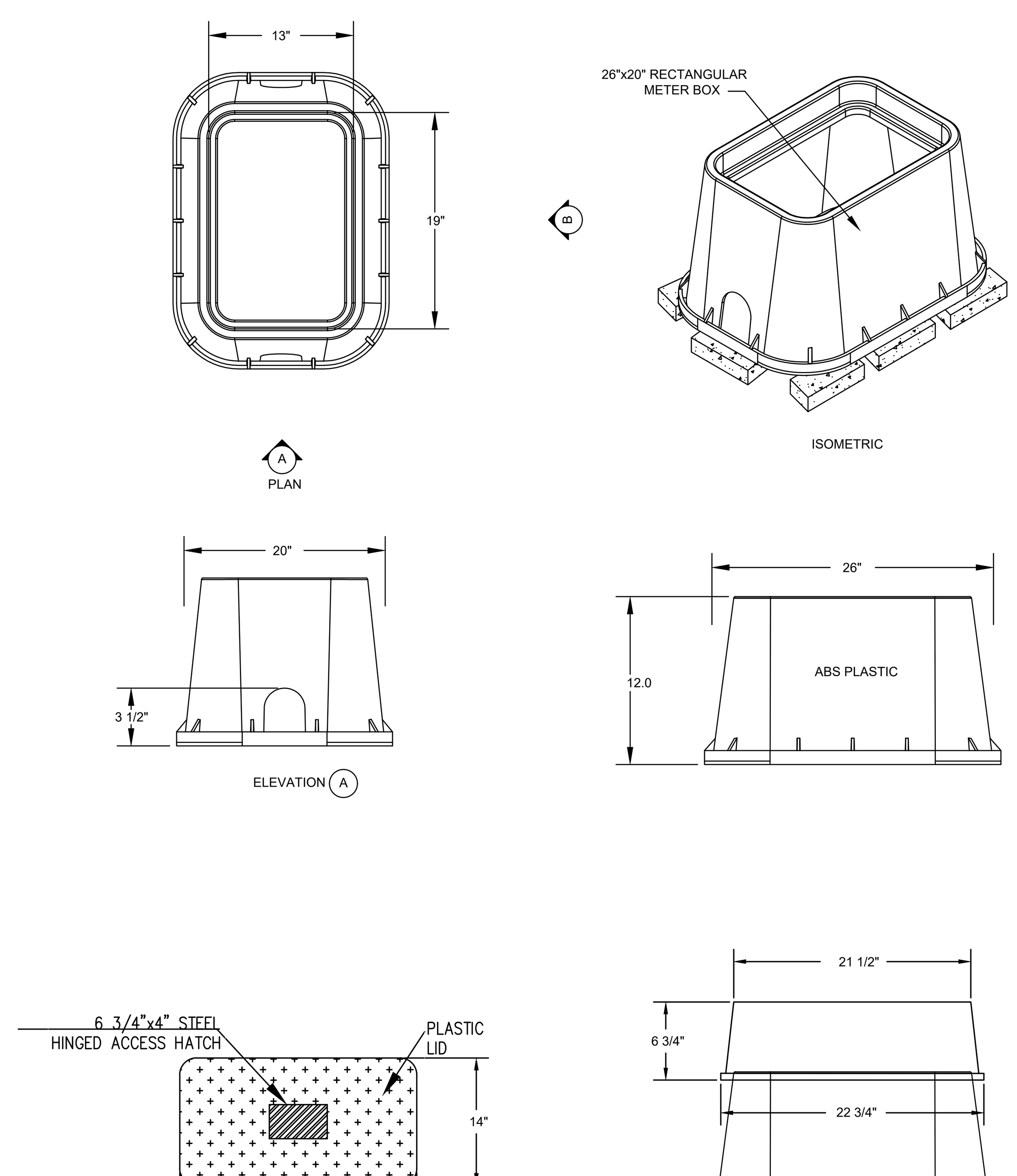

TYPICAL METER BOX DETAIL FOR 1" SERVICE (W / 17)
NO SCALE

2022 HRW REQUIRED UTILITY NOTES (Revision 10– April 19, 2022)

WATER

A. The Fire Marshal's Office shall approve all hydrant types and locations in new subdivisions. However, Harnett Regional Water (HRW) prefers the contractors to install one of the following fire hydrants:
1. Mueller – Super Centurion 250 A–423 model with a 5¼" main valve opening three way (two hose nozzles and one pumper nozzle);
2. American Darling – Mark B–84–B model with a 5¼" main valve opening three way (two hose nozzles and one pumper nozzle);
3. Waterous – Pacer B–67–250 model with a 5¼" main valve opening three way (two hose nozzles and one pumper nozzle) or approved equal for standardization. *All fire hydrants listed above must have "American National Fire Hose Connection Screw Threads" NST/NH hose threads.

B. Fire hydrants are installed at certain elevations. Any grade change near any fire hydrant, which impedes its operation, shall become the responsibility of the Utility Contractor for correction. Corrections will be monitored by the HRW Utility Construction Inspector and the Harnett County Fire Marshal.

C. The Professional Engineer (PE) shall obtain and provide the NCDEQ "Authorization to Construct" permit to the Utility Contractor before the construction of the water line shall begin. The Utility Contractor must post a copy of the NCDEQ "Authorization to Construct" permit issued by the North Carolina Department of Environmental Quality (NCDEQ) on site prior to the start of construction. The permit must be maintained on site throughout the entire construction process of the proposed water lines that will serve this project.

D. The Utility Contractor shall notify Harnett Regional Water (HRW) and the Professional Engineer (PE) at least two days prior to construction commencing. The Utility Contractor must schedule a pre–construction conference with Mr. Chad Everette, HRW Utility Construction Inspector at least two (2) days before construction will begin and the Utility Contractor must coordinate with HRW for regular inspection visitations and acceptance of the water system(s). Construction work shall be performed only during the normal working hours of HRW which is 8:00 am – 5:00 pm Monday through Friday. Holiday and weekend work is not permitted by HRW.

E. The Professional Engineer (PE) shall provide HRW and the Utility Contractor with a set of NCDEQ approved plans marked "Released for Construction" at least two days prior to construction commencing. The Registered Land Surveyor (RLS) should stake out all lot corners and the grade stakes for the proposed finish grade for each street before the Utility Contractor begins construction of the water line(s). The grade stakes should be set with a consistent offset from the street centerline so as not to interfere with the street grading and utility construction.

F. The Utility Contractor shall provide the HRW Utility Construction Inspector with material submittals and shop drawings for all project materials prior to the construction of any water line extension(s), and associated water services in Harnett County. The materials to be used on the project must meet the established specifications of HRW and be approved by the Engineer of Record prior to construction. All substandard materials or materials not approved for use in Harnett County found on the project site must be removed immediately when notified by the HRW Utility Construction Inspector.

G. The water main(s), fire hydrants, service lines, meter setters and all associated appurtenances shall be constructed in strict in accordance with the standard specifications of the Harnett Regional Water (HRW). The Utility Contractor shall be responsible to locate the newly installed water main(s), water service lines and all associated meter setters and meter boxes for other utility companies and their contractors until the new water main(s) have been approved by the North Carolina Department of Environmental Quality, Division of Environmental Health, Public Water Supply Section (NCDEQ, DEH, PWS) and accepted by HRW.

H. Prior to acceptance, all services will be inspected to ensure that they are installed at the proper depth. All meter boxes must be flush with the ground level at finish grade and the meter setters must be a minimum of 8" below the meter box lid. Meter setters shall be centered in the meter box and supported by brick, block or stone.

I. The Utility Contractor shall provide the Professional Engineer (PE) and HRW Utility Construction Inspector with a set of red line drawings identifying the complete water system installed for each project. The red line drawings should identify the materials, pipe sizes and approximate depths of the water lines as well as the gate valves, fire hydrants, meter setters, blow off assemblies and all associated appurtenances for all water line(s) constructed in Harnett County. The red line drawings should clearly identify any deviations from the NCDEQ approved plans. All change orders must be approved by HRW and the Professional Engineer (PE) in writing and properly documented in the red line field drawings.

J. Potable water mains crossing other utilities and non–potable water lines (sanitary sewer, storm sewer, RCP, etc.) shall be laid to provide a minimum vertical distan potable ce of twentyfour (24") inches between the potable water main and all other utilities. NCDOT requires the new water mains to be installed under the storm water lines. The potable water main shall be installed with twentyfour (24") inches of vertical sep aration and with ductile iron pipe when designed to be placed under a nonpotable water line such as sanitary sewer or storm sewer lines. If these separations cannot be maintained then the water main shall be installed with ductile iron pipe. Both the po table water main and the nonpotable water line must be cast iron or ductile iron pipe (DIP) if the state minimum separations cannot be maintained. The ductile iron pipe must be laid so the mechanical joints are at least (10') feet from the point where the water main crosses the nonpotable water line.

K. Potable water mains installed parallel to none potable potable water lines (sanitary sewer, storm sewer, RCP, etc.) shall be laid to provide a minimum horizontal distance of ten (10') feet between the potable water main and sanitary sewer mains, sewer laterals and services. The horizontal separation between the potable water main and any other utility or storm sewer shall not be less than five (5') feet. The potable water main must be ductile iron pipe i f this horizontal separation of ten (10') feet cannot be maintained. The ductile iron pipe shall extend at least ten (10') feet beyond the point where the minimum required horizontal separation of ten (10') feet can be re

L. Meter setters shaestablished. ll be installed in pairs on every other lot line where possible to leave adequate space for other utilities to be installed at a later time. The meter setters shall be installed at least one (1') foot inside the right fivofway and at least three (3') to e (5') feet from the property line between the lots.

M. HRW requires that meter boxes for ¾" services shall be 12" wide x 17" long ABS plastic boxes at least 18" in height with cast iron lids/covers. Meter boxes for 1" services shall be 17" wide x 21" l ong ABS plastic boxes at least 18" in height with plastic lids and cast iron flip covers in the center of the lids. Meter boxes for 2" services shall be 20" wide x 32" long ABS plastic boxes at least 20" in height with plastic lids and cast iron flip cove rs in the center of the lids.

N. Master meters must be installed in concrete vaults sized for the meter assembly and associated appurtenances so as to provide at least eighteen (18") inches of clearance between the bottom of the concrete vault and the bottom of the meter setter. The master meter must be provided test ports if the meter is not equipped with test ports from the manufacturer in accordance with the HRW established standard specifications and details. Ductile iron pipe must be used for the master meter vault piping and valve vault piping. The Utility Contractor must provide shop drawings for the meter vaults to HRW prior to ordering the concrete vaults.

O. The Utility Contractor will install polyethylene SDR–9 water service lines that cross under the pavement inside a schedule 40 PVC conduit to allow for removal and replacement in the future. Two (2) independent ¾" water service lines may be installed inside one (1) – two (2") inch schedule 40 PVC conduit or two (2) independent 1" water service lines may be installed inside one (1) – three (3") inch schedule 40 PVC conduit, but each water service shall be tapped directly to the water main. Split services are not allowed by HRW. If sidewalks are proposed, the conduit must extend past the sidewalk.

P. The water main(s), fire hydrants, gate valves, service lines, meter setters and associated appurtenances must be rated for 200 psi and hydrostatically pressure tested to 200 psi. The hydrostatic pressure test(s) must be witnessed by the HRW Utility Construction Inspector. The Utility Contractor must notify HRW when they are ready to begin filling in lines and coordinate with Harnett Regional Water to witness all pressure testing.

Q. The Utility Contractor shall conduct a pneumatic pressure test using compressed air or other inert gas on the stainless steel tapping sleeve(s) prior to making the tap on the existing water main. This pneumatic pressure test must be witnessed by the HRW Utility Construction Inspector. The Utility Contractor shall use Romac brand stainless steel tapping sleeve(s) or approved equal for all taps made in Harnett County. All new water line extensions must begin with a resilient wedge type gate valve sized equal to the diameter of the new water line extension in order to provide a means of isolation between Harnett Regional Water's existing water mains and the new water line extensions under construction.

R. All water mains will be constructed with SDR–21 PVC Pipe or Class 50 Ductile Iron Pipe rated for at least 200 psi or greater. All pipes must be protected during loading, transport, unloading, staging, and installation. PVC pipe must be protected from extended exposure to sunlight prior to installation.

S. All water mains will be flushed and disinfected in strict accordance with the standard specifications of the Harnett Regional Water. All water samples collected for bacteria testing HRW Utility Construct ion Inspector and will be collected by the tested in the HRW Laboratory.

T. All fittings larger than two (2") inches diameter shall be ductile iron. HRW requires that mechanical joints be assembled with grip rings as "Megalug" fittings are not approved by Harnett Regional Water for pipe sizes smaller than twelve inches (12") diameter. PVC pipe used for water mains shall be connected by slip joint or mechanical joint with grip rings. Glued pipe joints are not allowed on PVC pipe used for water mains in Harnett County.

U. HRW requires that the Utility Contractor install tracer wire in the trench with all water lines. The tracer wire shall be 12 ga. insulated, solid copper conductor and it shall be terminated at the top of the valve boxes or manholes. No spliced wire connection s shall be made underground on tracer wire installed in Harnett County. The tracer wire may be secured with duct tape to the top of the pipe before backfilling.

V. The Utility Contractor will provide Professional Engineer (PE) and the Utility Construction Inspector with a set of red line field drawings to identify the installed locations of the water line(s) and all associated services. All change orders must be pre approved by HRW and the Professional Engineer (PE) in writing and properly documente d in the red line field drawings.

W. The Utility Contractor shall spot dig to expose each utility pipe or line which may conflict with construction of proposed water line extensions well in advance to verify locations of the existing utilities. The Utility Contractor shall provide both horizontal and vertical clearances to the Professional Engineer (PE) to allow the PE to adjust the water line design in order to avoid conflicts with existing underground utilities. The Utility Contractor shall coordi nate with the utility owner and be responsible for temporary relocation and/or securing existing utility poles, pipes, wires, cables, signs and/or utilities including services in accordance with the utility owner requirements during water line installation , grading and street construction.

X. Prior to the commencement of any work within established utility easements or NCDOT rightofways the Utility Contractor is required to have a signed NCDOT encroachment agreement posted on site and notify all concerned utility companies in accordance with G.S. 87102. The Utility Contractor must call the NC One Call Center at 811 or (800) 6324949 to verify the location of existing utilities prior to the beginning of construction. Existing utilities shown in these pla ns are taken from maps furnished by various utility companies and have not been physically located or verified by the P.E. (i.e. TELEPHONE, CABLE, WATER, SEWER, ELECTRICAL POWER, FIBER OPTIC, NATURAL GAS, ETC.). The Utility Contractor will be responsible to repair any and all damages to the satisfaction of the related utility company.

Y. The Utility Contractor shall provide HRW with at least one (1) fire hydrant wrench and one (1) break–away flange kit for every subdivision with fire hydrants developed in Harnett County. These items must be provided to HRW before the final inspection will be scheduled by the HRW Utility Construction Inspector. In addition, the Utility Contractor shall install a 4" x 4" concrete valve marker at the edge of the right–of–way to identify the location of each gate valve installed in the new water system with the exception of the fire hydrant isolation valves. The contractor shall measure the distance from the center of the concrete marker to the center of the valve box. This distance (in linear feet) shall be stamped on the brass plate located on the top of the concrete valve marker. In lieu of installing the concrete valve markers, the Utility Contractor may provide at least two measurements from two independent permanent above ground structures to the Professional Engineer (PE) in the red line drawings to identify the valve locations. The Professional Engineer (PE) must include these measurements in the As–Built Record Drawings submitted to HRW.

Z. The Utility Contractor will be responsible for any and all repairs due to leakage damage from poor workmanship during the one (1) year warranty period once the water system improvements have been accepted by Harnett Regional Water. Harnett Regional Water will provide maintenance and repairs when requested and bill the Developer and/or Utility Contractor if necessary due to lack of response within 48 hours of notification of warranty work. The Utility Contractor will be responsible for any and all repairs due to damages resulting from failure to locate the new water lines and associated appurtenances for other utilities and their contractors until the water lines have been approved by NCDEQ and accepted by HRW. The final inspection of water system improvements cannot be scheduled with HRW until the streets have been paved; the rights–of–way and utility easements have been seeded and stabilized with an adequate stand of grass in place to prevent erosion issues on site.

AA The Engineer of Record is responsible to ensure that construction is, at all times, in compliance with accepted sanitary engineering practices and approved plans and specifications. No field changes to the approved plans are allowed without prior written approval by HRW. A copy of each engineer's field report is to be submitted to HRW as each such inspection is made on system improvements or testing is performed by the contractor. Water and sewer infrastructure must pass all tests required by HRW specifications and those of all applicable regulatory agencies. These tests include, but are not limited to: air test, vacuum test, mandrel test, visual test, pressure test, bacteriological test, etc. A HRW Inspector must be present during testing and all test results shall be submitted to HRW. All tests must be satisfied before the final inspection will be scheduled with the HRW Inspector. The Engineer of Record must request in writing to schedule the final inspection once all construction is complete. The Developer's Engineer of Record and the HRW Utility Construction Inspector shall prepare a written punch list of any defects or deficiencies noted during the final inspection, should any exist. Upon completion of the punch list, the Developer's Engineer of Record will schedule another inspection. In the event the number of inspections performed by the HRW exceeds two, additional fees may be assessed to the Developer.

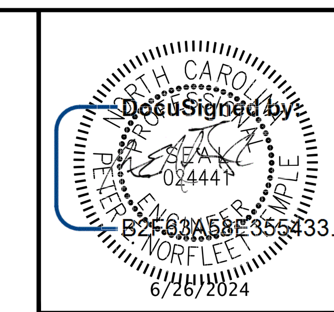

ALL CONSTRUCTION MUST CONFORM TO THE UNDERGROUND UTILITY PROTECTION ACT
BEFORE YOU DIG! CONTACT ONE–CALL CENTER 1–800–632–4949

REVISIONS

LOCATION:
SR 1709 - HODGES CHAPEL RD.
AVERASBORO TOWNSHIP
HARNETT COUNTY

PROPERTY OWNER/DEVELOPER:
JPF PROPERTIES LLC
PO BOX 1207
DUNN, NC 28335-1207

FLEET TEMPLE ENGINEERING PLLC
5245 Red Hill Church Road • Coats, NC 27521
910.658.2446 • fleet@ftempleengineering.com • P-2357

DETAILS
FOR
PJ'S TRUCK BODIES

HORIZONTAL SCALE: N/A
VERTICAL SCALE: N/A

DATE: 06.26.2024
FTE JOB# 0069

C2.2

NOTE: This document, in physical or electronic form, discloses subject matter considered confidential to FLEET TEMPLE ENGINEERING, PLLC and on which FLEET TEMPLE ENGINEERING, PLLC has exclusive property rights. Neither receipt nor possession thereof confers or transfers any rights to reproduce this document or any part thereof, or to disclose any information contained therein to others, or to use it for any purpose without the written permission of FLEET TEMPLE ENGINEERING, PLLC

GENERAL

1. THESE DRAWINGS ARE TO BE COORDINATED WITH THE ARCHITECTURAL, MECHANICAL, PLUMBING, ELECTRICAL, AND CIVIL DRAWINGS.
2. THIS STRUCTURE AND ALL CONSTRUCTION SHALL CONFORM TO ALL APPLICABLE SECTIONS OF THE NC BUILDING CODE AND ANY LOCAL LAWS WHERE THE STRUCTURE IS TO BE CONSTRUCTED.
3. THESE STRUCTURAL NOTES ARE AN INTEGRAL PART OF THE STRUCTURAL DRAWINGS AND ARE TO BE USED IN CONJUNCTION WITH THE JOB SPECIFICATIONS. WHEN THERE ARE NO SPECIFICATIONS IN ADDITION TO THESE NOTES SHALL GOVERN. WHEN THERE IS A SPECIFICATION IN ADDITION TO THE NOTES THE MORE STRINGENT OF THE TWO SHALL GOVERN.

MISCELLANEOUS

1. THE CONTRACTOR SHALL PROVIDE ADEQUATE TEMPORARY BRACING, SHORING, AND GUYING OF FRAMING AND WALLS AGAINST WIND, CONSTRUCTION LOADS, AND OTHER TEMPORARY FORCES UNTIL SUCH PROTECTION IS NO LONGER REQUIRED FOR THE SAFE SUPPORT OF THE FRAMING.
2. THE CONTRACTOR SHALL BE RESPONSIBLE FOR REVIEWING THE DIMENSIONS OF THE STRUCTURAL DRAWINGS AND ADVISING THE ENGINEER OF ANY DIFFERENCES IN DIMENSIONS BETWEEN THE PRE-ENGINEERED METAL BUILDING PLANS AND SECTIONS PRIOR TO COMMENCING CONSTRUCTION.
3. CONSTRUCTION SAFETY: THESE STRUCTURAL DRAWINGS DO NOT CONTAIN NECESSARY COMPONENTS FOR SAFETY DURING CONSTRUCTION.

FOUNDATIONS

1. THE STRUCTURAL ENGINEER HAS NOT PERFORMED A SUBSURFACE INVESTIGATION. THE FOUNDATION IS BASED UPON AN ASSUMED SOIL BEARING CAPACITY OF 2000 PSF NET BEARING. VERIFICATION OF THIS ASSUMED VALUE IS THE RESPONSIBILITY OF THE OWNER OR CONTRACTOR. SHOULD ANY ADVERSE SOIL CONDITION BE ENCOUNTERED, THE STRUCTURAL ENGINEER MUST BE CONTACTED BEFORE PROCEEDING.
2. ANY FILL SHALL BE PLACED UNDER THE DIRECTION OR RECOMMENDATION OF A LICENSED PROFESSIONAL ENGINEER. THE RESULTING SOIL SHALL BE COMPACTED TO A MINIMUM OF 95 PERCENT MAXIMUM DRY DENSITY.
3. SITE PREPARATION: REMOVE TOPSOIL, ORGANICS, SOFT CLAY, AND ANY OTHER UNSOUND MATERIAL FROM UNDER ALL FLOOR SLABS, FOOTINGS, AND 5'-0" BEYOND BUILDING WALL. PROOFROLL THE EXPOSED SUBGRADE WITH A FULLY LOADED, TANDEM AXLE DUMP TRUCK OR SIMILAR RUBBER TIRED CONSTRUCTION EQUIPMENT AS RECOMMENDED BY THE GEOTECHNICAL ENGINEER IN ORDER TO DENSIFY THE EXPOSED SUBGRADE AND TO LOCATE SOFT UNSUITABLE SOILS. REMOVE AND REPLACE ANY UNSUITABLE SOILS AS DIRECTED BY THE GEOTECHNICAL ENGINEER. BACKFILL AS REQUIRED WITH CLEAN SELECTED FILL COMPACTED IN 8" TO 10" LOOSE THICKNESS LIFTS AND COMPACT TO 95% OF MAXIMUM DENSITY AT OPTIMUM MOISTURE CONTENT. UPPER 18" OF FILL UNDER FLOOR SLABS TO BE COMPACTED IN 6" MAXIMUM LAYERS TO 98% DENSITY AT OPTIMUM MOISTURE CONTENT (ASTM D-698).
4. WHEN BOTTOM OF FOUNDATIONS ARE AT OR BELOW THE GROUND WATER TABLE, PROPERLY DEWATER THE FOUNDATION EXCAVATION PRIOR TO PLACING CONCRETE.
5. AN IMAGINARY 45 DEGREE LINE EXTENDING DOWNWARD AND OUTWARD FROM THE BOTTOM CORNER OF ANY EXISTING FOUNDATION SHALL NOT INTERSECT ANT INTENDED EXCAVATION FOR ADJACENT FOUNDATIONS OR UTILITIES, UNLESS NOTED OTHERWISE ON THE DRAWINGS.

CONCRETE

1. REINFORCED CONCRETE WORK SHALL COMPLY WITH BOTH "SPECIFICATIONS FOR STRUCTURAL BUILDINGS" ACI 301 AND "BUILDING CODE REQUIREMENTS FOR REINFORCED CONCRETE" ACI 318
2. CONCRETE SHALL BE PLACED IN ACCORDANCE WITH ACI 304R.
3. DURING HOT WEATHER THE CONTROL OF CONCRETE PLACEMENT, PROTECTION AND CURING SHALL COMPLY WITH ACI 305R.
4. WHEN THE MEAN DAILY TEMPERATURE IS BELOW 40 DEGREES F THE CONTROL OF PLACEMENT, PROTECTION AND CURING SHALL COMPLY WITH ACI 306R.
5. CONCRETE SHALL HAVE NORMAL WEIGHT AGGREGATE AND A MINIMUM COMPRESSIVE STRENGTH (Fc) AT 28 DAYS AS LISTED BELOW.
   - 5.1 FOOTINGS 3000 PSI
   - 5.2 SLABS-ON-GRADE 3000 PSI
6. ENTRAINED AIR MUST BE USED IN ALL CONCRETE THAT WILL BE EXPOSED TO FREEZING AND THAWING AND DEICING CHEMICALS. AMOUNT OF AIR ENTRAINMENT (PERCENT) SHALL BE IN ACCORDANCE WITH THE FOLLOWING SCHEDULE WITH A RANGE OF -1 TO +2 PERCENTAGE POINTS OF THE TARGET VALUE:
   - 6.1 FOOTINGS 5%
   - 6.2 INTERIOR SLABS 0%, SEE NOTE BELOW
   - 6.3 EXTERIOR SLABS 5%

   NOTE: IT IS RECOMMENDED THAT INTERIOR SLABS TO BE GIVEN A SMOOTH, DENSE, HARD-TROWELED FINISH NOT TO CONTAIN ENTRAINED AIR SINCE BLISTERING OR DELAMINATION MAY OCCUR. IF SLAB WILL BE EXPOSED TO DEICING OR OTHER AGGRESSIVE CHEMICALS, CONTACT STRUCTURAL ENGINEER FOR PROPER AIR ENTRAINMENT REQUIREMENTS.
7. CONCRETE SLABS ON GRADE SHALL BE CONSTRUCTED IN ACCORDANCE WITH ACI 302.1R-96 "GUIDE FOR CONCRETE SLAB AND SLAB CONSTRUCTION"
8. CONTROL JOINTS SHALL BE SPACED IN SLABS ON GRADE AT A MAXIMUM OF 20'-0" O.C. UNLESS OTHERWISE NOTED.

REINFORCING STEEL

5. REINFORCING STEEL SHALL COMPLY WITH ASTM A615, GRADE 60. WELDED WIRE FABRIC SHALL COMPLY WITH ASTM A185. WELDABLE REINFORCING BARS SHALL COMPLY WITH ASTM A706, GRADE 60.
6. CLEAR CONCRETE COVER ON REINFORCING STEEL: BOTTOM OF FOOTINGS= 3", SIDE AND TOP SURFACE OF FOOTINGS= 2", BOTTOM OF SLAB ON GRADE = 2 1/2", WALL SURFACE = 2", TOP OR BOTTOM SURFACE OF FLOOR SLABS = 3/4"
7. PROVIDE CLASS 3 BAR AND MESH SUPPORTS.
8. DETAILING, FABRICATION AND PLACEMENT OF REINFORCING STEEL SHALL BE IN ACCORDANCE WITH ACI 315 (LATEST EDITION) MANUAL OF STANDARD PRACTICE FOR DETAILING CONCRETE STRUCTURES.
9. HORIZONTAL FOOTING AND WALL REINFORCEMENT SHALL BE CONTINUOUS AND AND SHALL HAVE 90° BENDS OR CORNER BARS SHALL BE INSTALLED. THE CORNER BAR SHALL HAVE THE SAME SIZE AND SPACING AS THE HORIZONTAL REINFORCEMENT WITH A CLASS B TENSION SPLICE.
10. LAP REINFORCEMENT AS REQUIRED A MINIMUM OF 40 BAR DIAMETERS FOR TENSION OR COMPRESSION UNLESS NOTED OTHERWISE. SPLICES IN MASONRY SHALL BE A MINIMUM OF 48 BAR DIAMETERS.
11. WHERE REINFORCING DOWELS ARE REQUIRED THEY SHALL BE EQUIVALENT SIZE AND SPACING AS THE VERTICAL REINFORCEMENT. THE DOWEL SHALL EXTEND 48 BAR DIAMETERS VERTICALLY AND 20 BAR DIAMETERS INTO FOOTING.

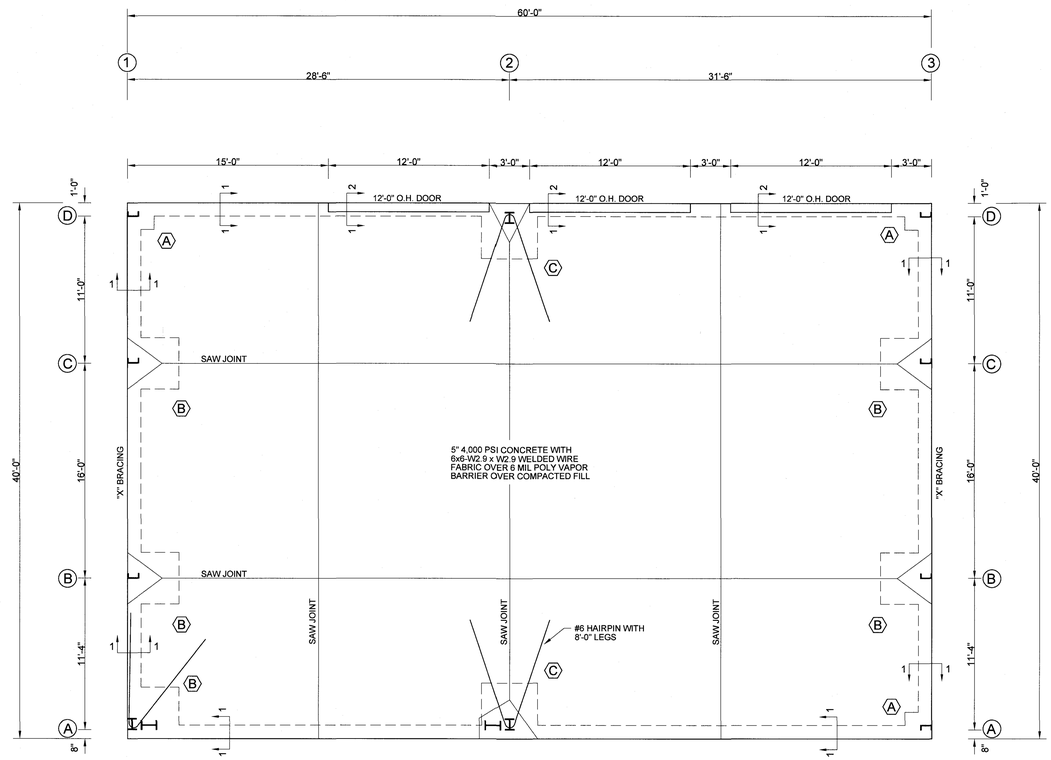

1 / F-1 **FOUNDATION PLAN**

SCALE: 3/16"=1'-0"

ANCHOR BOLTS REQUIRED

SIZE	TYPE	NUMBER	LENGTH	LT	NUTS	WASHERS
3/4"	ROD	48	18"	4"	48	48

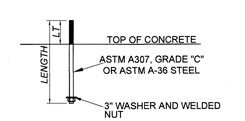

NOTE: DO NOT "RAM" ANCHOR BOLTS INTO FRESHLY POURED CONCRETE SLAB. ALL ANCHOR BOLTS, WITH NUTS ATTACHED, ARE TO BE PLACED IN PRE DRILLED TEMPLATES AND PROPERLY SUPPORTED, PRIOR TO CONCRETE POUR. BE SURE TO VIBRATE CONCRETE AROUND ANCHOR BOLTS.

COPYRIGHT 2023 © SMITH ENGINEERING AND DESIGN, P.A. - ALL RIGHTS RESERVED

SMITH ENGINEERING AND DESIGN, P.A.
1103 Gracie Place, Suite A
Goldsboro, N.C. 27534
Corporation License No. C-2241
Phone: 919.736.2141 Fax: 919.736.2142

NORTH CAROLINA PROFESSIONAL SEAL 024916 5-19-23 ENGINEER JOE T. SMITH JR.

REVISIONS

REV	DATE	DESCRIPTION

PJ's Truck Bodies & Equipment Co.

1560 George Perry Lee Road
Dunn, NC 28334

DATE:	19 May 2023
DRAWN BY:	J.S.
SCALE:	3/16" = 1'-0"

F-1

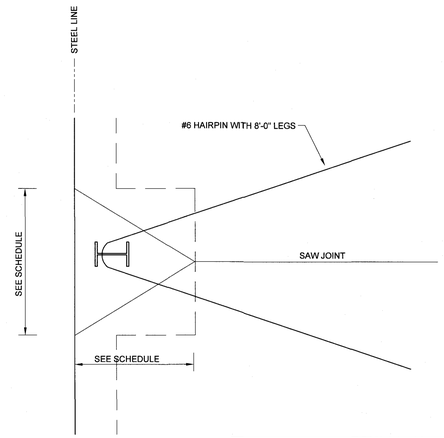

PLAN

MARK	FOOTING SIZE	REBAR
A	2'-0" X 2-0" X 2'-0"	(3) #4 E.W.
B	3'-10" X 3'-10" X 2'-0"	(5) #4 E.W.
C	4'-2" X 4'-2" X 2'-0"	(6) #4 E.W.

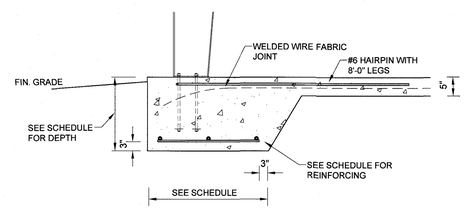

FOOTING DETAIL

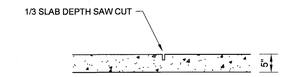

SAW JOINT

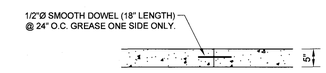

DOWEL CONSTRUCTION JOINT

NOTE: DOWELED CONSTRUCTION JOINTS MAY BE SUBSTITUTED FOR SAW JOINTS.

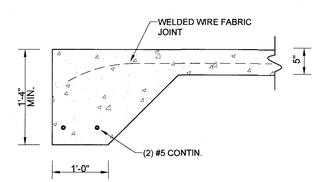

SECTION 1-1

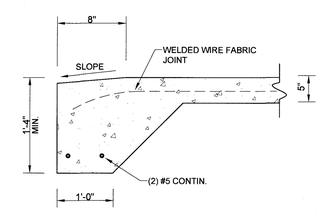

SECTION 1-2
AT O.H. DOORS

COPYRIGHT 2019 © SMITH ENGINEERING AND DESIGN, P.A. – ALL RIGHTS RESERVED

SMITH ENGINEERING AND DESIGN, P.A.
1103 Gracie Place, Suite A
Goldsboro, N.C. 27534
Corporation License No. C-2241
Phone: 919.736.2141 Fax: 919.736.2142

NORTH CAROLINA PROFESSIONAL ENGINEER SEAL 024916 5-19-23 JOE T. SMITH JR.

REVISIONS

REV	DATE	DESCRIPTION

PJ's Truck Bodies & Equipment Co.
1560 George Perry Lee Road
Dunn, NC 28334

DATE:	19 May 2023
DRAWN BY:	J.S.
SCALE:	N.T.S.

F-2

JPF PROPERTIES
HODGES CHAPEL RD. BUILDING

ADDRESS PENDING
Dunn, NC 28334

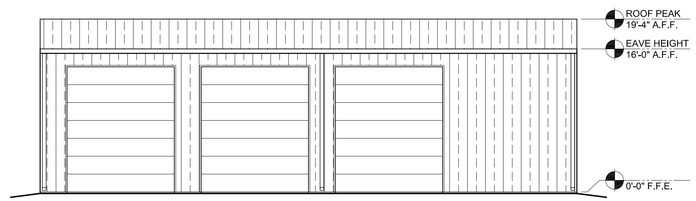

2 SOUTH ELEVATION
Scale : 1/8" = 1'-0"

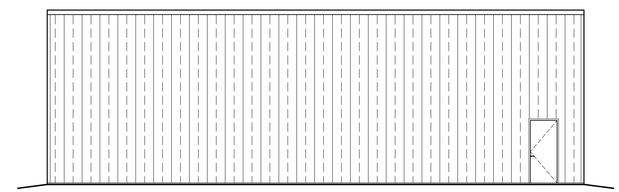

3 NORTH ELEVATION
Scale : 1/8" = 1'-0"

NOTES:
1. Field verify all dimensions and conditions.
2. All work is to be done in accordance with the current version of the NC Building Code.
3. For F-1 Occupancy and Type II-B construction with a fire separation distance of greater than 10' the exterior walls require 0 fire-resistance ratings. (NCBC Table 602)

LEGEND

FIRE EXTINGUISHER	FE

DOOR SCHEDULE

SYM.	SIZE	QTY.	NOTES
1	3'-0"x7'-0"	2	EXTERIOR DOOR
2	12'-0"x14'-0"	3	OVERHEAD GARAGE DOOR
3	3'-0"x7'-0"	3	INTERIOR DOOR

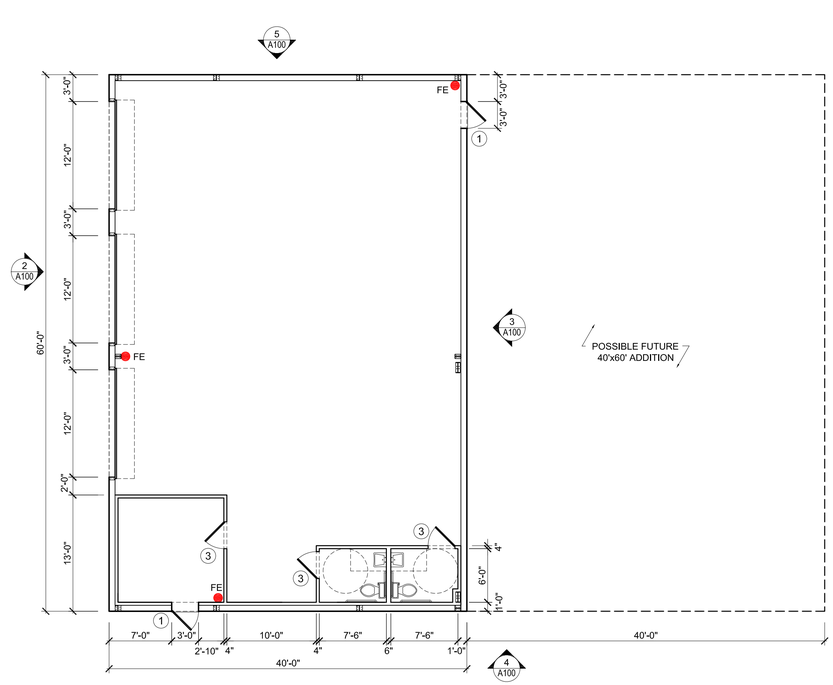

1 FLOOR PLAN
Scale : 1/8" = 1'-0"
0 2 4 8 16

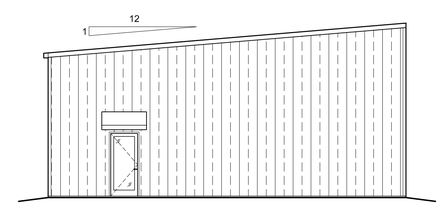

4 EAST ELEVATION
Scale : 1/8" = 1'-0"

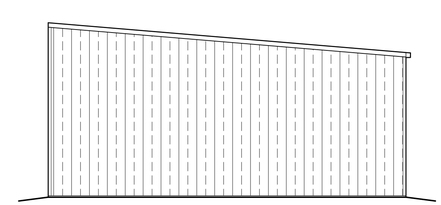

5 WEST ELEVATION
Scale : 1/8" = 1'-0"

Permit Set
11.10.2023

1560 George Perry Lee Rd.
Dunn, NC 28334

Telephone: 910.892.5286
Fax: 910.891.4396

Email:
jonas@pjstruckbodies.com

Website:
www.pjstruckbodies.com

FLOOR PLAN
& ELEVATIONS

A100

JPF PROPERTIES
HODGES CHAPEL
RD. BUILDING

ADDRESS PENDING
Dunn, NC 28334

PLUMBING SCHEDULE

DESCRIPTION	SYMBOL	
COLD WATER		CW
HOT WATER		HW
HOT WATER RECIRC.		HWRECIRC.
VENT PIPING		V
WASTE PIPING		W
CLEAN OUT @ GRADE		C.O.A.G.
FLOOR CLEAN OUT		F.C.O.
FLOOR CLEAN OUT		F.C.O.
NON FREEZE HOSE BIBB		NFHB
FLOOR DRAIN		F.D.
CHECK VALVE		
BALL VALVE		
GATE VALVE		
SHUT-OFF VALVE		
BACKFLOW PREVENTER		
FIXTURE DESIGNATION	P--	
MOUNTING HEIGHT	MH	
SHOCK ABSORBER W/BALL VALVE SHUT-OFF	SA	(SIZE PER MANUF. RECOMMENDATIONS)
HOSE BIBB	HB	MH=24"

NOTES:

1. Field verify all dimensions and conditions.
2. All work shall comply with the International Plumbing Code, the NC Building Code, and the requirements of the local inspector.
3. All work shall be done by a licensed plumbing contractor.

LEGEND

FIRE EXTINGUISHER — FE

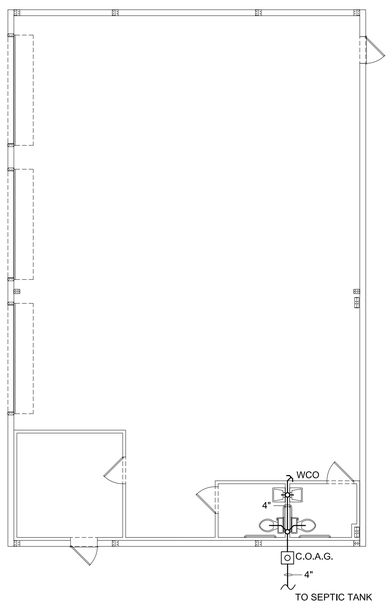

3 WASTE PLUMBING PLAN
Scale : 1/8" = 1'-0"

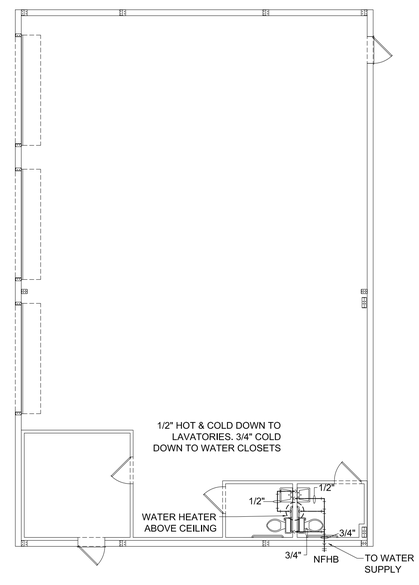

2 PLUMBING SUPPLY PLAN
Scale : 1/8" = 1'-0"

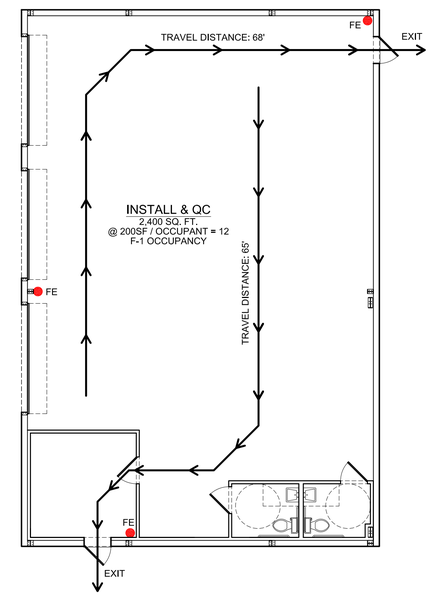

1 LIFE SAFETY PLAN
Scale : 1/8" = 1'-0"

0 2 4 8 16

Permit Set
11.10.2023

1560 George Perry Lee Rd.
Dunn, NC 28334

Telephone: 910.892.5286
Fax: 910.891.4396

Email:
jonas@pjstruckbodies.com

Website:
www.pjstruckbodies.com

PLUMBING &
LIFE SAFETY
PLANS

LS

JPF PROPERTIES
HODGES CHAPEL
RD. BUILDING

ADDRESS PENDING
Dunn, NC 28334

PANEL: TBD SCHEDULE: ____ MANUFACTURER: SQ. D NO. OF SPACES 42
VOLTS: 120/240 AMPS: 400 TYPE: "NQOD" MOUNTING: SURFACE
ENCLOSURE: NEMA 1 ____ #: 1 SHORT CIRCUIT RATING: 10K
MAIN: ☐ M.L.O.: ☒ TOP FEED: ☒ BOTTOM FEED: ☐ COPPER BUS: ☒ GROUND BAR KIT: ☒ NEUTRAL BAR KIT: ☒

L1	L2	CIRCUIT	POLES	TRIP	ASSIGNMENT	PHASE L1	PHASE L2	ASSIGNMENT	TRIP	POLES	CIRCUIT	L1	L2
TBD	*	1	1	20	OFFICE LIGHTS	O		OFFICE RECEPTACLES	20	1	2	TBD	*
*	TBD	3	1	20	RESTROOM LIGHTS		O	SHOP RECEPTACLES	20	1	4	*	TBD
TBD	*	5	1	20	SHOP LIGHTS	O		SHOP RECEPTACLES	20	1	6	TBD	*
*	TBD	7	1	20	SHOP LIGHTS		O	ROLLUP DOOR 1	20	1	8	*	TBD
TBD	*	9	1	20	EXTERIOR LIGHTS	O		ROLLUP DOOR 2	20	1	10	TBD	*
*	TBD	11	1				O	ROLLUP DOOR 3	20	1	12	*	TBD
	*	13	1			O				1	14		*
*		15	1				O			1	16	*	
	*	17	1			O				1	18		*
*		19	1				O			1	20	*	
	*	21	1			O				1	22		*
*		23	1				O			1	24	*	
	*	25	1			O				1	26		*
*		27	1				O			1	28	*	
	*	29	1			O				1	30		*
*		31	1				O			1	32	*	
	*	33	1			O				1	34		*
*		35	1				O			1	36	*	
	*	37	1			O				1	38		*
*		39	1				O			1	40	*	
	*	41	1			O				1	42		*

L1 = TBD A
L2 = TBD A

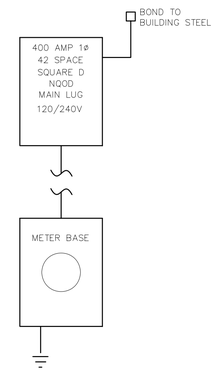

NOTES:

1. Field verify all dimensions and conditions.
2. All work shall comply with the National Electric Code, the NC Building Code, and the requirements of the local inspector.
3. All work shall be done by a licensed electrical contractor.

LEGEND

- BATTERY BACKUP EMERGENCY LIGHTING
- EXTERIOR LIGHT OVER EXIT
- BACK LIT EXIT SIGN
- LED LIGHT FIXTURE
- LED LIGHT FIXTURE NIGHT LIGHT (UNSWITCHED) — NL
- SWITCHED BRANCH CIRCUIT
- UNSWITCHED BRANCH CIRCUIT
- DUPLEX RECEPTACLE
- EXTERIOR LIGHT WALL SCONCE
- DEDICATED CIRCUIT FOR ROLLUP DOOR

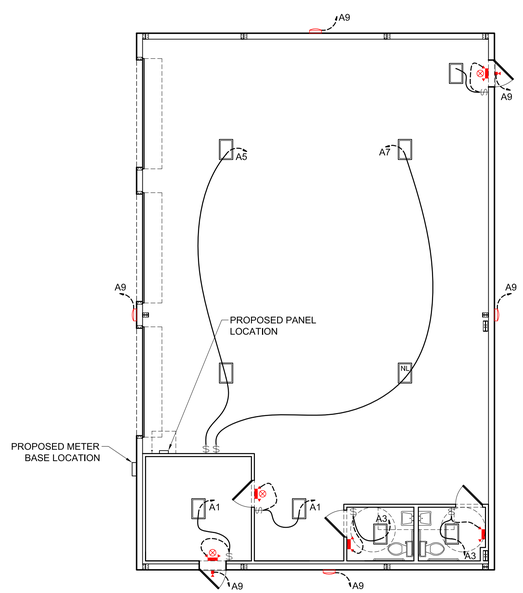

1 LIGHTING PLAN
Scale : 1/8" = 1'-0"
0 2 4 8 16

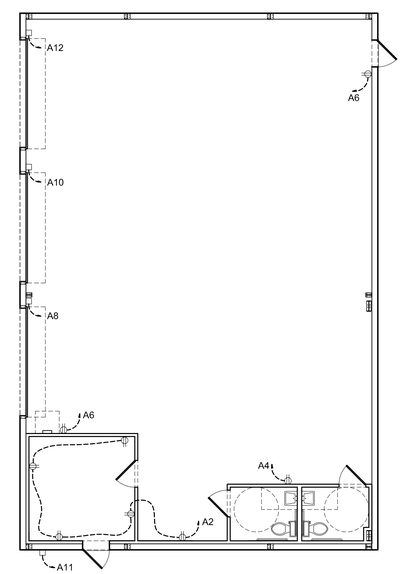

2 POWER PLAN
Scale : 1/8" = 1'-0"

Permit Set
11.10.2023

1560 George Perry Lee Rd.
Dunn, NC 28334

Telephone: 910.892.5286
Fax: 910.891.4396

Email:
jonas@pjstruckbodies.com

Website:
www.pjstruckbodies.com

ELECTRICAL
LIGHTING &
POWER PLANS

E100