11948 POLE BARN

HARNETT COUNTY, NORTH CAROLINA

Reviewed for Fire Code Compliance
Harnett County North Carolina
Roger Sullivan
09/17/2025 1:24:07 PM

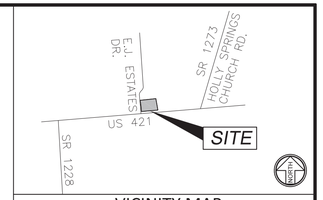

VICINITY MAP
NOT TO SCALE

GENERAL NOTES:
(REFERENCE THIS SET OF PLANS FOR HRW WATER AND SEWER STANDARD NOTES.)

1. ALL WORK SHALL COMPLY WITH HARNETT COUNTY AND NCDOT STANDARDS AND SPECIFICATIONS.
2. THIS PROJECT HAS AVAILABLE PUBLIC WATER OWNED, MAINTAINED AND OPERATED BY HARNETT REGIONAL WATER.
3. THE CONTRACTOR SHALL BE RESPONSIBLE FOR LOCATING EXISTING UTILITIES AND REPAIRING ANY DAMAGE TO SAME. UTILITY LOCATIONS AS SHOWN ON PLANS ARE APPROXIMATE AND MAY NOT BE COMPLETE. THE CONTRACTOR SHALL HAVE NORTH CAROLINA ONE CALL (1-800-632-4949) LOCATE ALL EXISTING UTILITIES PRIOR TO BEGINNING OF CONSTRUCTION.
4. PROVISIONS SHALL BE MADE TO ENSURE POSITIVE DRAINAGE ON THE SITE AT ALL TIMES. NATURAL DRAINAGE FEATURES DISTURBED BY CONSTRUCTION MUST BE RE-ESTABLISHED. NO PONDING DUE TO SPOILS STOCKPILING OR OTHER ACTIVITIES SHALL BE PERMITTED.
5. WORK IN PUBLIC RIGHT-OF-WAYS OR PRIVATE EASEMENTS SHALL BE ACCOMPLISHED BY THE CONTRACTOR ACCORDING TO THE REQUIREMENTS OR CONDITIONS OF THE ENCROACHMENT PERMIT OR OTHER LEGAL DOCUMENTS AS THOUGH DOCUMENTS WERE ISSUED IN THE CONTRACTOR NAME. THE CONTRACTOR SHALL MAINTAIN COPIES OF THESE DOCUMENTS ON THE SITES AT ALL TIMES.
6. WHEN THE CONTRACTOR IS UNABLE TO COMPLETE HIS WORK AS SHOWN ON THE PLANS BECAUSE OF AN EXISTING UTILITY, CONTRACTOR SHALL STAKE THE LOCATION OF THE UTILITY PRIOR TO PROCEEDING AND CONTACT THE ENGINEER.
7. THE CONTRACTOR SHALL NOTIFY ALL PUBLIC AGENCIES, THE OWNER, THE ENGINEER AND ALL OTHER CONCERNED PARTIES WHEN CONSTRUCTION IS TO COMMENCE. PRIOR TO ANY CONSTRUCTION A PRECONSTRUCTION MEETING SHALL BE HELD WITH THE MUNICIPALITY / AUTHORITY, THE CONTRACTOR, THE ENGINEER AND ANY OTHER INTERESTED PARTY.
8. DATA REQUIRED FOR PREPARATION OF RECORD DRAWINGS SHALL BE OBTAINED BY THE CONTRACTOR AT THE TIME FOR INSTALLATION. DATA SHALL BE ACCUMULATED BY THE CONTRACTOR DURING THE CONSTRUCTION PERIOD AND PROVIDED TO THE ENGINEER UPON COMPLETION OF THE PROJECT
9. INSPECTIONS SHALL BE CONDUCTED IN ACCORDANCE WITH ALL APPLICABLE HARNETT COUNTY, NCDNER AND NCDOT STANDARDS.
10. ALL EXCAVATED EXCESS OR WASTE SOILS AND MATERIAL SHALL BE REMOVED FROM THE SITE BY CONTRACTOR EXCEPT AS SPECIFICALLY APPROVED IN WRITING BY BOTH THE ENGINEER AND OWNER.
11. WHEN CONCRETE SIDEWALKS, CURB AND GUTTER SECTIONS OR ASPHALT PAVEMENT ARE DAMAGED DUE TO CONSTRUCTION ACTIVITIES, THEY SHALL BE REPLACED IN A TIMELY MANNER BY THE CONTRACTOR TO ASSURE THE CONTINUED USE OF THESE FACILITIES BY ALL CONCERNED.
12. CONTRACTOR IS TO COMPLY WITH ALL PROVISIONS OF THE MANUAL OF UNIFORM TRAFFIC CONTROL DEVICES WHEN WORKING ADJACENT TO AN EXISTING PUBLIC HIGHWAY RIGHT OF WAY.
13. THE CONTRACTOR WILL MAINTAIN ALL EXISTING ROADS IN A NEAT AND CLEAN CONDITION THROUGHOUT THE COURSE OF THE PROJECT CONSTRUCTION.

WATER/SEWER CAPACITY NOTE:

APPROVAL OF THE PLAT/PLAN DOES NOT GUARANTEE WATER OR SEWER TREATMENT CAPACITY. CURRENT/FUTURE CAPACITY MAY NOT BE AVAILABLE. THIS DEVELOPMENT MAY REQUIRE ADDITIONAL IMPROVEMENTS TO THE EXISTING WATER SYSTEM OR SEWER SYSTEM TO MEET FUTURE WATER AND SEWER DEMANDS PRIOR TO A PRELIMINARY PLAY, CONSTRUCTION PLAN AND/OR FINAL PLAT APPROVAL.

AS THE OWNER OF RECORD, I HEREBY FORMALLY CONSENT TO THE PROPOSED DEVELOPMENT SHOWN ON THIS SITE PLAN AND ALL REGULATIONS AND REQUIREMENTS OF THE HARNETT COUNTY ORDINANCES

OWNER SIGNATURE

9/8/25
DATE

HARNETT REGIONAL WATER STANDARD NOTES:

1. WATERLINE CONSTRUCTION AND TIE-IN WILL NEED TO BE COORDINATED AND INSPECTED BY HRW CONSTRUCTION INSPECTOR CHAD EVERETT.
2. NCDOT UTILITIES MANUAL DATED 2022 SECTION 3.4.9.1 REQUIRES FIRE HYDRANTS TO BE LOCATED AT THE BACK OF THE DITCH. WATER METERS WILL ALSO NEED TO BE LOCATED AT THE BACK OF THE DITCH. THE WATER LINE IS LOCATED AT THE FRONT OF THE DITCH.

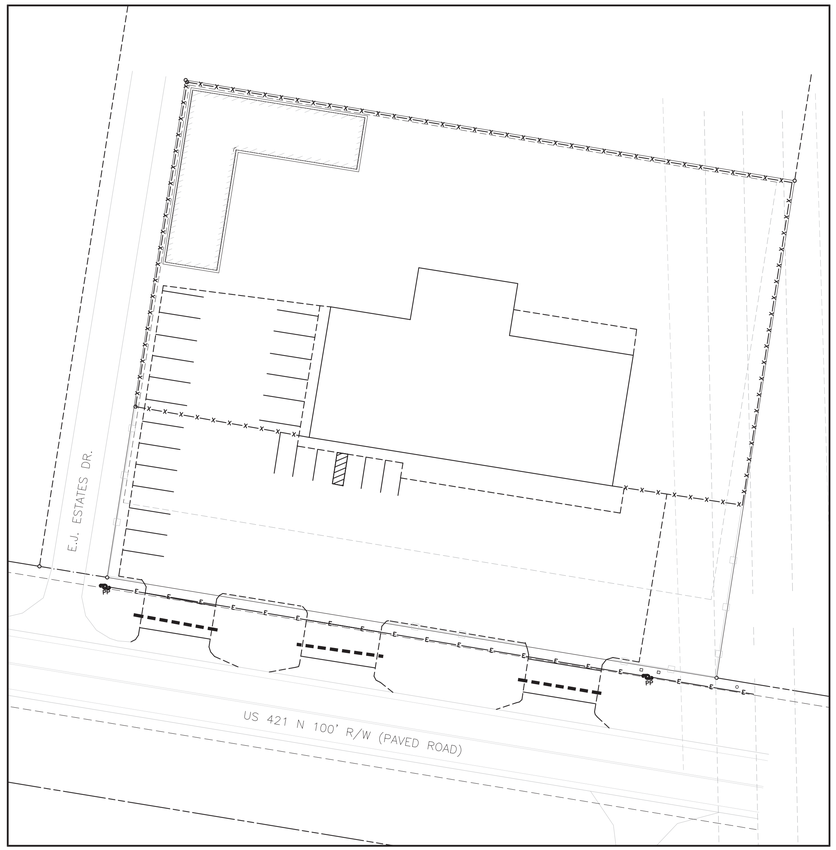

OVERALL PLAN (NTS)

NORTH

Sheet List Table

Sheet Title	*Sheet Number*	*Submittal Date*	*Sheet Revision Date*
SITE PLANS			
COVER	*G0.01*	*AUGUST, 2025*	
EXISTING CONDITION	*C1.01*	*AUGUST, 2025*	
SITE LAYOUT	*C2.01*	*AUGUST, 2025*	
EROSION CONTROL	*C3.01*	*AUGUST, 2025*	
EROSION CONTROL DETAIL	*C3.02*	*AUGUST, 2025*	
STRUCTURAL PLANS			
GENERAL NOTES	*S001*	*AUGUST, 2025*	
FOUNDATION PLAN	*S101*	*AUGUST, 2025*	
FRAMING PLAN	*S102*	*AUGUST, 2025*	
SECTIONS	*S201*	*AUGUST, 2025*	
DETAILS	*S301*	*AUGUST, 2025*	

REVISION OCCURRENCE LIST

1			
REVISION NO.	*DATE*	*REVISION DESCRIPTION*	*BY*

BOA2310-0002
PIN #: 9691-33-4886.000

DEVELOPER/OWNER

SJF HOLDINGS, LLC
5322 COOL SPRINGS ROAD
BROADWAY, NC 27505

PRELIMINARY
- FOR REVIEW ONLY -
NOT FOR CONSTRUCTION

NORTH CAROLINA PROFESSIONAL SEAL 035670 ENGINEER JOHN E. HILLIARD

FOR CIVIL ENGINEERING PLANS ONLY. SEE STRUCTURAL ENGINEER'S SEAL FOR STRUCTURAL PLANS

HILLIARD ENGINEERING, PLLC
3417 Winterwind Circle, Sanford, NC 27330
PO Box 249, Sanford, NC 27331
Phone: (919) 352-2834
e-mail: jhilliard@hilliardengineering.com
NC License #: P-0836

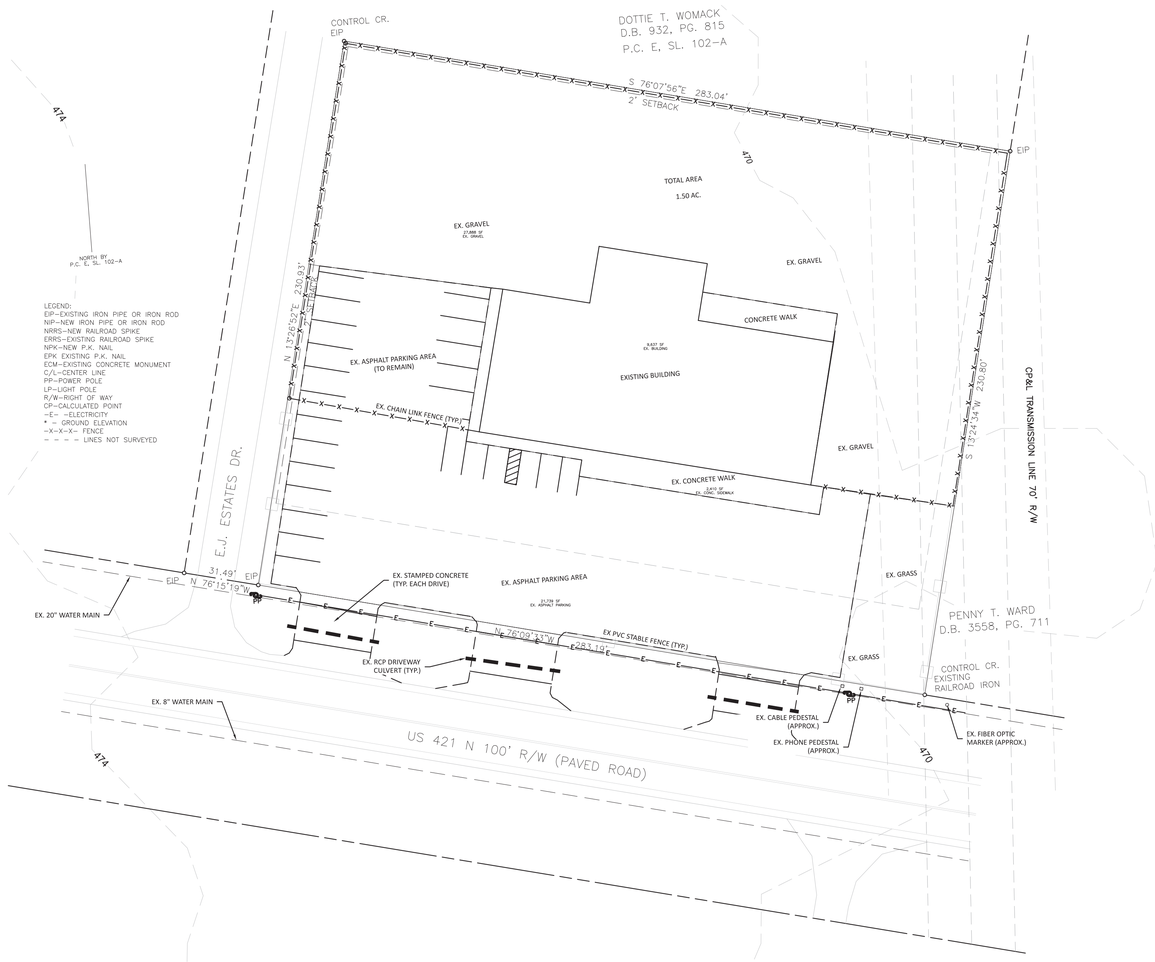

SCALE IN FEET

0' 15 30 60

Know what's below
Call before you dig.
Dial 811
Or Call 800-632-4949

NO.	REVISION DESCRIPTION:	DATE:
1		
2		

PRELIMINARY - FOR REVIEW ONLY - NOT FOR CONSTRUCTION

NORTH CAROLINA PROFESSIONAL SEAL 035670 ENGINEER HAROLD E. HILLIARD

3417 Winterwind Circle, Sanford, NC 27330
PO Box 249, Sanford, NC 27331
Phone: (919) 352-2834
e-mail: jhilliard@hilliardengineering.com
NC License #: P-0836

HILLIARD ENGINEERING, PLLC

EXISTING CONDITIONS

11948 POLE BARN
HARNETT COUNTY, NORTH CAROLINA

DESIGNED BY:	JEH
DRAWN BY:	JEH
APPROVED BY:	JEH
SHEET:	C1.01
	CIVIL

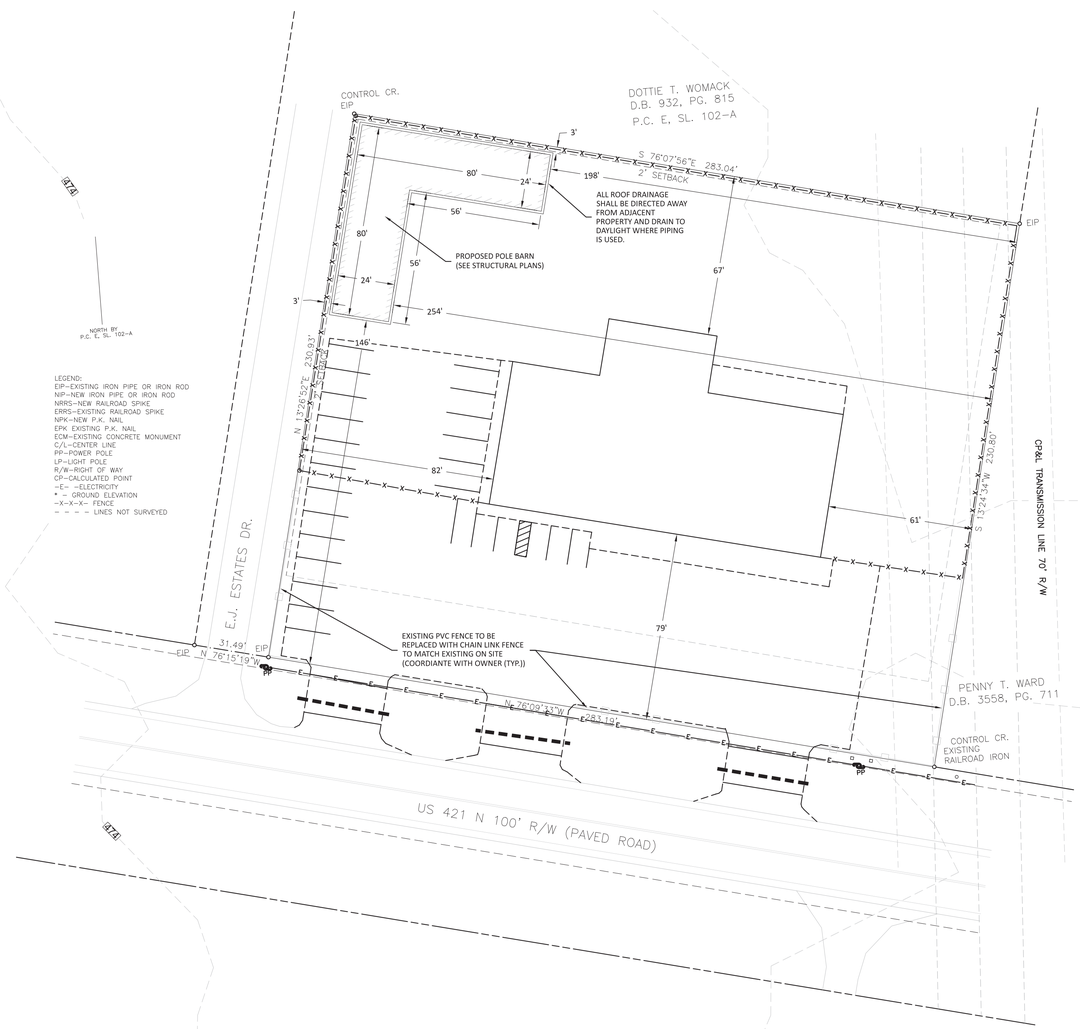

LEGEND:
EIP–EXISTING IRON PIPE OR IRON ROD
NIP–NEW IRON PIPE OR IRON ROD
NRRS–NEW RAILROAD SPIKE
ERRS–EXISTING RAILROAD SPIKE
NPK–NEW P.K. NAIL
EPK EXISTING P.K. NAIL
ECM–EXISTING CONCRETE MONUMENT
C/L–CENTER LINE
PP–POWER POLE
LP–LIGHT POLE
R/W–RIGHT OF WAY
CP–CALCULATED POINT
–E– –ELECTRICITY
• – GROUND ELEVATION
–X–X–X– FENCE
– – – – LINES NOT SURVEYED

Owner - SJF HOLDINGS, LLC

Mailing Address - 5322 COOL SPRINGS ROAD, BROADWAY, NC 27505
Physical Address - 11948 US-421, Broadway, NC 27505

PIN - 9691-33-4886.000
Site Acreage: 1.5 acres
Township: Upper Little River

Zoning - RA-30
Zoning Jurisdiction - Harnett County

Future Land Use: Employment
Not Within Military Corridor Overlay District
Not in Highway Corridor Overlay District
Not Within Agri District
No wetlands exist on the property per Harnett County GIS

Coordinates: 35.4369, -79.0222
(35d,26m13sN, 79d,01m,20sW)
Stream Index: 18-10-(2)
Stream Name: Daniels Creek (Tributary)
Description: From dam at Watsons Lake to Cape Fear River
Classification: C
Date of Class.: June 30, 1973
River Basin: Cape Fear

TOTAL SITE: 65,340 SF

Existing Impervious Surfaces:
Existing Gravel Drive/Parking: 27,888 sf
Existing Building: 9,637 sf
Existing Asphalt Parking: 21,739 sf
Existing Concrete Sidewalk: 2,410 SF
Total Existing Impervious: 61,674 sf = 94%

Proposed Impervious Surfaces:
Proposed Building: 3,260 sf (offsets gravel area)
Total Existing + Proposed Impervious: 61,674 sf=94%

1. PROPOSED SIGNS WILL BE PLACED AT LEAST 20' FROM THE INTERSECTION R/W'S AND A SEPARATE PERMIT WILL BE REQUIRED BEFORE CONSTRUCTION
2. A CERTIFIED FOUNDATION SURVEY, OR SETBACK VERIFICATION SURVEY, IS REQUIRED TO BE SUBMITTED AT THE COMPLETION OF FOUNDATION CONSTRUCTION
3. THIS DEVELOPMENT IS NOT WITHIN ONE MILE OF A VOLUNTARY AGRICULTURAL DISTRICT
4. ALL FIRE HYDRANTS MUST BE WITHIN 400' OF THE BUILDING.
5. ALL PROPOSED LIGHTING WILL MEET THE UNIFIED DEVELOPMENT ORDINANCE.

PROJECT #:
BOA PERMIT #: BOA2310-0002 APPROVED 12/11/23
BUSINESS OPERATING HOURS WILL REMAIN UNCHANGED

EXISTING WATER AND SEWER SERVICES SHALL REMAIN UNCHANGED

US-421 IS ON THE HARNETT COUNTY COMPREHENSIVE TRANSPORTATION PLAN

CONTRACTOR SHALL NOTE UTILITY CONSTRUCTION SEQUENCE ON HRW WEBSITE: *www.harnettwater.org/important-forms*

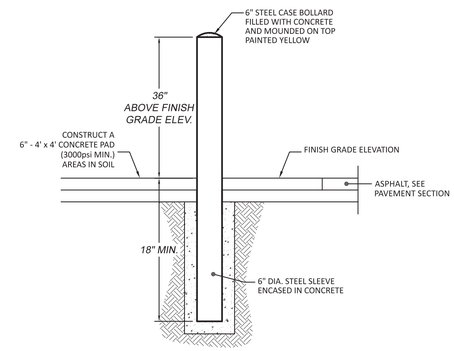

CONCRETE BOLLARD
(TO BE PLACED WHERE REQUIRED BY OWNER, IF APPLICABLE)

SCALE: N.T.S.

PRELIMINARY - FOR REVIEW ONLY - NOT FOR CONSTRUCTION

3417 Winterwind Circle, Sanford, NC 27330
PO Box 249, Sanford, NC 27331
Phone: (919) 352-2834
e-mail: jhilliard@hilliardengineering.com
NC License #: P-0836

HILLIARD ENGINEERING, PLLC

NORTH CAROLINA PROFESSIONAL SEAL 035670 ENGINEER JAMES H. HILLIARD

SITE LAYOUT

11948 POLE BARN
HARNETT COUNTY, NORTH CAROLINA

DESIGNED BY:	JEH
DRAWN BY:	JEH
APPROVED BY:	JEH
SHEET:	C2.01
	CIVIL

Know what's below Call before you dig. Dial 811 Or Call 800-632-4949

SCALE IN FEET
0' 15 30 60

NO.	REVISION DESCRIPTION:	DATE:
1		
2		

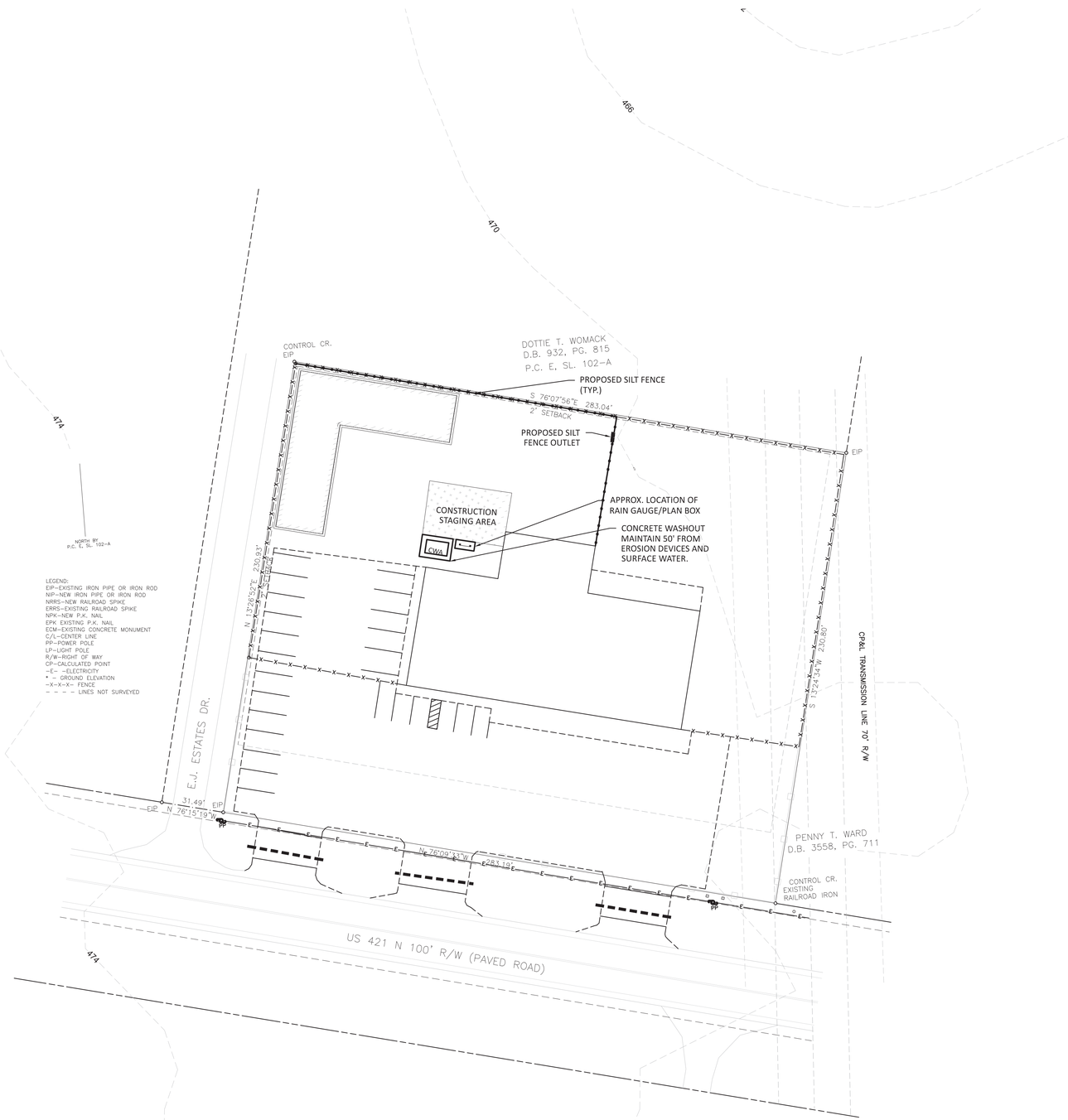

LEGEND:
EIP–EXISTING IRON PIPE OR IRON ROD
NIP–NEW IRON PIPE OR IRON ROD
NRRS–NEW RAILROAD SPIKE
ERRS–EXISTING RAILROAD SPIKE
NPK–NEW P.K. NAIL
EPK EXISTING P.K. NAIL
ECM–EXISTING CONCRETE MONUMENT
C/L–CENTER LINE
PP–POWER POLE
LP–LIGHT POLE
R/W–RIGHT OF WAY
CP–CALCULATED POINT
–E– –ELECTRICITY
• – GROUND ELEVATION
–X–X–X– FENCE
– – – – LINES NOT SURVEYED

GROUND STABILIZATION REQUIREMENTS

CONTRACTOR SHALL BE REQUIRED TO ESTABLISH GROUND STABILIZATION AS PER FOLLOWING CHART.

SITE AREA DESCRIPTION	STABILIZATION TIME FRAME	STABILIZATION TIME FRAME EXCEPTIONS	APPLICABLE THIS PROJECT
PERIMETER DIKES, SWALES, DITCHES AND	7 DAYS	NONE	YES
HIGH QUALITY WATER (HQW) ZONES FLATTER THAN 4:1	7 DAYS	NONE	NO
SLOPES STEEPER THAN 3:1	7 DAYS	IF SLOPES ARE 10' OR LESS IN LENGTH AND ARE NOT STEEPER THAN 2:1 14 DAYS ARE ALLOWED	NO
SLOPES 3:1 OR	14 DAYS	7 DAYS FOR SLOPES GREATER THAN 50 FEET IN LENGTH	YES
ALL OTHER AREAS WITH SLOPES FLATTER THAN 4:1	14 DAYS	NONE (EXCEPT FOR PERIMETER AND HQW ZONES)	YES
TYPICAL GROUND COVER STABILIZATION TYPES - GRASS AND OR SOD, WHEAT STRAW, MULCH, BIODEGRADABLE STRAW MATTING, SYNTHETIC MATTING, ETC.			

SEEDING SCHEDULE FOR PERMANENT VEGETATION

SCHEDULE NO.	COMMON NAME OF SEED	RATE PER ACRE (LBS.)	PLANTING DATES
1	COMMON BERMUDA (HULLED)	210	MARCH 16 TO AUG. 31
	TALL FESCUE	140	
2	COMMON BERMUDA (UNHULLED)	175	SEPT. 1 TO MARCH 15

NOTES:

GIANT BERMUDA SEED, INCLUDING NK-37, SHALL NOT BE USED.

THE CONTRACTOR SHALL OBTAIN A SATISFACTORY STAND OF PERENNIAL VEGETATION WHOSE ROOT SYSTEM SHALL BE DEVELOPED SUFFICIENTLY TO SURVIVE DRY PERIODS AND WINTER WEATHER, AND BE CAPABLE OF RE-ESTABLISHMENT IN THE SPRING. THE PERENNIAL VEGETATIVE COVER SHALL HAVE A MINIMUM COVERAGE DENSITY OF 70% FOR THE SEEDED AREAS. CONTRACTOR SHALL DETERMINE ALL RATES OF APPLICATION NECESSARY TO PRODUCE THE REQUIRED STAND OF GRASS, AND SHALL FOLLOW THE APPLICATION PROCEDURES AS SPECIFIED HEREIN.

HORZ. SCALE 0 30 60 FEET

811 Know what's below Call before you dig. Dial 811 Or Call 800-632-4949

NO.	REVISION DESCRIPTION:	DATE:
1		
2		

PRELIMINARY - FOR REVIEW ONLY - NOT FOR CONSTRUCTION

3417 Winterwind Circle, Sanford, NC 27330
PO Box 249, Sanford, NC 27331
Phone: (919) 352-2834
e-mail: jhilliard@hilliardengineering.com
NC License #: P-0836

HILLIARD ENGINEERING, PLLC

NORTH CAROLINA PROFESSIONAL SEAL 035670 ENGINEER JAMES H. HILLIARD

EROSION CONTROL

11948 POLE BARN
HARNETT COUNTY, NORTH CAROLINA

DESIGNED BY:	JEH
DRAWN BY:	JEH
APPROVED BY:	JEH

SHEET: C3.01
CIVIL

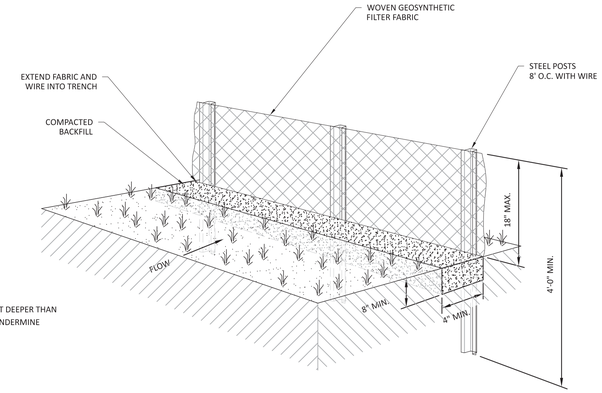

NOTE:

REMOVE SEDIMENT DEEPER THAN 12". REPAIR ANY UNDERMINE IMMEDIATELY.

CONSTRUCTION SPECIFICATION

1. CONSTRUCT THE SEDIMENT BARRIER OF STANDARD STRENGTH OR EXTRA STRENGTH SYNTHETIC FILTER FABRICS.

2. ENSURE THAT THE HEIGHT OF THE SEDIMENT FENCE DOES NOT EXCEED 24 INCHES ABOVE GROUND SURFACE.

3. CONSTRUCT THE FILTER FABRIC FROM A CONTINUOUS ROLL CUT TO THE LENGTH OF THE BARRIER TO AVOID JOINTS. WHEN JOINTS ARE NECESSARY, SECURELY FASTEN THE FILTER CLOTH ONLY AT A SUPPORT POST WITH 4 FEET MINIMUM OVERLAP TO THE NEXT POST.

4. SUPPORT STANDARD STRENGTH FILTER FABRIC BY WIRE MESH FASTENED SECURELY TO THE UPSLOPE SIDE OF THE POSTS. EXTEND THE WIRE MESH SUPPORT TO THE BOTTOM OF THE TRENCH. FASTEN THE WIRE REINFORCEMENT, THEN FABRIC ON THE UPSLOPE SIDE OF THE FENCE POST. WIRE OR PLASTIC ZIP TIES SHOULD HAVE MINIMUM 50 POUND TENSILE STRENGTH.

5. WHEN A WIRE MESH SUPPORT FENCE IS USED, SPACE POSTS A MAXIMUM OF 8 FEET APART. SUPPORT POSTS SHOULD BE DRIVEN SECURELY INTO THE GROUND A MINIMUM OF 24 INCHES.

6. EXTRA STRENGTH FILTER FABRIC WITH 6 FEET POST SPACING DOES NOT REQUIRE WIRE MESH SUPPORT FENCE. SECURELY FASTEN THE FILTER FABRIC DIRECTLY TO THE POSTS. WIRE OR PLASTIC ZIP TIES SHOULD HAVE MINIMUM 50 POUND TENSILE STRENGTH.

7. EXCAVATE A TRENCH APPROXIMATELY 4 INCHES WIDE AND 8 INCHES DEEP ALONG THE PROPOSED LINE OF POSTS AND UPSLOPE FROM THE BARRIER.

8. PLACE 12 INCHES OF THE FABRIC ALONG THE BOTTOM AND SIDE OF THE TRENCH.

9. BACKFILL THE TRENCH WITH SOIL PLACED OVER THE FILTER FABRIC AND COMPACT. THOROUGH COMPACTION OF THE BACKFILL IS CRITICAL TO SILT FENCE PERFORMANCE.

10. DO NOT ATTACH FILTER FABRIC TO EXISTING TREES.

SF SILT FENCE DETAIL

SCALE: N.T.S.

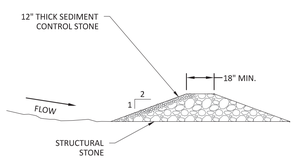

CROSS SECTION

NOTES:

1. STRUCTURAL STONE SHALL BE CLASS "B" STONE FOR EROSION CONTROL PURPOSES. SEDIMENT CONTROL STONE SHALL BE #5 OR #57 STONE.
2. OUTLETS TO BE PLACED AT LOW POINTS ALONG SILT FENCE.

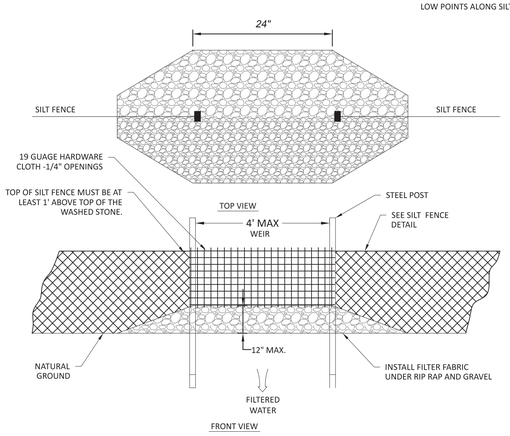

FRONT VIEW

CONSTRUCTION SPECIFICATION

1. PLACE STONE TO THE LINES AND DIMENSIONS SHOWN IN THE PLAN ON A FILTER FABRIC FOUNDATION.
2. KEEP THE CENTER STONE SECTION AT LEAST 9 INCHES BELOW NATURAL GROUND LEVEL WHERE THE DAM ABUTS THE CHANNEL BANKS.
3. EXTEND STONE AT LEAST 1.5 FEET BEYOND THE DITCH BANK TO KEEP WATER FROM CUTTING AROUND THE ENDS OF THE CHECK DAM.
4. PROTECT THE CHANNEL AFTER THE DAM FROM HEAVY FLOW THAT COULD CAUSE EROSION.
6. MAKE SURE THAT THE CHANNEL REACH ABOVE THE MOST UPSTREAM DAM IS STABLE.
7. ENSURE THAT OTHER AREAS OF THE CHANNEL, SUCH AS CULVERT ENTRANCES BELOW THE DAM, ARE NOT SUBJECT TO DAMAGE OR BLOCKAGE FROM DISPLACED STONES.
8. SEE SILT FENCE DETAIL FOR CONSTRUCTION SPECIFICATIONS.

MAINTENANCE

INSPECT DAM AND CHANNELS AT LEAST WEEKLY AND AFTER EACH SIGNIFICANT (1/2 INCH OR GREATER) RAINFALL EVENT AND REPAIR IMMEDIATELY. CLEAN OUT SEDIMENT, STRAW, LIMBS, OR OTHER DEBRIS THAT COULD CLOG THE CHANNEL WHEN NEEDED.

ANTICIPATE SUBMERGENCE AND DEPOSITION ABOVE THE DAM AND EROSION FROM HIGH FLOWS AROUND THE EDGES OF THE DAM. CORRECT ALL DAMAGE IMMEDIATELY. IF SIGNIFICANT EROSION OCCURS AROUND DAM, ADDITIONAL MEASURES CAN BE TAKEN SUCH AS, INSTALLING A PROTECTIVE RIPRAP LINER IN THAT PORTION OF THE CHANNEL (PRACTICE 6.31, RIPRAP-LINE AND PAVED CHANNELS).

REMOVE SEDIMENT ACCUMULATED BEHIND THE DAMS AS NEEDED TO PREVENT DAMAGE TO CHANNEL VEGETATION, ALLOW THE CHANNEL TO DRAIN THROUGH THE DAM, AND PREVENT LARGE FLOWS FROM CARRYING SEDIMENT OVER THE DAM.

ADD STONES TO DAM AS NEEDED TO MAINTAIN DESIGN HEIGHT AND CROSS SECTION.

SFO SILT FENCE OUTLET DETAIL

SCALE: N.T.S.

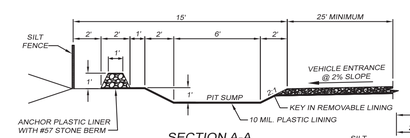

SECTION A-A

NOTES :
1. ACTUAL LAYOUT TO BE DETERMINED IN FIELD.
2. THE "CONCRETE WASHOUT" SIGN SHALL BE INSTALLED WITHIN 30 FEET OF THE TEMPORARY CONCRETE WASHOUT FACILITY.
3. PIT CAPACITY IS MINIMUM OF 6 CUBIC FEET PER 10 CUBIC YARDS OF CONCRETE.

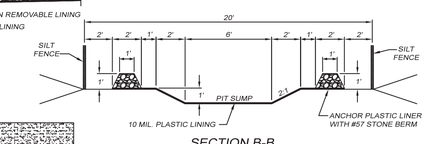

SECTION B-B

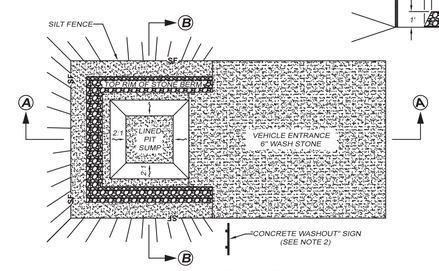

PLAN VIEW

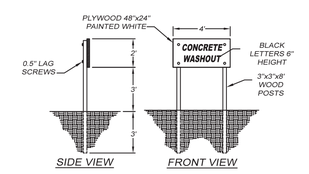

SIDE VIEW FRONT VIEW

"CONCRETE WASHOUT" SIGN DETAILS

MAINTENANCE:

1. MAINTAINING TEMPORARY CONCRETE WASHOUT SHALL INCLUDE REMAINING AND DISPOSING OF HARDENED CONCRETE AND / OR SLURRY AND RETURNING THE FACILITIES TO A FUNCTIONAL CONDITION.
2. FACILITY SHALL BE CLEANED OR RECONSTRUCTED IN A NEW AREA ONCE WASHOUT BECOMES TWO-THIRDS

CWP CONCRETE WASHOUT PIT

NOT TO SCALE

811 Know what's below. Call before you dig. Dial 811 Or Call 800-632-4949

NO.	REVISION DESCRIPTION:	DATE:
1		
2		

PRELIMINARY - FOR REVIEW ONLY - NOT FOR CONSTRUCTION

3417 Winterwind Circle, Sanford, NC 27330
PO Box 249, Sanford, NC 27331
Phone: (919) 352-2834
e-mail: jhilliard@hilliardengineering.com
NC License #: P-0836
HILLIARD ENGINEERING, PLLC

NORTH CAROLINA PROFESSIONAL SEAL 035670 ENGINEER JAMES HARRIS HILLIARD, III

EROSION CONTROL DETAIL

11948 POLE BARN
HARNETT COUNTY, NORTH CAROLINA

DESIGNED BY:	JEH
DRAWN BY:	JEH
APPROVED BY:	JEH

SHEET: C3.02

CIVIL

X

SXXX NOT USED SCALE:

X

SXXX NOT USED SCALE:

4

S001 SCHEDULE SCALE: N/A

CONCRETE PIER SCHEDULE					
MARK	EMBEDMENT DEPTH	PLAN SIZE	REINFORCEMENT		NOTES
			VERTICAL	HORIZONTAL TIES	
F2	6'-0	2'-6 ∅	N/A	N/A	1, 2, 3
F3	6'-0	3'-0 ∅	N/A	N/A	1, 2, 3

NOTES:
1.) SEE FOUNDATION PLAN FOR TOP OF FOOTING ELEVATIONS.
2.) SEE DETAIL 1/S301 FOR TYPICAL PIER DETAIL.
4.) SEE PLAN FOR PIER ORIENTATION.

1

S001 GENERAL NOTES SCALE: N/A

GENERAL CONSTRUCTION SPECIFICATION

1. THE FOLLOWING DOCUMENTS ARE THE PROPERTY OF RED ENGINEERING & DESIGN, INC. FOR USE SOLELY FOR THIS PROJECT AND SHALL NOT BE REPRODUCED, COPIED, OR USED FOR OTHER PURPOSES WITHOUT WRITTEN PERMISSION FROM RED ENGINEERING & DESIGN, INC.

2. NO OTHER PARTY MAY REVISE, ALTER, OR DELETE THESE CONSTRUCTION DOCUMENTS WITHOUT WRITTEN PERMISSION FROM RED ENGINEERING & DESIGN, INC.

3. THIS STRUCTURE IS ONLY STABLE IN ITS COMPLETED FORM. THE CONTRACTOR SHALL PROVIDE ALL REQUIRED TEMPORARY BRACING DURING CONSTRUCTION TO STABILIZE THE STRUCTURE. TEMPORARY SHORING AND BRACING METHODS ARE NOT THE RESPONSIBILITY OF RED ENGINEERING & DESIGN, INC. AND ARE BEYOND THE SCOPE OF THESE DRAWINGS.

4. THE SER IS NOT RESPONSIBLE FOR CONSTRUCTION SEQUENCES, METHODS, OR TECHNIQUES IN CONNECTION WITH THE CONSTRUCTION OF THIS STRUCTURE. THE SER WILL NOT BE HELD RESPONSIBLE FOR THE CONTRACTOR'S FAILURE TO CONFORM TO THE CONSTRUCTION DOCUMENTS, SHOULD ANY NON-CONFORMITIES OCCUR.

5. STRUCTURAL DRAWINGS SHALL BE USED IN CONJUNCTION WITH AND COORDINATED WITH THE ARCHITECTURAL, MECHANICAL, PLUMBING, ELECTRICAL, AND CIVIL DRAWINGS. THIS COORDINATION IS NOT THE RESPONSIBILITY OF THE SER. SHOULD ANY DISCREPANCIES BECOME APPARENT THE CONTRACTOR SHALL NOTIFY RED ENGINEERING & DESIGN, INC. BEFORE ANY CONSTRUCTION BEGINS.

6. VERIFICATION OF ASSUMED FIELD CONDITIONS IS NOT THE RESPONSIBILITY OF THE STRUCTURAL ENGINEER OF RECORD. THE CONTRACTOR SHALL VERIFY THE FIELD CONDITIONS FOR ACCURACY AND REPORT ANY DISCREPANCIES TO RED ENGINEERING & DESIGN, INC. BEFORE CONSTRUCTION BEGINS.

7. THE STRUCTURAL ENGINEER OF RECORD IS NOT RESPONSIBLE FOR ANY SECONDARY STRUCTURAL ELEMENTS OR NON-STRUCTURAL ELEMENTS, EXCEPT FOR THE ELEMENTS SPECIFICALLY NOTED ON THE STRUCTURAL DRAWINGS.

X

SXXX NOT USED SCALE:

X

SXXX NOT USED SCALE:

X

SXXX NOT USED SCALE:

2

S001 MATERIAL SPECIFICATION SCALE: N/A

MATERIAL SPECIFICATION

1. ALL CONCRETE CONSTRUCTION SHALL CONFORM TO THE REQUIREMENTS OF:
   a. ACI 318-19 "BUILDING CODE REQUIREMENTS FOR STRUCTURAL CONCRETE"
   b. ACI 301-20 "SPECIFICATIONS FOR STRUCTURAL CONCRETE"
   c. ACI 117-10 "SPECIFICATIONS FOR TOLERANCES FOR CONCRETE CONSTRUCTION AND MATERIALS."
   d. ACI 211.1-09 "STANDARD PRACTICE FOR SELECTING PROPORTIONS FOR NORMAL, HEAVYWEIGHT, AND MASS CONCRETE – PROCEDURE FOR MIX DESIGN"
   e. CRSI 2018 "MANUAL OF STANDARD PRACTICE, 29TH ED."
   f. CONCRETE MIXTURES SHALL HAVE THE FOLLOWING PROPERTIES:
      i. FOOTINGS, FOUNDATIONS, FOUNDATION WALLS, COLUMNS
         a. NORMAL WEIGHT CONCRETE = 145pcf MAX
         b. MIN. 28-DAY COMPRESSIVE STRENGTH = 4000psi
         c. CLASSIFIED AS EXPOSURE CLASS F1
         d. NOMINAL MAXIMUM AGGREGATE SIZE = $\frac{3}{4}$"
         e. MAX. WATER/CEMENT RATIO = 0.55
         f. TARGET AIR CONTENT = 5.0%
   g. STEEL REINFORCEMENT SHALL COMPLY WITH THE FOLLOWING SPECIFICATIONS:
      i. REINFORCING BARS (ASTM A615), GRADE 60, DEFORMED
      ii. PLAIN-STEEL WELDED WIRE REINFORCEMENT (ASTM A185), FLAT SHEETS ONLY

2. ALL ROUGH CARPENTRY SHALL CONFORM TO THE REQUIREMENTS OF:
   a. NDS-2015, NATIONAL DESIGN SPECIFICATIONS FOR WOOD CONSTRUCTION
      i. ALL SOLID SAWN LUMBER SHALL BE SPF-S #2 OR BETTER (Fb=775psi, Ft=350psi, Fv=135psi, E=1,100,000psi) U.N.O.
   b. AWPA-P5, STANDARD FOR WATERBORNE PRESERVATIVES
      i. ALL SOLID SAWN LUMBER DESIGNATED "PT" SHALL BE PRESERVATIVELY TREATED (AWPA UC4A GROUND CONTACT – GENERAL USE) SYP#2 OR BETTER, U.N.O.
   c. NAILS (ASTM F1667-15)
      i. 16d COMMON – 0.162" DIA. x $3\frac{1}{2}$" LENGTH
      ii. 10d COMMON – 0.148" DIA. x 3" LENGTH
      iii. 8d COMMON – 0.131" DIA. x $2\frac{1}{2}$" LENGTH

3. ALL PRE-ENGINEERED WOOD TRUSSES SHALL BE IN ACCORDANCE WITH:
   a. ANSI/TPI 1-2014, "NATIONAL DESIGN STANDARD FOR METAL PLATE CONNECTED WOOD TRUSS CONSTRUCTION."

X

SXXX NOT USED SCALE:

X

SXXX NOT USED SCALE:

X

SXXX NOT USED SCALE:

3

S001 DESIGN CRITERIA SCALE: N/A

DESIGN CRITERIA

1. BUILDING CODES
   a. NORTH CAROLINA BUILDING CODE 2018 EDITION
   b. MINIMUM DESIGN LOADS FOR BUILDING AND OTHER STRUCTURES, ASCE 7-22

2. DEAD LOAD
   ROOF

ROOFING	3 PSF
METAL DECK	2 PSF
COLLATERAL (PM&E)	5 PSF

3. LIVE LOAD

ROOF	20 PSF

4. SOIL LOADS

MIN ALLOWABLE SOIL BEARING PRESSURE	2500 PSF
UNIT WEIGHT OF SOIL	120 PCF (ASSUMED)

5. SNOW LOAD

GROUND SNOW LOAD, Pg	20 PSF

6. WIND LOADS

WIND SPEED, V (3 SECOND GUST)	110 MPH
RISK CATEGORY	I
EXPOSURE	B

7. SEISMIC LOADS

RISK CATEGORY	I
SOIL SITE CLASS	D, ASSUMED
MAPPED SPECTRAL RESPONSE ACCELERATION, Ss	0.200
MAPPED SPECTRAL RESPONSE ACCELERATION, S1	0.074
LONG-PERIOD TRANSITION PERIOD, Tl	8 SEC.
SEISMIC FORCE RESISTING SYSTEM	BUILDING FRAME SYSTEM, ORDINARY STEEL CONCENTRICALLY BRACED FRAMES
SEISMIC DESIGN CATEGORY	B

8. A PROGRAM OF SPECIAL INSPECTIONS IS NOT REQUIRED FOR THIS PROJECT. PER NORTH CAROLINA STATE BUILDING CODE, 2018 EDITION SECTION 1704.2.

NORTH CAROLINA PROFESSIONAL SEAL ENGINEER PRELIMINARY

RED ENGINEERING & DESIGN
STRUCTURAL ENGINEERS
126 SALEM TOWNE CT
APEX, NORTH CAROLINA 27502
TEL: (919) 621-0045
RED@ENGINEERINGDESIGN.COM
C-3479

Client: HILLIARD ENGINEERING
PO BOX 249
SANFORD,NC

Project: NEW CONSTRUCTION OF
POLE BARN
11948 PAUL GREEN MEM. HWY, US-421
BROADWAY, NC 27505

GENERAL NOTES

Project #:	25-E009
Date:	08.30.25
Drawn/Design By:	RED
DWG. Checked By:	BM
Scale:	VARIES

REVISIONS

No.	Date:	Remarks
1		
2		
3		
4		
5		

Sheet Number

S001

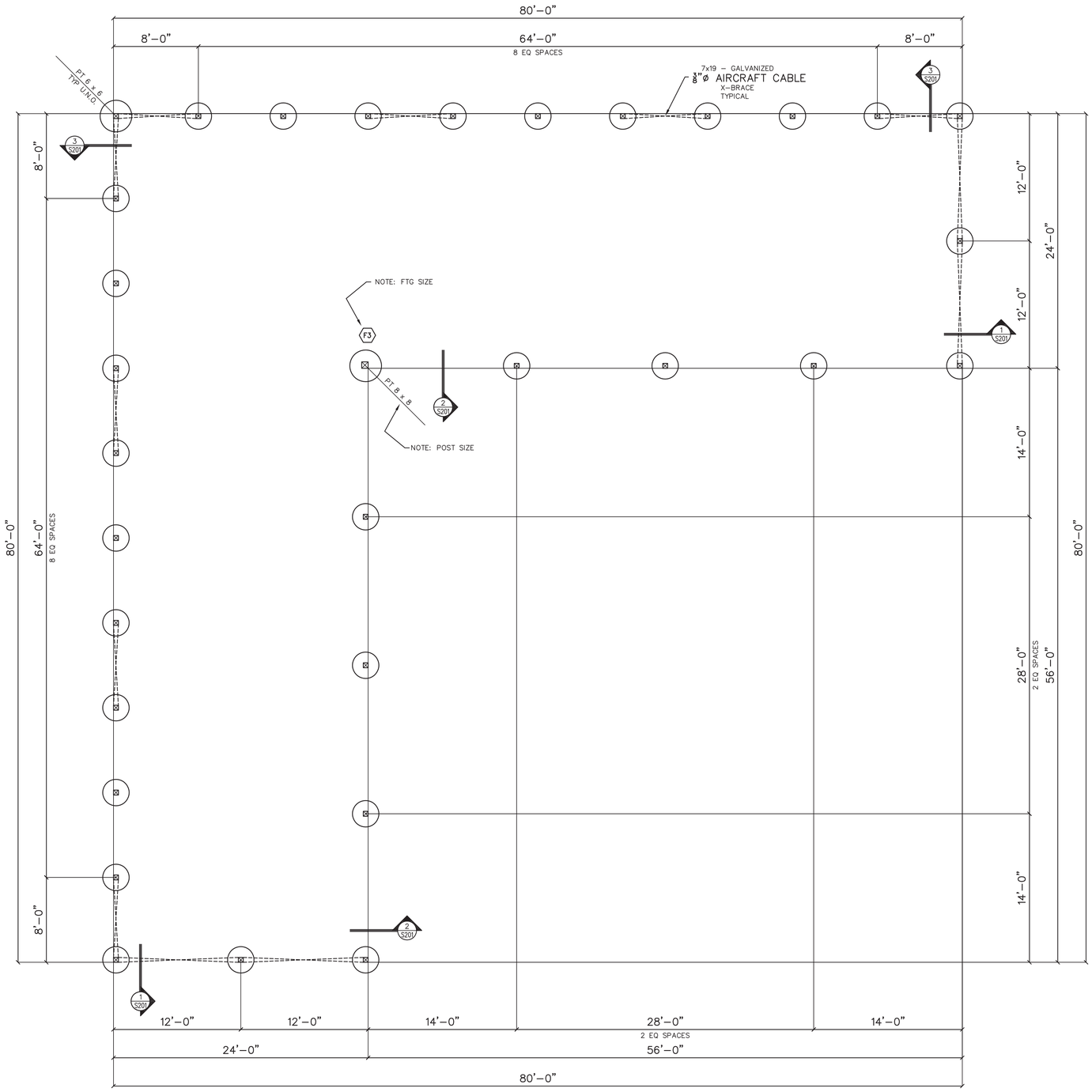

1 PLAN
1" = 1'-0
FOUNDATION PLAN

NOTES:
1.) TOP/FTG ELEV (+0'-0) BELOW ADJACENT GRADE.
2.) ALL FOOTINGS TO BE TYPE "F2", U.N.O.

X		
SXXX	NOT USED	SCALE:
X		
SXXX	NOT USED	SCALE:
X		
SXXX	NOT USED	SCALE:
1		
S101	PLAN	SCALE: 3/16" = 1'-0

NORTH CAROLINA PROFESSIONAL SEAL ENGINEER
PRELIMINARY

RED ENGINEERING & DESIGN
STRUCTURAL ENGINEERS
126 SALEM TOWNE CT
APEX, NORTH CAROLINA 27502
TEL: (919) 221-0408
REDENGINEERINGDESIGN.COM

C-3479

Client:
HILLIARD ENGINEERING
PO BOX 249
SANFORD,NC

Project:
NEW CONSTRUCTION OF
POLE BARN
11948 PAUL GREEN MEM. HWY, US-421
BROADWAY, NC 27505

FOUNDATION PLAN

Project #:
25-E009

Date:
08.30.25

Drawn/Design By:
RED

DWG. Checked By:
BM

Scale:
VARIES

REVISIONS

No.	Date:	Remarks
1		
2		
3		
4		

Sheet Number
S101

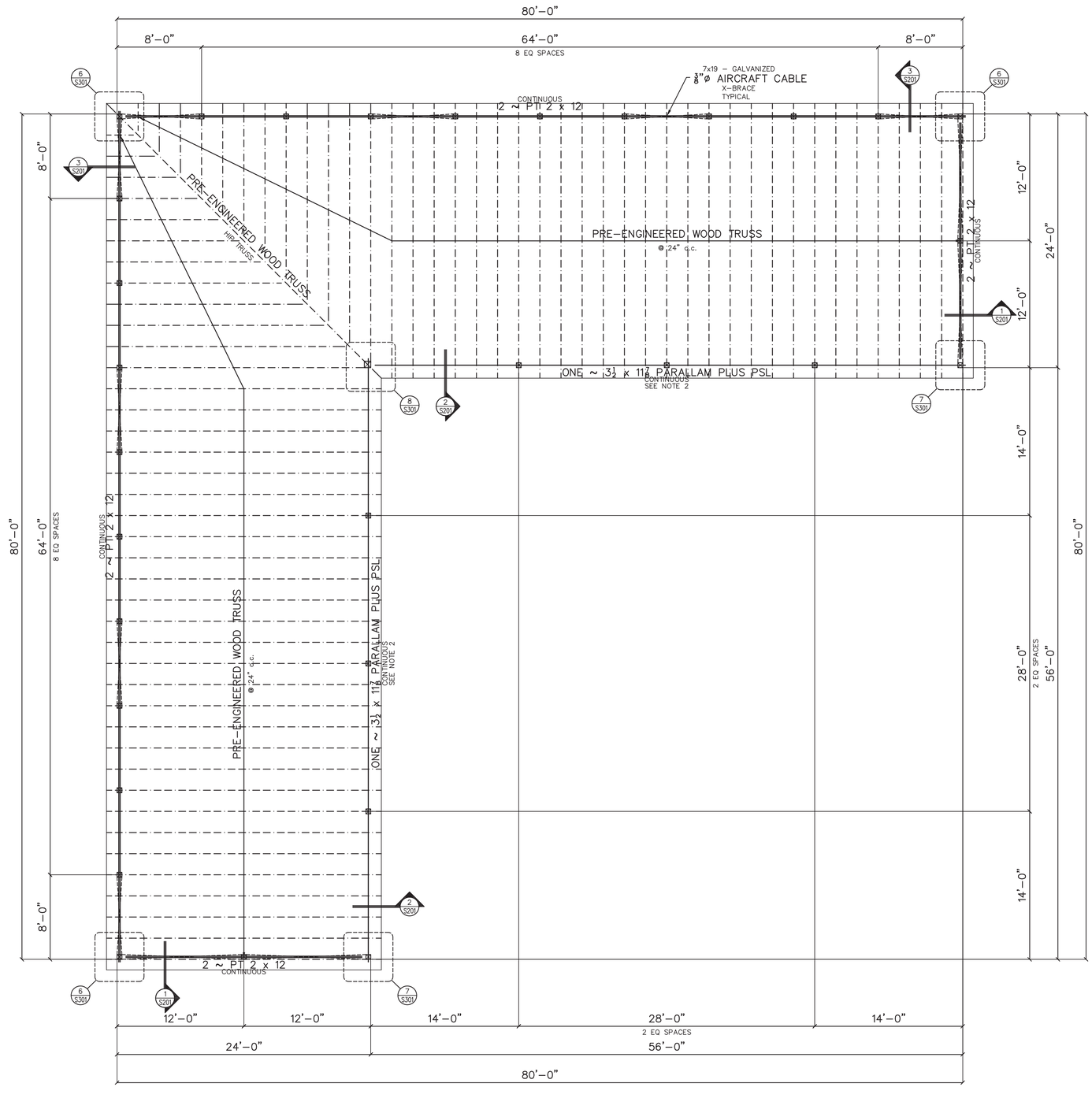

1 PLAN
1" = 1'-0
ROOF FRAMING PLAN

NOTES:
1.) TOP/BEAM ELEV (+12'-0).
2.) PARALLAM PLUS PSL IS PRODUCT OF TRUSJOIST WEYERHAEUSER. ANY ALTERNATES SHALL BE SUBMITTED TO EOR FOR APPROVAL.

X		
SXXX	NOT USED	SCALE:
X		
SXXX	NOT USED	SCALE:
X		
SXXX	NOT USED	SCALE:
1		
S102	PLAN	SCALE: 3/16" = 1'-0

NORTH CAROLINA PROFESSIONAL SEAL ENGINEER
PRELIMINARY

RED ENGINEERING & DESIGN
STRUCTURAL ENGINEERS
126 SALEM TOWNE CT
APEX, NORTH CAROLINA 27502
TEL: (919) 221-0045
REDENGINEERINGDESIGN.COM
C-3479

Client: HILLIARD ENGINEERING
PO BOX 249
SANFORD,NC

Project: NEW CONSTRUCTION OF
POLE BARN
11948 PAUL GREEN MEM. HWY, US-421
BROADWAY, NC 27505

FOUNDATION PLAN

Project #: 25-E009
Date: 08.30.25
Drawn/Design By: RED
DWG. Checked By: BM
Scale: VARIES

REVISIONS

No.	Date:	Remarks
1		
1		
1		
1		

Sheet Number
S102

X

SXXX NOT USED SCALE:

X

SXXX NOT USED SCALE:

X

SXXX NOT USED SCALE:

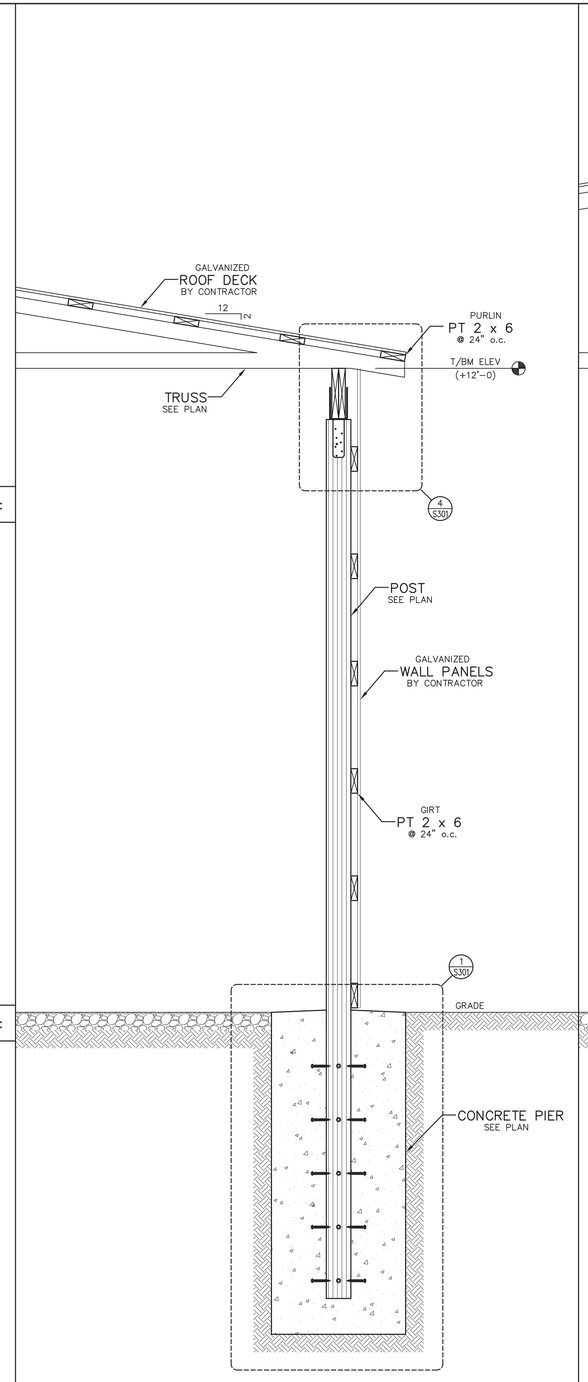

3

S201 SECTION SCALE: 3/4" = 1'-0

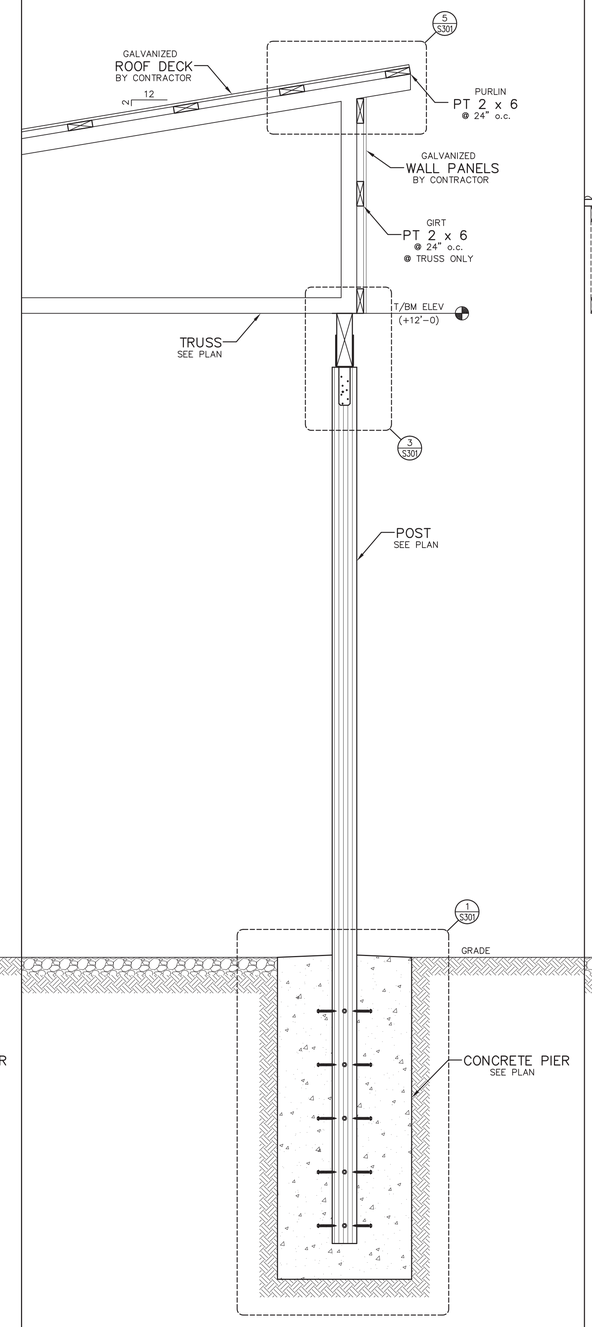

2

S201 SECTION SCALE: 3/4" = 1'-0

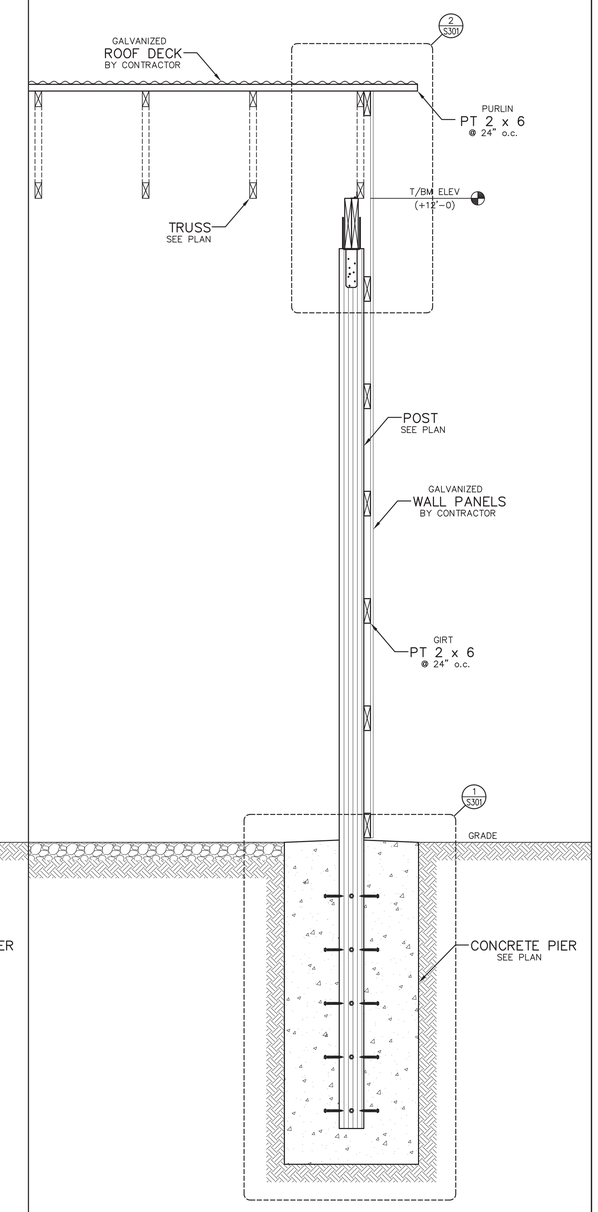

1

S201 SECTION SCALE: 3/4" = 1'-0

NORTH CAROLINA PROFESSIONAL SEAL ENGINEER
PRELIMINARY
..**

RED ENGINEERING & DESIGN
STRUCTURAL ENGINEERS
126 SALEM TOWNE CT
APEX, NORTH CAROLINA 27502
TEL: (919) 272-5045
RED@ENGINEERINGDESIGN.COM
C-3479

Client:
HILLIARD ENGINEERING
PO BOX 249
SANFORD,NC

Project:
NEW CONSTRUCTION OF
POLE BARN
11948 PAUL GREEN MEM. HWY, US-421
BROADWAY, NC 27505

SECTIONS

Project #:
25-E009

Date:
08.30.25

Drawn/Design By:
RED

DWG. Checked By:
BM

Scale:
VARIES

REVISIONS

No.	Date:	Remarks
1		
2		
3		
4		

Sheet Number

S201

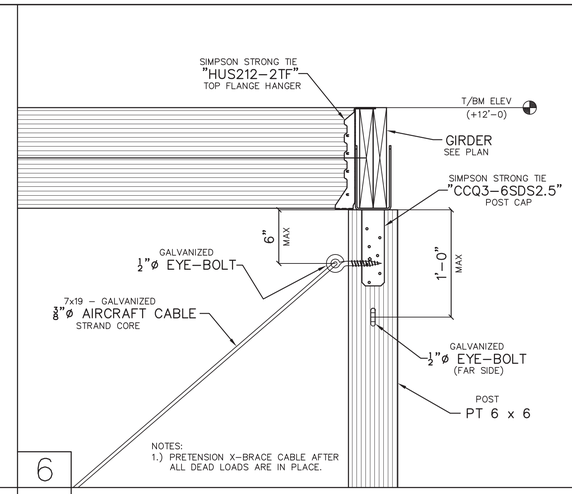

X | SXXX | NOT USED | SCALE:

6 | S301 | DETAIL | SCALE: 1½" = 1'-0

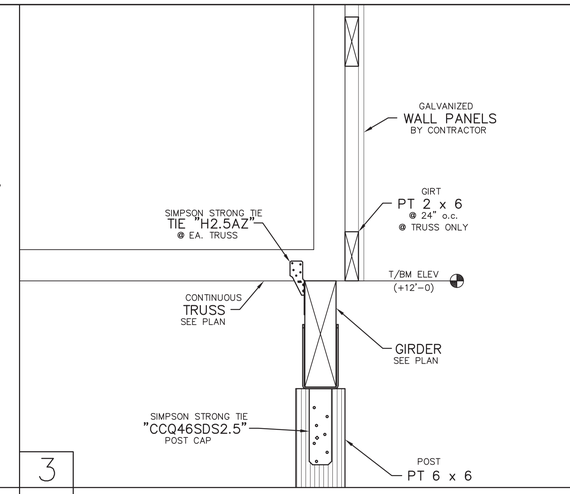

3 | S301 | DETAIL | SCALE: 1½" = 1'-0

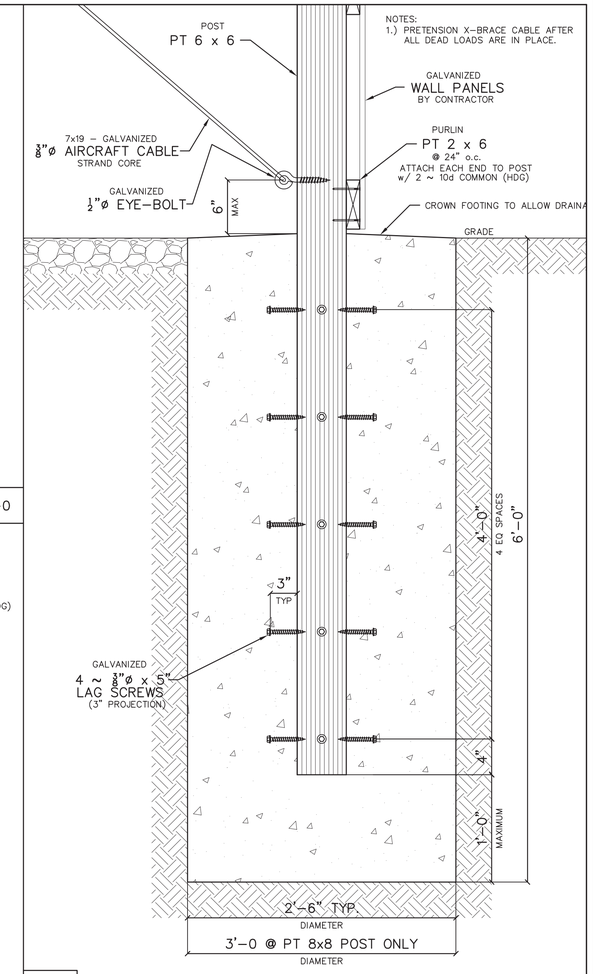

1 | S301 | DETAIL | SCALE: 1½" = 1'-0

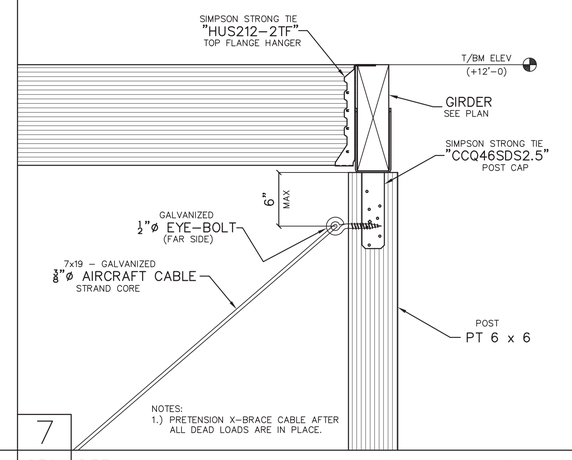

X | SXXX | NOT USED | SCALE:

7 | S301 | DETAIL | SCALE: 1½" = 1'-0

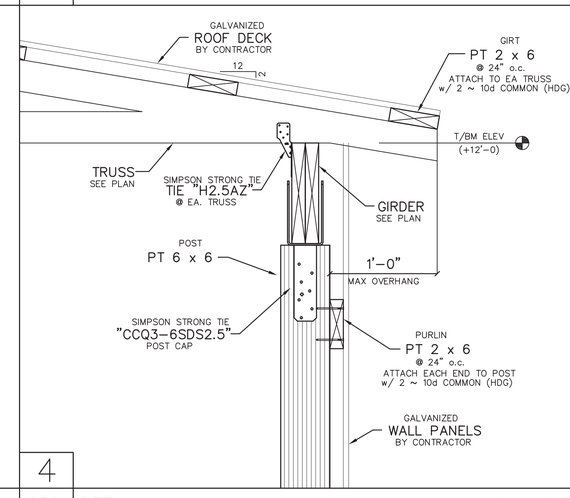

4 | S301 | DETAIL | SCALE: 1½" = 1'-0

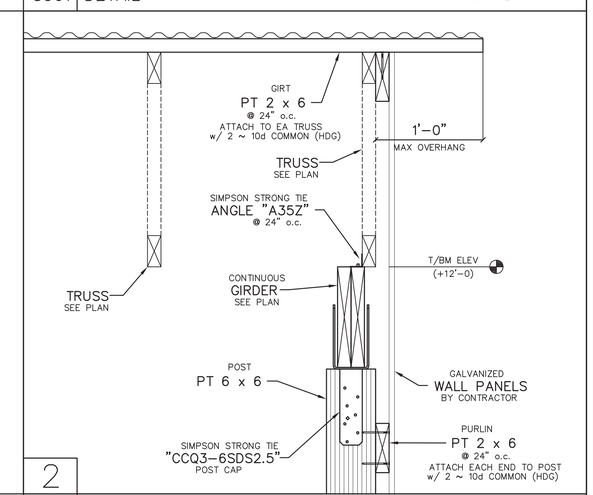

2 | S301 | DETAIL | SCALE: 1½" = 1'-0

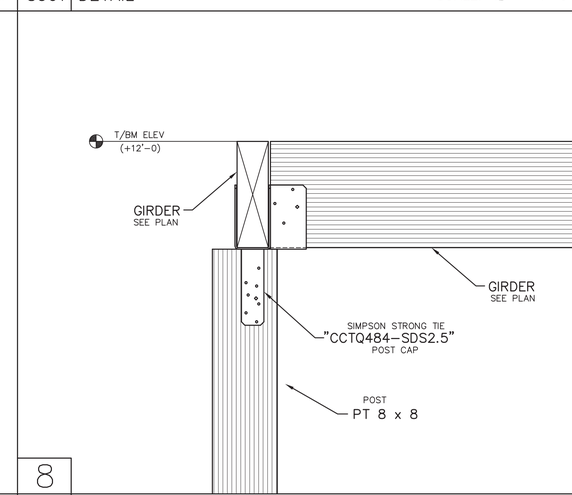

X | SXXX | NOT USED | SCALE:

8 | S301 | DETAIL | SCALE: 1½" = 1'-0

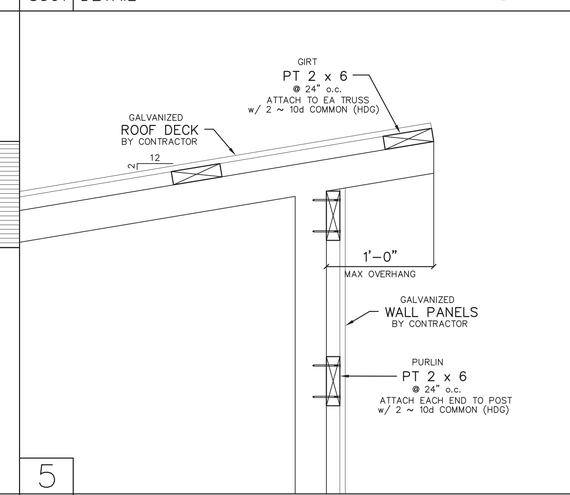

5 | S301 | DETAIL | SCALE: 1½" = 1'-0

PRELIMINARY
NORTH CAROLINA PROFESSIONAL SEAL ENGINEER

RED ENGINEERING & DESIGN
STRUCTURAL ENGINEERS
126 SALEM TOWNE CT
APEX, NORTH CAROLINA 27502
TEL: (919) 621-0048
REDENGINEERINGDESIGN.COM
C-3479

Client:
HILLIARD ENGINEERING
PO BOX 249
SANFORD,NC

Project:
NEW CONSTRUCTION OF
POLE BARN
11948 PAUL GREEN MEM. HWY, US-421
BROADWAY, NC 27505

DETAILS

Project #:	25-E009
Date:	08.30.25
Drawn/Design By:	RED
DWG. Checked By:	BM
Scale:	VARIES

REVISIONS

No.	Date:	Remarks
1		
2		
3		
4		

Sheet Number
S301

Harnett COUNTY NORTH CAROLINA

Emergency Services Department

www.harnett.org

Application for Plan Review

Application # _____-_____

Date Received: _____ Received By: _____

Name of Project: 11948 Pole Barn

Physical Address of Project: 11948 US-421

Broadway, NC 27505

Plans Submitted By: Hilliard Engineering

Project Phone: (919)-499-8501

Contact Person/Address: Jessica Faircloth

5322 Cool Springs Road

Broadway NC 27505

Contact Email: jfaircloth82@gmail.com

Contact Phone: (919)-499-8501 (_____)-_____-_____

Contractor's Name/Info: Clyde + Jessica Faircloth

5322 Cool Springs Road

Broadway NC 27505

Contractor's Phone: (919)-499-8501

- Plans that are submitted will be reviewed as quickly as possible with an average time of review between 7-10 working days.
- Status checks may be conducted on plan reviews by visiting the website http://hteweb.harnett.org/Click2GovBP/Index.jsp or by calling the Harnett County Central Permitting Office (910-893-7525, Option #2), or the Harnett County Fire Marshal's Office (910-893-7580).
- Approved plans must be picked up from the Central Permitting Office and all fees paid before any required inspections can be conducted.