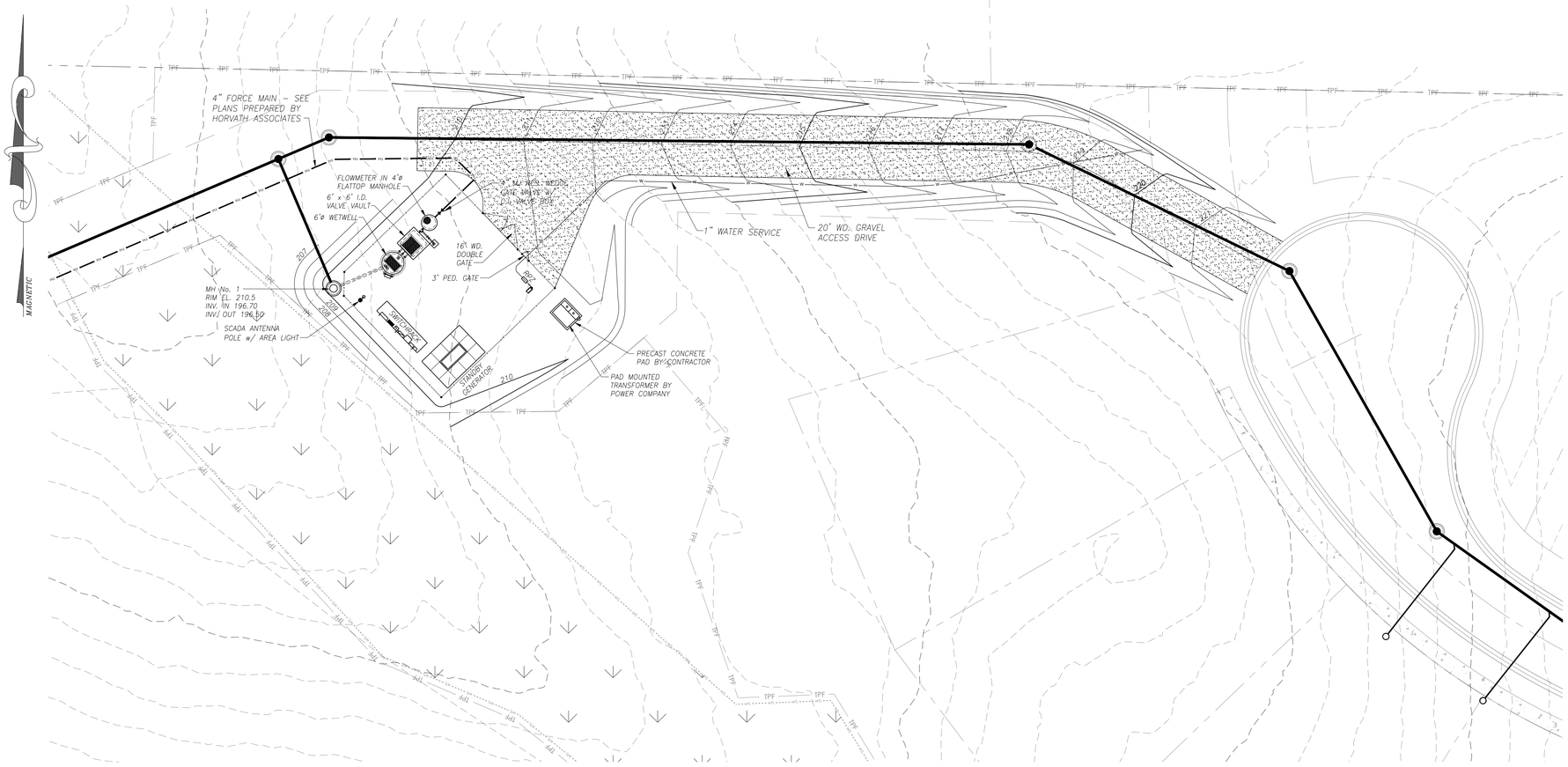

OVERALL SITE PLAN

SCALE: 1" = 20'

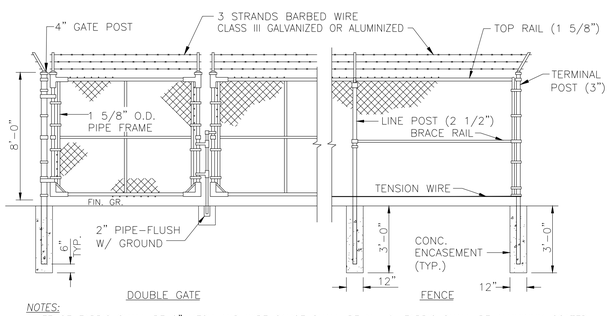

NOTES:

1. FENCE FABRIC SHALL BE 2" MESH AND WIRE GAUGE SHALL BE No. 9. FABRIC SHALL BE ALUMINUM COATED.
2. LINE POSTS SHALL BE 2½ INCH MINIMUM O.D., TOP RAILS SHALL BE 1⅝-INCH MINIMUM O.D., CORNER POSTS SHALL BE 3 INCH MINIMUM O.D., AND GATE POSTS SHALL BE 4 INCH MINIMUM O.D. ALL POSTS AND RAILS SHALL BE HOT DIPPED GALVANIZED.
3. CONTRACTOR SHALL INSTALL A SIGN ON THE EXTERIOR SIDE OF THE GATE WITH EMERGENCY CONTACT INFORMATION. SIGN SHALL BE 32"W x 16" HIGH, WITH RED LETTERS ON A WHITE BACKGROUND AS FOLLOWS:
   "SEWER LIFT STATION #(TO BE ASSIGNED)
   PROPERTY OF HARNETT REGIONAL WATER
   911 ADDRESS (TO BE ASSIGNED)
   IN CASE OF EMERGENCY CALL (910) 893-2424"
   PURCHASE SIGN FROM ADVANCED SIGNS OF ANGIER (919) 639-0794.

CHAIN LINK FENCE

NO SCALE

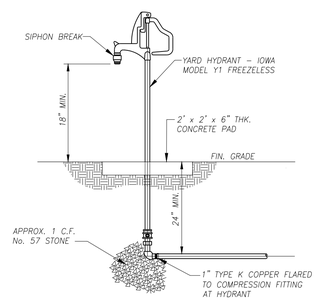

YARD HYDRANT DETAIL

NO SCALE

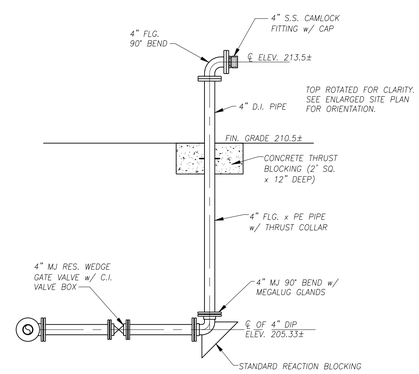

EMERGENCY BYPASS CONNECTION DETAIL

NO SCALE

ISSUED FOR CONSTRUCTION

NORTH CAROLINA PROFESSIONAL SEAL 10130 ENGINEER JOHN F. PHILLIPS 5/15/22

DESIGN JFP
DRAWN JLB
CHECKED JFP
SCALE AS SHOWN
FILE BRPS-SPR1

REVISIONS:

DIEHL & PHILLIPS, P.A.
CONSULTING ENGINEERS - LIC. NO. C-0465
1500 PINEY PLAINS RD., SUITE 200
CARY, N.C. 27518 • (919) 467-9972

D&P

BRICK MILL ESTATES
HARNETT COUNTY
COATS, NORTH CAROLINA

WASTEWATER PUMP STATION - OVERALL SITE PLAN AND MISCELLANEOUS SITE DETAILS

SHEET PS1 OF 5