Ministries Activity Center Addition
Mount Pisgah Harnett
Original Free Will]
Baptist Church

145 Prospect Church Road
Erwin, NC

NOTICE TO CONTRACTOR
All construction must comply with current NC Building Codes and is subject to field inspection and verification.

Reviewed for Code Compliance

03/10/2025

Harnett COUNTY NORTH CAROLINA

General Conditions:
* General Liability, Builder's Risk, and Workmen's Compensation Insurances are required: Floor Insurance not required:
* All Permit Fees are required:
* Temporary Utilities: Water, Sanitation, Power, and Telephone:
* Keep Job Site clean and final building cleaned up ready for Owner Occupancy:
* Construction Staking:
* Full Time Job Supervision:

Site Work:
* Clearing and Grubbing existing area where new construction will be going:
* Repair existing ground previously occupied by original Sanctuary to be demolished by Owner:
* Finish Floor Elevation to match existing finish floor:
* To include all required sedimentation and erosion control required by Harnett County:
* All sidewalks, stoops, etc. shown on Civil Site Plan (by others): Sidewalks, Stoops, etc. will be 4" thick, 3000 psi concrete at 28 days with one layer of 6x6x10/10 welded wire fabric:
* Soil Poisoning beneath Building pad per USDA spec's including one year warranty:
* Removal or Replacement of unsuitable soils, if encountered, will be done under the supervision of the Soils Testing Lab retained by the Owner: Contractor to provide a unit price for Architect to approve:

Concrete:
* All concrete shall be 3,000 psi @ 28 days compressive strength:
* Floor Slab to be 4" thick with one layer of 6x6x10/10 welded wire reinforcing on 6 mil vapor barrier:
* All necessary reinforcing for footings, control joints, cur-n-seal and perimeter foundation insulation:
* Concrete pads for new Condenser Units and Dumpster Pad as shown on Civil drawings and Mechanical drawings:

Masonry:
* Masonry and Mortar shall be a match to what is on the existing Sanctuary which remains:
* To include galvanized wall ties, PVC thru wall flashing, and all steel angle lintels above door and window openings, including the curved lintels over the large oval windows:
* To include 72" high brick screen wall around three sides of Dumpster pad:

Rough Carpentry:
* Pre-engineered Wood Roof Trusses at 24" o.c.with hurricane clips at each truss, including all bracing both temporary and permanent:
* Roof Decking to be one layer of 5/8" OSB Sheathing with hold down clips and covered with one layer of felt, weight of felt to be as approved for warranty by metal roof panel manufacturer:

Architectural Wood Work and Trim:
* To include the fabrication, supply and installation of all cabinetry and shelving: All exposed cabinet surfaces shall be covered with plastic laminate. All interior surfaces are to be covered with melamine. Includes plastic laminate covered countertops and backsplashes:

Thermal and Moisture Protection:
* Sound Batts are to be installed in all interior partitions:
* Roof Panels are to match what is on their present Sanctuary. Field verify:
* Aluminum covered fascia and frieze with vented vinyl soffit to match what is on existing Sanctuary: Field verify:
* Exterior walls to receive one layer of 1/2" OSB sheathing with one layer of 15 lb felt and R19 Batt Insulation with Kraft faced vapor barrier:
* R38 Insulation with Kraft faced Batt Insulation at roof trusses at Thermal Line established by Architect:

Page 2, Spec Issues, continued:

Doors and Windows:
* Hollow Metal Doors flush insulated painted with Hollow Metal Frames. See Plans for locations:
* Wood Doors: Solid Core, Stain Grade, Birch Veneer Doors with Hollow Metal Frames. See Plans for locations:
* Bronze Aluminum Doors and Frames: To match what is used on the existing Sanctuary. Field Verify:
* Finish Hardware: To match that which isused on the existing Sanctuary. Field Verify:

Finishes:
* All walls to receive 5/8" drywall ready for paint or wall covering: Special Drywall required at Fire Barrier: See Plans:
* Ceilings: See Plans for locations of Acoustical Tile versus Drywall. All ceilings to be in finished form: Acoustical ceilings to be 2'x2' white Class A grid with Omni fissured reveal edge tile. Provide for two ceiling access hatches:
* Floor Coverings: Provide an Allowance Twenty Six Thousand ($26,000.00) for Owner selected floor coverings including base:
* Wall Coverings: Provide an Allowance of Seven Thousand ($7,000.00) for Owner selected wall covering:
* Miscellaenous: Provide (4) Recessed 10 lb Fire Extinguishers with cabinets in locations as verified by Fire Marshal:
* Provide plastic laminate Corner Guards at all Corridor corners 6' high:
* Window blinds will be provided by Owner:

SYMBOLS & MATERIALS LEGEND

CONCRETE MASONRY UNIT (PLAN VIEW)
CONCRETE MASONRY UNIT (SECTION VIEW)
CONCRETE
BRICK
STEEL/METAL
WOOD
EXISTING WALL
GYPSUM BOARD
PLYWOOD
RIGID INSULATION
BATT INSULATION
FOAM INSULATION
EARTH
STONE/GRAVEL
STUCCO/SAND

WALL SECTION
A / A401 — WALL SECTION IDENTIFICATION; SHEET SECTION APPEARS ON.

INTERIOR ELEVATION
1 / 4 A601 N / 3 — ELEVATION IDENTIFICATION; SHEET ELEVATION APPEARS ON.

DETAIL
1 / A420 — DETAIL IDENTIFICATION; SHEET DETAIL APPEARS ON.

INTERIOR FINISHES
CLG / BASE / WALL / FLOOR — FINISH IDENTIFICATION
FINISH — INTERIOR FINISHES (SPECIAL)
W1 — INTERIOR PARTITION TAG

1 — KEYNOTE TAG
1 — REVISION TAG
D1 — DOOR TAG
W1 — WINDOW TAG
1HR — FIRE RATED PARTITION
SP — SMOKE PARTITION

GENERAL NOTES

1.1 ALL WORK SHALL CONFORM TO AT LEAST THE MINIMUM STANDARDS OF THE NORTH CAROLINA BUILDING CODE (NCBC), 2018 EDITION AND ALL APPLICABLE LOCAL ORDINANCES.

1.2 DESIGN LOADINGS WHERE APPLICABLE ARE INDICATED WITHIN THE STRUCTURAL DRAWINGS AND/OR BUILDING CODE SUMMARY.

1.3 TO THE BEST OF THE ARCHITECT'S KNOWLEDGE, THE ARCHITECTURAL DRAWINGS HAVE BEEN DESIGNED IN ACCORDANCE WITH THE CURRENT BUILDING CODE.

1.4 THE CONTRACTOR SHALL NOTIFY THE ARCHITECT OF ANY DISCREPANCIES PRIOR TO CONSTRUCTION. THE CONTRACTOR SHALL REVIEW AND DETERMINE THAT DIMENSIONS ARE COORDINATED BETWEEN ARCHITECTURAL, MECHANICAL, ELECTRICAL, PLUMBING AND STRUCTURAL DRAWINGS BEFORE FABRICATION OR CONSTRUCTION. THE ARCHITECT WILL MAKE AVAILABLE UPON REQUEST THE BASE FLOOR PLAN(S) & REFLECTED CEILING PLAN(S) IN AUTOCAD R2000 DWG FORMAT FOR SUB-CONTRACTOR USE IN PREPARATION OF SHOP DRAWINGS. FILES SHALL BE SENT ONLY UPON RECEIPT OF ARCHITECTS ELECTRONIC RELEASE FORM SIGNED BY INDIVIDUAL REQUESTING THE FILE(S) AND A $100 PER FILE TRANSFER FEE.

1.5 WHENEVER AMBIGUITY OR CONFLICT WITHIN THESE CONSTRUCTION DOCUMENTS MAY EXIST, THE MOST STRINGENT REQUIREMENT SHALL APPLY AS INTERPRETED BY THE ARCHITECT.

1.6 IF COMPLIANCE WITH TWO OR MORE STANDARDS IS SPECIFIED AND THE STANDARDS ESTABLISH DIFFERENT OR CONFLICTING REQUIREMENTS, THE MOST STRINGENT REQUIREMENT SHALL APPLY.

PROJECT TEAM

ARCHITECT:
R. WARD WEBB, ARCHITECT, P.A.
1659 W. HANRAHAN ROAD
AYDEN, NC. 28513
PHONE: (252) 531-2711
EMAIL: WGARRYOWEN@CS.COM

M/E/P ENGINEER CONSULTANT
KAIROS PROJECT GROUP, INC.
555 FAYETTEVILLE STREET
SUITE 201
RALEIGH, NC. 27601
PHONE: (919) 719-3475

STRUCTURAL ENGINEER:
NEVILLE ENGINEERING
110-B CULBRETH RD.
CHAPEL HILL, NC. 27516
PHONE: (919) 740-3427

CONTRACTOR:

INDEX OF DRAWINGS

VICINITY MAP

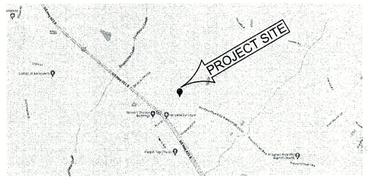

ARCHITECT

RON W. WEBB
1659 W. HANRAHAN ROAD
AYDEN, NC. 28513
TEL: (252) 531-2711

Ministries Activity Center Addition Mount Pisgah Harnett Original Free Will Baptist Church

145 Prospect Church Road
Erwin, NC.

PROJECT CONSULTANTS

KAIROS PROJECT GROUP, INC.
CONSULTING ENGINEERS
555 FAYETTEVILLE STREET | SUITE 201
RALEIGH, NC 27601 | 919-719-3475
WWW.KPGNC.COM | NC FIRM #: C-3824

STRUCTURAL

NEVILLE ENGINEERING
AUGUSTUS NEVILLE, PE
100-B CULBRETH RD.
CHAPEL HILL, NC 27516
TEL: (919) 740-3427

RON W. WEBB REGISTERED ARCHITECT 3114 9-16-2024 NORTH CAROLINA GREENVILLE, NC

☒ For Construction
☐ Not for Construction
☒ Review Set
☐ Bid Set

All drawings and copies thereof are instruments of service and as such remain the property of Ron W. Webb Architect They are to be used only with respect to this project. With the exception of one complete set for each party to the contract, all copies are to be returned or accounted for to Ron W. Webb Architect upon completion of the work. None or part of these drawings may be reproduced without the express written consent of Ron W. Webb Architect. These plans are copyrighted and are subject to copyright protection as an "Architectural Work" under Sec. 102 of the Copyright Act, 17 U.S.O. as amended December 1990 and known as Architectural Works Copyright Protection Act of 1990.
© COPYRIGHT 2020

Issue Date: 09/20/2023
Plot Date:
Revisions

Mark	Date	Description

TITLE SHEET

Drawing No.
T1
of

ROOM FINISH SCHEDULE

No.	NAME	FLOOR	BASE	WALLS	CEILING	HT.	REMARKS
001	ENTRY PORCH	EXPOSED CONC.	N/A	N/A	VENTED VINYL	11'-0"	BROOM FINISH CONC.
101	LOBBY	VCT	4" RUBBER	PAINTED GWB	2x2 AC. TILE	10'-0"	
102	MULTI PURPOSE	VCT	4" RUBBER	PAINTED GWB	2x2 AC. TILE	SLOPED	
103	SECURITY	CARPET	4" RUBBER	PAINTED GWB	2x2 AC. TILE	10'-0"	
104	MULTI MEDIA	CARPET	4" RUBBER	PAINTED GWB	2x2 AC. TILE	10'-0"	
105	STORAGE	VCT	4" RUBBER	PAINTED GWB	2x2 AC. TILE	10'-0"	
106	JAN. / STORAGE	VCT	4" RUBBER	PAINTED GWB	2x2 AC. TILE	10'-0"	
107	KITCHEN	VCT	4" RUBBER	PAINTED GWB	2x2 AC. TILE	10'-0"	FRP PANELS 6'-0" HIGH, EPOXY PAINT ABOVE
108	PANTRY	VCT	4" RUBBER	PAINTED GWB	2x2 AC. TILE	10'-0"	
109	ELECTRIC	EXPOSED CONC.	4" RUBBER	PAINTED GWB	PAINTED GWB	16'-0"	
110	FAMILY TOILET	VCT	4" RUBBER	PAINT & TILE	2x2 AC. TILE	10'-0"	TILE TO 5'-0" HIGH, EPOXY PAINT ABOVE
111	CLASSROOM	CARPET	4" RUBBER	PAINTED GWB	2x2 AC. TILE	10'-0"	
112	CLASSROOM	CARPET	4" RUBBER	PAINTED GWB	2x2 AC. TILE	10'-0"	
113	CLASSROOM	CARPET	4" RUBBER	PAINTED GWB	2x2 AC. TILE	10'-0"	
114	REAR LOBBY	VCT	4" RUBBER	PAINTED GWB	2x2 AC. TILE	10'-0"	
115	REAR CORRIDOR	VCT	4" RUBBER	PAINTED GWB	2x2 AC. TILE	10'-0"	
116	WOMEN	CERAMIC TILE	CERAMIC TILE	PAINT & TILE	2x2 AC. TILE	10'-0"	TILE TO 5'-0" HIGH, EPOXY PAINT ABOVE
117	MEN	CERAMIC TILE	CERAMIC TILE	PAINT & TILE	2x2 AC. TILE	10'-0"	TILE TO 5'-0" HIGH, EPOXY PAINT ABOVE
118	CLASSROOM	CARPET	4" RUBBER	PAINTED GWB	2x2 AC. TILE	10'-0"	
119	CLASSROOM	CARPET	4" RUBBER	PAINTED GWB	2x2 AC. TILE	10'-0"	
120	MAIN CORRIDOR	VCT	4" RUBBER	PAINTED GWB	2x2 AC. TILE	10'-0"	

A

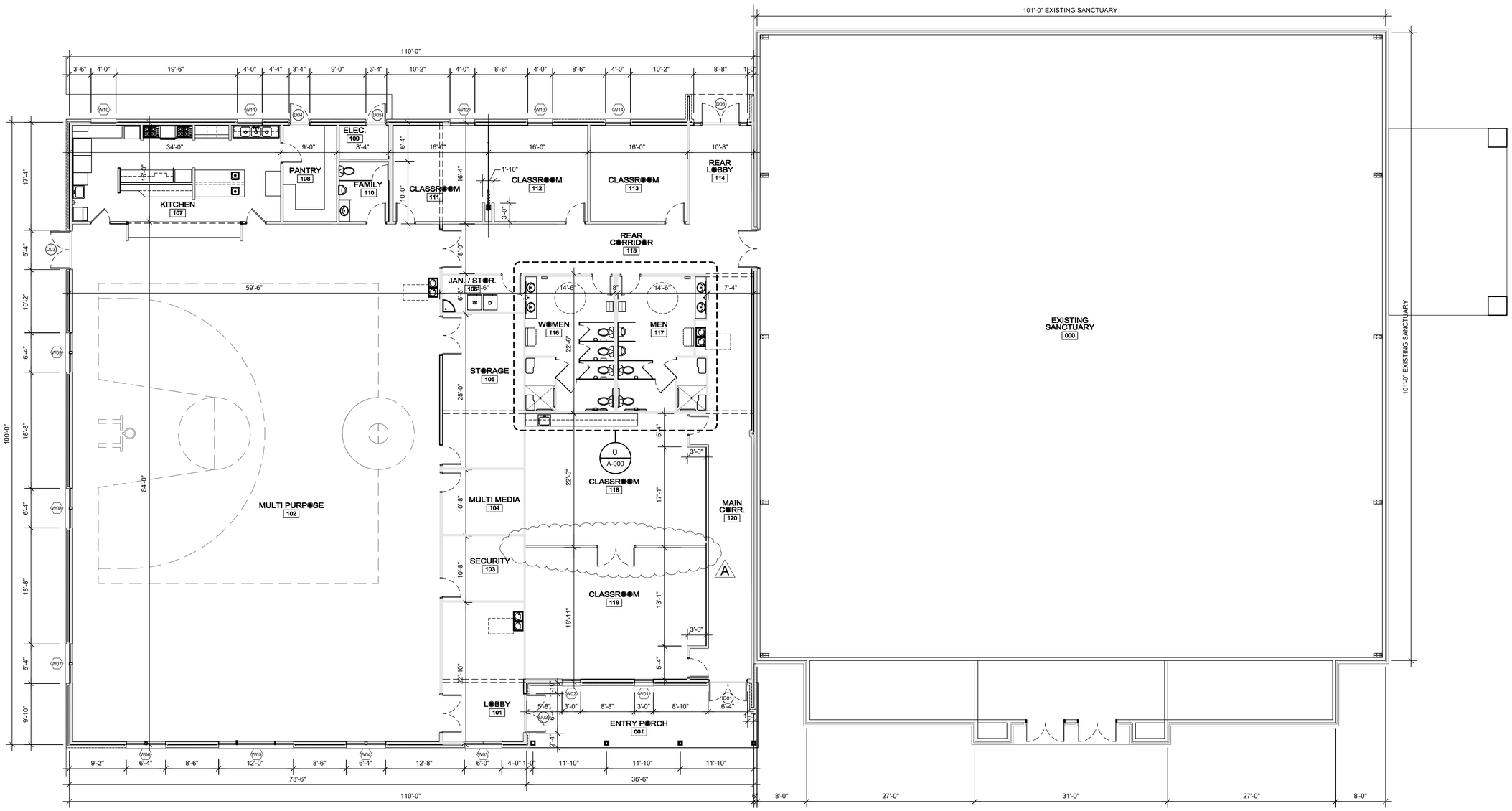

OVERALL FLOOR PLAN

SCALE; 1/8" = 1'-0"

PRELIMINARY
NOT FOR CONSTRUCTION
09/08/2023

ARCHITECT

RON W. WEBB
1659 W. HANRAHAN ROAD
AYDEN, NC. 28513
TEL: (252) 531-2711

Ministries Activity Center Addition Mount Pisgah Harnett Original Free Will Baptist Church

145 Prospect Church Road
Erwin, NC.

PROJECT CONSULTANTS

KAIROS PROJECT GROUP INC.
CONSULTING ENGINEERS 555
FAYETTEVILLE STREET | SUITE 201
RALEIGH, NC 27601 | 919-719-3475
WWW.KPGNC.COM | NC FIRM #: C-3824

STRUCTURAL

NEVILLE ENGINEERING
AUGUSTUS NEVILLE, PE
100-B CULBRETH RD.
CHAPEL HILL, NC 27516
TEL: (919) 740-3427

RON W. WEBB
REGISTERED ARCHITECT
3114
9-16-2024
NORTH CAROLINA
GREENVILLE, NC

☒ For Construction
■ Not for Construction
☒ Review Set
☐ Bid Set

All drawings and copies thereof are instruments of service and as such remain the property of Ron W. Webb Architect They are to be used only with respect to this project. With the exception of one complete set for each party to the contract, all copies are to be returned or accounted for to Ron W. Webb Architect upon completion of the work. None or part of these drawings may be reproduced without the express written consent of Ron W. Webb Architect. These plans are copyrighted and are subject to copyright protection as an "Architectural Work" under Sec. 102 of the Copyright Act, 17 U.S.O. as amended December 1990 and known as Architectural Works Copyright Protection Act of 1990
© COPYRIGHT 2020

Issue Date09/20/2023
Plot Date:
Revisions

Mark	Date	Description
A	10-28-24	Lowered height of wall tile from 7'-0" to 5'-0" in schedule. Removed folding partition and added a wall and double door. Door type to be determined

Drawing No.

OVERALL FLOOR PLAN

A1

of

ROOM FINISH SCHEDULE

No.	NAME	FLOOR	BASE	WALLS	CEILING	HT.	REMARKS
001	ENTRY PORCH	EXPOSED CONC.	N/A	N/A	VENTED VINYL	11'-0"	BROOM FINISH CONC.
101	LOBBY	VCT	4" RUBBER	PAINTED GWB	2x2 AC. TILE	10'-0"	
102	MULTI PURPOSE	VCT	4" RUBBER	PAINTED GWB	2x2 AC. TILE	SLOPED	
103	SECURITY	CARPET	4" RUBBER	PAINTED GWB	2x2 AC. TILE	10'-0"	
104	MULTI MEDIA	CARPET	4" RUBBER	PAINTED GWB	2x2 AC. TILE	10'-0"	
105	STORAGE	VCT	4" RUBBER	PAINTED GWB	2x2 AC. TILE	10'-0"	
106	JAN. / STORAGE	VCT	4" RUBBER	PAINTED GWB	2x2 AC. TILE	10'-0"	
107	KITCHEN	VCT	4" RUBBER	PAINTED GWB	2x2 AC. TILE	10'-0"	FRP PANELS 6'-0" HIGH, EPOXY PAINT ABOVE
108	PANTRY	VCT	4" RUBBER	PAINTED GWB	2x2 AC. TILE	10'-0"	
109	ELECTRIC	EXPOSED CONC.	4" RUBBER	PAINTED GWB	PAINTED GWB	16'-0"	
110	FAMILY TOILET	VCT	4" RUBBER	PAINT & TILE	2x2 AC. TILE	10'-0"	TILE TO 7'-0" HIGH, EPOXY PAINT ABOVE
111	CLASSROOM	CARPET	4" RUBBER	PAINTED GWB	2x2 AC. TILE	10'-0"	
112	CLASSROOM	CARPET	4" RUBBER	PAINTED GWB	2x2 AC. TILE	10'-0"	
113	CLASSROOM	CARPET	4" RUBBER	PAINTED GWB	2x2 AC. TILE	10'-0"	
114	REAR LOBBY	VCT	4" RUBBER	PAINTED GWB	2x2 AC. TILE	10'-0"	
115	REAR CORRIDOR	VCT	4" RUBBER	PAINTED GWB	2x2 AC. TILE	10'-0"	
116	WOMEN	CERAMIC TILE	CERAMIC TILE	PAINT & TILE	2x2 AC. TILE	10'-0"	TILE TO 7'-0" HIGH, EPOXY PAINT ABOVE
117	MEN	CERAMIC TILE	CERAMIC TILE	PAINT & TILE	2x2 AC. TILE	10'-0"	TILE TO 7'-0" HIGH, EPOXY PAINT ABOVE
118	CLASSROOM	CARPET	4" RUBBER	PAINTED GWB	2x2 AC. TILE	10'-0"	
119	CLASSROOM	CARPET	4" RUBBER	PAINTED GWB	2x2 AC. TILE	10'-0"	
120	MAIN CORRIDOR	VCT	4" RUBBER	PAINTED GWB	2x2 AC. TILE	10'-0"	

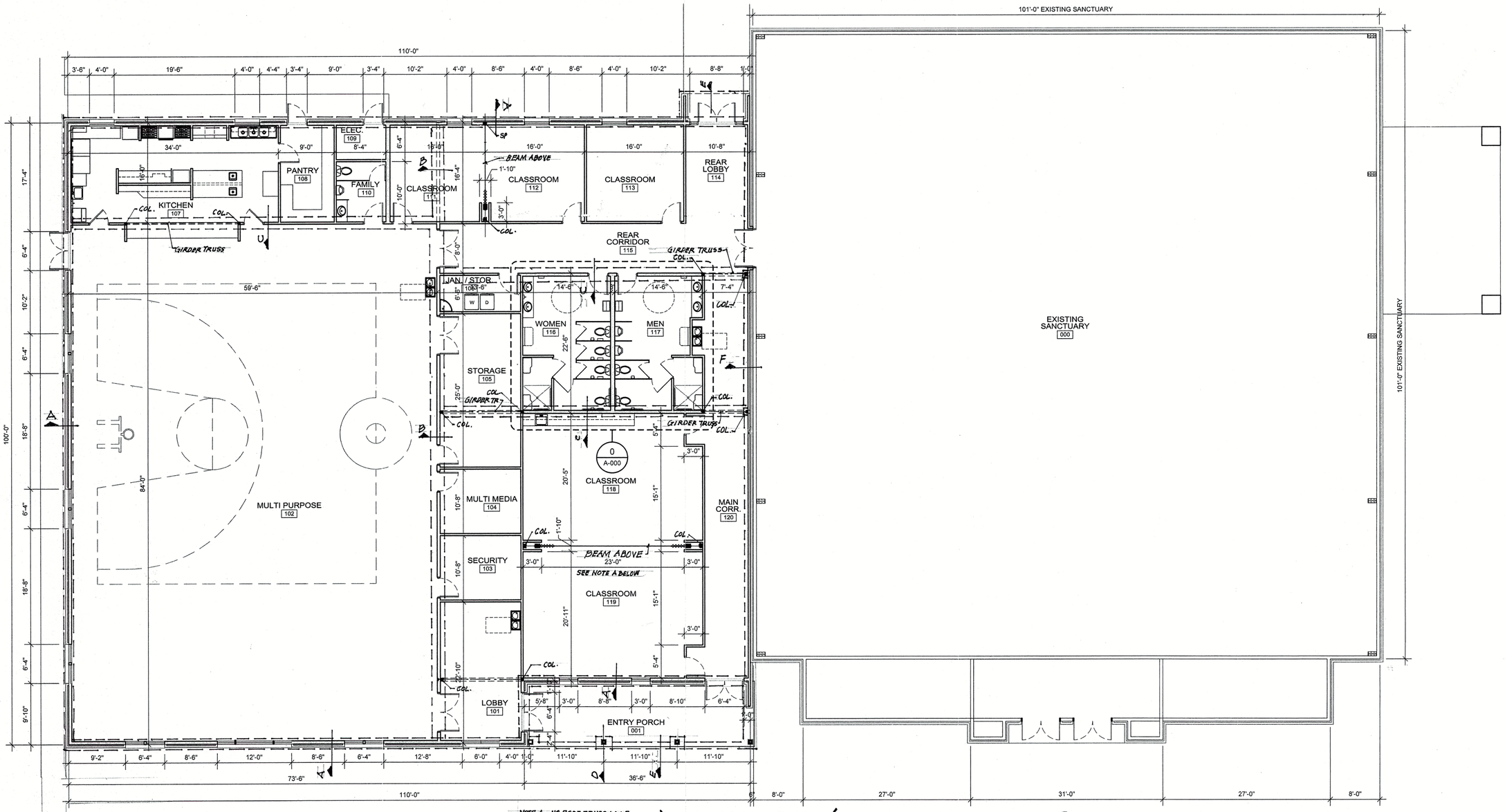

NOTE A: NO ROOF TRUSS LOAD ALLOWED ON FOLDING PARTITION BEAM.

NOTE B: WHERE COL'S ARE WIDER THAN STUD WALL, FLARE OUT FRAMING AND DRYWALL TO ENCAPSULATE.

'FOOTING PLAN'
OVERALL FLOOR PLAN

SCALE; 1/8" = 1'-0"

ARCHITECT

RON W. WEBB
1659 W. HANRAHAN ROAD
AYDEN, NC. 28513
TEL: (252) 531-2711

Ministries Activity Center Addition Mount Pisgah Harnett Original Free Will Baptist Church

145 Prospect Church Road
Erwin, NC.

PROJECT CONSULTANTS

KAIROS PROJECT GROUP, INC.
CONSULTING ENGINEERS
555 FAYETTEVILLE STREET | SUITE 201
RALEIGH, NC 27601 | 919-719-3475
WWW.KPGNC.COM | NC FIRM #: C-3824

STRUCTURAL
NEVILLE ENGINEERING
AUGUSTUS NEVILLE, PE
100-B CULBRETH RD.
CHAPEL HILL, NC 27516
TEL: (919) 740-3427

RON W. WEBB REGISTERED ARCHITECT 3114 SOUTH CAROLINA GREENVILLE, NC 9-16-2024

☒ For Construction
☐ Not for Construction
☒ Review Set
☐ Bid Set

All drawings and copies thereof are instruments of service and as such remain the property of Ron W. Webb Architect They are to be used only with respect to this project. With the exception of one complete set for each party to the contract, all copies are to be returned or accounted for to Ron W. Webb Architect upon completion of the work. None or part of these drawings may be reproduced without the express written consent of Ron W. Webb Architect. These plans are copyrighted and are subject to copyright protection as an "Architectural Work" under Sec. 102 of the Copyright Act, 17 U.S.O. as amended December 1990 and known as Architectural Works Copyright Protection Act of 1990
© COPYRIGHT 2020

Issue Date: 09/20/2023
Plot Date:
Revisions

Mark	Date	Description

Drawing No.
'FOOTING PLAN'
OVERALL FLOOR PLAN **A-2**
of

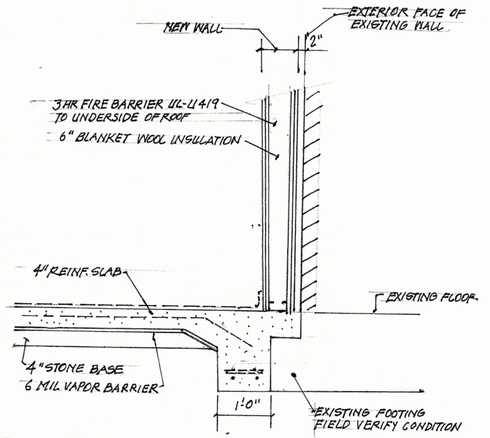

FIRE BARRIER AT NEW CORRIDOR: FOOTING 'F'
SCALE: 3/4" = 1'-0"

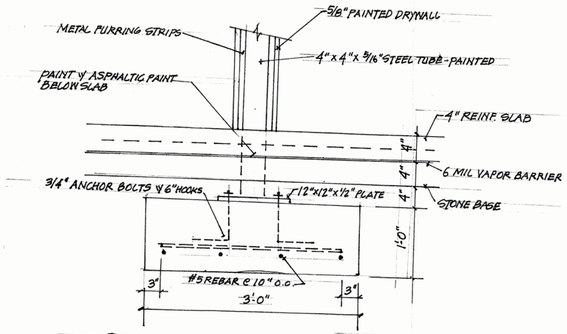

TYPICAL COLUMN DETAIL
SCALE: 1" = 1'-0"

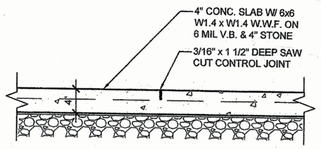

NOT TO EXCEED 20'-0" EACH WAY

CONTROL JOINT

Scale: 1" = 1'-0"

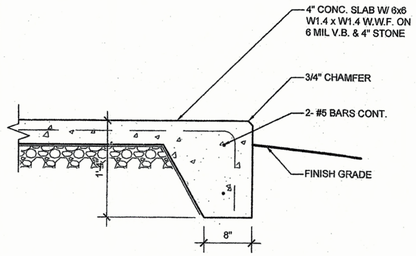

FOOTING 'E'

SLAB EDGE DETAIL

Scale: 1" = 1'-0"

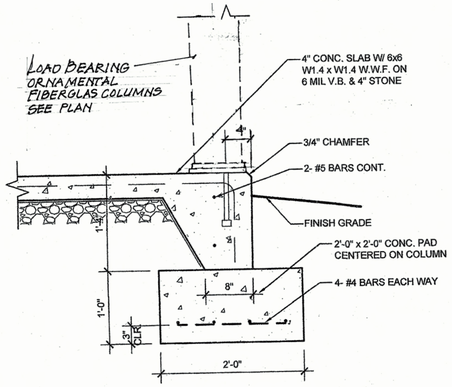

FOOTING 'D'

FOOTING DETAIL

Scale: 1" = 1'-0"

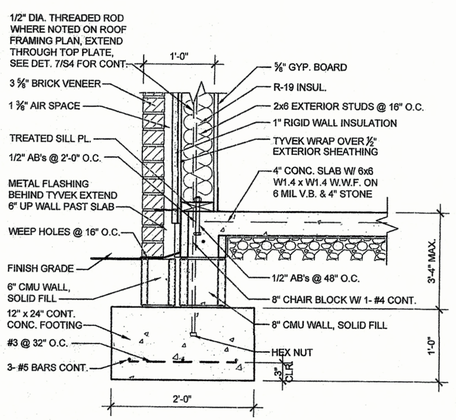

FOOTING 'A'

TYP. FOOTING DETAIL

Scale: 1" = 1'-0"

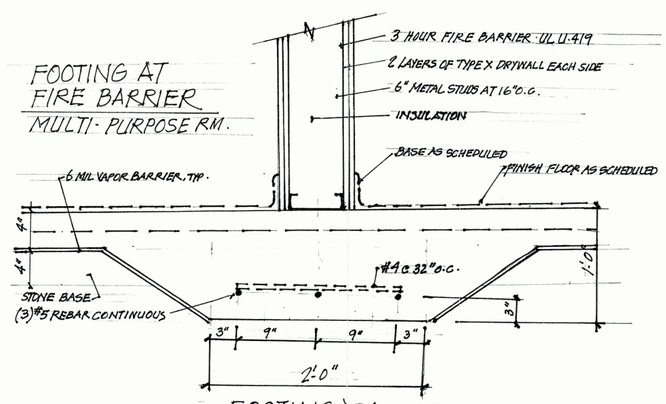

FOOTING 'B'

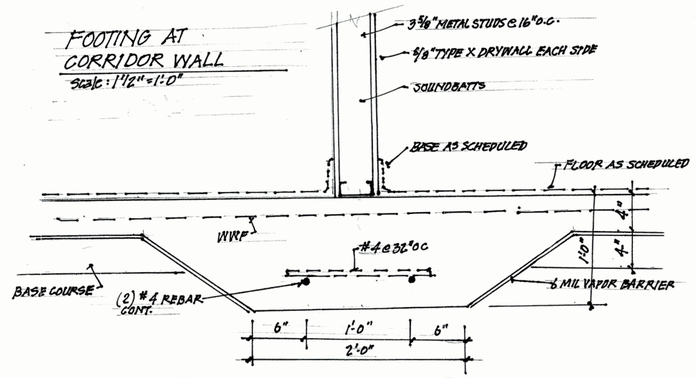

FOOTING 'C'

ARCHITECT

RON W. WEBB
1659 W. HANRAHAN ROAD
AYDEN, NC. 28513
TEL: (252) 531-2711

Ministries Activity Center Addition Mount Pisgah Harnett Original Free Will Baptist Church

145 Prospect Church Road
Erwin, NC.

Project Consultants

KAIROS PROJECT GROUP INC.
CONSULTING ENGINEERS 555 FAYETTEVILLE STREET | SUITE 201 RALEIGH, NC 27601 | 919-719-3475 WWW.KPGNC.COM | NC FIRM #: C-3824

STRUCTURAL
NEVILLE ENGINEERING
AUGUSTUS NEVILLE, PE
100-B CULBRETH RD.
CHAPEL HILL, NC 27516
TEL: (919) 740-3427

RON W. WEBB REGISTERED ARCHITECT 3114 9-16-2024 NORTH CAROLINA GREENVILLE, NC

~~FOR~~
☒ For Construction
■ Not for Construction
☒ Review Set
☐ Bid Set

All drawings and copies thereof are instruments of service and as such remain the property of Ron W. Webb Architect They are to be used only with respect to this project. With the exception of one complete set for each party to the contract, all copies are to be returned or accounted for to Ron W. Webb Architect upon completion of the work. None or part of these drawings may be reproduced without the express written consent of Ron W. Webb Architect. These plans are copyrighted and are subject to copyright protection as an "Architectural Work" under Sec. 102 of the Copyright Act, 17 U.S.O. as amended December 1990 and known as Architectural Works

Issue Date 09/20/2023
Plot Date:
Revisions

Mark	Date	Description

Drawing No.

SHEET NAME
FOUNDATION DETAILS

A-3

of

ROOM FINISH SCHEDULE

No.	NAME	FLOOR	BASE	WALLS	CEILING	HT.	REMARKS
001	ENTRY PORCH	EXPOSED CONC.	N/A	N/A	VENTED VINYL	11'-0"	BROOM FINISH CONC.
101	LOBBY	VCT	4" RUBBER	PAINTED GWB	2x2 AC. TILE	10'-0"	
102	MULTI PURPOSE	VCT	4" RUBBER	PAINTED GWB	2x2 AC. TILE	SLOPED	
103	SECURITY	CARPET	4" RUBBER	PAINTED GWB	2x2 AC. TILE	10'-0"	
104	MULTI MEDIA	CARPET	4" RUBBER	PAINTED GWB	2x2 AC. TILE	10'-0"	
105	STORAGE	VCT	4" RUBBER	PAINTED GWB	2x2 AC. TILE	10'-0"	
106	JAN. / STORAGE	VCT	4" RUBBER	PAINTED GWB	2x2 AC. TILE	10'-0"	
107	KITCHEN	VCT	4" RUBBER	PAINTED GWB	2x2 AC. TILE	10'-0"	FRP PANELS 6'-0" HIGH, EPOXY PAINT ABOVE
108	PANTRY	VCT	4" RUBBER	PAINTED GWB	2x2 AC. TILE	10'-0"	
109	ELECTRIC	EXPOSED CONC.	4" RUBBER	PAINTED GWB	PAINTED GWB	16'-0"	
110	FAMILY TOILET	VCT	4" RUBBER	PAINT & TILE	2x2 AC. TILE	10'-0"	TILE TO 7'-0" HIGH, EPOXY PAINT ABOVE
111	CLASSROOM	CARPET	4" RUBBER	PAINTED GWB	2x2 AC. TILE	10'-0"	
112	CLASSROOM	CARPET	4" RUBBER	PAINTED GWB	2x2 AC. TILE	10'-0"	
113	CLASSROOM	CARPET	4" RUBBER	PAINTED GWB	2x2 AC. TILE	10'-0"	
114	REAR LOBBY	VCT	4" RUBBER	PAINTED GWB	2x2 AC. TILE	10'-0"	
115	REAR CORRIDOR	VCT	4" RUBBER	PAINTED GWB	2x2 AC. TILE	10'-0"	
116	WOMEN	CERAMIC TILE	CERAMIC TILE	PAINT & TILE	2x2 AC. TILE	10'-0"	TILE TO 7'-0" HIGH, EPOXY PAINT ABOVE
117	MEN	CERAMIC TILE	CERAMIC TILE	PAINT & TILE	2x2 AC. TILE	10'-0"	TILE TO 7'-0" HIGH, EPOXY PAINT ABOVE
118	CLASSROOM	CARPET	4" RUBBER	PAINTED GWB	2x2 AC. TILE	10'-0"	
119	CLASSROOM	CARPET	4" RUBBER	PAINTED GWB	2x2 AC. TILE	10'-0"	
120	MAIN CORRIDOR	VCT	4" RUBBER	PAINTED GWB	2x2 AC. TILE	10'-0"	

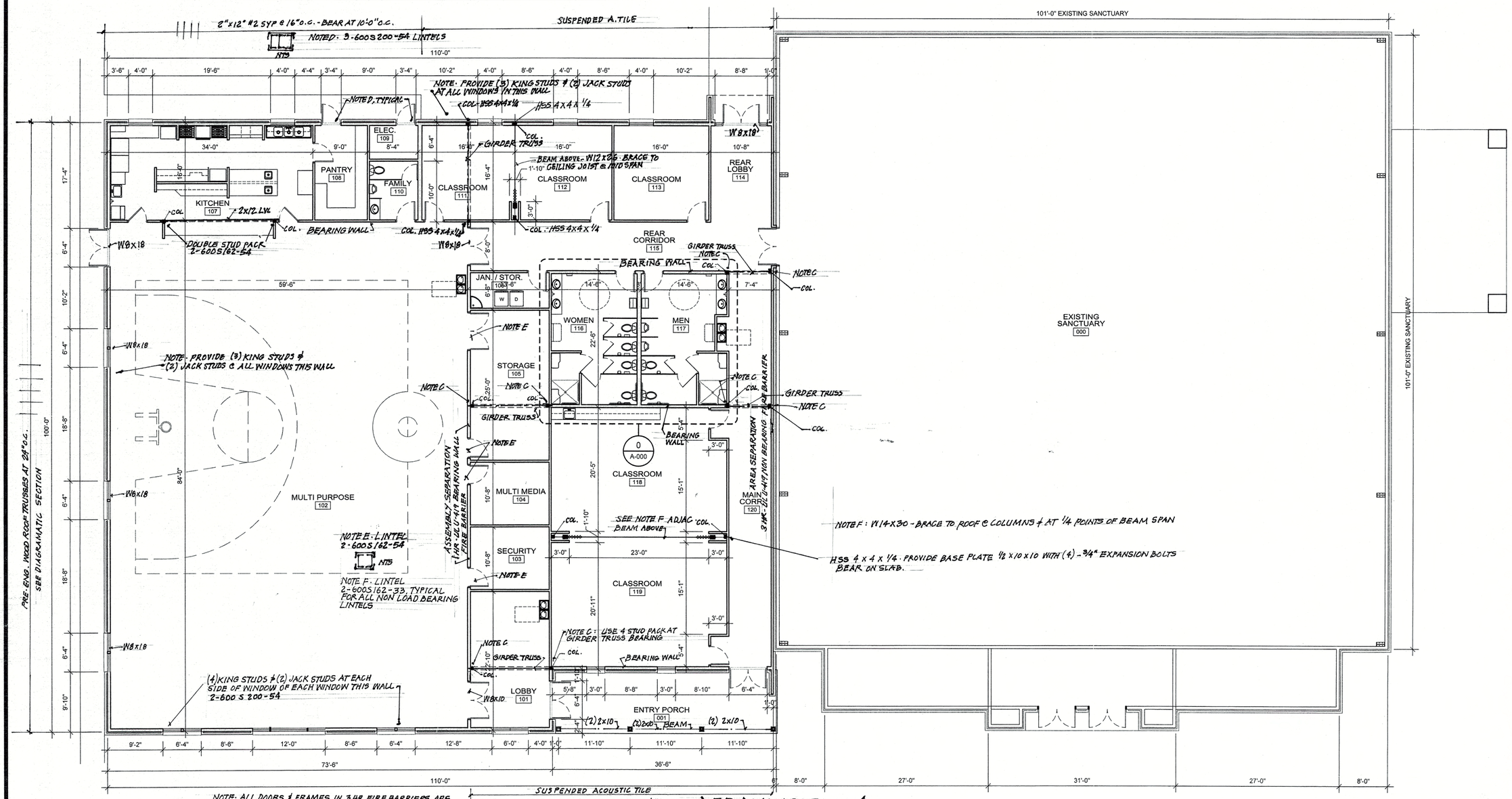

NOTE: ALL DOORS & FRAMES IN 3 HR FIRE BARRIERS ARE TO BE 3 HR RATED.

DRAFTSTOPPING PARTITIONS TO BE INSTALLED IN ATTIC IN COMPARTMENTS NOT TO EXCEED 3,000 SF. PROVIDE 30"x30" SQ. HATCH IN EACH PARTITION. HATCHES TO BE SELF CLOSING, BUT NO LATCHES.

NOTE: CORRIDORS ARE 1 HR RATED. ALL DOORS & FRAMES IN 1 HR RATED WALLS ARE 20 MINUTE RATED.

'FRAMING PLAN'
OVERALL FLOOR PLAN

SCALE; 1/8" = 1'-0"

ARCHITECT

RON W. WEBB
1659 W. HANRAHAN ROAD
AYDEN, NC. 28513
TEL: (252) 531-2711

Ministries Activity Center Addition Mount Pisgah Harnett Original Free Will Baptist Church

145 Prospect Church Road
Erwin, NC.

PROJECT CONSULTANTS

KAIROS PROJECT GROUP, INC.
CONSULTING ENGINEERS
555 FAYETTEVILLE STREET | SUITE 201
RALEIGH, NC 27601 | 919-719-3475
WWW.KPGNC.COM | NC FIRM #: C-3824

STRUCTURAL
NEVILLE ENGINEERING
AUGUSTUS NEVILLE, PE
100-B CULBRETH RD.
CHAPEL HILL, NC 27516
TEL: (919) 740-3427

RON W. WEBB REGISTERED ARCHITECT 3114 NORTH CAROLINA 1-16-2024 GREENVILLE, NC

- ☐ For Construction
- ☐ Not for Construction
- ☒ Review Set
- ☐ Bid Set

All drawings and copies thereof are instruments of service and as such remain the property of Ron W. Webb Architect They are to be used only with respect to this project. With the exception of one complete set for each party to the contract, all copies are to be returned or accounted for to Ron W. Webb Architect upon completion of the work. None or part of these drawings may be reproduced without the express written consent of Ron W. Webb Architect. These plans are copyrighted and are subject to copyright protection as an "Architectural Work" under Sec. 102 of the Copyright Act, 17 U.S.O. as amended December 1990 and known as Architectural Works Copyright Protection Act of 1990
© COPYRIGHT 2020

Issue Date: 09/20/2023
Plot Date:
Revisions

Mark	Date	Description

Drawing No.
• FRAMING PLAN •
OVERALL FLOOR PLAN
A-4
of

ROOM FINISH SCHEDULE

No.	NAME	FLOOR	BASE	WALLS	CEILING	HT.	REMARKS
001	ENTRY PORCH	EXPOSED CONC.	N/A	N/A	VENTED VINYL	11'-0"	BROOM FINISH CONC.
101	LOBBY	VCT	4" RUBBER	PAINTED GWB	2x2 AC. TILE	10'-0"	
102	MULTI PURPOSE	VCT	4" RUBBER	PAINTED GWB	2x2 AC. TILE	SLOPED	
103	SECURITY	CARPET	4" RUBBER	PAINTED GWB	2x2 AC. TILE	10'-0"	
104	MULTI MEDIA	CARPET	4" RUBBER	PAINTED GWB	2x2 AC. TILE	10'-0"	
105	STORAGE	VCT	4" RUBBER	PAINTED GWB	2x2 AC. TILE	10'-0"	
106	JAN. / STORAGE	VCT	4" RUBBER	PAINTED GWB	2x2 AC. TILE	10'-0"	
107	KITCHEN	VCT	4" RUBBER	PAINTED GWB	2x2 AC. TILE	10'-0"	FRP PANELS 6'-0" HIGH, EPOXY PAINT ABOVE
108	PANTRY	VCT	4" RUBBER	PAINTED GWB	2x2 AC. TILE	10'-0"	
109	ELECTRIC	EXPOSED CONC.	4" RUBBER	PAINTED GWB	PAINTED GWB	16'-0"	
110	FAMILY TOILET	VCT	4" RUBBER	PAINT & TILE	2x2 AC. TILE	10'-0"	TILE TO 7'-0" HIGH, EPOXY PAINT ABOVE
111	CLASSROOM	CARPET	4" RUBBER	PAINTED GWB	2x2 AC. TILE	10'-0"	
112	CLASSROOM	CARPET	4" RUBBER	PAINTED GWB	2x2 AC. TILE	10'-0"	
113	CLASSROOM	CARPET	4" RUBBER	PAINTED GWB	2x2 AC. TILE	10'-0"	
114	REAR LOBBY	VCT	4" RUBBER	PAINTED GWB	2x2 AC. TILE	10'-0"	
115	REAR CORRIDOR	VCT	4" RUBBER	PAINTED GWB	2x2 AC. TILE	10'-0"	
116	WOMEN	CERAMIC TILE	CERAMIC TILE	PAINT & TILE	2x2 AC. TILE	10'-0"	TILE TO 7'-0" HIGH, EPOXY PAINT ABOVE
117	MEN	CERAMIC TILE	CERAMIC TILE	PAINT & TILE	2x2 AC. TILE	10'-0"	TILE TO 7'-0" HIGH, EPOXY PAINT ABOVE
118	CLASSROOM	CARPET	4" RUBBER	PAINTED GWB	2x2 AC. TILE	10'-0"	
119	CLASSROOM	CARPET	4" RUBBER	PAINTED GWB	2x2 AC. TILE	10'-0"	
120	MAIN CORRIDOR	VCT	4" RUBBER	PAINTED GWB	2x2 AC. TILE	10'-0"	

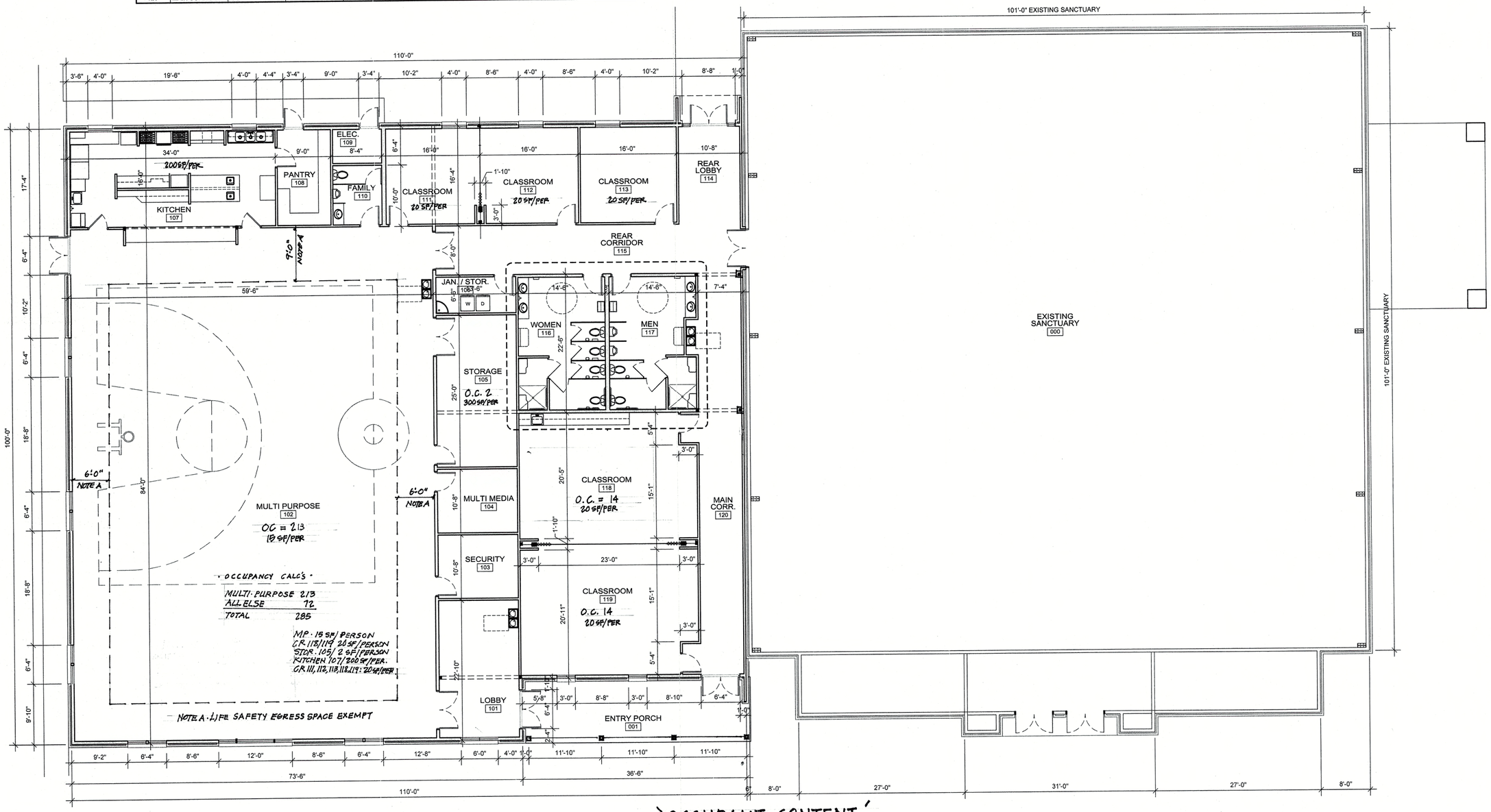

`OCCUPANT CONTENT'
OVERALL FLOOR PLAN

SCALE; 1/8" = 1'-0"

ARCHITECT

RON W. WEBB
1659 W. HANRAHAN ROAD
AYDEN, NC. 28513
TEL: (252) 531-2711

Ministries Activity Center Addition Mount Pisgah Harnett Original Free Will Baptist Church

145 Prospect Church Road
Erwin, NC.

PROJECT CONSULTANTS

KAIROS PROJECT GROUP, INC.
CONSULTING ENGINEERS
555 FAYETTEVILLE STREET | SUITE 201
RALEIGH, NC 27601 | 919-719-3475
WWW.KPGNC.COM | NC FIRM #: C-3824

STRUCTURAL

NEVILLE ENGINEERING
AUGUSTUS NEVILLE, PE
100-B CULBRETH RD.
CHAPEL HILL, NC 27516
TEL: (919) 740-3427

RON W. WEBB REGISTERED ARCHITECT 3114 9-16-2024 NORTH CAROLINA GREENVILLE, NC

☒ For Construction
■ Not for Construction
☒ Review Set
☐ Bid Set

All drawings and copies thereof are instruments of service and as such remain the property of Ron W. Webb Architect They are to be used only with respect to this project. With the exception of one complete set for each party to the contract, all copies are to be returned or accounted for to Ron W. Webb Architect upon completion of the work. None or part of these drawings may be reproduced without the express written consent of Ron W. Webb Architect. These plans are copyrighted and are subject to copyright protection as an "Architectural Work" under Sec. 102 of the Copyright Act, 17 U.S.O as amended December 1990 and known as Architectural Works Copyright Protection Act of 1990

© COPYRIGHT 2020

Issue Date: 09/20/2023
Plot Date:
Revisions

Mark	Date	Description

Drawing No.
`OCCUPANT CONTENT'
OVERALL FLOOR PLAN **A-5**
of

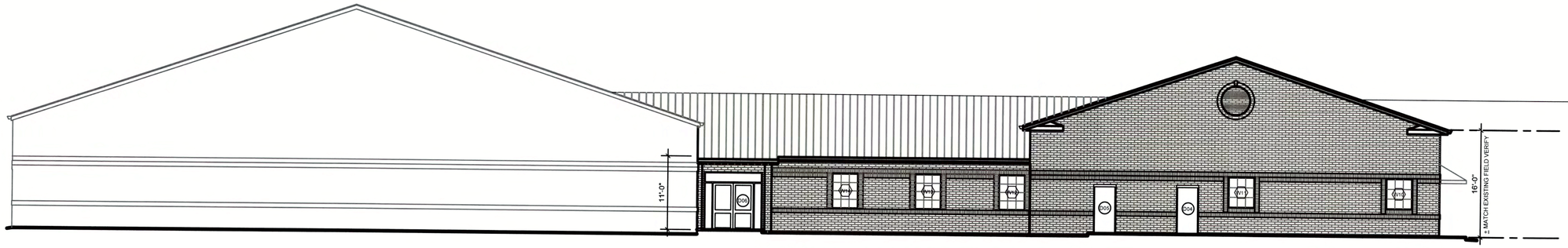

REAR ELEVATION
SCALE; 1/8" = 1'-0"

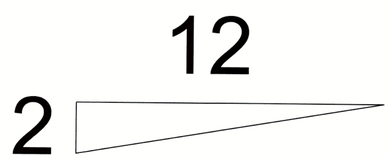

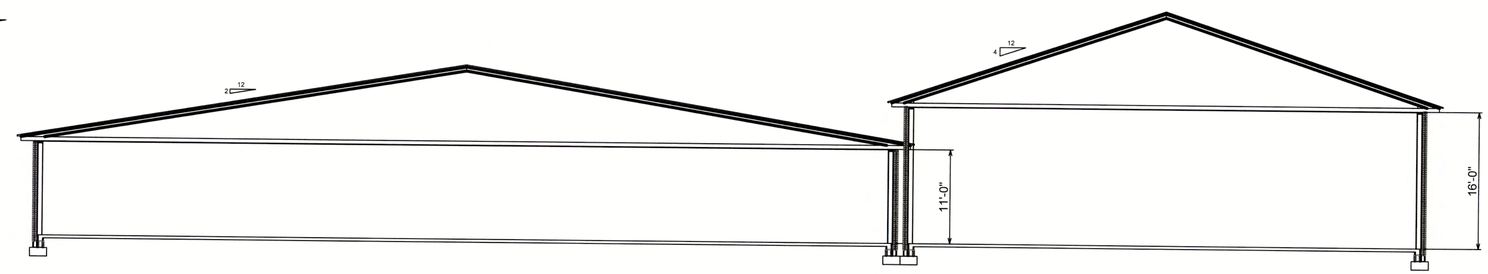

FRONT ELEVATION
SCALE; 1/8" = 1'-0"

PRELIMINARY
NOT FOR CONSTRUCTION
09/08/2023

ARCHITECT

RON W. WEBB
1659 W. HANRAHAN ROAD
AYDEN, NC. 28513
TEL: (252) 531-2711

Ministries Activity Center Addition Mount Pisgah Harnett Original Free Will Baptist Church

145 Prospect Church Road
Erwin, NC.

PROJECT CONSULTANTS

CONSULTING ENGINEERS
555 FAYETTEVILLE STREET | SUITE 201
RALEIGH, NC 27601 | 919-719-3475
WWW.KPGNC.COM | NC FIRM #: C-3824

STRUCTURAL
NEVILLE ENGINEERING
AUGUSTUS NEVILLE, PE
100-B CULBRETH RD.
CHAPEL HILL, NC 27516
TEL: (919) 740-3427

RON W. WEBB ARCHITECT
REGISTERED
3114
09-16-24
NORTH CAROLINA
GREENVILLE, NC

☐ For Construction
☒ Not for Construction

☒ Review Set
☐ Bid Set

All drawings and copies thereof are instruments of service and as such remain the property of Ron W. Webb Architect They are to be used only with respect to this project. With the exception of one complete set for each party to the contract, all copies are to be returned or accounted for to Ron W. Webb Architect upon completion of the work. None or part of these drawings may be reproduced without the express written consent of Ron W. Webb Architect. These plans are copyrighted and are subject to copyright protection as an "Architectural Work" under Sec. 102 of the Copyright Act, 17 U.S.O. as amended December 1990 and known as Architectural Works Copyright Protection Act of 1990
© COPYRIGHT 2020

Issue Date09/20/2023
Plot Date:
Revisions

Mark	Date	Description

Drawing No.
ELEVATIONS
A6
of

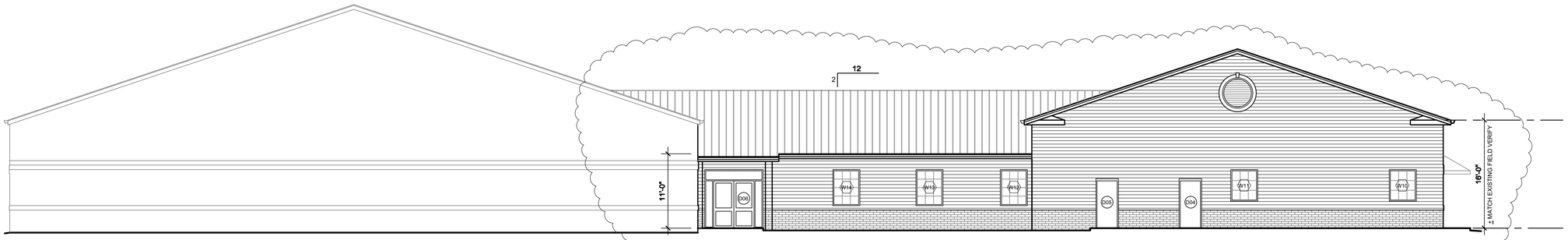

REAR ELEVATION

SCALE; 1/8" = 1'-0"

A

DOOR SCHEDULE						
MARK	SIZE	ELEV.	TYPE	MAT'L	HEIGHT	REMARKS
D01	6'-0" x 7'-0"	SF2	DOUBLE DOOR	ALUM.	@ 8'-0"	STOREFRONT DOOR, 1" TINTED INSUL. GLASS WITH TRANSOM
D02	6'-0" x 7'-0"	SF2	DOUBLE DOOR	ALUM.	@ 8'-0"	STOREFRONT DOOR, 1" TINTED INSUL. GLASS WITH TRANSOM
D03	6'-0" x 7'-0"	SF2	DOUBLE DOOR	ALUM.	@ 8'-0"	STOREFRONT DOOR, 1" TINTED INSUL. GLASS WITH TRANSOM
D04	3'-0" x 7'-0"	D1	SINGLE DOOR	H.M.	@ 7'-4"	
D05	3'-0" x 7'-0"	D1	SINGLE DOOR	H.M.	@ 7'-4"	
D06	6'-0" x 7'-0"	SF1	DOUBLE DOOR	ALUM.	@ 8'-8"	STOREFRONT DOOR, 1" TINTED INSUL. GLASS WITH TRANSOM AND SIDE LITES

WINDOW SCHEDULE						
MARK	SIZE	ELEV.	TYPE	MAT'L	HEIGHT	REMARKS
W01	3'-0" x 4'-0"	W-C	FIXED	ALUM.	@ 8'-8"	STOREFRONT WINDOW, 1" TINTED INSUL. GLASS
W02	3'-0" x 4'-0"	W-C	FIXED	ALUM.	@ 8'-8"	STOREFRONT WINDOW, 1" TINTED INSUL. GLASS
W03	6'-0" x 8'-0"	W-D	FIXED	ALUM.	@ 9'-0"	STOREFRONT WINDOW, 1" TINTED INSUL. GLASS
W04	6'-4" x 11'-2"	W-E	FIXED	ALUM.	@ 11'-10"	STOREFRONT WINDOW, 1" TINTED INSUL. GLASS
W05	12'-0" x 11'-2"	W-F	FIXED	ALUM.	@ 12'-2"	STOREFRONT WINDOW, 1" TINTED INSUL. GLASS
W06	6'-4" x 11'-2"	W-E	FIXED	ALUM.	@ 11'-10"	STOREFRONT WINDOW, 1" TINTED INSUL. GLASS
W07	6'-4" x 11'-2"	W-E	FIXED	ALUM.	@ 11'-10"	STOREFRONT WINDOW, 1" TINTED INSUL. GLASS
W08	6'-4" x 11'-2"	W-E	FIXED	ALUM.	@ 11'-10"	STOREFRONT WINDOW, 1" TINTED INSUL. GLASS
W09	6'-4" x 11'-2"	W-E	FIXED	ALUM.	@ 11'-10"	STOREFRONT WINDOW, 1" TINTED INSUL. GLASS
W10	4'-0" x 4'-8"	W-B	FIXED	ALUM.	@ 8'-8"	STOREFRONT WINDOW, 1" TINTED INSUL. GLASS
W11	4'-0" x 4'-8"	W-B	FIXED	ALUM.	@ 8'-8"	STOREFRONT WINDOW, 1" TINTED INSUL. GLASS
W12	4'-0" x 5'-4"	W-A	FIXED	ALUM.	@ 9'-0"	STOREFRONT WINDOW, 1" TINTED INSUL. GLASS
W13	4'-0" x 5'-4"	W-A	FIXED	ALUM.	@ 9'-0"	STOREFRONT WINDOW, 1" TINTED INSUL. GLASS
W14	4'-0" x 5'-4"	W-A	FIXED	ALUM.	@ 9'-0"	STOREFRONT WINDOW, 1" TINTED INSUL. GLASS

WINDOW AND DOOR ELEVATIONS

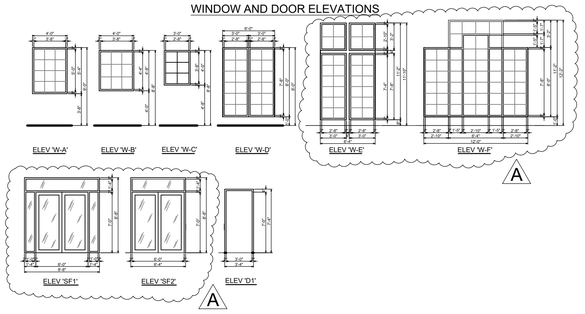

LEFT SIDE ELEVATION

SCALE; 1/8" = 1'-0"

FRONT ELEVATION

SCALE; 1/8" = 1'-0"

ARCHITECT

RON W. WEBB
1659 W. HANRAHAN ROAD
AYDEN, NC. 28513
TEL: (252) 531-2711

Ministries Activity Center Addition Mount Pisgah Harnett Original Free Will Baptist Church

145 Prospect Church Road
Erwin, NC.

PROJECT CONSULTANTS

KAIROS PROJECT GROUP INC.
CONSULTING ENGINEERS 555
FAYETTEVILLE STREET | SUITE 201
RALEIGH, NC 27601 | 919-719-3475
WWW.KPGNC.COM | NC FIRM #: C-3824

STRUCTURAL

NEVILLE ENGINEERING
AUGUSTUS NEVILLE, PE
100-B CULBRETH RD.
CHAPEL HILL, NC 27516
TEL: (919) 740-3427

☒ For Construction
■ Not for Construction
☐ Review Set
☐ Bid Set

All drawings and copies thereof are instruments of service and as such remain the property of Ron W. Webb Architect They are to be used only with respect to this project. With the exception of one complete set for each party to the contract, all copies are to be returned or accounted for to Ron W. Webb Architect upon completion of the work. None or part of these drawings may be reproduced without the express written consent of Ron W. Webb Architect. These plans are copyrighted and are subject to copyright protection as an "Architectural Work" under Sec. 102 of the Copyright Act, 17 U.S.O. as amended December 1990 and known as Architectural Works Copyright Protection Act of 1990

© COPYRIGHT 2020

Issue Date 09/20/2023

Plot Date:

Revisions

Mark	Date	Description
A	10-28-24	Revised window types, changed brick veneer to hardie plank siding on rear elevation and removed mid rails from storefront doors

Drawing No.

ELEVATIONS

A6

of

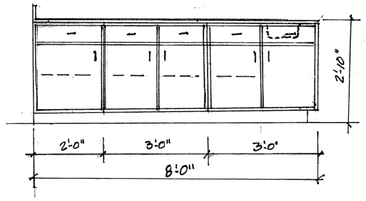

'F' CABINET AT PREP COUNTER
Scale: 1/2"=1'-0"
NOTE: 'H' CABINET IS OPPOSITE

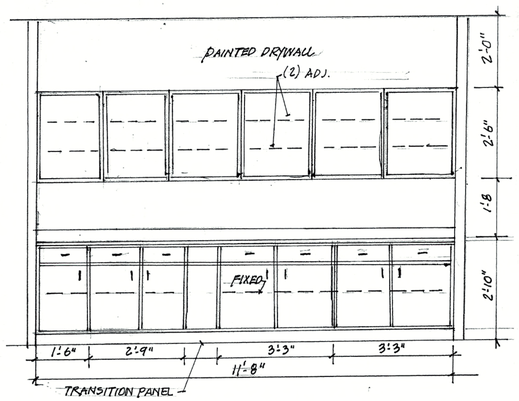

'E' CABINET AT KITCHEN
Scale: 1/2"=1'-0"

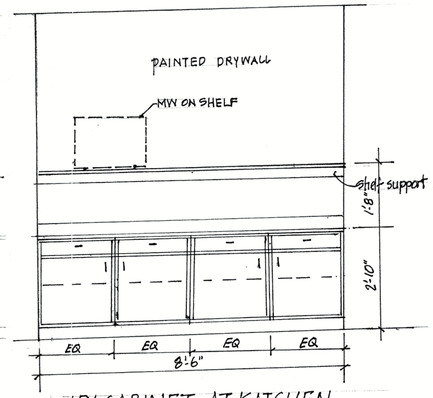

'D' CABINET AT KITCHEN
Scale: 1/2"=1'-0"

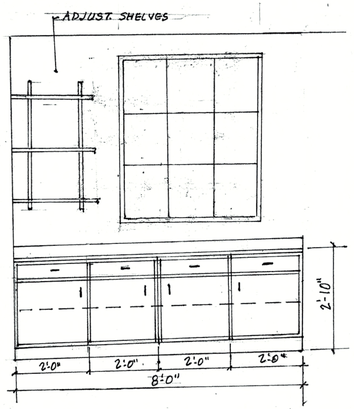

'B' CABINET
SCALE: 1/2"=1'-0"

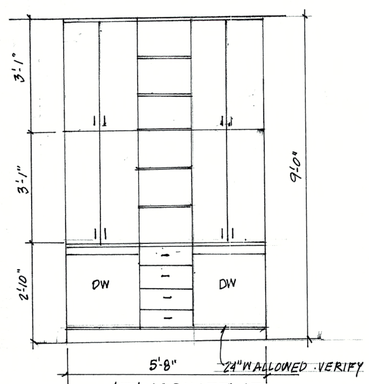

'C' CABINET AT DISH WASHERS
Scale: 1/2"=1'-0"

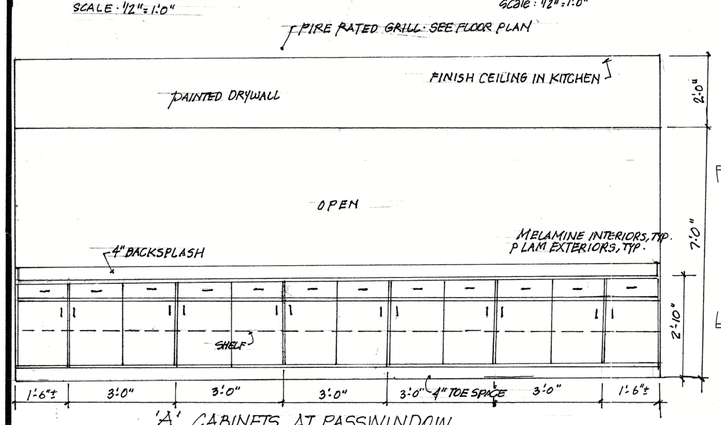

'A' CABINETS AT PASSWINDOW
SCALE: 1/2"=1'-0"

KITCHEN EQUIPMENT SCHEDULE			
MARK	DESCRIPTION	MANUFACTURER	REMARKS
1	ICE MAKER	AVANTCO ICE; UC-F-160A;	REFER TO PLUMBING DRAWINGS
2	SOAP DISPENSER	BOBRICK; MODEL 82216	BY GENERAL CONTRACTOR; 44" MAX. TO OUTLET
3	HAND SINK	AMERICAN STANDARD; MODEL 0355 012 020	REFER TO PLUMBING DRAWINGS
4	FREEZER	SAMSUNG MODEL RZ11M70745A	BY GENERAL CONTRACTOR
5	REFRIGERATOR	FRIGIDAIRE SIDE BY SIDE; 22.3 CF.; S.S.	BY GENERAL CONTRACTOR
6	REFRIGERATOR	FRIGIDAIRE SIDE BY SIDE; 22.3 CF.; S.S.	BY GENERAL CONTRACTOR
7	FOOD WARMER	EXISTING BY OWNER	N.I.C. APPROX. SIZE 24" x 30"
8	RANGE	KUCHT; 4 BURNER; MODEL KNG 301/LP-G	BY GENERAL CONTRACTOR
9	DOUBLE OVEN	SAMSUNG; NV51 T 5511D	BY GENERAL CONTRACTOR
10	RANGE	KUCHT; 4 BURNER; MODEL KNG 301/LP-G	BY GENERAL CONTRACTOR
11	MICROWAVE ON SHELF	LG; LMC 1575 21; 1250 WATT	BY GENERAL CONTRACTOR
12	FRYER	EXISTING BY OWNER	N.I.C. APPROX. SIZE 24" x 32"
13	PREP SINK	ELKAY DAYTON; D11515	REFER TO PLUMBING DRAWINGS
14	PREP SINK	ELKAY DAYTON; D11515	REFER TO PLUMBING DRAWINGS
15	30" x 48" ROLLING COFFEE SERVICE	STILTON; 18 GA. S.S.; ON CASTERS	BY GENERAL CONTRACTOR
16	3 COMPARTMENT SINK	ADVANCE TABCO; FC-3-1818 18RL	BY GENERAL CONTRACTOR
17	RANGE HOOD	COSMO; 30" DUCTED; S.S.; UNDER CABINET	BY GENERAL CONTRACTOR
18	FAUCET EXTENSION	DELTA; 18803-DST; ANTONI 1.8 GEM	BY GENERAL CONTRACTOR
19	DISHWASHER	T.B.D.	BY GENERAL CONTRACTOR
20	DISHWASHER	T.B.D.	BY GENERAL CONTRACTOR

NOTE: 1. REFER TO PME DRAWINGS FOR ALL CONNECTIONS AND PIPE SIZING ETC.
2. ALL MANUFACTURERES AND MODEL NUMBERS ARE AS PROVIDED BY OWNERS

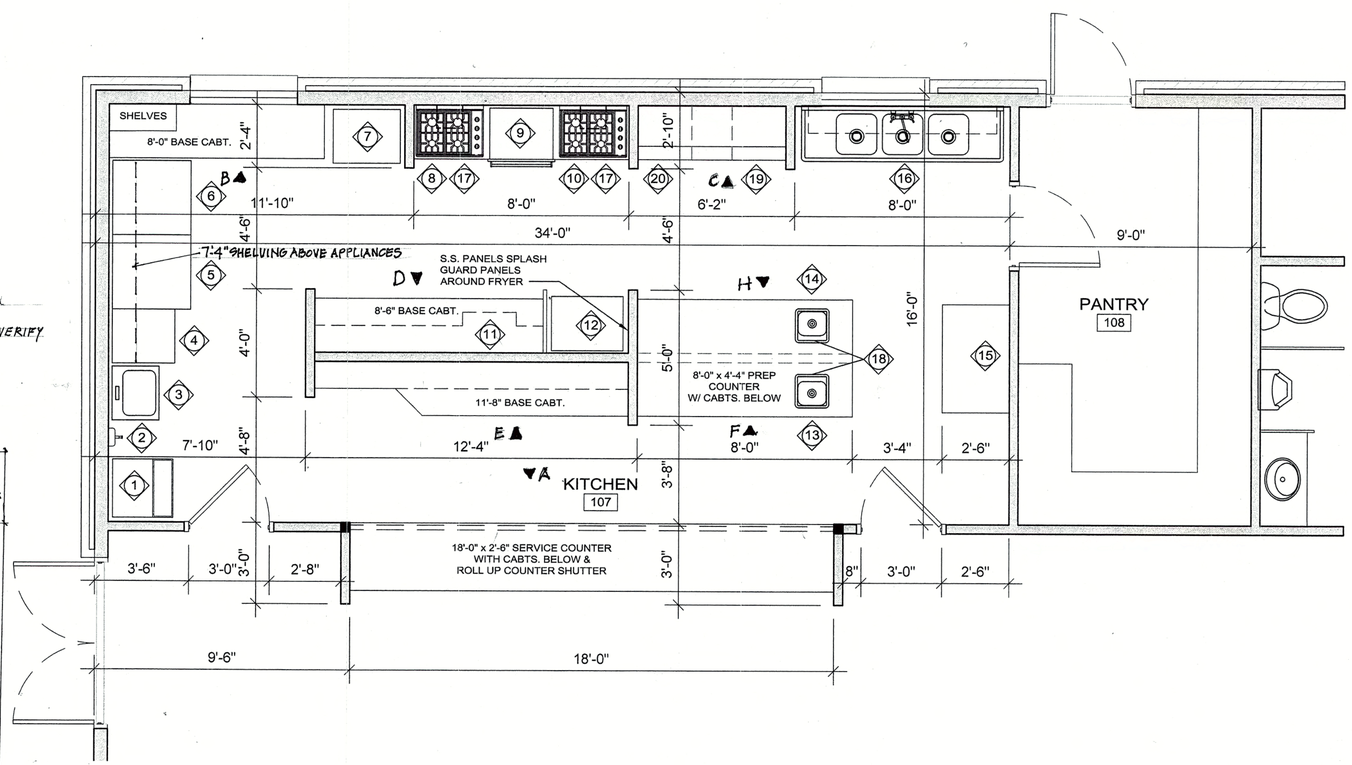

ENLARGED KITCHEN PLAN
SCALE; 3/8" = 1'-0"

ARCHITECT

RON W. WEBB
1659 W. HANRAHAN ROAD
AYDEN, NC. 28513
TEL: (252) 531-2711

Ministries Activity Center Addition Mount Pisgah Harnett Original Free Will Baptist Church

145 Prospect Church Road
Erwin, NC.

PROJECT CONSULTANTS

KAIROS PROJECT GROUP, INC.
CONSULTING ENGINEERS
555 FAYETTEVILLE STREET | SUITE 201
RALEIGH, NC 27601 | 919-719-3475
WWW.KPGNC.COM | NC FIRM #: C-3824

STRUCTURAL
NEVILLE ENGINEERING
AUGUSTUS NEVILLE, PE
100-B CULBRETH RD.
CHAPEL HILL, NC 27516
TEL: (919) 740-3427

RON W. WEBB REGISTERED ARCHITECT 3114 NORTH CAROLINA GREENVILLE, NC
9-16-2024

☒ For Construction
☐ Not for Construction
☒ Review Set
☐ Bid Set

All drawings and copies thereof are instruments of service and as such remain the property of Ron W. Webb Architect They are to be used only with respect to this project. With the exception of one complete set for each party to the contract, all copies are to be returned or accounted for to Ron W. Webb Architect upon completion of the work. None or part of these drawings may be reproduced without the express written consent of Ron W. Webb Architect. These plans are copyrighted and are subject to copyright protection as an "Architectural Work" under Sec. 102 of the Copyright Act, 17 U.S.C. as amended December 1990 and known as Architectural Works Copyright Protection Act of 1990
© COPYRIGHT 2020

Issue Date: 09/20/2023
Plot Date:
Revisions

Mark	Date	Description

Drawing No.
ENLARGED KITCHEN PLAN
A-7
of

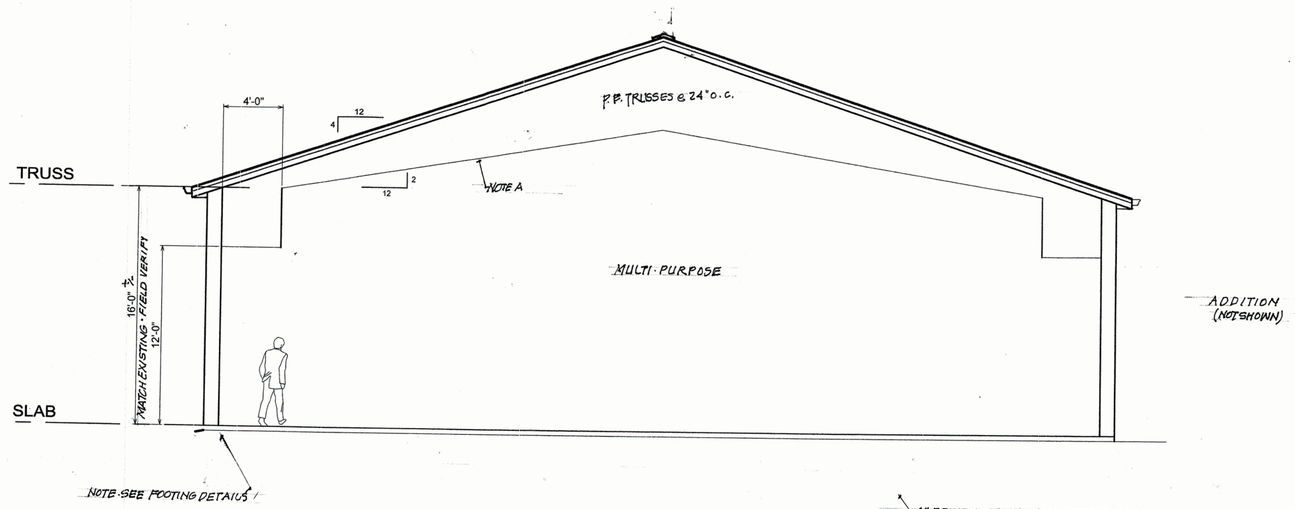

DIAGRAMMIC SECTION

NOTE: SEE ELECTRICAL FOR LIGHTS

NOTE A: 3/8" PAINTED DRYWALL ON METAL FURRING STRIPS FRONT TO REAR WALL.

ARCHITECT

RON W. WEBB
1659 W. HANRAHAN ROAD
AYDEN, NC. 28513
TEL: (252) 531-2711

Ministries Activity Center Addition Mount Pisgah Harnett Original Free Will Baptist Church

145 Prospect Church Road
Erwin, NC.

Project Consultants

KAIROS PROJECT GROUP INC.
CONSULTING ENGINEERS 555
FAYETTEVILLE STREET | SUITE 201
RALEIGH, NC 27601 | 919-719-3475
WWW.KPGNC.COM | NC FIRM #: C-3824

STRUCTURAL

NEVILLE ENGINEERING
AUGUSTUS NEVILLE, PE
100-B CULBRETH RD.
CHAPEL HILL, NC 27516
TEL: (919) 740-3427

RON W. WEBB REGISTERED ARCHITECT 3114 NORTH CAROLINA GREENVILLE, NC
9-16-2024

☒ For Construction
☐ Not for Construction
☒ Review Set
☐ Bid Set

All drawings and copies thereof are instruments of service and as such remain the property of Ron W. Webb Architect They are to be used only with respect to this project. With the exception of one complete set for each party to the contract, all copies are to be returned or accounted for to Ron W. Webb Architect upon completion of the work. None or part of these drawings may be reproduced without the express written consent of Ron W. Webb Architect. These plans are copyrighted and are subject to copyright protection as an "Architectural Work" under Sec. 102 of the Copyright Act, 17 U.S.O. as amended December 1990 and known as Architectural Works

Issue Date09/20/2023

Plot Date:

Revisions

Mark	Date	Description

Drawing No.

SHEET NAME
·MISCELLANEOUS
·DETAILS·

A-8

of

Note to plan reviewer: This will be an addition with a 3hr. Fire Wall
to constitute a zero lot line separate building.
Occ. loads- Multipurpose- 15sqft. net- 49'x64'= 3136/15= 209 occ.
Classrooms- 20sqft. net- 15x23x2= 690/20= 35 occ.
15x11x2= 330/20= 17 occ.
Totals- 209+35+17= 261 Occupants

2018 APPENDIX B
BUILDING CODE SUMMARY FOR ALL COMMERCIAL PROJECTS
(EXCEPT 1 AND 2-FAMILY DWELLINGS AND TOWNHOUSES)
(Reproduce the following data on the building plans sheet 1 or 2)

Name of Project: Mount Pisgah Harnett Original Free Will Baptist Church- Life Center/Classrooms/Kitchen
Address: 145 Prospect Church Rd., Erwin, NC Zip Code 28339
Owner/Authorized Agent: Reginald Hinton Phone # (919) 215 - 3064 E-Mail rhinton528@gmail.com
Owned By: ☐ City/County ☑ Private ☐ State
Code Enforcement Jurisdiction: ☐ City ☑ County ☐ State

CONTACT:

DESIGNER	FIRM	NAME	LICENSE #	TELEPHONE #	E-MAIL
Architectural	Ron W. Webb, Architect	Ron W. Webb	51408	252-531-2711	wgarryowen@cs.com
Civil					
Electrical	Karios Project Group	Ben Lewis	3824	919-741-8223	blewis@kpgnc.com
Fire Alarm					
Plumbing	Karios Project Group	Ben Lewis	3824	919-741-8223	blewis@kpgnc.com
Mechanical	Karios Project Group	Ben Lewis	3824	919-741-8223	blewis@kpgnc.com
Sprinkler-Standpipe					
Structural	Neville Engineering	Agustus Neville		919-740-3427	
Retaining Walls >5' High					
Other					

("Other" should include firms and individuals such as truss, precast, pre-engineered, interior designers, etc.)

2018 NC BUILDING CODE: ☑ New Building ☐ Addition ☐ Renovation
☐ 1st Time Interior Completion
☐ Shell/Core - Contact the local inspection jurisdiction for possible additional procedures and requirements
☐ Phased Construction - Shell/Core- Contact the local inspection jurisdiction for possible additional procedures and requirements

2018 NC EXISTING BUILDING CODE: EXISTING: ☐ Prescriptive ☐ Repair ☐ Chapter 14
Alteration: ☐ Level I ☐ Level II ☐ Level III
☐ Historic Property ☐ Change of Use

CONSTRUCTED: (date) ________ **CURRENT OCCUPANCY(S)** (Ch. 3): ________
RENOVATED: (date) ________ **PROPOSED OCCUPANCY(S)** (Ch. 3): A3

RISK CATEGORY (Table 1604.5): **Current:** ☐ I ☐ II ☐ III ☐ IV
Proposed: ☐ I ☐ II ☐ III ☐ IV

BASIC BUILDING DATA
Construction Type: ☐ I-A ☐ II-A ☐ III-A ☐ IV ☐ V-A
(check all that apply) ☐ I-B ☐ II-B ☑ III-B ☐ V-B
Sprinklers: ☑ No ☐ Partial ☐ Yes ☐ NFPA 13 ☐ NFPA 13R ☐ NFPA 13D
Standpipes: ☑ No ☐ Yes Class ☐ I ☐ II ☐ III ☐ Wet ☐ Dry
Fire District: ☑ No ☐ Yes **Flood Hazard Area:** ☑ No ☐ Yes
Special Inspections Required: ☑ No ☐ Yes (Contact the local inspection jurisdiction for additional procedures and requirements.)

STORY NO.	DESCRIPTION AND USE	(A) BLDG AREA PER STORY (ACTUAL)	(B) TABLE 506.2[4] AREA	(C) AREA FOR FRONTAGE INCREASE[1,5]	(D) ALLOWABLE AREA PER STORY OR UNLIMITED[2,3]
1	A3- Life Center & Classrooms	11000	9500	4750	14250

[1] Frontage area increases from Section 506.3 are computed thus:
a. Perimeter which fronts a public way or open space having 20 feet minimum width = 320 (F)
b. Total Building Perimeter = 420 (P)
c. Ratio (F/P) = .76 (F/P)
d. W = Minimum width of public way = 30 (W)
e. Percent of frontage increase $I_f = 100[F/P - 0.25] \times W/30$ = 50 (%)
[2] Unlimited area applicable under conditions of Section 507.
[3] Maximum Building Area = total number of stories in the building x D (maximum3 stories) (506.2).
[4] The maximum area of open parking garages must comply with Table 406.5.4.
[5] Frontage increase is based on the unsprinklered area value in Table 506.2.

ALLOWABLE HEIGHT

	ALLOWABLE	SHOWN ON PLANS	CODE REFERENCE[1]
Building Height in Feet (Table 504.3)[2]	55	16	
Building Height in Stories (Table 504.4)[3]	2	1	

[1] Provide code reference if the "Shown on Plans" quantity is not based on Table 504.3 or 504.4.
[2] The maximum height of air traffic control towers must comply with Table 412.3.1.
[3] The maximum height of open parking garages must comply with Table 406.5.4.

PERCENTAGE OF WALL OPENING CALCULATIONS

FIRE SEPARATION DISTANCE (FEET) FROM PROPERTY LINES	DEGREE OF OPENINGS PROTECTION (TABLE 705.8)	ALLOWABLE AREA (%)	ACTUAL SHOWN ON PLANS (%)
>30'	Unprotected, Non sprinkler	No Limit	

LIFE SAFETY SYSTEM REQUIREMENTS

Emergency Lighting: ☐ No ☑ Yes
Exit Signs: ☐ No ☑ Yes
Fire Alarm: ☑ No ☐ Yes
Smoke Detection Systems: ☐ No ☐ Yes ☑ Partial ______ Duct detectors in units >2000 cfm
Carbon Monoxide Detection: ☑ No ☐ Yes

LIFE SAFETY PLAN REQUIREMENTS

Life Safety Plan Sheet #: LS-1

☑ Fire and/or smoke rated wall locations (Chapter 7)
☐ Assumed and real property line locations (if not on the site plan)
☐ Exterior wall opening area with respect to distance to assumed property lines (705.8)
☑ Occupancy Use for each area as it relates to occupant load calculation (Table 1004.1.2)
☑ Occupant loads for each area
☑ Exit sign locations (1013)
☑ Exit access travel distances (1017)
☐ Common path of travel distances (Tables 1006.2.1 & 1006.3.2(1))
☐ Dead end lengths (1020.4)
☐ Clear exit widths for each exit door
☐ Maximum calculated occupant load capacity each exit door can accommodate based on egress width (1005.3)
☐ Actual occupant load for each exit door
☐ A separate schematic plan indicating where fire rated floor/ceiling and/or roof structure is provided for purposes of occupancy separation
☑ Location of doors with panic hardware (1010.1.10)
☐ Location of doors with delayed egress locks and the amount of delay (1010.1.9.7)
☐ Location of doors with electromagnetic egress locks (1010.1.9.9)
☐ Location of doors equipped with hold-open devices
☐ Location of emergency escape windows (1030)
☐ The square footage of each fire area (202)
☐ The square footage of each smoke compartment for Occupancy Classification I-2 (407.5)
☐ Note any code exceptions or table notes that may have been utilized regarding the items above

Gross Building Area Table

Note to plan reviewer:

FLOOR	EXISTING (SQ FT)	NEW (SQ FT)	SUB-TOTAL
3rd Floor	0	0	0
2nd Floor	0	0	0
Mezzanine	0	0	0
1st Floor	0	11000	0
Basement	0		0
TOTAL	0	11000	0

ALLOWABLE AREA

Note to plan reviewer: Classrooms shown are considered A3 occupancy as accessory religious rooms < 100 occupant load. NCSBC Sect. 303.1.4

Primary Occupancy Classification(s):
Assembly ☐ A-1 ☐ A-2 ☑ A-3 ☐ A-4 ☐ A-5
Business ☐
Educational ☐
Factory ☐ F-1 Moderate ☐ F-2 Low
Hazardous ☐ H-1 Detonate ☐ H-2 Deflagrate ☐ H-3 Combust ☐ H-4 Health ☐ H-5 HPM
Institutional ☐ I-1 Condition ☐ 1 ☐ 2
☐ I-2 Condition ☐ 1 ☐ 2
☐ I-3 Condition ☐ 1 ☐ 2 ☐ 3 ☐ 4 ☐ 5
☐ I-4
Mercantile ☐
Residential ☐ R-1 ☐ R-2 ☐ R-3 ☐ R-4
Storage ☐ S-1 Moderate ☐ S-2 Low ☐ High-piled
☐ Parking Garage ☐ Open ☐ Enclosed ☐ Repair Garage
Utility and Miscellaneous ☐

Accessory Occupancy Classification(s): S1 Storage <10% of aggregate area
Incidental Uses (Table 509): ________
Special Uses (Chapter 4 – List Code Sections): ________
Special Provisions: (Chapter 5 – List Code Sections): ________
Mixed Occupancy: ☑ No ☐ Yes Separation: ____ Hr. Exception: ________

☐ Non-Separated Use (508.3) - The required type of construction for the building shall be determined by applying the height and area limitations for each of the applicable occupancies to the entire building. The most restrictive type of construction, so determined, shall apply to the entire building.

☐ Separated Use (508.4) - See below for area calculations for each story, the area of the occupancy shall be such that the sum of the ratios of the actual floor area of each use divided by the allowable floor area for each use shall not exceed 1.

$$\frac{\text{Actual Area of Occupancy A}}{\text{Allowable Area of Occupancy A}} + \frac{\text{Actual Area of Occupancy B}}{\text{Allowable Area of Occupancy B}} \leq 1$$

________ + ________ + ... = ______ ≤ 1.00

FIRE PROTECTION REQUIREMENTS

BUILDING ELEMENT	FIRE SEPARATION DISTANCE (FEET)	RATING REQ'D	RATING PROVIDED (W/ ____* REDUCTION)	DETAIL # AND SHEET #	DESIGN # FOR RATED ASSEMBLY	SHEET # FOR RATED PENETRATION	SHEET # FOR RATED JOINTS
Structural Frame, including columns, girders, trusses							
Bearing Walls							
Exterior							
North	>30'						
East	0	3hr.	3hr.		U419		
West	>30'						
South	>30'						
Interior							
Nonbearing Walls and Partitions							
Exterior walls							
North							
East							
West							
South							
Interior walls and partitions							
Floor Construction Including supporting beams and joists		N/A					
Floor Ceiling Assembly		N/A					
Columns Supporting Floors		N/A					
Roof Construction, including supporting beams and joists		N/A					
Roof Ceiling Assembly		N/A					
Columns Supporting Roof		N/A					
Shaft Enclosures - Exit		N/A					
Shaft Enclosures - Other		N/A					
Corridor Separation		1 hr.	1 hr.		U305- wall	T722.6.2(1)	Ceiling
Occupancy/Fire Barrier Separation		N/A					
Party/Fire Wall Separation		3 hr.	3 hr.		U419		
Smoke Barrier Separation		N/A					
Smoke Partition		N/A					
Tenant/Dwelling Unit/ Sleeping Unit Separation		N/A					
Incidental Use Separation		N/A					

* Indicate section number permitting reduction

NCSBC T722.6.2(1)- For ceiling- 2 layers 5/8" Type X= 80 minutes. 60 minutes required.

ACCESSIBLE DWELLING UNITS
(SECTION 1107)

UNIT CLASSIFICATION	TOTAL UNITS	ACCESSIBLE UNITS REQUIRED	ACCESSIBLE UNITS PROVIDED	TYPE A UNITS REQUIRED	TYPE A UNITS PROVIDED	TYPE B UNITS REQUIRED	TYPE B UNITS PROVIDED	TOTAL ACCESSIBLE UNITS PROVIDED
N/A								

ACCESSIBLE PARKING
(SECTION 1106)

LOT OR PARKING AREA	TOTAL # OF PARKING SPACES REQUIRED	TOTAL # OF PARKING SPACES PROVIDED	# OF ACCESSIBLE SPACES PROVIDED 96" SPACES	# OF ACCESSIBLE SPACES PROVIDED 132" SPACES	TOTAL # ACCESSIBLE PROVIDED
TOTAL					

PLUMBING FIXTURE REQUIREMENTS
(TABLE 2902.1)

Note to plan reviewer:

USE		WATER CLOSETS MALE	WATER CLOSETS FEMALE	WATER CLOSETS UNISEX	URINALS	LAVATORIES MALE	LAVATORIES FEMALE	LAVATORIES UNISEX	SHOWERS /TUBS	DRINKING FOUNTAINS REGULAR	DRINKING FOUNTAINS ACCESSIBLE
SPACE 261 Occ.	EXIST'G										
	NEW	2	4	1	2	2	2	1	2	3	3
	REQ'D	2	3	0	0	1	1	0	0	1	1

SPECIAL APPROVALS

Special approval: (Local Jurisdiction, Department of Insurance, OSC, DPI, DHHS, etc., describe below)
Local Jurisdiction

ARCHITECT

RON W. WEBB
1659 W. HANRAHAN ROAD
AYDEN, NC. 28513
TEL: (252) 531-2711

Ministries Activity Center Addition Mount Pisgah Harnett Original Free Will Baptist Church

145 Prospect Church Road
Erwin, NC.

Project Consultants

KAIROS PROJECT GROUP INC.
CONSULTING ENGINEERS 555 FAYETTEVILLE STREET | SUITE 201
RALEIGH, NC 27601 | 919-719-3475
WWW.KPGNC.COM | NC FIRM #: C-3824

STRUCTURAL
NEVILLE ENGINEERING
AUGUSTUS NEVILLE, PE
100-B CULBRETH RD.
CHAPEL HILL, NC 27516
TEL: (919) 740-3427

☒ For Construction
■ Not for Construction
☒ Review Set
☐ Bid Set

All drawings and copies thereof are instruments of service and as such remain the property of Ron W. Webb Architect They are to be used only with respect to this project. With the exception of one complete set for each party to the contract, all copies are to be returned or accounted for to Ron W. Webb Architect upon completion of the work. None or part of these drawings may be reproduced without the express written consent of Ron W. Webb Architect. These plans are copyrighted and are subject to copyright protection as an "Architectural Work" under Sec. 102 of the Copyright Act, 17 U.S.O. as amended December 1990 and known as Architectural Works

Issue Date 09/20/2023
Plot Date:
Revisions

Mark	Date	Description

SHEET NAME BCS

Drawing No. 1

of

Note to plan reviewer:

ENERGY SUMMARY

ENERGY REQUIREMENTS:
The following data shall be considered minimum and any special attribute required to meet the energy code shall also be provided. Each Designer shall furnish the required portions of the project information for the plan data sheet. If performance method, state the annual energy cost for the standard reference design vs annual energy cost for the proposed design.

Existing building envelope complies with code: ☐ No ☐ Yes (The remainder of this section is not applicable)

Exempt Building: ☑ No ☐ Yes (Provide code or statutory reference): _____

Climate Zone: ☐ 3A ☑ 4A ☐ 5A

Method of Compliance: Energy Code ☐ Performance ☑ Prescriptive
ASHRAE 90.1 ☐ Performance ☐ Prescriptive
(If "Other" specify source here)_____

THERMAL ENVELOPE (Prescriptive method only)

Roof/ceiling Assembly (each assembly) Batt or Blown R42 insulation
Description of assembly: _____
U-Value of total assembly: _____
R-Value of insulation: R-42
Skylights in each assembly: _____
U-Value of skylight: _____
total square footage of skylights in each assembly: _____

Exterior Walls (each assembly) R-13 Batt cavity filled insulation + R-7.5, 1 1/2" Polystyrene (XPS) rigid foam insulation on exterior of metal studs. See attached product data sheet from manufacturer.
Description of assembly: _____
U-Value of total assembly: _____
R-Value of insulation: R13+R7.5c.i.
Openings (windows or doors with glazing)
U-Value of assembly: _____
Solar heat gain coefficient: _____
projection factor: _____
Door R-Values: _____

Walls below grade (each assembly)
Description of assembly: _____
U-Value of total assembly: _____
R-Value of insulation: _____

Floors over unconditioned space
Description of assembly: _____
U-Value of total assembly: _____
R-Value of insulation: _____

Floors slab on grade R-15 Polystyrene termite resistant rigid foam for 24"
Description of assembly: _____
U-Value of total assembly: _____
R-Value of insulation: R-15
Horizontal/vertical requirement: _____
slab heated: _____

2018 APPENDIX B
BUILDING CODE SUMMARY FOR ALL COMMERCIAL PROJECTS
MECHANICAL DESIGN
(PROVIDE ON THE MECHANICAL SHEETS IF APPLICABLE)

MECHANICAL SUMMARY *Note to plan reviewer: SEE MECHANICAL DRAWINGS FOR MECHANICAL SUMMARY INFORMATION*

MECHANICAL SYSTEMS, SERVICE SYSTEMS AND EQUIPMENT

Thermal Zone
winter dry bulb: _____
summer dry bulb: _____

Interior design conditions
winter dry bulb: _____
summer dry bulb: _____
relative humidity: _____

Building heating load: _____

Building cooling load: _____

Mechanical Spacing Conditioning System
Unitary
description of unit: _____
heating efficiency: _____
cooling efficiency: _____
size category of unit: _____
Boiler
Size category. If oversized, state reason.: _____
Chiller
Size category. If oversized, state reason.: _____

List equipment efficiencies: _____

2018 APPENDIX B
BUILDING CODE SUMMARY FOR ALL COMMERCIAL PROJECTS
STRUCTURAL DESIGN
(PROVIDE ON THE STRUCTURAL SHEETS IF APPLICABLE)

DESIGN LOADS: *Note to plan reviewer:*

Importance Factors: Snow (I_S) 1.0
Seismic (I_E) 1.0

Live Loads: Roof 20 psf
Mezzanine N/A psf
Floor 100 psf

Ground Snow Load: 15 psf

Wind Load: Ultimate Wind Speed 120 mph (ASCE-7)
Exposure Category D

SEISMIC DESIGN CATEGORY: ☐ A ☐ B ☐ C ☐ D
Provide the following Seismic Design Parameters:
Risk Category (Table 1604.5) ☐ I ☐ II ☐ III ☐ IV
Spectral Response Acceleration S_S XX.X %g S_1 XX.X %g
Site Classification (ASCE 7) ☐ A ☐ B ☐ C ☐ D ☐ E ☐ F
Data Source: ☐ Field Test ☐ Presumptive ☐ Historical Data
Basic structural system ☑ Bearing Wall ☐ Dual w/Special Moment Frame
☐ Building Frame ☐ Dual w/Intermediate R/C or Special Steel
☐ Moment Frame ☐ Inverted Pendulum
Analysis Procedure: ☐ Simplified ☐ Equivalent Lateral Force ☐ Dynamic
Architectural, Mechanical, Components anchored? ☑ Yes ☐ No

LATERAL DESIGN CONTROL: Earthquake ☐ Wind ☑

SOIL BEARING CAPACITIES:
Field Test (provide copy of test report) To be provided psf
Presumptive Bearing capacity 2000 psf
Pile size, type, and capacity _____

2018 APPENDIX B
BUILDING CODE SUMMARY FOR ALL COMMERCIAL PROJECTS
ELECTRICAL DESIGN
(PROVIDE ON THE ELECTRICAL SHEETS IF APPLICABLE)

ELECTRICAL SUMMARY *Note to plan reviewer: SEE ELECTRICAL DRAWINGS FOR ELECTRICAL SUMMARY INFORMATION*

ELECTRICAL SYSTEM AND EQUIPMENT

Method of Compliance: Energy Code ☐ Performance ☐ Prescriptive
ASHRAE 90.1 ☐ Performance ☐ Prescriptive

Lighting schedule (each fixture type)
lamp type required in fixture
number of lamps in fixture
ballast type used in the fixture
number of ballasts in fixture
total wattage per fixture
total interior wattage specified vs. allowed (whole building or space by space)
total exterior wattage specified vs. allowed

Additional Efficiency Package Options
(When using the 2018 NCECC; not required for ASHRAE 90.1)
☐ C406.2 More Efficient HVAC Equipment Performance
☐ C406.3 Reduced Lighting Power Density
☐ C406.4 Enhanced Digital Lighting Controls
☐ C406.5 On-Site Renewable Energy
☐ C406.6 Dedicated Outdoor Air System
☐ C406.7 Reduced Energy Use in Service Water Heating

ARCHITECT

RON W. WEBB
1659 W. HANRAHAN ROAD
AYDEN, NC. 28513
TEL: (252) 531-2711

Ministries Activity Center Addition
Mount Pisgah Harnett Original Free Will Baptist Church

145 Prospect Church Road
Erwin, NC.

Project Consultants

KAIROS PROJECT GROUP INC.
CONSULTING ENGINEERS 555 FAYETTEVILLE STREET | SUITE 201 RALEIGH, NC 27601 | 919-719-3475 WWW.KPGNC.COM | NC FIRM #: C-3824

STRUCTURAL
NEVILLE ENGINEERING
AUGUSTUS NEVILLE, PE
100-B CULBRETH RD.
CHAPEL HILL, NC 27516
TEL: (919) 740-3427

RON W. WEBB REGISTERED 3114 NORTH CAROLINA ARCHITECT GREENVILLE, NC 9-16-2024

☐ For Construction
☐ Not for Construction
☐ Review Set
☐ Bid Set

All drawings and copies thereof are instruments of service and as such remain the property of Ron W. Webb Architect They are to be used only with respect to this project. With the exception of one complete set for each party to the contract, all copies are to be returned or accounted for to Ron W. Webb Architect upon completion of the work. None or part of these drawings may be reproduced without the express written consent of Ron W. Webb Architect. These plans are copyrighted and are subject to copyright protection as an "Architectural Work" under Sec. 102 of the Copyright Act, 17 U.S.O. as amended December 1990 and known as Architectural Works

Issue Date 09/20/2023
Plot Date:
Revisions

Mark	Date	Description

SHEET NAME BCS Drawing No. 2

of

Neville Engineering

919-740-3427

213 River Birch Lane
Chapel Hill, NC 27514

neveng@aol.com

December 6, 2024

Mr. Ron Webb, Architect
Ayden, NC

Re: Structural Metal Studs
Mount Pisgah Free Will Baptist Church
Erwin, NC

Dear Ron,

I am pleased to provide this design for the structural metal studs for the referenced project. I have enclosed a print of the framing plan with the type of stud to be used marked with numbers 1 thru 3.

Studs for the left end wall and rear wall are marked Type 1 and are to be 600S200-54 at 16" on center.

Studs for the front wall are marked Type 2 and are to be 600S200-54 at 10" on center and are to be braced at the bottom of the roof trusses by connecting to the trusses and adding diagonal bracing from the bottom chord of the truss to the roof. Provide 4 king studs at each side of the window and door openings.

Studs in the other locations are marked Type 3 and are to be 600S137-33 at 16" on center.

Please contact me if you have questions.

Sincerely,

Augustus Neville, PE

NORTH CAROLINA PROFESSIONAL SEAL 005114 ENGINEER AUGUSTUS NEVILLE III

6 Dec 24

Structural Metal studs

ROOM FINISH SCHEDULE							
No.	NAME	FLOOR	BASE	WALLS	CEILING	HT.	REMARKS
001	ENTRY PORCH	EXPOSED CONC.	N/A	N/A	VENTED VINYL	11'-0"	BROOM FINISH CONC.
101	LOBBY	VCT	4" RUBBER	PAINTED GWB	2x2 AC. TILE	10'-0"	
102	MULTI PURPOSE	VCT	4" RUBBER	PAINTED GWB	2x2 AC. TILE	SLOPED	
103	SECURITY	CARPET	4" RUBBER	PAINTED GWB	2x2 AC. TILE	10'-0"	
104	MULTI MEDIA	CARPET	4" RUBBER	PAINTED GWB	2x2 AC. TILE	10'-0"	
105	STORAGE	VCT	4" RUBBER	PAINTED GWB	2x2 AC. TILE	10'-0"	
106	JAN. / STORAGE	VCT	4" RUBBER	PAINTED GWB	2x2 AC. TILE	10'-0"	
107	KITCHEN	VCT	4" RUBBER	PAINTED GWB	2x2 AC. TILE	10'-0"	FRP PANELS 6'-0" HIGH, EPOXY PAINT ABOVE
108	PANTRY	VCT	4" RUBBER	PAINTED GWB	2x2 AC. TILE	10'-0"	
109	ELECTRIC	EXPOSED CONC.	4" RUBBER	PAINTED GWB	PAINTED GWB	16'-0"	
110	FAMILY TOILET	VCT	4" RUBBER	PAINT & TILE	2x2 AC. TILE	10'-0"	TILE TO 7'-0" HIGH, EPOXY PAINT ABOVE
111	CLASSROOM	CARPET	4" RUBBER	PAINTED GWB	2x2 AC. TILE	10'-0"	
112	CLASSROOM	CARPET	4" RUBBER	PAINTED GWB	2x2 AC. TILE	10'-0"	
113	CLASSROOM	CARPET	4" RUBBER	PAINTED GWB	2x2 AC. TILE	10'-0"	
114	REAR LOBBY	VCT	4" RUBBER	PAINTED GWB	2x2 AC. TILE	10'-0"	
115	REAR CORRIDOR	VCT	4" RUBBER	PAINTED GWB	2x2 AC. TILE	10'-0"	
116	WOMEN	CERAMIC TILE	CERAMIC TILE	PAINT & TILE	2x2 AC. TILE	10'-0"	TILE TO 7'-0" HIGH, EPOXY PAINT ABOVE
117	MEN	CERAMIC TILE	CERAMIC TILE	PAINT & TILE	2x2 AC. TILE	10'-0"	TILE TO 7'-0" HIGH, EPOXY PAINT ABOVE
118	CLASSROOM	CARPET	4" RUBBER	PAINTED GWB	2x2 AC. TILE	10'-0"	
119	CLASSROOM	CARPET	4" RUBBER	PAINTED GWB	2x2 AC. TILE	10'-0"	
120	MAIN CORRIDOR	VCT	4" RUBBER	PAINTED GWB	2x2 AC. TILE	10'-0"	

Type 1 600S200-54 @ 16" cts
Type 1 600S200-54 @ 10" cts
Connect to truss bottom chord
@ provide diagonal brace to roof
@ 48" maximum centers
Type 3 600S137-33 @ 16" cts

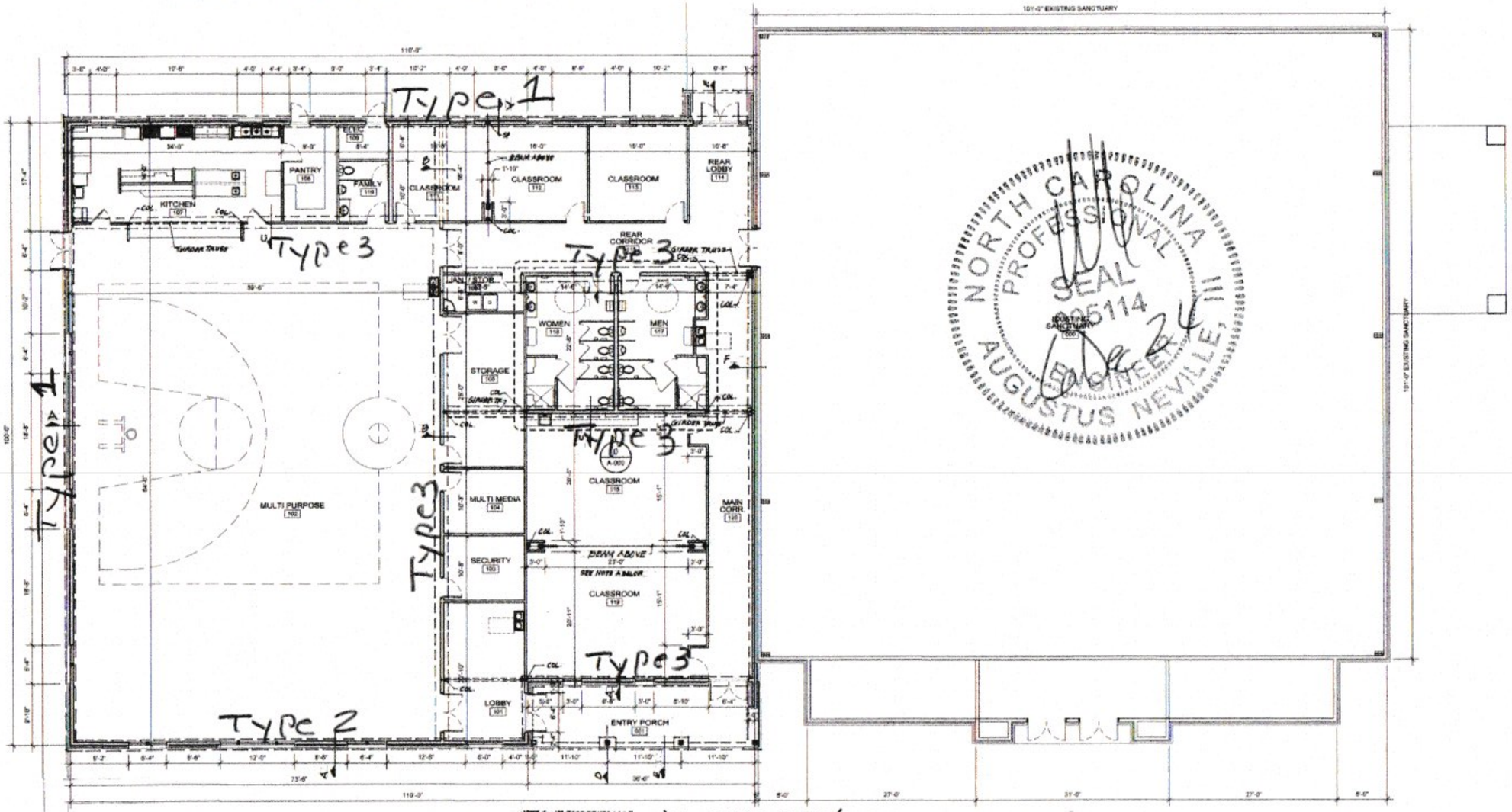

NOTE A - AN ROOF TRUSS LOAD ALLOWED ON FOLDING PARTITION BEAM.

NOTE B - WHERE COLS ARE WIDER THAN STUD WALL, PLACE OUT FRAMING AND DRYWALL TO ENCAPSULATE.

'FOOTING PLAN'
OVERALL FLOOR PLAN
SCALE: 1/8" = 1'-0"

ARCHITECT

RON W. WEBB
1659 W. HANRAHAN ROAD
AYDEN, NC. 28513
TEL: (252) 531-2711

Ministries Activity Center Addition
Mount Pisgah Harnett Original Free Will Baptist Church

145 Prospect Church Road
Erwin, NC.

PROJECT CONSULTANTS

KAIROS PROJECT GROUP, INC.
CONSULTING ENGINEERS
555 FAYETTEVILLE STREET | SUITE 201
RALEIGH, NC 27601 | 919-719-3475
WWW.KPGINC.COM | NC FIRM # C-3624

STRUCTURAL
NEVILLE ENGINEERING
AUGUSTUS NEVILLE, PE
100-B CULBRETH RD
CHAPEL HILL, NC 27516
TEL: (919) 740-3427

RON W. WEBB REGISTERED ARCHITECT 3114 NORTH CAROLINA GREENVILLE, NC

☒ For Construction
☐ Not for Construction
☒ Review Set
☐ Bid Set

All drawings and copies thereof are instruments of service and as such remain the property of Ron W. Webb Architect. They are to be used only with respect to this project. With the exception of one complete set for each party to the contract, all copies are to be returned or accounted for to Ron W. Webb Architect upon completion of the work. None of these drawings may be reproduced without the express written consent of Ron W. Webb Architect. These plans are copyrighted and are subject to copyright protection as an "Architectural Work" under Sec. 102 of the Copyright Act, 17 U.S.C. as amended December 1990 and known as Architectural Works Copyright Protection Act of 1990.
© COPYRIGHT 2020

Issue Date: 09/20/2023
Plot Date:
Revisions

Mark	Date	Description

·FOOTING PLAN·

Drawing No

OVERALL FLOOR PLAN **A-2**

GENERAL MECHANICAL SYMBOLS

- REVISION NUMBER - SHOWN ON PLANS
- POINT WHERE NEW CONNECTS TO EXISTING
- NUMBER OF DETAIL ON SHEET
- NUMBER OF SHEET WHERE DETAIL APPEARS
- KEYNOTE
- CONTINUATION SYMBOL
- Room 4 — ROOM NAME AND NUMBER
- ITEM TO BE DEMOLISHED
- AREA NOT IN CONTRACT
- 2" — PIPE SIZE TAG (DIAMETER)
- ABOVE GROUND PIPING
- 1/8" / 12" SLOPE — PIPE SLOPE TAG
- BELOW GROUND PIPING
- INVERT: -105' - 1" — PIPE INVERT ELEVATION TAG
- (E) — EXISTING PIPE TAG
- PIPING BEING DEMOLISHED

ABBREVIATIONS

Ø	ROUND	LVR	LOUVER
ABV	ABOVE	LWT	LEAVING WATER TEMPERATURE
AC	AIR CONDITIONING	M/A	MIXED AIR
AD	AREA DRAIN	MAX	MAXIMUM
ADD	ADDENDUM	MBH	ONE THOUSAND BTU PER HOUR
AFF	ABOVE FINISHED FLOOR	MCF	ONE THOUSAND CUBIC FEET
AFUE	ANNUAL FUEL UTILIZATION EFFICIENCY	MD	MOTORIZED DAMPER
ALT	ALTERNATE	MECH	MECHANICAL
AP	ACCESS PANEL	MFR	MANUFACTURER
ARCH	ARCHITECT/ARCHITECTURAL	MIN	MINIMUM
BFF	BELOW FINISHED FLOOR	MISC	MISCELLANEOUS
BLW	BELOW	MTR	MOTOR
BTU	BRITISH THERMAL UNITS	MU/A	MAKE-UP/AIR
BTUH	BRITISH THERMAL UNITS PER HOUR	NC	NOISE CRITERIA
CAP	CAPACITY	NC	NORMALLY CLOSED
CB	CATCH BASIN	NIC	NOT IN CONTRACT
CFM	CUBIC FEET PER MINUTE	NO	NUMBER
CLG	CEILING	NO	NORMALLY OPEN
CO	CLEAN OUT	NTS	NOT TO SCALE
CW	COLD WATER	O	OXYGEN
D	DEGREE	O/A	OUTSIDE AIR
DB	DRY BULB	ORD	OVERFLOW ROOF DRAIN
DIA	DIAMETER	PD	PRESSURE DROP
DN	DOWN	PIV	POST INDICATOR VALVE
DW	DISTILLED WATER	PLBG	PLUMBING
EA	EACH	PRESS	PRESSURE
EAT	ENTERING AIR TEMPERATURE	PRV	PRESSURE REDUCING VALVE
ELEC	ELECTRICAL	PSI	POUNDS PER SQUARE INCH
EQUIP	EQUIPMENT	PSIG	POUNDS PER SQUARE INCH GAUGE
EWC	ELECTRIC WATER COOLER	PWR	POWER
EWT	ENTERING WATER TEMPERATURE	R	DUCT RISER
E/A	EXHAUST AIR	R/A	RETURN AIR
EXIST	EXISTING	RCP	RADIANT CEILING PANEL
F	DEGREES FAHRENHEIT	RD	ROOF DRAIN
FCO	FLOOR CLEAN OUT	REC	RECESSED
FD	FLOOR DRAIN	RED	REDUCER
FDC	FIRE DEPARTMENT CONNECTION	RH	RELATIVE HUMIDITY
FL	FLOOR	RL/A	RELIEF AIR
FO	FUEL OIL	RM	ROOM
FOV	FUEL OIL VENT	RPM	REVOLUTIONS PER MINUTE
FOR	FUEL OIL RETURN	RW	RAIN WATER
FOS	FUEL OIL SUPPLY	SF	SQUARE FOOT
FPM	FEET PER MINUTE	S/A	SUPPLY AIR
FS	FLOOR SINK	SAN	SANITARY
FT	FOOT/FEET	SF	SQUARE FOOT
FTR	FIN TUBE RADIATION	SD	SMOKE DAMPER
GAL	GALLON	SM	SURFACE MOUNT
GF	GAS-FIRED	SP	STANDPIPE
GC	GENERAL CONTRACTOR	SP	STATIC PRESSURE
GPM	GALLONS PER MINUTE	STM	STEAM
GW	GREASE WASTE	T	THERMOSTAT
HB	HOSE BIB	TD	TEMPERATURE DROP
HP	HORSE POWER	TDR	TRENCH DRAIN
HTG	HEATING	TEMP	TEMPERATURE
HTR	HEATER	TYP	TYPICAL
HW	HOT WATER	UG	UNDERGROUND
HYD	HYDRANT	VAC	VACUUM
ID	INDIRECT	V	VENT
IN	INCH	VAV	VARIABLE AIR VOLUME
INV	INVERT	VENT	VENTILATION
LB	POUND	VTR	VENT THROUGH ROOF
LB/HR	POUNDS PER HOUR	W	WASTE
LAT	LEAVING AIR TEMPERATURE	WB	WET BULB
LP	LOW PRESSURE	WCO	WALL CLEAN OUT
LPG	LIQUEFIED PETROLEUM GAS	WH	WALL HYDRANT

EQUIPMENT ABBREVIATIONS

AC	AIR CONDITIONING UNIT	ET	EXPANSION TANK
ACCU	AIR COOLING CONDENSING UNIT	EWH	ELECTRIC WATER HEATER
AHU	AIR HANDLING UNIT	FCU	FAN COIL UNIT
AS	AIR SEPARATOR	FP	FIRE PUMP
B	BOILER	GI	GREASE INTERCEPTOR
CH	CHILLER	GRV	GRAVITY ROOF VENTILATOR
CT	COOLING TOWER	HWP	HEATING WATER PUMP
CUH	CABINET UNIT HEATER	HRU	HEAT RECOVERY UNIT
CHWP	CHILLED WATER PUMP	PRV	POWER ROOF VENTILATOR
DBP	DOMESTIC WATER BOOSTER PUMP	RE	RETURN/EXHAUST FAN
DC	DUCT MOUNTED COIL	RTU	ROOFTOP UNIT
DCP	DOMESTIC WATER CIRCULATING PUMP	SP	SUMP PUMP
EF	EXHAUST FAN	UH	UNIT HEATER
EDC	ELECTRIC DUCT COIL	WH	WATER HEATER

PLUMBING AND PIPING SYMBOLS

CHWR	CHILLED WATER RETURN
CHWS	CHILLED WATER SUPPLY
CD	CONDENSATE DRAINAGE
CWR	CONDENSER WATER RETURN
CWS	CONDENSER WATER SUPPLY
GWR	GEOTHERMAL WATER RETURN
GWS	GEOTHERMAL WATER SUPPLY
HWR	HEATING WATER RETURN
HWS	HEATING WATER SUPPLY
G	NATURAL GAS
PG	PROPANE GAS
REF-L	REFRIGERANT-LIQUID
REF-S	REFRIGERANT-SUCTION
REF-HG	REFRIGERANT-HOT GAS
STM	STEAM
CDR	CONDENSATE RETURN
CWV	COMBINATION WASTE & VENT
CA	COMPRESSED AIR
CW	DOMESTIC COLD WATER
H-CW	HARD COLD WATER
S-CW	SOFT COLD WATER
F-CW	FILTERED COLD WATER
RO	REVERSE OSMOSIS WATER
HW	HOT WATER
HW 140°	HOT WATER 140°
HW-R	HOT WATER RECIRCULATION
HW-R 140°	HOT WATER RECIRCULATION 140°
GV	GREASE VENT
GW	GREASE WASTE
IW	INDIRECT WASTE
OV	OIL VENT
OW	OIL WASTE
PD	PUMP DISCHARGE
V	SANITARY VENT
SS	SANITARY SEWER
SHWR	SOLAR HOT WATER RETURN
SHWS	SOLAR HOT WATER SUPPLY
SD	STORM DRAINAGE
OSD	OVERFLOW STORM DRAINAGE

PIPE DROP, PIPE RISE, PIPE TEE, CAP, 4", 2", 4", PLUG, REDUCING 45 DEGREE TEE, 45 DEGREE TEE

PIPE ACCESSORY TAGS

- 4" FCO — CLEANOUT
- 2" BACKWATER — SWING CHECK
- 2" CHECK — CHECK VALVE
- (ALTERNATE CHECK VALVE SYMBOL)
- 2" BALANCE — BALANCING VALVE
- 2" CIRC — CIRCUIT SETTER
- T/P 1" RECIRC — RECIRC. VALVE
- 2" GATE — GATE VALVE
- 2" QUICK — QUICK OPENING
- 2" SHUTOFF — BALL VALVE
- 2" STRAINER
- TP 1/2" PRIMER — TRAP PRIMER
- M 2" M-CNTRL — ELEC. CONTROL
- T/P TMV-XX — THERMOSTATIC MIXING
- EM 1/2" TMV — EMERG. THERMOSTATIC
- 2" PRV — PRESS REDUCING
- W 2" DOM. WM — DOM. WATER METER
- IR 1 1/2" DOM. WM — IRRIGATION WATER METER
- S 1" GAS-CNTRL — EMERG. GAS SHUTOFF
- 1" PLUG — PLUG VALVE
- 1" GAS COCK — GAS SHUTOFF COCK
- 1" REG — PRESS REGULATOR
- DOUBLE CHECK VALVE
- REDUCED PRESSURE ZONE

DRAIN TAGS

DRAIN SIZE

- FLOOR DRAIN — 4" FD-1 — TYPE (SEE SCHEDULE)
- TRAP PRIMER — 4" FD-3P — "P" - INDICATES PRIMER CONNECTION
- DEEP TRAP — 4" FD-3 — 8 DFU — FIXTURE UNITS
- INTEGRAL CLEANOUT
- HUB DRAIN — 4" FD-14
- FLOOR SINK — 4" FS-4
- 4" AD-2 — AREA DRAIN NO TRAP
- 4" SD-29 — DECK DRAIN
- 4" SD-12 — FLOW CONTROL DRAIN
- 4" SD-15 — STORM DRAIN
- ROOF AREA SERVED BY DRAIN — 6" SD-1 — 4000 SF — COMBINATION DRAINS

PLUMBING FIXTURE TAGS

TYPE (SEE SCHEDULE)

FIXTURE UNITS

WATER CLOSET - WALL HUNG - ADA

PIPE ACCESORY TAG

WC-1A, WC-1, U-1, 4" WCO, 4" WCO

* NOTE *

ALL OF GENERAL NOTES ON THIS SHEET ARE TO BE APPLIED TO ALL OTHER DRAWINGS IN THIS SET.THE SYMBOLS AND ABBREVIATIONS SHOWN ON THIS SHEET MAY OR MAY NOT BE USED IN THIS SET OF DRAWINGS.

PLUMBING NOTES

A. ALL WORK SHALL BE DONE IN ACCORDANCE WITH THE LATEST EDITION OF THE STATE CODE AS WELL AS ALL LOCAL AND OTHER APPLICABLE CODES.

B. ALL WORK SHALL BE PERFORMED BY EXPERIENCED AND SKILLED CRAFTSMEN.

C. FIELD VERIFY ALL NEW WATER, WASTE, AND VENT PIPING CONNECTIONS AND PROVIDE NEW CONNECTIONS AS REQUIRED FOR PROPERLY OPERATING SYSTEMS.

D. FIELD VERIFY LOCATION AND INVERTS OF SITE UTILITIES PRIOR TO INSTALLATION.

E. ROUTE DOMESTIC WATER, FIRE PROTECTION, SANITARY SEWER, AND STORM SEWER SERVICES TO SITE UTILITIES 5'-0" FROM BUILDING UNLESS NOTED OTHERWISE. REFER TO CIVIL PLANS.

F. WASTE AND VENT PIPING BELOW FLOOR AND THROUGH FLOOR SHALL BE 2" MINIMUM.

G. PROVIDE CLEANOUT IN ACCESSIBLE LOCATION AT THE BASE OF ALL PLUMBING RISERS.

H. WATER LINES BELOW GRADE SHALL BE TYPE "K" COPPER (NO JOINTS BELOW GRADE) AND ABOVE GRADE TYPE "L". SUPPORT AS REQUIRED AND SHALL BE HYDROSTATICALLY TESTED FOR TWO HOURS AT 100 PSIG. ALL WATER PIPING AT WATER FIXTURES SHALL BE PROVIDED WITH 18" AIR CHAMBERS OR SHOCK ARRESTORS. STOPS SHALL BE PROVIDED ON HOT AND COLD-WATER LINES. WATER PIPING SHALL BE INSULATED WITH 1" CLOSED CELL RUBBER. THE ENTIRE WATER SYSTEM SHALL BE DISINFECTED PRIOR TO PLACING INTO SERVICE. PEX/PVC MAY NOT BE SUBSTITUTED FOR THE COPPER FOR DOMESTIC WATER PIPING.

I. SANITARY SEWER LINES SHALL BE PVC AND SLOPED TOWARD DRAINAGE DIRECTION AT A MINIMUM OF 1/4" PER FOOT FOR 2-1/2" AND SMALLER PIPING. SLOPE SHALL BE 1/8" PER FOOT FOR PIPING SIZES 3" - 6".

J. WHERE APPLICABLE, ANY DEVICE THAT SHALL SERVE A SPECIAL FUNCTION SUCH AS PROCESSING OR ICE STORAGE, AND CONNECTS TO WATER SUPPLY AND DRAIN, SHALL BE PROTECTED AGAINST BACKFLOW WITH APPROVED BACKFLOW PREVENTION DEVICE.

K. PROVIDE PRESSURE REDUCING VALVE IF STREET PRESSURE EXCEEDS 80 PSIG.

L. SHOULD WATER PRESSURE BE TOO LOW TO PROPERLY CYCLE FLUSH VALVE FIXTURES, A BOOSTER PUMP SHALL BE REQUIRED. SUFFICIENT WATER PRESSURE IS ASSUMED FOR PROPER PLUMBING OPERATION.

M. THE PLUMBING CONTRACTOR SHALL PROVIDE ALL OPENINGS REQUIRED FOR THE PLUMBING WORK AND SHALL INSTALL FIRE RATED SLEEVES WHEREVER PENETRATIONS OF RATED WALLS OR FLOORS ARE MADE. THE PATCHING SHALL BE BY THE PLUMBING CONTRACTOR. THE PLUMBING CONTRACTOR SHALL REVIEW ALL UTILITY SITE PLANS AND ARCHITECTURAL SITE PLANS FOR WORK BY OTHERS.

N. LOCATION OF UTILITIES (WASTE AND WATER LINES, MANHOLES, ETC...) THAT ARE TO BE CONNECTED TO ARE ASSUMED. IT SHALL BE THE RESPONSIBILITY OF THE PLUMBING CONTRACTOR TO VERIFY THESE LOCATIONS AND MAKE THE FINAL CONNECTION AS REQUIRED.

O. ALL FLOOR DRAINS AND TRENCH DRAINS, IF APPLICABLE, SHALL BE PROVIDED WITH TRAP PRIMERS.

PLUMBING SHEET INDEX

P000	PLUMBING TITLE SHEET
P100	PLUMBING DOMESTIC WATER PLAN
P101	PLUMBING SANITARY PLAN
P200	PLUMBING DETAILS AND SCHEDULES

ARCHITECT

RON W. WEBB
1659 W. HANRAHAN ROAD
AYDEN, NC. 28513
TEL: (252) 531-2711

WEBB MT PISGAH

145 PROSPECT CHURCH RD
ERWIN, NC 28339

PROJECT CONSULTANTS

KAIROS PROJECT GROUP, INC.
120 SOMMERVILLE PARK ROAD
RALEIGH, NC 27603
NC FIRM # C-3824

NORTH CAROLINA PROFESSIONAL SEAL 33293 ENGINEER BENJAMIN D. LEWIS

12/09/2024

- [x] For Construction
- [ ] Not for Construction
- [ ] Review Set
- [x] Bid Set

All drawings and copies thereof are instruments of service and as such remain the property of Ron W. Webb Architect They are to be used only with respect to this project. With the exception of one complete set for each party to the contract, all copies are to be returned or accounted for to Ron W. Webb Architect upon completion of the work. None or part of these drawings may be reproduced without the express written consent of Ron W. Webb Architect. These plans are copyrighted and are subject to copyright protection as an "Architectural Work" under Sec. 102 of the Copyright Act, 17 U.S.O. as amended December 1990 and known as Architectural Works Copyright Protection Act of 1990
© COPYRIGHT 2020

Issue Date: Issue Date
Plot Date: 10/23/2023 4:27:27 PM

Revisions

Mark	Date	Description

Drawing No.

PLUMBING TITLE SHEET

P000

of

PLUMBING SHEET SCHEDULE

A	CONTRACTOR TO LOCATE EXISTING WATER PIPING AND CONNECT NEW WATER PIPING INTO EXISTING WATER PIPING.
B	SEE RISER DIAGRAMS FOR PIPE SIZING.

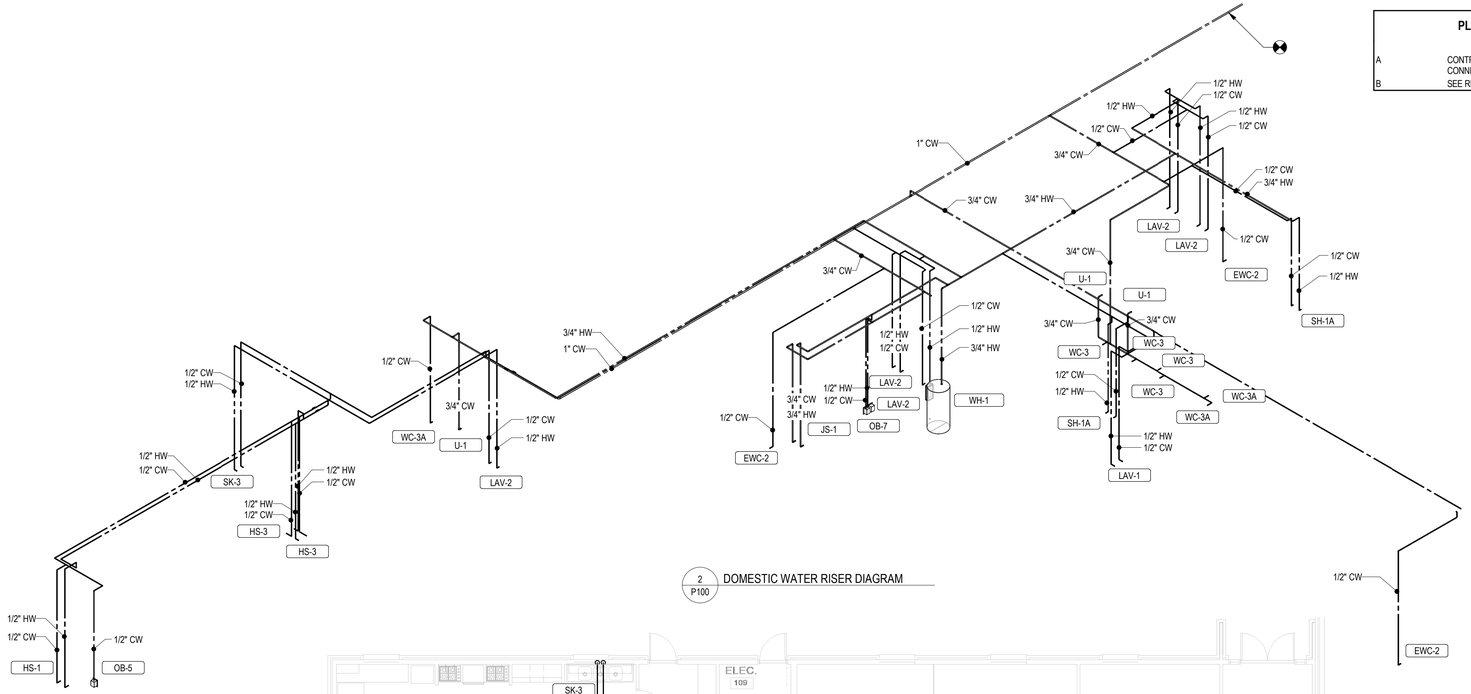

2 P100 DOMESTIC WATER RISER DIAGRAM

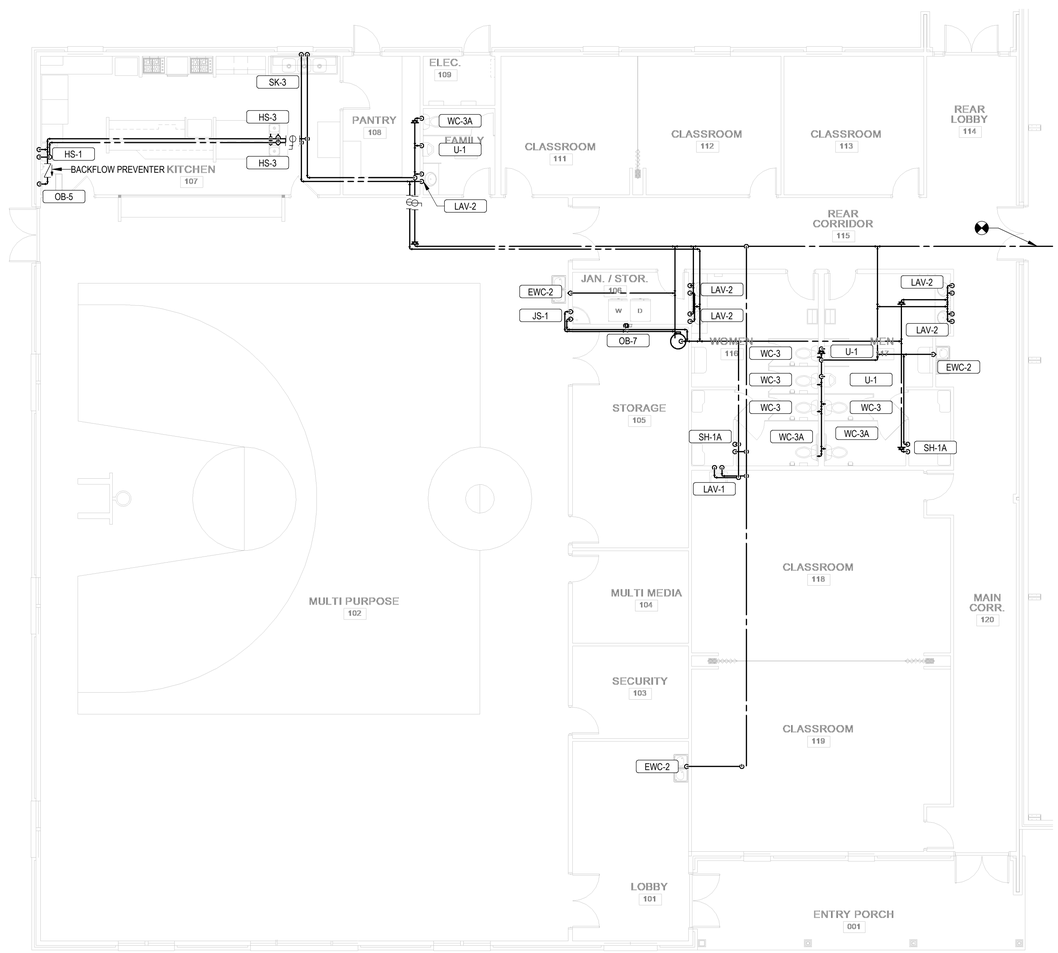

1 P100 LEVEL 1 PLUMBING PLAN
1/8" = 1'-0"

ARCHITECT

RON W. WEBB
1659 W. HANRAHAN ROAD
AYDEN, NC. 28513
TEL: (252) 531-2711

WEBB MT PISGAH

145 PROSPECT CHURCH RD
ERWIN, NC 28339

PROJECT CONSULTANTS

KAIROS PROJECT GROUP, INC.
120 SOMMERVILLE PARK ROAD
RALEIGH, NC 27603
NC FIRM # C-3824

NORTH CAROLINA PROFESSIONAL SEAL 33293 ENGINEER BENJAMIN D. LEWIS

12/09/2024

- [x] For Construction
- [ ] Not for Construction
- [ ] Review Set
- [x] Bid Set

All drawings and copies thereof are instruments of service and as such remain the property of Ron W. Webb Architect They are to be used only with respect to this project. With the exception of one complete set for each party to the contract, all copies are to be returned or accounted for to Ron W. Webb Architect upon completion of the work. None or part of these drawings may be reproduced without the express written consent of Ron W. Webb Architect. These plans are copyrighted and are subject to copyright protection as an "Architectural Work" under Sec. 102 of the Copyright Act, 17 U.S.O. as amended December 1990 and known as Architectural Works Copyright Protection Act of 1990
© COPYRIGHT 2020

Issue Date: Issue Date
Plot Date: 10/23/2023 4:27:30 PM

Revisions

Mark	Date	Description

Drawing No.
PLUMBING DOMESTIC WATER PLAN

P100

of

PLUMBING SHEET NOTES

A CONTRACTOR TO LOCATE EXISTING 4" SANITARY PIPING. CONTRACTOR SHALL CONNECT NEW SANITARY PIPING INTO EXISTING SANITARY PIPING WHILE MAINTAINING SLOP TO KEEP SANITARY SYSTEM FULLY FUNCTIONAL.

B SEE RISER DIAGRAMS FOR PIPE SIZING.

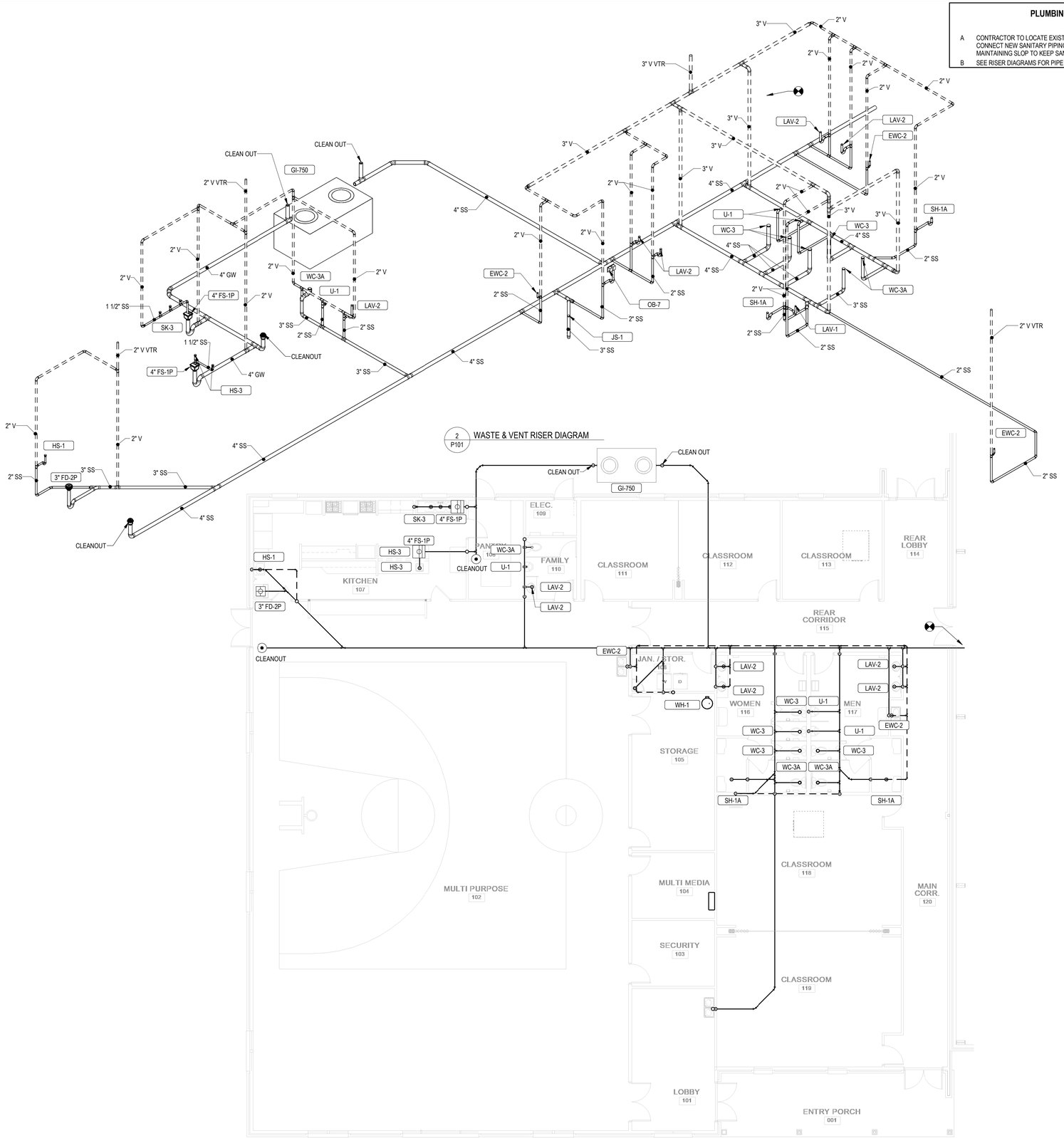

2 P101 WASTE & VENT RISER DIAGRAM

1 P101 LEVEL 1 PLUMBING PLAN
1/8" = 1'-0"

ARCHITECT

RON W. WEBB
1659 W. HANRAHAN ROAD
AYDEN, NC. 28513
TEL: (252) 531-2711

WEBB MT PISGAH

145 PROSPECT CHURCH RD
ERWIN, NC 28339

PROJECT CONSULTANTS

KAIROS PROJECT GROUP, INC.
120 SOMMERVILLE PARK ROAD
RALEIGH, NC 27603
NC FIRM # C-3824

NORTH CAROLINA PROFESSIONAL SEAL 33293 ENGINEER BENJAMIN D. LEWIS

12/09/2024

- [x] For Construction
- [ ] Not for Construction
- [ ] Review Set
- [x] Bid Set

All drawings and copies thereof are instruments of service and as such remain the property of Ron W. Webb Architect They are to be used only with respect to this project. With the exception of one complete set for each party to the contract, all copies are to be returned or accounted for to Ron W. Webb Architect upon completion of the work. None or part of these drawings may be reproduced without the express written consent of Ron W. Webb Architect. These plans are copyrighted and are subject to copyright protection as an "Architectural Work" under Sec. 102 of the Copyright Act, 17 U.S.O. as amended December 1990 and known as Architectural Works Copyright Protection Act of 1990
© COPYRIGHT 2020

Issue Date: Issue Date

Plot Date: 10/23/2023 4:27:33 PM

Revisions

Mark	Date	Description

Drawing No.

PLUMBING SANITARY PLAN

P101

of

DOMESTIC FIXTURE SCHEDULE

ID	DESCRIPTION	MANUFACTURER	MODEL	QTY	MATERIAL DESCRIPTION	FINISH	TRIM MANUFACTURER	TRIM MODEL	TRIM TYPE	TRIM MOTION SENSOR CONTROL	FLOW FIXTURE WATER FLOW	FLOW FIXTURE TIMER DURATION (SEC)	FLOW FIXTURE CWT	FLOW FIXTURE HWT	FLOW FIXTURE MAX. MWT	FLUSH FIXTURE VOL. PER FLUSH	FLUSH FIXTURE MIN. VOL. PER FLUSH	WASTE ROUGH-IN PIPE SIZE	INDIRECT WASTE PIPE SIZE	VENT PIPE SIZE	COLD WATER ROUGH-IN PIPE SIZE	HOT WATER ROUGH-IN PIPE SIZE	SPECIFICATION	REMARKS
EWC-2	WATER COOLER - DUAL HEIGHT	ELKAY	EZSTL8WSSK	3	GALVANIZED STEEL	STAINLESS STEEL CABINET				No	0.1 GPM	15	40 °F		40 °F			2"		1 1/2"	1/2"		TWO LEVEL WALL HUNG WATER COOLER WITH BOTTLE FILLING STATION. THE UNIT SHALL BE COMPLETE WITH CABINET, MOUNTING FRAME, SELF CLOSING EASY TOUCH SIDE AND FRONT PUSHBAR CONTROLS, FLEXIGUARD SAFETY BUBBLER, REFRIGERATING SYSTEM, AIR COOLED, 120 VOLT, 60 CYCLE, SINGLE PHASE POWER CONNECTION, FULLY AUTOMATIC, COMPLETE AND READY TO OPERATE.	
HS-1	HAND SINK	ELKAY	EHS-18X	1	STAINLESS STEEL	STAINLESS STEEL	ELKAY	INCLUDED	MANUAL	No	0.5 GPM	0	40 °F	120 °F	105 °F			2"		1 1/2"	1/2"	1/2"	SINGLE COMPARTMENT, WALL HUNG, 18 GAUGE, WITH STRAINER AND FAUCET INCLUDED, P-TRAP, TAILPIECES, SUPPLIES AND STOPS. PROVIDE WITH HAWS MODEL NO. 7620 FAUCET MOUNTED EYEWASH AXION EYEPOD.	
HS-3	HAND SINK	ELKAY	D11515	2	STAINLESS STEEL	STAINLESS STEEL	ELKAY	LKD24898BHC	MANUAL	No	0.5 GPM	0	40 °F	120 °F	105 °F			2"		1 1/2"	1/2"	1/2"	DAYTON STAINLESS STEEL 15" X 15" X 5-3/16", SINGLE BOWL DROP-IN BAR SINK. SINK IS MANUFACTURED FROM 23 GAUGE 300 SERIES STAINLESS STEEL WITH A SATIN FINISH, CENTER DRAIN PLACEMENT, AND BOTTOM ONLY PADS	
JS-1	JANITOR SINK	FIAT	MSB-2424	1	MOLDED STONE		CHICAGO FAUCET CO	897-CP	MANUAL	No	2.5 GPM	0	40 °F	120 °F	105 °F			3"		2"	3/4"	3/4"	SERVICE BASIN WITH CAP ON TWO SIDES, WITH CHROME PLATED 3" DRAIN AND CAST IRON TRAP. FAUCET SHALL INCLUDE PAIL HOOK AND ATMOSPHERIC VACUUM BREAKER SPOUT. FURNISH 5'-0" LENGTH OF 5-PLY GARDEN HOSE AND FITTINGS.	
LAV-1	LAVATORY - WALL HUNG	AMERICAN STANDARD	LUCERNE	1	WHITE VITREOUS CHINA	WHITE	CHICAGO FAUCET CO	116.976.AB.1	ELECTRONIC	Yes	0.5 GPM	12	40 °F	120 °F	105 °F			2"		1 1/2"	1/2"	1/2"	WALL HUNG LAVATORY WITH BACKSPLASH, FAUCET HOLES ON 4" CENTERS. DECK-MOUNTED FAUCET WITH SENSOR, WATER TURBINE POWER WITH VANDAL RESISTANT SPRAY, EXTERNAL ASSE 1070 COMPLIANT THERMOSTATIC MIXING VALVE, GRID DRAIN, LOOSE KEY ANGLE STOPS AND SUPPLIES. INSULATE WATER AND WASTE WITH INSULATION KIT.	
LAV-2	LAVATORY - COUNTER	AMERICAN STANDARD	CADET	5	WHITE VITREOUS CHINA	WHITE	CHICAGO FAUCET CO	116.976.AB.1	ELECTRONIC	Yes	0.5 GPM	12	40 °F	120 °F	105 °F			2"		1 1/2"	1/2"	1/2"	COUNTERTOP LAVATORY, SELF-RIMMING, FAUCET HOLES ON 4" CENTERS. DECK-MOUNTED FAUCET SENSOR, WATER TURBINE POWER WITH VANDAL RESISTANT SPRAY, EXTERNAL ASSE 1070 COMPLIANT THERMOSTATIC MIXING VALVE, GRID DRAIN, LOOSE KEY ANGLE STOPS AND SUPPLIES. INSULATE WATER AND WASTE WITH INSULATION KIT.	
OB-5	ICE MAKER OUTLET BOX	SIOUX CHIEF	696-RG1010MF	1	ABS PLASTIC	WHITE				No	0.5 GPM	0	40 °F	120 °F	105 °F						1/2"		FULLY RECESSED FIRE RATED ICE MAKER SUPPLY BOX WITH COVER. PROVIDE 1/4 TURN BALL VALVES AND WATER HAMMER ARRESTORS IN BOX.	
OB-7	WASHING MACHINE OUTLET BOX	SIOUX CHIEF	696-RG2303WF	1	ABS PLASTIC	WHITE				No	0.5 GPM	0	40 °F	120 °F	105 °F			2"		2"	1/2"	1/2"	FULLY RECESSED FIRE RATED WASHING MACHINE SUPPLY BOX WITH COVER. PROVIDE 1/4 TURN BALL VALVES AND WATER HAMMER ARRESTORS IN BOX. PROVIDE A 2" TRAPPED STANDPIPE IN CONCEALED WALL SPACE.	
SH-1A	SHOWER STALL - ADA	BY OTHERS	BY OTHERS	2			SYMMONS	C-96-500-B30-V	MANUAL	No	1.0 GPM	300	40 °F	120 °F	105 °F			2"		1 1/2"	1/2"	1/2"	THE INDIVIDUAL SHOWER STALL IS SPECIFIED IN ANOTHER DIVISION. PROVIDE A SHOWER DRAIN AS SPECIFIED IN "SOIL, WASTE AND VENT PIPING SYSTEMS." SHOWER SYSTEM WITH ASSE 1016 COMPLIANT TYPE "TP" THERMOSTATIC/PRESSURE BALANCING COMBINATION VALVE WITH ADJUSTABLE STOP SCREW TO LIMIT HANDLE TURN. CONCEALED 3-PORT DIVERTER VALVE WITH LEVER HANDLE WITH ARM AND FLANGE, INTEGRAL STOPS, AND IN-LINE VACUUM BREAKER. HAND SHOWER SYSTEM WITH STANDARD HAND SHOWER, 60" FLEXIBLE METAL HOSE, AND 48" SLIDE BAR FOR HAND SHOWER MOUNTING. PROVIDE MANUFACTURER'S FLOW RATE RESTRICTOR ON SHOWERHEAD.	
U-1	URINAL	AMERICAN STANDARD	WASHBROOK	3	WHITE VITREOUS CHINA	WHITE	SLOAN	8186	BATTERY	Yes			40 °F		40 °F	0.125 gal	0.125 gal	2"		1 1/2"	3/4"		WALL HUNG URINAL WITH WASHOUT ACTION, TOP SPUD, SIZE 18" WITH INTEGRAL EXTENDED SHIELDS SUPPORTED BY THROUGH GOING BOLTS AND C.P. NUTS. SOLAR POWERED SENSOR ACTIVATED FLUSHOMETER.	
WC-3	WATER CLOSET - FLOOR - TANK TYPE	AMERICAN STANDARD	CADET	4	WHITE VITREOUS CHINA	WHITE	TANK TYPE			No			40 °F		40 °F	1.28 gal	1.28 gal	4"		2"	1/2"		ELONGATED FLOOR MOUNTED TANK TYPE WATER CLOSET, WITH CHURCH 295CT ELONGATED OPEN FRONT SEAT. PROVIDE A 1/4" BRASS BALL VALVE AT WALL CONNECTION.	
WC-3A	WATER CLOSET - FLOOR - PRESSURE ASSISTED TANK TYPE - ADA	AMERICAN STANDARD	CADET RIGHT HEIGHT	3	WHITE VITREOUS CHINA	WHITE	AMERICAN STANDARD	2467.016	MANUAL	No			40 °F		40 °F	1.6 gal	1.6 gal	3"		2"	1/2"		ELONGATED FLOOR MOUNTED PRESSURE ASSISTED TANK TYPE WATER CLOSET, WITH CHURCH 295CT ELONGATED OPEN FRONT SEAT. PROVIDE A 1/4" BRASS BALL VALVE AT WALL CONNECTION. INSTALL AT ADA COMPLIANT HEIGHT.	

Grand total: 27

GREASE INTERCEPTOR SIZING PROCEDURE FOR KITCHEN FIXTURES

FIXTURE TYPE	QUANTITY	PIPE DIAMETER	GPM/FIXTURE	FIXTURE RATING	GPM
Pot sink (3 comp)	1	1 1/2	13	1.00	13
Meat & Vegetable prep sink	2	1 1/2	13	0.10	2.6
Pre-rinse sink					0
Wok					0
Other					0
Dishwasher					8
Can wash / Mop sink					0
Total					**23.6**
Grease Interceptor Size = flow rate x 30 minutes =					**708**

Please round up to the next available size to deteremine the required grease interceptor.

ELECTRIC WATER HEATER SCHEDULE

ID	LOCATION NAME	LOCATION NO.	MANUFACTURER	MODEL NO.	TYPE	ELECTRIC HEAT EXCHANGER HEATING CAP	FLOW DESIGN	FLOW MIN	STORAGE RECOVERY	STORAGE VOL	MAX TEMP RISE	HEATING ELEMENT QTY	POWER	SCR	EF	ASME	UNIT WEIGHT	FLA	MCA	MOCP	VOLT	PH	REMARKS
WH-1	Space	235	AO SMITH	DEN-40	STORAGE	0.0 kW			0.0 gal/h	40.0 gal	80 °F	2	0.0 kW	Yes	0.9	Yes	447 lb	8.3 A	10.4 A	15.0 A	208 V	3	PROVIDE ASSE 1017 COMPLIANT MIXING VALVE; POWERS SERIES LFSH OR EQUAL.

GREASE INTERCEPTOR SCHEDULE

ID TYPE	MANUFACTURER	MODEL	QTY	TYPE	MATERIAL DESCRIPTION	COVER DESCRIPTION	COVER DIA	DESIGN FLOW	CAPACITY LIQUID	CAPACITY SOLIDS	INSTALLATION ARRANGEMENT	PIPE CONNECTIONS INLET DIA	PIPE CONNECTIONS OUTLET INVERT	PIPE CONNECTIONS OUTLET DIA	DIMENSIONS LENGTH	DIMENSIONS WIDTH	DIMENSIONS HEIGHT	REMARKS
GI-750	MIFAB	SUPER-750	1	GRAVITY	HIGH DENSITIY POLYETHYLENE	CAST IRON	2' - 0"	250.0 GPM	750.0 gal	77.0 gal	ABOVE GRADE	4"	-3"	4"	9' - 3"	5' - 4"	4' - 5 5/8"	

Grand total: 1

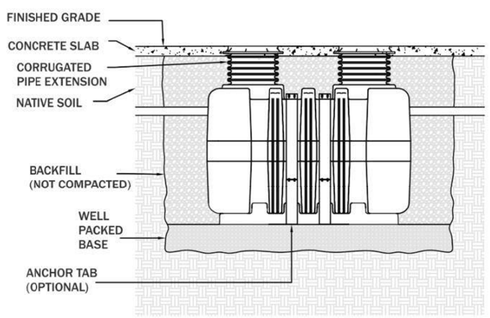

4 P200 GREASE INTERCEPTOR DETAIL
NOT TO SCALE

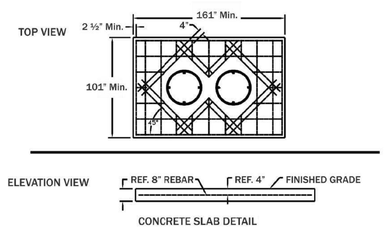

WATER SUPPLY FIXTURE UNIT SUMMARY

ID	FIXTURE DESCRIPTION	QTY	PIPE SIZE CW	PIPE SIZE HW	DFU DEMAND UNIT	DFU DEMAND TOTAL	CWFU DEMAND UNIT	CWFU DEMAND TOTAL	HWFU DEMAND UNIT	HWFU DEMAND TOTAL	WSFU DEMAND UNIT	WSFU DEMAND TOTAL
EWC-2	WATER COOLER - DUAL HEIGHT	3	1/2"		0.5	1.5	0.5	1.5	0	0	0.5	1.5
HS-1	HAND SINK	1	1/2"	1/2"	2	2	1.125	1.125	1.125	1.125	1.5	1.5
HS-3	HAND SINK	2	1/2"	1/2"	2	4	1.125	2.25	1.125	2.25	1.5	3
JS-1	JANITOR SINK	1	3/4"	3/4"	3	3	2.25	2.25	2.25	2.25	3	3
LAV-1	LAVATORY - WALL HUNG	1	1/2"	1/2"	1	1	0.75	0.75	0.75	0.75	1	1
LAV-2	LAVATORY - COUNTER	5	1/2"	1/2"	1	5	0.75	3.75	0.75	3.75	1	5
OB-5	ICE MAKER OUTLET BOX	1	1/2"	1/2"	0	0	0.5	0.5	0	0	0.5	0.5
OB-7	WASHING MACHINE OUTLET BOX	1	1/2"	1/2"	3	3	3	3	3	3	4	4
SH-1A	SHOWER STALL - ADA	2	1/2"	1/2"	2	4	1.5	3	1.5	3	2	4
SK-3	3-COMPARTMENT SINK	1	1/2"	1/2"	4	4	1.5	1.5	1.5	1.5	2	2
U-1	URINAL	3	3/4"		2	6	4	12	0	0	4	12
WC-3	WATER CLOSET - FLOOR - TANK TYPE	4	1/2"		4	16	2.5	10	0	0	2.5	10
WC-3A	WATER CLOSET - FLOOR - PRESSURE ASSISTED TANK TYPE - ADA	3	1/2"		4	12	2.5	7.5	0	0	2.5	7.5
Grand total: 28						61.5		49.125		17.625		55

DRAINAGE FIXTURE UNIT SUMMARY

ID	FIXTURE DESCRIPTION	QTY	WASTE SIZE	DFU DEMAND UNIT	DFU DEMAND TOTAL
EWC-2	WATER COOLER - DUAL HEIGHT	3	1 1/4"	0.5	1.5
FD-2	FLOOR DRAIN	1	3"	6	6
FS-1	FLOOR SINK	2	4"	6	12
HS-1	HAND SINK	1	2"	2	2
HS-3	HAND SINK	2	2"	2	4
JS-1	JANITOR SINK	1	3"	3	3
LAV-1	LAVATORY - WALL HUNG	1	1 1/2"	1	1
LAV-2	LAVATORY - COUNTER	5	2"	1	5
OB-7	WASHING MACHINE OUTLET BOX	1	2"	3	3
SH-1A	SHOWER STALL - ADA	2	2"	2	4
SK-3	3-COMPARTMENT SINK	1	2"	4	4
U-1	URINAL	3	2"	2	6
WC-3	WATER CLOSET - FLOOR - TANK TYPE	4	4"	4	16
WC-3A	WATER CLOSET - FLOOR - PRESSURE ASSISTED TANK TYPE - ADA	3	3"	4	12
Grand total: 30					79.5

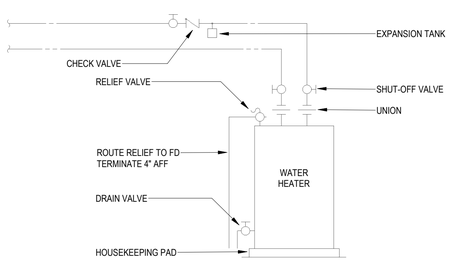

3 P200 WATER HEATER PIPING DETAIL - SINGLE
NOT TO SCALE

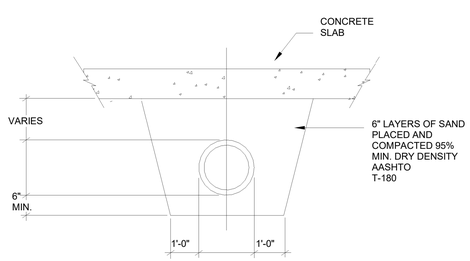

2 P200 TYPICAL PIPE UNDER SLAB DETAIL
NOT TO SCALE

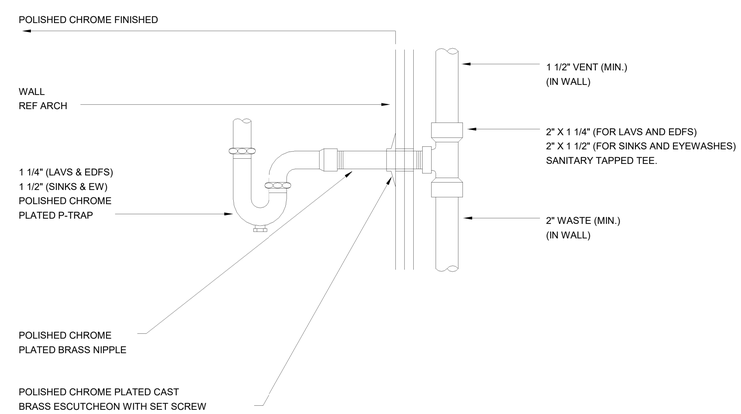

1 P200 TYPICAL DRAIN PIPING DETAIL
NOT TO SCALE

ARCHITECT

RON W. WEBB
1659 W. HANRAHAN ROAD
AYDEN, NC. 28513
TEL: (252) 531-2711

WEBB MT PISGAH

145 PROSPECT CHURCH RD
ERWIN, NC 28339

PROJECT CONSULTANTS

KAIROS PROJECT GROUP, INC.
120 SOMMERVILLE PARK ROAD
RALEIGH, NC 27603
NC FIRM # C-3824

NORTH CAROLINA PROFESSIONAL SEAL 33293 ENGINEER BENJAMIN D. SMITH
12/09/2024

☒ For Construction
☐ Not for Construction
☐ Review Set
☒ Bid Set

All drawings and copies thereof are instruments of service and as such remain the property of Ron W. Webb Architect They are to be used only with respect to this project. With the exception of one complete set for each party to the contract, all copies are to be returned or accounted for to Ron W. Webb Architect upon completion of the work. None or part of these drawings may be reproduced without the express written consent of Ron W. Webb Architect. These plans are copyrighted and are subject to copyright protection as an "Architectural Work" under Sec. 102 of the Copyright Act, 17 U.S.O. as amended December 1990 and known as Architectural Works Copyright Protection Act of 1990
© COPYRIGHT 2020

Issue Date: Issue Date
Plot Date: 10/23/2023 4:27:38 PM
Revisions

Mark	Date	Description

Drawing No.
PLUMBING DETAILS AND SCHEDULES
P200
of

GENERAL MECHANICAL SYMBOLS

- REVISION NUMBER - SHOWN ON PLANS
- POINT WHERE NEW CONNECTS TO EXISTING
- NUMBER OF DETAIL ON SHEET
- NUMBER OF SHEET WHERE DETAIL APPEARS
- KEYNOTE
- CONTINUATION SYMBOL
- Room 5 — ROOM NAME AND NUMBER
- ITEM TO BE DEMOLISHED
- AREA NOT IN CONTRACT
- 2" — PIPE SIZE TAG (DIAMETER)
- ABOVE GROUND PIPING
- 1/8" / 12" SLOPE — PIPE SLOPE TAG
- BELOW GROUND PIPING
- INVERT: -105' - 1" — PIPE INVERT ELEVATION TAG
- (E) — EXISTING PIPE TAG
- PIPING BEING DEMOLISHED

ABBREVIATIONS

Ø	ROUND	LVR	LOUVER
ABV	ABOVE	LWT	LEAVING WATER TEMPERATURE
AC	AIR CONDITIONING	M/A	MIXED AIR
AD	AREA DRAIN	MAX	MAXIMUM
ADD	ADDENDUM	MBH	ONE THOUSAND BTU PER HOUR
AFF	ABOVE FINISHED FLOOR	MCF	ONE THOUSAND CUBIC FEET
AFUE	ANNUAL FUEL UTILIZATION EFFICIENCY	MD	MOTORIZED DAMPER
ALT	ALTERNATE	MECH	MECHANICAL
AP	ACCESS PANEL	MFR	MANUFACTURER
ARCH	ARCHITECT/ARCHITECTURAL	MIN	MINIMUM
BFF	BELOW FINISHED FLOOR	MISC	MISCELLANEOUS
BLW	BELOW	MTR	MOTOR
BTU	BRITISH THERMAL UNITS	MU/A	MAKE-UP/AIR
BTUH	BRITISH THERMAL UNITS PER HOUR	NC	NOISE CRITERIA
CAP	CAPACITY	NC	NORMALLY CLOSED
CB	CATCH BASIN	NIC	NOT IN CONTRACT
CFM	CUBIC FEET PER MINUTE	NO	NUMBER
CLG	CEILING	NO	NORMALLY OPEN
CO	CLEAN OUT	NTS	NOT TO SCALE
CW	COLD WATER	O	OXYGEN
D	DEGREE	O/A	OUTSIDE AIR
DB	DRY BULB	ORD	OVERFLOW ROOF DRAIN
DIA	DIAMETER	PD	PRESSURE DROP
DN	DOWN	PIV	POST INDICATOR VALVE
DW	DISTILLED WATER	PLBG	PLUMBING
EA	EACH	PRESS	PRESSURE
EAT	ENTERING AIR TEMPERATURE	PRV	PRESSURE REDUCING VALVE
ELEC	ELECTRICAL	PSI	POUNDS PER SQUARE INCH
EQUIP	EQUIPMENT	PSIG	POUNDS PER SQUARE INCH GAUGE
EWC	ELECTRIC WATER COOLER	PWR	POWER
EWT	ENTERING WATER TEMPERATURE	R	DUCT RISER
E/A	EXHAUST AIR	R/A	RETURN AIR
EXIST	EXISTING	RCP	RADIANT CEILING PANEL
F	DEGREES FAHRENHEIT	RD	ROOF DRAIN
FCO	FLOOR CLEAN OUT	REC	RECESSED
FD	FLOOR DRAIN	RED	REDUCER
FDC	FIRE DEPARTMENT CONNECTION	RH	RELATIVE HUMIDITY
FL	FLOOR	RL/A	RELIEF AIR
FO	FUEL OIL	RM	ROOM
FOV	FUEL OIL VENT	RPM	REVOLUTIONS PER MINUTE
FOR	FUEL OIL RETURN	RW	RAIN WATER
FOS	FUEL OIL SUPPLY	SF	SQUARE FOOT
FPM	FEET PER MINUTE	S/A	SUPPLY AIR
FS	FLOOR SINK	SAN	SANITARY
FT	FOOT/FEET	SF	SQUARE FOOT
FTR	FIN TUBE RADIATION	SD	SMOKE DAMPER
GAL	GALLON	SM	SURFACE MOUNT
GF	GAS-FIRED	SP	STANDPIPE
GC	GENERAL CONTRACTOR	SP	STATIC PRESSURE
GPM	GALLONS PER MINUTE	STM	STEAM
GW	GREASE WASTE	T	THERMOSTAT
HB	HOSE BIB	TD	TEMPERATURE DROP
HP	HORSE POWER	TDR	TRENCH DRAIN
HTG	HEATING	TEMP	TEMPERATURE
HTR	HEATER	TYP	TYPICAL
HW	HOT WATER	UG	UNDERGROUND
HYD	HYDRANT	VAC	VACUUM
ID	INDIRECT	V	VENT
IN	INCH	VAV	VARIABLE AIR VOLUME
INV	INVERT	VENT	VENTILATION
LB	POUND	VTR	VENT THROUGH ROOF
LB/HR	POUNDS PER HOUR	W	WASTE
LAT	LEAVING AIR TEMPERATURE	WB	WET BULB
LP	LOW PRESSURE	WCO	WALL CLEAN OUT
LPG	LIQUEFIED PETROLEUM GAS	WH	WALL HYDRANT

EQUIPMENT ABBREVIATIONS

AC	AIR CONDITIONING UNIT	ET	EXPANSION TANK
ACCU	AIR COOLING CONDENSING UNIT	EVP	EVAPORATIVE COOLER COIL
AHU	AIR HANDLING UNIT	EWH	ELECTRIC WATER HEATER
AS	AIR SEPARATOR	FCU	FAN COIL UNIT
B	BOILER	FP	FIRE PUMP
CAS	CASSETTE DUCTLESS	GI	GREASE INTERCEPTOR
CH	CHILLER	GRV	GRAVITY ROOF VENTILATOR
CT	COOLING TOWER	HWU	HEAT PUMP WALL UNIT
CUH	CABINET UNIT HEATER	HWP	HEATING WATER PUMP
CHWP	CHILLED WATER PUMP	HRU	HEAT RECOVERY UNIT
DBP	DOMESTIC WATER BOOSTER PUMP	PRV	POWER ROOF VENTILATOR
DC	DUCT MOUNTED COIL	RE	RETURN/EXHAUST FAN
DCP	DOMESTIC WATER CIRCULATING PUMP	RTU	ROOFTOP UNIT
DOAS	DEDICATED OUTDOOR AIR SYSTEM	SP	SUMP PUMP
EF	EXHAUST FAN	UH	UNIT HEATER
EDC	ELECTRIC DUCT COIL	WH	WATER HEATER

* NOTE *

ALL OF GENERAL NOTES ON THIS SHEET ARE TO BE APPLIED TO ALL OTHER DRAWINGS IN THIS SET.THE SYMBOLS AND ABBREVIATIONS SHOWN ON THIS SHEET MAY OR MAY NOT BE USED IN THIS SET OF DRAWINGS.

HVAC SYMBOLS

- 18"x12" — SQUARE DUCT SIZE TAG (WIDTH x HEIGHT)
- 18"/12" — OVAL DUCT SIZE TAG (WIDTH / HEIGHT)
- 18"Ø — ROUND DUCT SIZE TAG (DIAMETER)
- (E) — EXISTING DUCT TAG
- DUCT BEING DEMOLISHED
- 18"x18" S/A — SUPPLY AIR
- 18"x18" S-O/A — CONDITIONED OUTSIDE AIR
- 18"x18" O/A — OUTSIDE AIR
- 18"x18" R/A — RETURN AIR
- 18"x18" S/A-FD — SUPPLY AIR - FABRIC DUCT
- 18"x18" E/A — EXHAUST AIR
- 18"x18" L/A — RELIEF AIR
- 18"x18" GE/A — GREASE EXHAUST AIR
- 18"x18" CE/A — CONDENSATE EXHAUST AIR
- 18"x18" SE/A — SMOKE EXHAUST AIR
- 6"Ø FLUE — EXHAUST GAS FLUE
- 6"Ø C/A — COMBUSTION AIR
- DROP — RECTANGULAR SUPPLY/OUTSIDE AIR DUCT RISE
- DROP — ROUND SUPPLY/OUTSIDE AIR DUCT RISE
- DROP — RECTANGULAR RETURN/TRANSFER AIR DUCT RISE
- DROP — ROUND RETURN/TRANSFER AIR DUCT RISE
- DROP — RECTANGULAR EXHAUST/RELIEF AIR DUCT RISE
- DROP — ROUND EXHAUST/RELIEF AIR DUCT RISE

GRILLES, REGISTERS & DIFFUSERS TAG

TYPE (SEE SCHEDULE)

3-CONE DIFFUSER — SD1 | 400 / 10" / 24x24 / 22 | H-5/7/14

CFM

NECK SIZE / MODULE SIZE

THROW-150FPM/ 100FPM/ 50FPM

THROW PATTERN

MAX NC RATING

PERFORATED DIFFUSER WITH DEFLECTORS — SD3 | 300 / 10" / 24x24

ROUND DIFFUSER WITH ADJUSTABLE PATTERNS — SD9 | 400 / 12" / ---

RG2 | 500 / 12"x10" / 24x24 / 18 — EGGCRATE RETURN GRILLE

LOUVERED DOUBLE DEFLECTION GRILLE — SG5 | 500 / 12"x10"

RG11 | 500 / 12"x10" / 24x12 — LOUVERED GRILLE

LINEAR BAR GRILLE — SLB3 | 400 / 48"x2 1/2"

LINEAR DIFFUSER TAG

TYPE (SEE SCHEDULE) — LSD1 | 200 / 1 / 4' - 0" / 8" / 8' - 0"AFF

CFM

NUMBER OF SLOTS / ACTIVE SLOT LENGTH (PLENUM LENGTH) / NECK SIZE

ELEVATION (CENTER OF FACE)

SECTION TOTAL TRACK LENGTH

LINEAR SLOT DIFFUSER — LSD1 | 200 / 1 / 4' - 0" / 8" — 6' - 0" — LSD1 | 200 / 1 / 4' - 0" / 8"

MECHANICAL EQUIPMENT TAGS

HEATING COIL FLOW — VAV-XX — Htg: 3.7 GPM — VAV BOX

BOTTOM OF EQUIPMENT ELEVATION — VAV-XX — 10' - 0"

EXISTING EQUIPMENT TO REMAIN — (E)VAV-XX

EXISTING RELOCATED EQUIPMENT — (R)VAV-XX

EQUIPMENT BY OTHERS (REFER TO OTHER DISCIPLINE FOR ADDITIONAL INFORMATION) — VAV-XX

OPERATING WEIGHT NOT INCLUDING CURB — RTU-XX — 590 lb

RTU-XX — 4.0 ton — NOMINAL COOLING CAPACITY — ROOFTOP UNIT

FUEL INPUT GAS PIPE FLOW — RTU-XX — 115000 Btu/h — 115 CFH

DATA DEVICE TAGS

EQUIPMENT ID — RTU-XX — SYMBOL

TEMPERATURE SENSOR	TS	C3H3	C3H3 DETECTOR
HUMIDITY SENSOR	HS	CH4	CH4 DETECTOR
TEMPERATURE & CO2 SENSOR	TC	CO2	CO2 DETECTOR
TEMPERATURE & HUMIDITY SENSOR	TH	CO	CO DETECTOR
THERMOSTAT	T	H2	H2 DETECTOR
HUMIDISTAT	H	H2S	H2S DETECTOR
O2 DETECTOR	O2	HZG	HAZARDOUS GAS DETECTOR
		NO2	NO2 DETECTOR

PANEL NAME — BMS CONTROL PANEL — HVAC-CP-X

DAMPER TAGS

COMB. FIRE/SMOKE DAMPER — S

FIRE DAMPER — F

SMOKE DAMPER — S

MANUAL BALANCING DAMPER — B

MOTORIZED DAMPER — M

BACKDRAFT DAMPER — D

12"x12" S/A — 12"x12" S/A

PIPING SYMBOLS

CHWR	CHILLED WATER RETURN
CHWS	CHILLED WATER SUPPLY
CD	CONDENSATE DRAINAGE
CWR	CONDENSER WATER RETURN
CWS	CONDENSER WATER SUPPLY
GWR	GEOTHERMAL WATER RETURN
GWS	GEOTHERMAL WATER SUPPLY
HWR	HEATING WATER RETURN
HWS	HEATING WATER SUPPLY
G	NATURAL GAS
PG	PROPANE GAS
REF-L	REFRIGERANT-LIQUID
REF-S	REFRIGERANT-SUCTION
REF-HG	REFRIGERANT-HOT GAS
STM	STEAM
CDR	CONDENSATE RETURN

PIPE DROP — PIPE RISE — PIPE TEE — CAP

4" — 2" — 4" — PLUG — REDUCING 45 DEGREE TEE — 45 DEGREE TEE

PIPE ACCESSORY TAGS

2" SHUTOFF BALL VALVE	2" LOCKED LOCK SHIELD VALVE	2" M-CNTRL ELEC. CONTROL
2" BALANCING BALANCING VALVE	2" PRV PRESS REDUCING	4" 3-WAY CNTRL 3-WAY ELEC. CONTROL
2" BUTTERFLY BUTTERFLY VALVE	2" QUICK QUICK OPENING	
2" CHECK CHECK VALVE	2" STRAINER	
(ALTERNATE CHECK VALVE SYMBOL)	1" GAS-CNTRL EMERG. GAS SHUTOFF	
2" CIRC CIRCUIT SETTER	1" PLUG PLUG VALVE	
2" GATE GATE VALVE	1" GAS COCK GAS SHUTOFF COCK	
2" GLOBE GLOBE VALVE	1" REG PRESS REGULATOR	

MECHANICAL NOTES

A. MECHANICAL PLANS ARE INTENDED TO PROVIDE INFORMATION FOR INSTALLATION OF A COMPLETE OPERATING MECHANICAL SYSTEM. PROVIDE ALL ESSENTIAL LABOR, MATERIALS AND DEVICES REQUIRED TO PRODUCE A QUALITY END PRODUCT.

B. CONTRACTOR SHALL REVIEW AND BECOME FAMILIAR WITH THE WORK OF ALL TRADES FOR PURPOSES OF COORDINATION AND ROUTING. CONTRACTOR SHALL PROVIDE REQUIRED PLANNING, COORDINATION AND SEQUENCING OF HVAC INSTALLATION WITH BUILDING COMPONENTS AND OTHER TRADES.

C. ALL WORK SHALL COMPLY WITH LOCAL, STATE, AND NATIONAL CODES. WORKMANSHIP SHALL MEET OR EXCEED INDUSTRY STANDARDS.

D. FABRICATE AND INSTALL DUCT PER SMACNA STANDARDS FOR 2-INCH WC WITH GALVANIZED METAL (26 GUAGE MINIMUM). ALL RADIUS ELBOWS AND TEES SHALL HAVE CENTERLINE RADIUS OF 1.5 X DUCT WIDTH. ALL SQUARE ELBOWS AND TEES SHALL HAVE TURNING VANES. PRIOR TO FABRICATION, MECHANICAL CONTRACTOR SHALL FIELD VERIFY STRUCTURAL OBSTRUCTIONS AND CEILING SPACE LIMITATIONS AND MAKE NECESSARY DUCT MODIFICATIONS INCLUDING CHANGING OF ASPECT RATIOS, ADDING OFFSETS, AND SHIFTING LOCATIONS. PROTECT DUCT BY STORING IN A CLEAN AND DRY ENVIRONMENT PRIOR TO INSTALLATION. COVER ENDS OF EXPOSED WORK AT THE END OF EVERY SHIFT.

E. ALL DUCT JOINTS, SEAMS AND BRANCH TAKEOFFS SHALL BE SEALED AIR-TIGHT WITH DUCT SEALANT EQUAL TO HARDCAST IRON-GRIP OR FOIL-GRIP TAPE EQUAL TO HARDCAST AFG-1402.

F. ROUND RUNOUTS SHALL HAVE SPIN-INS WITH DAMPERS, RECTANGULAR BRANCH DUCTS SHALL HAVE 45 DEGREE TAPS WITH AIR EXTRACTORS AND ALL TEES SHALL HAVE SPLITTER DAMPERS. PROVIDE ANY OTHER DEVICES REQUIRED TO BALANCE AIR SYSTEM.

G. FLEX DUCT SHALL HAVE METALIZED VAPOR BARRIER WITH MIN. R-VALUE OF 5.0. BOTH ENDS SHALL BE SECURED WITH NYLON BANDS AND METALIZED DUCT TAPE PER MFG'S RECOMMENDATIONS AND IN ACCORDANCE WITH U.L. 181B.

H. RIGID ROUND AND RECTANGULAR DUCT SHALL BE EXTERNALLY INSULATED WITH 2-INCH THICK 3/4 LB. DENSITY FIBERGLASS BLANKET WITH FSK VAPOR BARRIER AND A MIN. R-VALUE OF 6.5. STAPLE AND SEAL ALL JOINTS WITH 4-INCH-WIDE METALIZED DUCT TAPE EQUAL TO SHURFLEX SF-683.

I. COORDINATE THE EXACT LOCATION OF ALL CEILING DIFFUSERS, REGISTERS, AND GRILLES WITH NEW AND EXISTING LIGHTING. PROVIDE DIFFUSERS AND REGISTERS WITH 4-WAY BLOW PATTERN UNLESS OTHERWISE NOTED. INSULATE AND SEAL ALL GRILLE AND DIFFUSER NECKS TO MAINTAIN VAPOR BARRIER AND ELIMINATE CONDENSATION.

J. CONDENSATE DRAINS SHALL BE SUPPLIED FOR ALL COOLING EQUIPMENT. CONTRACTOR SHALL ENSURE PROPER INSTALLATION AND DRAINAGE AS REQUIRED BY FEDERAL, STATE, AND LOCAL CODES. CONDENSATE TRAPS FOR ALL AC UNITS SHALL BE SIZED AS RECOMMENDED BY UNIT MFG. CONDENSATE PIPING AND TRAPS SHALL BE SCHEDULE 40 PVC ROUTED TO EXTERIOR OR STORM DRAIN. INSULATE INTERIOR PIPING WITH 1/2-INCH-THICK UNICELLULAR INSULATION.

K. REFRIGERANT PIPING SHALL BE TYPE ACR COPPER WITH SILVER SOLDERED JOINTS. INSTALL PER EQUIPMENT INSTALLATION INSTRUCTIONS. INSULATION SHALL BE 1-INCH-THICK MINIMUM.

L. GAS PIPING SHALL BE A-53 SCHEDULE 40 BLACK STEEL WITH MALLEABLE FITTINGS. PIPING BELOW GRADE SHALL HAVE FRP COATING AND ABOVE GRADE SHALL BE PRIMED AND PAINTED. BOND ALL GAS PIPING ABOVE GRADE AND WITHIN BUILDING. PROVIDE MAGNETIC MARKER TAPE 12-INCHES ABOVE ALL BELOW GRADE PIPING.

M. ALL PIPING SHALL BE SUPPORTED AND SECURED WITH SUITABLE HANGERS, STRAPS OR PIPE STANDS. SUPPORT WITH NO DROOPS OR SAGS. ALL HANGERS AND ATTACHMENTS SHALL BE PLATED, GALVANIZED OR PAINTED. PROVIDE ISOLATION ON PIPING OF DISSIMILAR MATERIALS.

N. POWER WIRING, DISCONNECTS AND STARTERS NOT FURNISHED WITH HVAC EQUIPMENT AND FINAL CONNECTIONS SHALL BE BY THE E.C.

O. CONTROL WIRING, RELAYS AND INTERLOCKING DEVICES SHALL BE PROVIDED BY THE M.C.

P. UL LISTED DUCT SMOKE DETECTORS SHALL BE FURNISHED, INSTALLED AND TESTED BY THE M.C. THE E.C. SHALL PROVIDE 120V POWER TO EACH DUCT SMOKE DETECTOR WHERE REQUIRED. THE M.C. SHALL PROVIDE REMOTE ALARM/TEST STATIONS FOR EACH DUCT SMOKE DETECTOR.

Q. TEMPERATURE CONTROLS FOR EACH HEATING-COOLING SYSTEM SHALL CONSIST OF AN ELECTRONIC PROGRAMMABLE HEATING-COOLING THERMOSTAT WITH HEAT-OFF-COOL-AUTO SYSTEM SWITCH AND AUTO-ON FAN SWITCH. MOUNT THERMOSTATS 48-INCHES ABOVE FINISHED FLOOR AND A MINIMUM 8" FROM ANY OTHER SWITCHING DEVICES.

R. INSTALL EQUIPMENT TO FACILITATE SERVICING, MAINTENANCE AND REPAIR IN ACCORDANCE WITH MANUFACTURER'S INSTALLATION INSTRUCTIONS, AS WELL AS SPECIFIC INSTRUCTIONS ON PLANS. PROVIDE A 4" HOUSEKEEPING PAD FOR EACH PIECE OF MECHANICAL EQUIPMENT. COORDINATE SIZES WITH MECHANICAL EQUIPMENT SELECTED.

S. PROVIDE FLEX CONNECTORS AT ALL DUCT TO EQUIPMENT CONNECTIONS NOT HAVING INTERNALLY ISOLATED FANS.

T. CONTRACTOR SHALL BALANCE AIR SYSTEM TO QUANTITIES INDICATED ON PLANS AND PROVIDE TYPE WRITTEN REPORT WITH O AND M MANUALS.

U. ALL EQUIPMENT AND SYSTEMS SHALL BE WASHED, MECHANICAL AREAS CLEANED AND PAINTED SURFACES TOUCHED UP TO MATCH FACTORY APPLIED FINISHES. ALL DUCT SYSTEMS AND AIR HANDLERS SHALL BE VACUUMED AND WIPED CLEAN ON THE INSIDE PRIOR TO TURNING THE PROJECT OVER TO THE OWNER. SYSTEMS THAT HAVE NOT BEEN ADEQUATELY PROTECTED DURING INSTALLATION WILL REQUIRE CLEANING AGAIN AT THE END OF THE PROJECT.

V. CONTRACTOR SHALL INSTALL A NEW SET OF PLEATED FILTERS BEFORE TURNING BUILDING OVER TO OWNER.

W. CONTRACTOR SHALL PROVIDE BUILDING OWNER WITH A COMPLETE OPERATING AND MAINTENANCE MANUAL INCLUDING EQUIPMENT BASIC DATA, CONTROL INFORMATION, ROUTINE MAINTENANCE ACTIONS AND SERVICE AGENCIES' NAME, PHONE NUMBER, AND ADDRESS.

HVAC SHEET INDEX

M000	HVAC TITLE SHEET
M101	HVAC FLOOR PLAN
M301	HVAC SCHEDULES
M302	HVAC SCHEDULES
M401	HVAC DETAILS

ARCHITECT

RON W. WEBB
1659 W. HANRAHAN ROAD
AYDEN, NC. 28513
TEL: (252) 531-2711

WEBB MT PISGAH

145 PROSPECT CHURCH RD
ERWIN, NC 28339

PROJECT CONSULTANTS

KAIROS PROJECT GROUP, INC.

120 SOMMERVILLE PARK ROAD
RALEIGH, NC 27603
NC FIRM # C-3824

NORTH CAROLINA PROFESSIONAL SEAL 33293 ENGINEER BENJAMIN D. LEWIS

12/09/2024

- [x] For Construction
- [ ] Not for Construction
- [ ] Review Set
- [x] Bid Set

All drawings and copies thereof are instruments of service and as such remain the property of Ron W. Webb Architect They are to be used only with respect to this project. With the exception of one complete set for each party to the contract, all copies are to be returned or accounted for to Ron W. Webb Architect upon completion of the work. None or part of these drawings may be reproduced without the express written consent of Ron W. Webb Architect. These plans are copyrighted and are subject to copyright protection as an "Architectural Work" under Sec. 102 of the Copyright Act, 17 U.S.O. as amended December 1990 and known as Architectural Works Copyright Protection Act of 1990

© COPYRIGHT 2020

Issue Date: Issue Date

Plot Date: 10/23/2023 4:27:08 PM

Revisions

Mark	Date	Description

Drawing No.

HVAC TITLE SHEET

M000

of

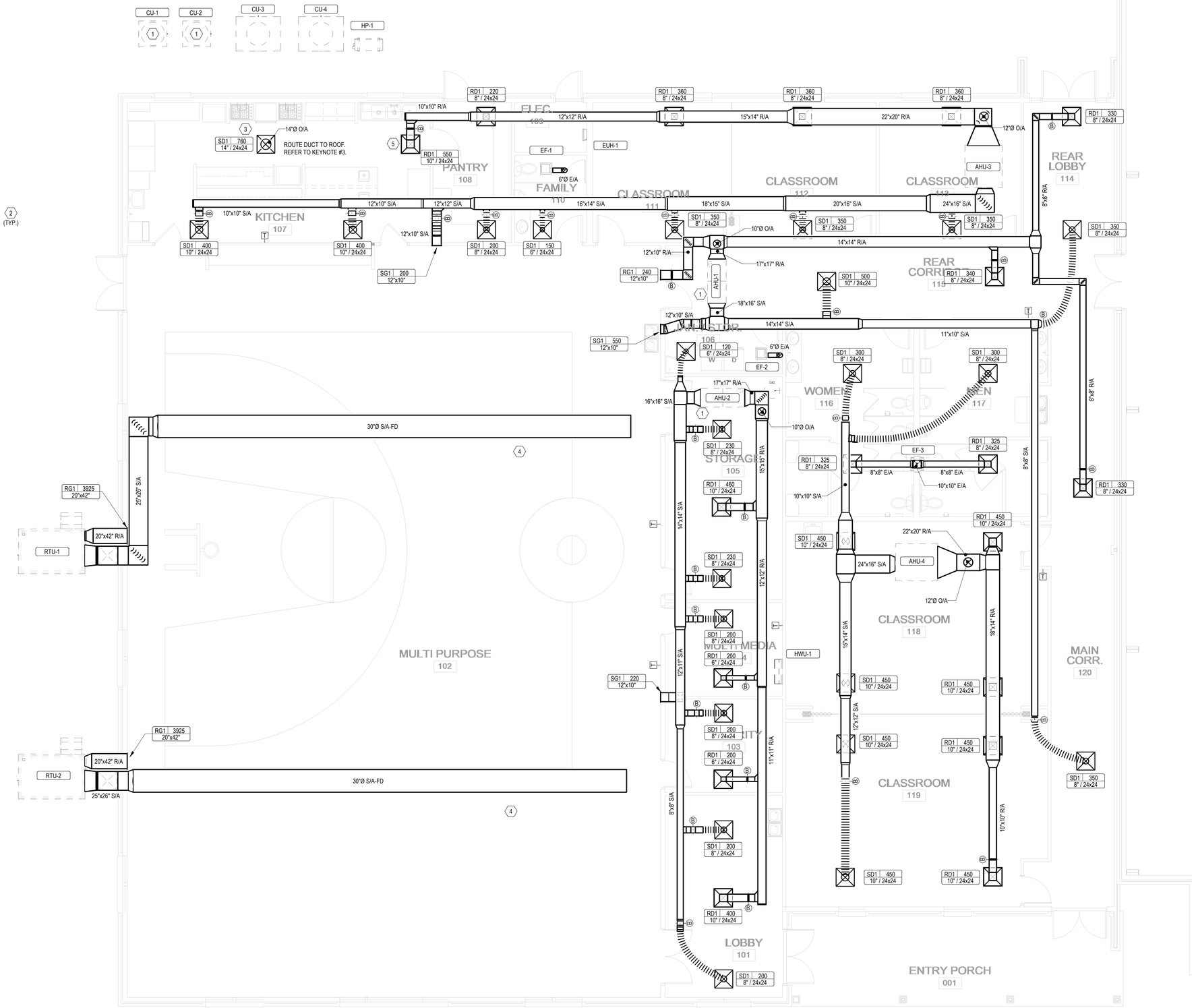

1 M101 LEVEL 1 HVAC PLAN
3/16" = 1'-0"

KEYNOTES

1. EXISITING PIECE OF EQUIPMENT. CONTRACTOR TO LOCATE CURRENT EXISTING LOCATION AND SAVE PIECE OF EQUIPMENT, STORE IN A SAFE AND CLEAN ENVIORNMENT. CONTRACTOR TO THEN LOCATE TO NEW LOCATIONS SHOWN ON PLAN AND CONNECT/ASSEBMLE ACCORDINGLY.
2. CONTRACTOR TO COORDINATE WITH OWNER ON FINAL LOCATION PLACEMENTS FOR OUTDOOR UNIT EQUIPMENT.
3. CONTRACTOR TO INSTALL MOTORIZED DAMPER ON OUTDOOR AIR INTAKE DUCT. COORDINATE WITH ELECTRICAL CONTRACTOR SUCH THAT THE DAMPER OPENS WHEN KITCHEN HOODS ARE TURNED ON, AND CLOSES WHEN HOODS ARE TURNED OFF. IT IS ASSUMED THAT THE KITCHEN HOODS INCLUDE A BACKDRAFT DAMPER OR BAFFLES.
4. ALL FABRIC DUCT SHALL HAVE ORFICE DISPERSION OUTLETS, SET AT ORIENTATIONS OF 4:30 AND 7:30.
5. RETURN DUCT SHALL MAINTAIN A DISTANCE OF AT LEST 10' FROM ANY KITCHEN APPLIANCE AND RANGE HOODS.

ARCHITECT

RON W. WEBB
1659 W. HANRAHAN ROAD
AYDEN, NC. 28513
TEL: (252) 531-2711

WEBB MT PISGAH

145 PROSPECT CHURCH RD
ERWIN, NC 28339

PROJECT CONSULTANTS

KAIROS PROJECT GROUP, INC.
120 SOMMERVILLE PARK ROAD
RALEIGH, NC 27603
NC FIRM # C-3824

NORTH CAROLINA PROFESSIONAL ENGINEER SEAL 33293 BENJAMIN D. LEWIS
12/09/2024

- [x] For Construction
- [ ] Not for Construction
- [ ] Review Set
- [x] Bid Set

All drawings and copies thereof are instruments of service and as such remain the property of Ron W. Webb Architect They are to be used only with respect to this project. With the exception of one complete set for each party to the contract, all copies are to be returned or accounted for to Ron W. Webb Architect upon completion of the work. None or part of these drawings may be reproduced without the express written consent of Ron W. Webb Architect. These plans are copyrighted and are subject to copyright protection as an "Architectural Work" under Sec. 102 of the Copyright Act, 17 U.S.O. as amended December 1990 and known as Architectural Works Copyright Protection Act of 1990
© COPYRIGHT 2020

Issue Date: Issue Date
Plot Date: 10/23/2023 4:27:12 PM

Revisions

Mark	Date	Description

Drawing No.

HVAC FLOOR PLAN

M101

of

2018 NC MECHANICAL CODE - VENTILATION CALCULATIONS

ZONE 1

ROOM NAME	OCCUPANCY CLASS	AREA (Az)	OCCUPANCY DENSITY (PEOPLE / 1000 FT^2)	OCCUPANCY (Pz)	OCCUPANCY BASED		AREA BASED		BREATHING ZONE OUTDOOR AIRFLOW (Vb = Rp*Pz + Ra*Az)	ZONE AIR DISTRIBUTION EFFECTIVENESS	ZONE OUTDOOR AIRFLOW (Voz = Vbz /Ez)	EXHAUST RATE (CFM)
					CFM / PERSON (Rp)	CFM (Rp*Pz)	CFM / SF (Ra)	CFM (Ra*Az)				
MULTI PURPOSE	SPORTS (PLAY AREA)	4969	0	0	0	0	0.3	1490.7	1490.7	0.8	1864	0
REAR CORRIDOR	PUBLIC SPACES (CORRIDORS)	336	0	0	0	0	0.06	20.16	20.16	0.8	26	0
MAIN CORRIDOR	PUBLIC SPACES (CORRIDORS)	498	0	0	0	0	0.06	29.88	29.88	0.8	38	0
REAR LOBBY	PUBLIC SPACES (CORRIDORS)	158	0	0	0	0	0.06	9.48	9.48	0.8	12	0
TOTALS ------>		**5961**		**0**							**1940**	**0**

OUTDOOR AIR INTAKE FLOW RATE:	1940
EXHAUST FLOW RATE PLUS 8% FOR PRESSURIZATION	0
FINAL VENT. AIR REQUIREMENT (GREATER OF THE ABOVE):	**1940**

BALANCE RTU-1 TO PROVIDE 870 CFM OF OUTSIDE AIR.
BALANCE RTU-2 TO PROVIDE 870 CFM OF OUTSIDE AIR.
BALANCE AHU-1 TO PROVIDE 360 CFM OF OUTSIDE AIR.

2018 NC MECHANICAL CODE - VENTILATION CALCULATIONS

ZONE 2

ROOM NAME	OCCUPANCY CLASS	AREA (Az)	OCCUPANCY DENSITY (PEOPLE / 1000 FT^2)	OCCUPANCY (Pz)	OCCUPANCY BASED		AREA BASED		BREATHING ZONE OUTDOOR AIRFLOW (Vb = Rp*Pz + Ra*Az)	ZONE AIR DISTRIBUTION EFFECTIVENESS	ZONE OUTDOOR AIRFLOW (Voz = Vbz /Ez)	EXHAUST RATE (CFM)
					CFM / PERSON (Rp)	CFM (Rp*Pz)	CFM / SF (Ra)	CFM (Ra*Az)				
JANITOR/STORAGE	ASHRAE62.1-2019-JC	115	0	0	10	0	0	0	0	0.8	0	115
STORAGE	RETAIL STORES (STORAGE ROOMS)	208	0	0	0	0	0.06	12.48	12.48	0.8	16	0
MULTIMEDIA	EDUCATION (MEDIA CENTER)	134	25	4	10	40	0.12	16.08	56.08	0.8	71	0
SECURITY	CORRECTIONAL (GUARD STATIONS)	208	15	4	5	20	0.06	12.48	32.48	0.8	41	0
LOBBY	OFFICES (MAIN ENTRY LOBBY)	290	10	3	5	15	0.06	17.4	32.4	0.8	41	0
TOTALS ------>		**955**		**11**							**169**	**115**

OUTDOOR AIR INTAKE FLOW RATE:	169
EXHAUST FLOW RATE PLUS 8% FOR PRESSURIZATION	124.2
FINAL VENT. AIR REQUIREMENT (GREATER OF THE ABOVE):	**169**

BALANCE AHU-2 TO PROVIDE 340 CFM OF OUTSIDE AIR

2018 NC MECHANICAL CODE - VENTILATION...

ZONE 4

ROOM NAME	OCCUPANCY CLASS	AREA (Az)	OCCUPANCY DENSITY (PEOPLE / 1000 FT^2)	OCCUPANCY (Pz)	OCCUPANCY BASED		AREA BASED		BREATHING ZONE OUTDOOR AIRFLOW (Vb = Rp*Pz + Ra*Az)	ZONE AIR DISTRIBUTION EFFECTIVENESS	ZONE OUTDOOR AIRFLOW (Voz = Vbz /Ez)	EXHAUST RATE (CFM)
					CFM / PERSON...	CFM...	CFM / SF...	CFM...				
WOMEN'S BR	PUBLIC SPACES (TOILET...	305	0	0	0	0	0	0	0	0.8	0	200
MEN'S BR	PUBLIC SPACES (TOILET...	292	0	0	0	0	0	0	0	0.8	0	200
CLASSROOM	EDUCATION (CLASSROOM...	603	35	22	7.5	165	0	0	165	0.8	207	0
CLASSROOM	EDUCATION (CLASSROOM...	603	35	22	7.5	165	0	0	165	0.8	207	0
TOTALS ------>		**1803**		**0**							**414**	**400**

OUTDOOR AIR INTAKE FLOW RATE:	414
EXHAUST FLOW RATE PLUS 8% FOR PRESSURIZATION	432
FINAL VENT. AIR REQUIREMENT (GREATER OF THE ABOVE):	**432**

BALANCE RTU-5 TO PROVIDE CFM OF OUTSIDE AIR

2018 NC MECHANICAL CODE - VENTILATION...

ZONE 3

ROOM NAME	OCCUPANCY CLASS	AREA (Az)	OCCUPANCY DENSITY (PEOPLE / 1000 FT^2)	OCCUPANCY (Pz)	OCCUPANCY BASED		AREA BASED		BREATHING ZONE OUTDOOR AIRFLOW (Vb = Rp*Pz + Ra*Az)	ZONE AIR DISTRIBUTION EFFECTIVENESS	ZONE OUTDOOR AIRFLOW (Voz = Vbz /Ez)	EXHAUST RATE (CFM)
					CFM / PERSON...	CFM...	CFM / SF...	CFM...				
CLASSROOM	EDUCATION (CLASSROO...	243	35	9	7.5	67.5	0	0	67.5	0.8	85	0
CLASSROOM	EDUCATION (CLASSROO...	243	35	9	7.5	67.5	0	0	67.5	0.8	85	0
CLASSROOM	EDUCATION (CLASSROO...	238	35	9	7.5	67.5	0	0	67.5	0.8	85	0
FAMILY	EDUCATION (DAY CARE)	77	25	2	10	20	0.18	13.86	33.86	0.8	43	0
PANTRY	ASHRAE 62.1-2019...	135	2	1	5	5	0.06	8.1	13.1	0.8	17	0
KITCHEN	FOOD & BEVERAGE...	520	0	0	0	0	0	0	0	0.8	0	364
TOTALS ------>		**1456**		**30**							**315**	**364**

OUTDOOR AIR INTAKE FLOW RATE:	315
EXHAUST FLOW RATE PLUS 8% FOR PRESSURIZATION	393.12
FINAL VENT. AIR REQUIREMENT (GREATER OF THE ABOVE):	**394**

BALANCE RTU-6 TO PROVIDE CFM OF OUTSIDE AIR

ARCHITECT

RON W. WEBB
1659 W. HANRAHAN ROAD
AYDEN, NC. 28513
TEL: (252) 531-2711

WEBB MT PISGAH

145 PROSPECT CHURCH RD
ERWIN, NC 28339

PROJECT CONSULTANTS

KAIROS PROJECT GROUP, INC.

120 SOMMERVILLE PARK ROAD
RALEIGH, NC 27603
NC FIRM # C-3824

NORTH CAROLINA PROFESSIONAL SEAL 33293 ENGINEER BENJAMIN D. LEWIS

12/09/2024

☒ For Construction
☐ Not for Construction
☐ Review Set
☒ Bid Set

All drawings and copies thereof are instruments of service and as such remain the property of Ron W. Webb Architect They are to be used only with respect to this project. With the exception of one complete set for each party to the contract, all copies are to be returned or accounted for to Ron W. Webb Architect upon completion of the work. None or part of these drawings may be reproduced without the express written consent of Ron W. Webb Architect. These plans are copyrighted and are subject to copyright protection as an "Architectural Work" under Sec. 102 of the Copyright Act, 17 U.S.O. as amended December 1990 and known as Architectural Works Copyright Protection Act of 1990
© COPYRIGHT 2020

Issue Date: Issue Date
Plot Date: 10/23/2023 4:27:16 PM

Revisions

Mark	Date	Description

Drawing No.

HVAC SCHEDULES

M301

of

PACKAGED ROOFTOP UNIT SCHEDULE

ID	DESCRIPTION	MANUFACTURER	MODEL NO.	QTY	ARRANGEMENT	SUPPLY AIR FLOW	OUTSIDE AIR FLOW	EXHAUST AIRFLOW	SECONDARY FAN INCLUDE POWER EXHAUST	COMPRESSOR REFRIGERANT TYPE	COMPRESSOR REFRIGERANT CHARGE	SEER	EER	UNIT DIMENSIONS LENGTH	UNIT DIMENSIONS WIDTH	UNIT DIMENSIONS HEIGHT	UNIT WEIGHT	FLA	MCA	MOCP	VOLT	PH	REMARKS
RTU-1	ROOFTOP UNIT	CARRIER	50FCQM12A55-0A0A0	1	HORIZONTAL	4000 CFM	870 CFM	795 CFM	Yes	R-410A	21 lb	14.3	11	7' - 4 1/8"	4' - 11 1/2"	4' - 1 3/8"	955 lb	21.7 A	86.0 A	90.0 A	208 V	3	PROVIDE 10KW OF AUXILLARY HEAT. EQUAL OR EQUIVALENT IS ACCEPTABLE.
RTU-2	ROOFTOP UNIT	CARRIER	50FCQM12A55-0A0A0	1	HORIZONTAL	4000 CFM	870 CFM	795 CFM	Yes	R-410A	21 lb	14.3	11	7' - 4 1/8"	4' - 11 1/2"	4' - 1 3/8"	955 lb	21.7 A	86.0 A	90.0 A	208 V	3	PROVIDE 10KW OF AUXILLARY HEAT. EQUAL OR EQUIVALENT IS ACCEPTABLE.

ELECTRIC UNIT HEATER SCHEDULE

ID	MANUFACTURER	MODEL NO.	QTY	TYPE	ARRANGEMENT	ELECTRIC HEATING COIL CAP	AIRSIDE DESIGN FLOW	AIRSIDE EAT(db)	AIRSIDE LAT(db)	HEATING ELEMENT QTY	HEATING ELEMENT POWER	HEATING ELEMENT SCR	UNIT DIMENSIONS LENGTH	UNIT DIMENSIONS WIDTH	UNIT DIMENSIONS HEIGHT	AFF ELEVATION	UNIT WEIGHT	FLA	VOLT	PH	REMARKS
EUH-1	BERKO	FRC	1	CABINET	RECESSED MOUNT	5118 Btu/h	100 CFM	55.0 °F	102.4 °F	1	1.5 kW	No	3 7/8"	1' - 2 5/16"	1' - 6 1/4"	1' - 0"	25 lb	12.5 A	120 V	1	

SPLIT SYSTEM AIR SOURCE HEAT PUMP

ID	MANUFACTURER	MODEL NO.	QTY	NOMINAL COOLING CAP	COMPRESSOR REFRIGERANT TYPE	EER	UNIT DIMENSIONS LENGTH	UNIT DIMENSIONS WIDTH	UNIT DIMENSIONS HEIGHT	UNIT WEIGHT	FLA	MCA	MOCP	VOLT	PH	FREQ	INTERLOCK ID	REMARKS
CU-1	UNKNOWN	UNKNOWN	1	4.00 ton	-	0	2' - 10 1/4"	3' - 1 1/4"	3' - 9 1/8"	0 lb	0.0 A	0.0 A	15.0 A	0 V	0	0 Hz	AHU-1	EXISTING EQUIPMENT ON SITE.
CU-2	UNKNOWN	UNKNOWN	1	4.00 ton	-	0	2' - 10 1/4"	3' - 1 1/4"	3' - 9 1/8"	0 lb	0.0 A	0.0 A	15.0 A	0 V	0	0 Hz	AHU-2	EXISTING EQUIPMENT ON SITE.
CU-3	CARRIER	38AUQM07A0A5	1	6.00 ton	R-410A	11	4' - 11 13/32"	3' - 9 29/32"	3' - 6 3/8"	444 lb	20.0 A	25.0 A	30.0 A	208 V	3	60 Hz	AHU-3	
CU-4	CARRIER	38AUQM07A0A5	1	6.00 ton	R-410A	11	4' - 11 13/32"	3' - 9 29/32"	3' - 6 3/8"	444 lb	20.0 A	25.0 A	30.0 A	208 V	3	60 Hz	AHU-4	
HP-1	CARRIER	38MARBQ09AA3	1	0.75 ton	R-410A	16.2	11 15/16"	2' - 6 1/8"	1' - 9 13/16"	75 lb	0.0 A	15.0 A	15.0 A	208 V	1	60 Hz	HWU-1	

AIR HANDLING UNIT SUMMARY SCHEDULE

ID	MANUFACTURER	MODEL NO.	QTY	VENTILATION DESIGN AIRFLOW	SUPPLY FAN DESIGN AIRFLOW	RETURN/EXHAUST FAN AIRFLOW DESIGN	NET COOLING CAP	UNIT DIMENSIONS LENGTH	UNIT DIMENSIONS WIDTH	UNIT DIMENSIONS HEIGHT	UNIT WEIGHT	FLA	MCA	MOCP	VOLT	PH	INTERLOCK CONDENSING UNIT ID	REMARKS
AHU-1	UNKNOWN	UNKNOWN	1	360 CFM	1600 CFM	1240 CFM	0 Btu/h	0"	0"	0"	0 lb	0.0 A	0.0 A	0.0 A	0 V	0		EXISTING EQUIPMENT ON SITE.
AHU-2	UNKNOWN	UNKNOWN	1	340 CFM	1600 CFM	1260 CFM	0 Btu/h	0"	0"	0"	0 lb	0.0 A	0.0 A	0.0 A	0 V	0		EXISTING EQUIPMENT ON SITE.
AHU-3	Carrier	40RFQA07A2A5	1	550 CFM	2400 CFM	1850 CFM	72000 Btu/h	4' - 1"	2' - 4 3/16"	4' - 8 1/16"	380 lb	6.4 A	8.0 A	15.0 A	208 V	3	CU-3	PROVIDE 5KW OF AUXILLARY HEAT.
AHU-4	Carrier	40RFQA07A2A5	1	600 CFM	2400 CFM	1800 CFM	72000 Btu/h	4' - 1"	2' - 4 3/16"	4' - 8 1/16"	380 lb	6.4 A	8.0 A	15.0 A	208 V	3	CU-4	PROVIDE 5KW OF AUXILLARY HEAT.

FAN COIL UNIT SCHEDULE

ID	DESCRIPTION	MANUFACTURER	MODEL NO.	QTY	ARRANGEMENT	COOLING COIL NOMINAL CAP	UNIT DIMENSIONS LENGTH	UNIT DIMENSIONS WIDTH	UNIT DIMENSIONS HEIGHT	UNIT WEIGHT	MCA	VOLT	PH	REMARKS
HWU-1	Heat Pump Indoor Unit High Wall Ductless System	Carrier Corporation	40MAQB09B--3	1	WALL-MOUNT	0.75 ton	2' - 8 7/8"	7 13/16"	11 1/32"	20 lb	0.2 A	208 V	1	POWERED FROM OUTDOOR HEAT PUMP UNIT.

EXHAUST FAN SCHEDULE

ID	DESCRIPTION	MANUFACTURER	MODEL NO.	QTY	TYPE	FAN DESIGN AIRFLOW	FAN DRIVE TYPE	UNIT DIMENSIONS LENGTH	UNIT DIMENSIONS WIDTH	UNIT DIMENSIONS HEIGHT	UNIT WEIGHT	FLA	MCA	MOCP	VOLT	PH	REMARKS
EF-1	CEILING FAN	GREENHECK	SP-110-VG	1	CEILING	70 CFM	DIRECT	10 1/2"	11 3/8"	7 5/8"	12 lb	0.2 A	0.3 A	15.0 A	120 V	1	EQUAL OR EQUIVALENT IS ACCEPTABLE.
EF-2	CEILING FAN	GREENHECK	SP-110-VG	1	CEILING	70 CFM	DIRECT	10 1/2"	11 3/8"	7 5/8"	12 lb	0.2 A	0.3 A	15.0 A	120 V	1	EQUAL OR EQUIVALENT IS ACCEPTABLE.
EF-3	POWER ROOF VENTILATOR	GREENHECK	G-095	1	DOWNBLAST	650 CFM	DIRECT	1' - 5"	1' - 5"	1' - 2 5/8"	29 lb	1.5 A	1.9 A	15.0 A	208 V	1	EQUAL OR EQUIVALENT IS ACCEPTABLE.

GRILLES, REGISTERS AND DIFFUSERS SCHEDULE

ID	MANUFACTURER	MODEL	MATERIAL	FINISH	QTY	INSTALLATION TYPE	SPECIFICATION	NOTES
RD1	Titus	PAR-AA	ALUMINUM	WHITE ENAMEL	18	LAY-IN INSTALLATION	PERFORATED DIFFUSER WITH FACE MOUNTED DEFLECTORS	
RG1	Titus	350FL	ALUMINUM	WHITE ENAMEL	3	SURFACE MOUNT INSTALLATION		
SD1	Titus	TMS-AA	ALUMINUM	WHITE ENAMEL	24	LAY-IN INSTALLATION	HIGH PERFORMANCE 3-CONE DIFFUSER	
SG1	Titus	301FL	ALUMINUM	WHITE ENAMEL	3	SURFACE MOUNT INSTALLATION		

2018 APPENDIX B
BUILDING CODE SUMMARY FOR ALL COMMERCIAL PROJECTS

MECHANICAL DESIGN
(PROVIDE ON THE MECHANICL SHEETS IF APPLICABLE)

MECHANICAL SUMMARY

MECHANICAL SYSTEMS, SERVICE SYSTEMS AND EQUIPMENT

Thermal Zone 3A
winter dry bulb: 22 F
summer dry bulb: 96 F

Interior design conditions
winter dry bulb: 68 F
summer dry bulb: 78 F
relative humidity: 50%

Building heating load: 107,500 BTU

Building cooling load: 489,000 BTU

Mechanical Spacing Conditioning System
Unitary SEE PLANS
description of unit:
heating efficiency:
cooling efficiency:
size category of unit:
Boiler
Size category. If oversized, state reason.: N/A
Chiller
Size category. If oversized, state reason.: N/A

List equipment efficiencies:

ARCHITECT

RON W. WEBB
1659 W. HANRAHAN ROAD
AYDEN, NC. 28513
TEL: (252) 531-2711

WEBB MT PISGAH

145 PROSPECT CHURCH RD
ERWIN, NC 28339

PROJECT CONSULTANTS
KAIROS PROJECT GROUP, INC.
120 SOMMERVILLE PARK ROAD
RALEIGH, NC 27603
NC FIRM # C-3824

NORTH CAROLINA PROFESSIONAL SEAL 33293 ENGINEER BENJAMIN D. SMITH
12/09/2024

☒ For Construction
☐ Not for Construction
☐ Review Set
☒ Bid Set

All drawings and copies thereof are instruments of service and as such remain the property of Ron W. Webb Architect They are to be used only with respect to this project. With the exception of one complete set for each party to the contract, all copies are to be returned or accounted for to Ron W. Webb Architect upon completion of the work. None or part of these drawings may be reproduced without the express written consent of Ron W. Webb Architect. These plans are copyrighted and are subject to copyright protection as an "Architectural Work" under Sec. 102 of the Copyright Act, 17 U.S.O. as amended December 1990 and known as Architectural Works Copyright Protection Act of 1990
© COPYRIGHT 2020

Issue Date: Issue Date
Plot Date: 10/23/2023 4:27:22 PM

Revisions

Mark	Date	Description

Drawing No.
HVAC SCHEDULES
M302
of

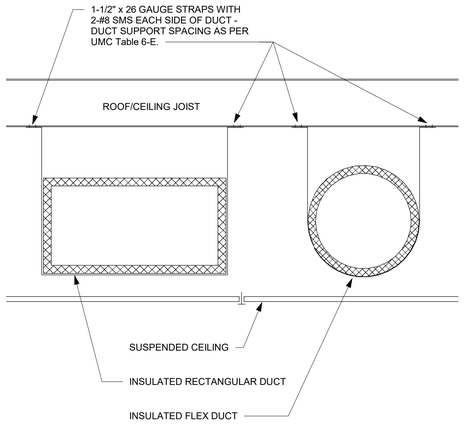

4 M401 DUCT SUPPORT DETAIL
NOT TO SCALE

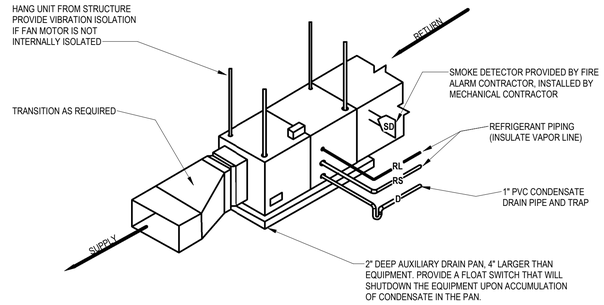

3 M401 AHU HORIZONTAL MOUNTING
NOT TO SCALE

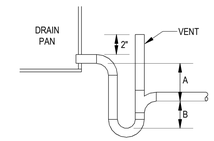

A= SCHEDULED FAN STATIC PLUS ONE INCH
B= 1/2 OF SCHEDULED FAN STATIC

2 M401 COOLING COIL CONDENSATE DRAIN DETAIL
NO SCALE

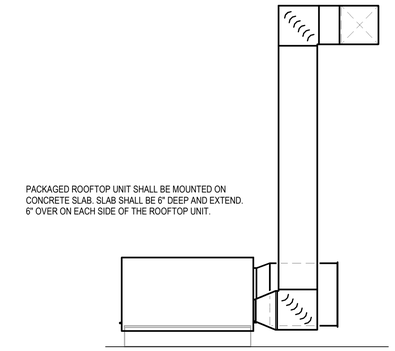

1 M401 PACKAGED ROOFTOP UNIT DETAIL
1/4" = 1'-0"

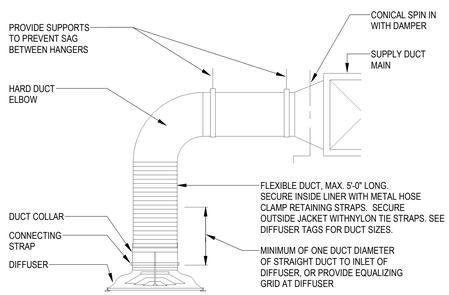

7 M401 DIFFUSER FLEXIBLE DUCT CONNECTION
NOT TO SCALE

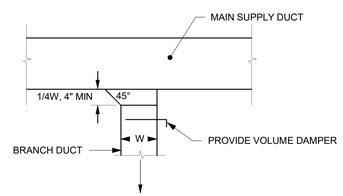

6 M401 DUCT TAKE-OFF DETAIL
NOT TO SCALE

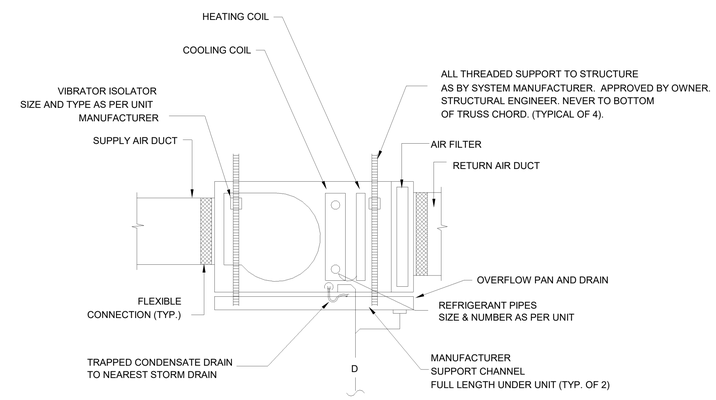

5 M401 AHU HORIZONTAL INSTALLATION DETAIL
NOT TO SCALE

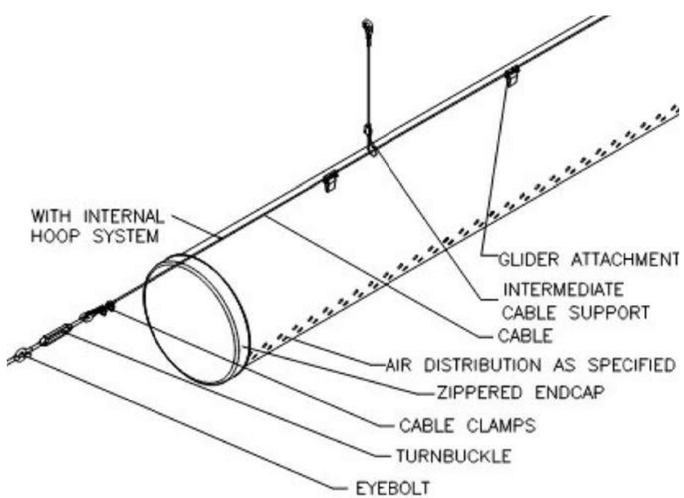

11 M401 FABRIC DUCT SUSPENSION DETAIL
NOT TO SCALE

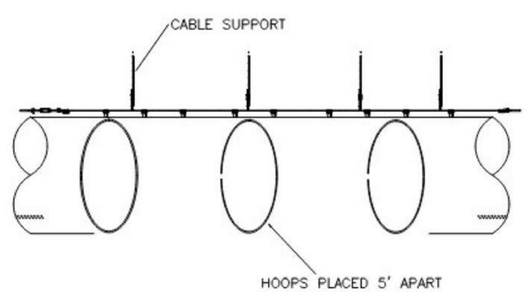

10 M401 FABRIC DUCT HOOP SECTION DETAIL
NOT TO SCALE

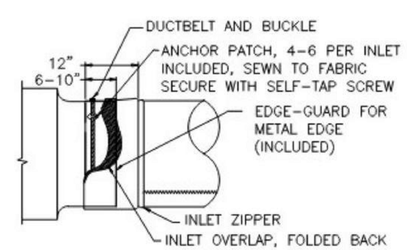

9 M401 FABRIC DUCT INLET ATTACHMENT DETAIL
NOT TO SCALE

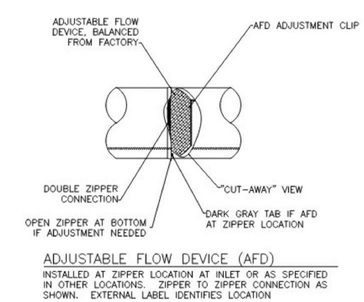

8 M401 FABRIC DUCT ADJUSTABLE FLOW DETAIL
NOT TO SCALE

ARCHITECT

RON W. WEBB
1659 W. HANRAHAN ROAD
AYDEN, NC. 28513
TEL: (252) 531-2711

WEBB MT PISGAH

145 PROSPECT CHURCH RD
ERWIN, NC 28339

PROJECT CONSULTANTS

KAIROS PROJECT GROUP, INC.
120 SOMMERVILLE PARK ROAD
RALEIGH, NC 27603
NC FIRM # C-3824

NORTH CAROLINA PROFESSIONAL SEAL 33293 ENGINEER BENJAMIN D. LEWIS

12/09/2024

- [x] For Construction
- [ ] Not for Construction
- [ ] Review Set
- [x] Bid Set

All drawings and copies thereof are instruments of service and as such remain the property of Ron W. Webb Architect They are to be used only with respect to this project. With the exception of one complete set for each party to the contract, all copies are to be returned or accounted for to Ron W. Webb Architect upon completion of the work. None or part of these drawings may be reproduced without the express written consent of Ron W. Webb Architect. These plans are copyrighted and are subject to copyright protection as an "Architectural Work" under Sec. 102 of the Copyright Act, 17 U.S.O. as amended December 1990 and known as Architectural Works Copyright Protection Act of 1990
© COPYRIGHT 2020

Issue Date: Issue Date
Plot Date: 10/23/2023 4:27:24 PM

Revisions

Mark	Date	Description

Drawing No.

HVAC DETAILS

M401

of

ELECTRICAL ABBREVIATIONS LIST

1P	1 POLE (2P, 3P, 4P, ETC.)
A	AMPERE
AC	ABOVE COUNTER
ACLG	ABOVE CEILING
ADO	AUTOMATIC DOOR OPENER
AF	AMP FRAME
AFF	ABOVE FINISHED FLOOR
AFG	ABOVE FINISHED GRADE
AFI	ARC FAULT CIRCUIT INTERRUPTER
AHU	AIR HANDLING UNIT
AL	ALUMINUM
ALT	ALTERNATE
AMP	AMPERE
AMPL	AMPLIFIER
ANNUN	ANNUNCIATOR
APPROX	APPROXIMATELY
AQ-STAT	AQUASTAT
ARCH	ARCHITECT, ARCHITECTURAL
AS	AMP SWITCH
AT	AMP TRIP
ATS	AUTOMATIC TRANSFER SWITCH
AUTO	AUTOMATIC
AUX	AUXILIARY
AV	AUDIO VISUAL
AWG	AMERICAN WIRE GAUGE
BATT	BATTERY
BD	BOARD
BLDG	BUILDING
BMS	BUILDING MANAGEMENT SYSTEM
C	CONDUIT
CAB	CABINET
CAT	CATALOG
CATV	CABLE TELEVISION
CB	CIRCUIT BREAKER
CCTV	CLOSED CIRCUIT TELEVISION
CKT	CIRCUIT
CLG	CEILING
COMB	COMBINATION
CMPR	COMPRESSOR
CONN	CONNECTION
CONST	CONSTRUCTION
CONT	CONTINUATION OR CONTINUOUS
CONTR	CONTRACTOR
CONV	CONVECTOR
CP	CIRCULATING PUMP
CRT	CATHODE-RAY TUBE
CT	CURRENT TRANSFORMER
CTR	CENTER
CU	COPPER
DCP	DOMESTIC WATER CIRCULATING PUMP
DEPT	DEPARTMENT
DET	DETAIL
DIA	DIAMETER
DISC	DISCONNECT
DIST	DISTRIBUTION
DN	DOWN
DPR	DAMPER
DS	SAFETY DISCONNECT SWITCH
DT	DOUBLE THROW
DWG	DRAWING
EC	ELECTRICAL CONTRACTOR
ELEC	ELECTRIC, ELECTRICAL
ELEV	ELEVATOR
ELU	EMERGENCY LIGHTING UNIT
EM	EMERGENCY
EMS	ENERGY MANAGEMENT SYSTEM
EMT	ELECTRICAL METALLIC TUBING
EP	ELECTRIC PNEUMATIC
EQUIP	EQUIPMENT
EWC	ELECTRIC WATER COOLER
EXIST	EXISTING
EXH	EXHAUST
EXP	EXPLOSION PROOF
FA	FIRE ALARM
FABP	FIRE ALARM BOOSTER POWER SUPPLY PANEL
FACP	FIRE ALARM CONTROL PANEL
FCU	FAN COIL UNIT
FIXT	FIXTURE
FLR	FLOOR
FLUOR	FLUORESCENT
FU	FUSE
FUDS	FUSED SAFETY DISCONNECT SWITCH
GA	GAUGE
GAL	GALLON
GALV	GALVANIZED
GC	GENERAL CONTRACTOR
GEN	GENERATOR
GFI	GROUND FAULT CIRCUIT INTERRUPTER
GFP	GROUND FAULT PROTECTOR
GND	GROUND
GRS	GALVANIZED RIGID STEEL (CONDUIT)
GYP BD	GYPSUM BOARD
HOA	HANDS-OFF-AUTOMATIC SWITCH
HORIZ	HORIZONTAL
HP	HORSEPOWER
HPF	HIGH POWER FACTOR
HT	HEIGHT
HTG	HEATING
HTR	HEATER
HV	HIGH VOLTAGE
HVAC	HEATING, VENTILATING AND AIR CONDITIONING
IC	INTERRUPTING CAPACITY
IG	ISOLATED GROUND
IMC	INTERMEDIATE METAL CONDUIT
INCAND	INCANDESCENT
IR	INFRARED
I/W	INTERLOCK WITH
J-BOX	JUNCTION BOX
KV	KILOVOLT
KVA	KILOVOLT-AMPERE
KVAR	KILOVOLT-AMPERE REACTIVE
KW	KILOWATT
KWH	KILOWATT HOUR
LOC	LOCATE OR LOCATION
LT	LIGHT
LTG	LIGHTING
LTNG	LIGHTNING
LV	LOW VOLTAGE
MAX	MAXIMUM
MAG.S	MAGNETIC STARTER
M/C	MOMENTARY CONTACT
MC	MECHANICAL CONTRACTOR
MCB	MAIN CIRCUIT BREAKER
MCC	MOTOR CONTROL CENTER
MDC	MAIN DISTRIBUTION CENTER
MDP	MAIN DISTRIBUTION PANEL
MFR	MANUFACTURER
MFS	MAIN FUSED DISCONNECT SW
MH	MANHOLE
MIC	MICROPHONE
MIN	MINIMUM
MISC	MISCELLANEOUS
MLO	MAIN LUGS ONLY
MMS	MANUAL MOTOR STARTER
MOA	MULTIOUTLET ASSEMBLY
MSP	MOTOR STARTER PANELBOARD
MSBD	MAIN SWITCHBOARD
MT	MOUNT
MT.C	EMPTY CONDUIT
MTS	MANUAL TRANSFER SWITCH
MTR	MOTOR, MOTORIZED
N.C.	NORMALLY CLOSED
NEC	NATIONAL ELECTRICAL CODE
NEMA	NATIONAL ELECTRICAL MANUFACTURER'S ASSOCIATION
NFDS	NON-FUSED SAFETY DISCONNECT SWITCH
NIC	NOT IN CONTRACT
NL	NIGHT LIGHT
N.O.	NORMALLY OPEN
NPF	NORMAL POWER FACTOR
NTS	NOT TO SCALE
OH	OVERHEAD
OL	OVERLOADS
PA	PUBLIC ADDRESS
PB	PULL BOX OR PUSHBUTTON
PE	PNEUMATIC ELECTRIC
PED	PEDESTAL
PF	POWER FACTOR
PH	PHASE
PIV	POST INDICATING VALVE
PNL	PANEL
PP	POWER POLE
PR	PAIR
PRI	PRIMARY
PROJ	PROJECTION
PRV	POWER ROOF VENTILATOR
PT	POTENTIAL TRANSFORMER
PVC	POLYVINYL CHLORIDE (CONDUIT)
PWR	POWER
QUAN	QUANTITY
RCPT	RECEPTACLE
REQD	REQUIRED
RM	ROOM
RSC	RIGID STEEL CONDUIT
RTU	ROOF TOP UNIT
SC	SURFACE CONDUIT
SEC	SECONDARY
SHT	SHEET
SIM	SIMILAR
S/N	SOLID NEUTRAL
SPEC	SPECIFICATION
SPKR	SPEAKER
SP	SPARE
SR	SURFACE RACEWAY
SS	STAINLESS STEEL
SSW	SELECTOR SWITCH
S/S	STOP/START PUSHBUTTONS
STA	STATION
STD	STANDARD
SURF	SURFACE MOUNTED
SW	SWITCH
SWBD	SWITCHBOARD
SYM	SYMMETRICAL
SYS	SYSTEM
TEL	TELEPHONE
TEL/DATA	TELEPHONE/DATA
TERM	TERMINAL
TL	TWIST LOCK
TR	TAMPER RESISTANT
T-STAT	THERMOSTAT
TTC	TELEPHONE TERMINAL CABINET
TV	TELEVISION
TVTC	TELEVISION TERMINAL CABINET
TYP	TYPICAL
UC	UNDER COUNTER
UE	UNDERGROUND ELECTRICAL
UG	UNDERGROUND
UH	UNIT HEATER
UT	UNDERGROUND TELEPHONE
UTIL	UTILITY
UV	ULTRAVIOLET
V	VOLT
VA	VOLT-AMPERES
VDT	VIDEO DISPLAY TERMINAL
VERT	VERTICAL
VFD	VARIABLE FREQUENCY DRIVE
VOL	VOLUME
W	WATT
W/	WITH
WG	WIRE GUARD
WH	WATER HEATER
W/O	WITHOUT
WP	WEATHERPROOF
XFMR	TRANSFORMER
XFR	TRANSFER

∠	ANGLE
@	AT
▲	DELTA
'	FEET
"	INCHES
#	NUMBER
Ø	PHASE
C	CENTER LINE
P	PLATE

ELECTRICAL SYMBOL LEGEND

SYMBOL	DESCRIPTION
	LIGHTING FIXTURES, TYPICAL, RECTANGULAR FILLED CIRCLES INDICATE RECESSED, OPEN CIRCLES INDICATE SURFACE DIAGONAL LINE INDICATES LENSED OUTER DOTS INDICATE SUSPENDED
	LIGHTING FIXTURES, TYPICAL, ROUND CENTER DOT INDICATES PENDANT DIAGONAL LINE INDICATES LENSED CHEVRON INDICATES WALL WASH
	WALL-MOUNTED FIXTURES, TYPICAL
	STRIP FIXTURE
	DIRECTIONAL LIGHT, TRACK, FLOOD
	LINEAR LIGHT, TAPE LIGHT
	EMERGENCY LIGHTING UNIT, CEILING-MOUNTED, INTEGRAL BATTERY
	EMERGENCY LIGHTING UNIT, CEILING-MOUNTED, REMOTE BATTERY
	EMERGENCY LIGHTING UNIT, WALL-MOUNTED, INTEGRAL BATTERY
	EMERGENCY LIGHTING UNIT, WALL-MOUNTED, REMOTE BATTERY
	EXIT LIGHT, CEILING-MOUNTED, SHADING AND ARROWS INDICATE FACES AND DIRECTION
	EXIT LIGHT, WALL-MOUNTED, SHADING AND ARROWS INDICATE FACES AND DIRECTION
	EXIT/ELU COMBO
	POLE/AREA LIGHTS
	POST-TOP AREA LIGHT
	BOLLARD LIGHT
	DIAGONAL HATCH INDICATES LIGHT ON A CRITICAL CIRCUIT
	SOLID HATCH INDICATES LIGHT ON AN EMERGENCY OR LIFE SAFETY CIRCUIT
S	SINGLE POLE SWITCH
S3	3-WAY SWITCH
S4	4-WAY SWITCH
SK	KEYED SWITCH
SP	SWITCH W/PILOT
SD	DIMMER SWITCH
SO	OCCUPANCY SENSOR W/ MANUAL SWITCH
ST	TIMER SWITCH
STD	TIME DELAY SWITCH
TC	TIME CONTROL SWITCH
FP	FIRE ALARM PULL STATION
FB	FIRE ALARM BELL
FH	FIRE ALARM HORN W/STROBE
FHS	FIRE ALARM SPEAKER W/STROBE
FS	FIRE ALARM BELL W/STROBE
FC	FIRE ALARM CHIME W/STROBE
	FIRE ALARM DOOR HOLDER
	FIRE ALARM DOOR CLOSER
FR	FIRE ALARM SHUT DOWN RELAY
	SPRINKLER FLOW SWITCH
	SPRINKLER VALVE TAMPER SWITCH
	THERMAL DETECTOR
	DUCT SMOKE DETECTOR
	CEILING SMOKE DETECTOR

SYMBOL	DESCRIPTION
	SINGLE RECEPT.
	DUPLEX RECEPT.
48"	(DESIGNATES SPECIFIC MOUNTING HEIGHT) DUPLEX RECEPT.
GFI	GFI DUPLEX RECEPT. (FEED THROUGH)
GFI/WP	GFI WEATHERPROOF RECEPT.
	SPLIT DUPLEX RECEPT.
	DUPLEX ISOLATED GROUND RECEPT.
	DUPLEX RECEPT. ON EMERG. CIRCUIT
	FLOOR DUPLEX RECEPT.
CLNG	CEILING DUPLEX RECEPT.
	FOURPLEX RECEPT.
	FOURPLEX RECEPT. ON EMERG. CIRCUIT
	240V RECEPTACLE
	RECEPT. ON CORD REEL
	SPECIAL RECEPT.
J	JUNCTION BOX
J	FLOOR JUNCTION BOX
J CLNG	CEILING JUNCTION BOX
PS - D2	MULTIOUTLET ASSEMBLY
	COMB. MOTOR STARTER (FUSED)
	SAFETY DISC. SW. (NON-FUSED)
	SAFETY DISC. SW. (FUSED)
R	RELAY
	PUSH BUTTON
P	POWER POLE (OPEN OFFICE STYLE)
	SURGERY SERVICE COLUMN
	STATIC GROUND RECEPTACLE
P	UTILITY SERVICE POWER POLE
XX-1 / XX-1	MOTOR IDENTITY (SEE SCHEDULE)
EXISTING TO REMAIN: XX-1 / XX-1 RELOCATED: XX-1 / XX-1 DEMOLISHED: XX-1 / XX-1	
T1	TRANSFORMER
	BUS DUCT W/ PLUG IN DISCONNECT CABLE TAP BOX

SYMBOL	DESCRIPTION
	TELEPHONE OUTLET
	FLOOR TELEPHONE OUTLET
1V2D	VOICE/DATA OUTLET # OF VOICE AND # OF DATA OUTLETS, FOR EXAMPLE 1V2D = 1 VOICE, 2 DATA
	FLOOR DATA OUTLET
CLNG	CEILING DATA OUTLET
M	MICROPHONE OUTLET
	CATV OUTLET
TV	TV OUTLET
V	VOLUME CONTROL
	DOOR BELL
	DOOR BUZZER
	DOOR CHIME
D	DOOR SIGNAL
	AUTO DOOR PUSH PAD
	ELECTRIC STRIKE
	MAGNETIC LOCK
CK	COMBINATION LOCK
	DOOR CONTACT
CR	CARD READER
	SECURITY KEYPAD
MD	MOTION DETECTOR
E	NURSE CALL EMERG. STATION
B	NURSE CALL CODE BLUE STATION
D	NURSE CALL DUTY STATION
S	NURSE CALL STAFF STATION
P	NURSE CALL PATIENT STATION
DL 1	NURSE CALL DOME LIGHT (1-COLOR)
DL 2	NURSE CALL DOME LIGHT (2-COLORS)

ELECTRICAL SHEET INDEX

SHEET	DESCRIPTION
E000	ELECTRICAL TITLE SHEET
E101	ELECTRICAL POWER PLAN
E201	ELECTRICAL LIGHTING PLAN
E301	ELECTRICAL SCHEDULES
E401	ELECTRICAL DETAILS
E501	ELECTRICAL SYSTEMS PLAN
E601	FIRE ALARM PLAN
E602	FIRE ALARM DETAILS
SHEET COUNT: 8	

ELECTRICAL SYMBOL NOTES

S3 / 1d — LIGHTING FIXTURE TAG DESCRIPTORS:
TOP VALUE: FIXTURE TYPE ID.
BOTTOM VALUE, NUMBER: CIRCUIT NUMBER, REFER TO DRAWINGS FOR PANEL.
BOTTOM VALUE, LOWERCASE LETTER: SWITCH DESIGNATION.
ABSENCE OF A SWITCH ID INDICATES FIXTURE IS CONTROLLED BY THE ONLY SWITCH IN THE SPACE.
"x" IN PLACE OF THE SWITCH ID INDICATES NIGHT LIGHT, UNSWITCHED.

EXIT LIGHTS. STEM INDICATES WALL MOUNTING. NO STEM INDICATES CEILING MOUNTING. SHADED AREA INDICATES ILLUMINATED FACE(S). ARROW INDICATES DIRECTIONAL ARROW ON ILLUMINATED FACE(S). THE CIRCUIT DESIGNATION IS INDICATED BY A NUMBER. EXAMPLE: THE WALL MOUNTED EXIT LIGHT TYPE "E1" WITH SINGLE FACE AND DIRECTIONAL ARROW IS CONNECTED TO CIRCUIT 1.

DEVICES. THE CIRCUIT DESIGNATION IS INDICATED BY A NUMBER. THE SWITCH DESIGNATION IS INDICATED BY A LOWER CASE LETTER. EXAMPLE: SPLIT DUPLEX RECEPTACLE IS CONNECTED TO CIRCUIT 1 AND ONE RECEPTACLE OUTLET IS CONTROLLED BY SWITCH "d".

THE CONTROL DEVICE DESIGNATION IS INDICATED BY A LOWER CASE LETTER. EXAMPLE: SINGLE POLE SWITCH "d" TO CONTROL LIGHTING FIXTURES INDICATED BY "d".

WALL BOX DIMMER WITH SIZE AS INDICATED AT DEVICE. EXAMPLE: 600 WATT WALL BOX DIMMER TO CONTROL LIGHTING FIXTURES INDICATED BY "e". SEE SPECIFICATIONS FOR WATTAGE IF NOT INDICATED.

SPECIAL CONNECTIONS. THE EQUIPMENT IS INDICATED BY A NUMBER IN A CIRCLE. SEE THE MOTOR AND EQUIPMENT SCHEDULE FOR THE LOAD DESCRIPTION AND TYPE OF CONNECTION. THE CIRCUIT DESIGNATION IS INDICATED BY NUMBER(S) ADJACENT TO THE SYMBOL. EXAMPLE: EQUIPMENT NO. ELEC-1; 1 PHASE CONNECTION TO CIRCUITS 2, 4.

PANELBOARDS. PANELBOARD DOORS MAY BE SHOWN TO INDICATE OPENING SIDE OF RECESSED PANELBOARDS. SEE PANELBOARD IDENTIFICATION FOR DESIGNATION CODES.

FLOOR CLEARANCE AREA

MOTOR CONNECTIONS. THE MOTOR IS INDICATED BY A NUMBER WITHIN OR CHARACTERS ADJACENT TO THE MOTOR SYMBOL. SEE THE MOTOR AND EQUIPMENT SCHEDULE FOR THE MOTOR DESCRIPTION AND ELECTRICAL REQUIREMENTS.

TRANSFORMERS. THE TRANSFORMER TYPE IS INDICATED BY A NUMBER FOLLOWING THE UPPER CASE LETTER "T". SEE THE TRANSFORMER SCHEDULE OR THE SINGLE LINE DIAGRAM FOR THE TRANSFORMER DESCRIPTION AND REQUIREMENTS. EXAMPLE: TRANSFORMER TYPE "T1".

CONDUIT IN CEILING, FLOOR OR WALL AS REQUIRED BY FIELD CONDITIONS

CONDUIT IN FLOOR

#12 — CONDUIT SHOWN WITHOUT SLASH MARKS SHALL CONTAIN 1 # 12 CONDUCTOR PER PHASE, NEUTRAL, AND GROUND IN 1/2" CONDUIT UNLESS SPECIFIC EQUIPMENT REQUIRES A DIFFERENT SIZE.

#10 — CONDUIT SHOWN SHALL CONTAIN 1 # 10 CONDUCTOR PER PHASE IN ELECTRICAL CODE SIZED MINIMUM CONDUIT UNLESS A CONDUCTOR AND CONDUIT SIZE IS SHOWN ADJACENT.

P4N-102 / 1, 3, 5 — HOME RUN TO BRANCH CIRCUIT PANELBOARD. THE PANELBOARD DESIGNATION IS SHOWN ADJACENT TO THE HOME RUN ARROW AS A NUMERATOR AND THE CIRCUIT DESIGNATION IS SHOWN AS THE DENOMINATOR. CIRCUIT BREAKER SIZES (AMPS/NUMBER OF POLES) ARE SHOWN IN THE PANELBOARD SCHEDULE WITH THE CORRESPONDING PANELBOARD AND CIRCUIT DESIGNATION. EXAMPLE: HOME RUN TO PANELBOARD P4N-102, CIRCUITS 1, 3, 5.

GRAPHICAL REPRESENTATION OF PHASING, TYPICAL FOR ALL SYMBOLS.

EXISTING TO REMAIN
EXISTING TO BE REMOVED
NEW
ITEM TO BE REMOVED
AREA NOT IN CONTRACT

1 — REVISION NUMBER - SHOWN ON PLANS

NUMBER OF DETAIL ON SHEET
NUMBER OF SHEET WHERE DETAIL APPEARS

1 — KEYED NOTE (SEE SCHEDULE)

Room 6 — ROOM NAME AND NUMBER

PANELBOARD IDENTIFICATION

P4N-102

1. EQUIPMENT DESIGNATION:
L = LIGHTING
P = POWER
D = DISTRIBUTION
S = SWITCHBOARD
M = MOTOR CONTROL CENTER
R = RELAY PANEL

2. VOLTAGE DESIGNATION:
1 = 120/240V - 1PH
2 = 240V - 3PH
3 = 208Y/120V - 3PH
4 = 480Y/277V - 3PH
5 = 120/208 - 1PH
6 = SPECIAL

3. SYSTEM DESIGNATION:
N = NORMAL
E = EMERGENCY
C = POWER CONDITIONED
U = UNINTERRUPTIBLE POWER SOURCE

4. FLOOR DESIGNATION:
B = BASEMENT
G = GROUND
1 = FIRST FLOOR
2 = SECOND FLOOR
ETC.

5. PANEL NO. DESIGNATION:
01 = PANELBOARD #1
02 = PANELBOARD #2
03 = PANELBOARD #3
ETC.

ELECTRICAL NOTES

A. ELECTRICAL PLANS ARE INTENDED TO PROVIDE INFORMATION FOR INSTALLATION OF A COMPLETE ELECTRICALSYSTEM. PROVIDE ALL ESSENTIAL LABOR, MATERIALS & DEVICES REQUIRED TO PRODUCE A QUALITY END PRODUCT.

B. CONTRACTOR SHALL REVIEW & BECOME FAMILIAR WITH THE WORK OF ALL TRADES FOR PURPOSES OF COORDINATION AND ROUTING. CONTRACTOR SHALL PROVIDE REQUIRED PLANNING, COORDINATION AND SEQUENCING OF ELECTRICAL INSTALLATION WITH BUILDING COMPONENTS AND OTHER TRADES.

C. ALL WORK SHALL COMPLY WITH THE NATIONAL ELECTRICAL CODE (NEC). WORKMANSHIP SHALL MEET OR EXCEED INDUSTRY STANDARDS.

D. ELECTRICAL CONTRACTOR SHALL PROVIDE ALL DISCONNECTS, STARTERS, DEVICES AND ELECTRICAL COMPONENTS UNLESS SPECIFICALLY NOTED AS PROVIDED BY OTHERS.

E. ELECTRICAL CONTRACTOR SHALL PROVIDE ALL LINE AND LOAD SIDE WIRING INCLUDING ALL TERMINATIONS TO EQUIPMENT PROVIDED UNDER OTHER TRADES. POWER WIRING TO CONTROL DEVICES SHALL BE PROVIDED BY E.C.. INTERLOCK WIRING SHALL BE PROVIDED BY THE CONTRACTOR INSTALLING THE CONTROL DEVICE.

F. ALL WIRING, PANELBOARDS, DEVICES AND OTHER LIKE MATERIALS SHALL BE UL LISTED & LABELED. ALL MATERIALS SHALL MEET THE NE FOR THE INTENDED USE AND INSTALLED IN ACCORDANCE WITH THE NEC.

G. PROVIDE THHN/THWN COPPER WIRE. PROVIDE A MINIMUM WIRE SIZE OF #12. ALL WIRE #8 AND LARGER SHALL BE STRANDED. CONDUCTORS AND CONDUIT ON PLANS AND SCHEDULES REFLECT AMPACITIES PER NEC 310-16 75C RATING. CONTRACTOR SHALL VERIFY ALL TERMINATIONS, LUGS, ETC. ARE RATED FOR USE PER NEC 110-4C. OTHERWISE, PROVIDE CONDUCTOR AND CONDUIT SIZED PER LOWEST TEMPERATURE RATING OF ANY TERMINATION WITHIN A CIRCUIT. PROVIDE CABLE OR CONDUIT AND WIRE AS REQUIRED TO ACHIEVE CIRCUITING SHOWN. SIZE CONDUCTORS PER NEC AMPACITY AND WIRE FILL CRITERIA. PROVIDE DEDICATED NEUTRAL AND GROUND CONDUCTORS FOR CIRCUITING, UNLESS NOTED OTHERWISE. INCREASE BRANCH CIRCUIT AND/OR FEEDER CONDUCTORS INCLUDING EQUIPMENT GROUNDING CONDUCTORS PROPORTIONALLY FOR NO MORE THAN 3% VOLTAGE DROP ON BRANCH CIRCUITS AND 2% ON FEEDERS PER ENERGY CODE.

H. PROVIDE M.C. CABLE FOR ALL SINGLE PHASE BRANCH CIRCUITS 30 AMPS AND SMALLER. PROVIDE CONDUIT FOR ALL OTHER WIRING. EMT OR RIGID SHALL BE USED WHERE EXPOSEDTO PHYSICAL DAMAGE. CONDUIT ABOVE GRADE SHALL BE STEEL. CONDUIT BELOW GRADEMAY BE PVC CHANGING TO STEEL IN THE ELBOW TURNING UP. EMT SHALL NOT BE USED IN DIRECT CONTACT WITH THE EARTH OR WHERE EXPOSED TO SEVERE PHYSICAL DAMAGE. FITTINGS ON STEEL CONDUIT SHALL BE COMPRESSION TYPE.

I. NONMETALLIC-SHEATHED CABLE MAY BE UTILIZED WHERE COMPLIANT WITH LATEST EDITION OF THE NATIONAL ELECTRIC CODE SECTION 334. E.C. SHALL VERIFY WITH LOCAL AHJ'S THAT NONMETALLIC-SHEATHED CABLE SHALL BE ACCEPTABLE FOR USE PRIOR TO CONSTRUCTION.

J. CONDUCTORS OPERATING AT 50 VOLTS OR GREATER SHALL BE IN RACEWAY. RACEWAY WITHIN THE STRUCTURE ABOVE THE FLOOR SLAB SHALL BE METAL. RACEWAY BELOW THE FLOOR SLAB AND UNDERGROUND RACEWAY OUTSIDE THE STRUCTURE SHALL BE PVC. LOW VOLTAGE CABLES OR CONDUCTORS OPERATING AT LESS THAN 50 VOLTS SHALL BE IN METAL RACEWAY WHERE INSTALLED WITHIN WALLS OR INACCESSIBLE SPACES. LOW VOLTAGE CABLES MAY BE RUN IN CABLE TRAY WHERE NOTED. LOW VOLTAGE CABLES MAY BE RUN IN CABLE SUPPORT HOOKS ABOVE ACCESSIBLE CEILINGS WHERE NOTED. LOW VOLTAGE CABLE SHALL BE PLENUM RATED IN PLENUM SPACES.

K. PROVIDE ONE-INCH EMPTY CONDUITS EXTENDING ABOVE CEILING FOR ALL TELEPHONE AND DATA OUTLETS SHOWN ON PLANS. PROVIDE PROTECTIVE BUSHINGS ON ENDS OF CONDUIT. ALL CABLING IS PROVIDED BY OTHERS.

L. PROVIDE 3/4-INCH EMPTY CONDUITS TERMINATING ABOVE THE CEILING FOR ALL HVAC THERMOSTATS. JUNCTION BOXES SHALL MATCH ORIENTATION OF THERMOSTATS PROVIDED BY M.C.. MOUNT JUNCTION BOXES 48-INCHES A.F.F. UNLESS NOTED OTHERWISE. PROVIDE PROTECTIVE BUSHINGS ON ENDS OF CONDUIT. ALSO, PROVIDE DOUBLE GANG BOX AT 84" AFF OVER THERMOSTATS OR WHERE SHOWN ON PLANS FOR REMOTE ALARM/TEST STATIONS OF HVAC DUCT SMOKE DETECTORS (NOT REQUIRED IF CENTRAL FIRE ALARM SYSTEM EXISTS).

M. PANELBOARDS FOR SERVICE ENTRANCE SHALL BE SERVICE ENTRANCE RATED. PROVIDE NEMA 3R PANELBOARDS WHERE LOCATED OUTSIDE. PROVIDE NEUTRAL AND GROUNDING BARS IN ALL PANELBOARDS UNLESS NOTED OTHERWISE. GROUND ALL SERVICE ENTRANCE PANELS IN ACCORDANCE WITH THE NEC.

N. PROVIDE TYPEWRITTEN PANEL SCHEDULES IN EACH PANEL INDICATING THE LOAD DESCRIPTION FOR EACH BREAKER. LABEL PANELS ON PANEL FACE WITH PHENOLIC LABELS INDICATING PANEL NUMBER OR LETTER DESIGNATION, VOLTAGE AND PHASE.

O. PROVIDE FUSED AND NON-FUSED DISCONNECT SWITCHES AS INDICATED ON PLANS. DISCONNECTS LOCATED OUTSIDE SHALL BE NEMA-3R. PROVIDE REJECTION CLIPS IN FUSED DISCONNECTS.

P. PROVIDE HORSEPOWER RATED STARTERS AND DISCONNECTS WHEN CONNECTED TO MOTORS. STARTERS SHALL BE PROVIDED WITH OVERLOAD SIZED-TO-MATCH MOTOR RATINGS.

Q. PROVIDE LIGHTING AS SCHEDULED IN THE FIXTURE SCHEDULE OR OTHERWISE NOTED ON PLANS. LIGHTING INSTALLED IN SUSPENDED CEILINGS SHALL BE SUPPORTED INDEPENDENTLYOF THE CEILING GRID SYSTEM.

R. PROVIDE EMERGENCY AND EXIT LIGHTS AS SHOWN ON PLANS. POWER SHALL BE PROVIDED FROM LIGHTING CIRCUITS ON THE UNSWITCHED LEG OF THE CIRCUIT SUCH THAT POWER TO THE EMERGENCY AND EXIT LIGHTS IS NOT DISCONNECTED WHEN NORMAL LIGHTING IS OFF. EXTERIOR EMERGENCY LIGHTS SHALL BE WIRED SUCH THAT PHOTOCELL AND/OR TIME CLOCK OPERATION DOES NOT DISCONNECT POWER TO BATTERIES.

S. COORDINATE LOCATIONS OF DEVICES WITH ARCHITECTURAL ELEVATIONS AND DETAILS. ARCHITECTURAL ELEVATIONS AND DETAILS TAKE PRECEDENCE OVER LOCATIONS SHOWN ON ELECTRICAL DRAWINGS.

T. RECEPTACLES SHALL BE 20 AMP, 120V UNLESS NOTED OTHERWISE.

U. RECEPTACLES ABOVE COUNTERTOPS AND ADJACENT TO SINKS & LAVATORIES SHALL BE GROUND FAULT.

V. RECEPTACLES INSTALLED OUTSIDE SHALL BE GROUND FAULT WITH "IN USE" WEATHERPROOF COVERS.

W. WALL SWITCHES SHALL BE SINGLE POLE, 20 AMP, 120/277V.

X. PROVIDE STANDARD SIZE WALL PLATES FOR ALL DEVICES AND BLANK WALL PLATES FOR JUNCTION BOXES. WALL PLATES SHALL BE HIGH IMPACT, SMOOTH NYLON, COLOR TOMATCH DEVICE.

Y. UL LISTED DUCT SMOKE DETECTORS SHALL BE FURNISHED, INSTALLED & TESTED BY THE M.C.. THE E.C. SHALL PROVIDE 120V POWER TO EACH DUCT SMOKE DETECTOR WHERE REQUIRED. THE M.C. SHALL PROVIDE REMOTE ALARM/TEST STATIONS FOR EACH DUCT SMOKE DETECTOR.

Z. IT IS THE RESPONSIBILITY OF THIS CONTRACTOR TO COORDINATE INSTALLATION OF ELECTRICAL SYSTEMS AND THOSE REQUIRING ELECTRICAL CONNECTIONS TO MAINTAIN NEC REQUIRED CLEARANCES, INCLUDED BY NOT LIMITED TO AREAS ABOVE ACCESSIBLE CEILINGS.

AA. FIELD COORDINATE FINAL MECHANICAL AND EQUIPMENT LOCATIONS ALONG WITH CONNECTION REQUIREMENTS AND CONTROL WIRING PRIOR TO ROUGH-IN. ADJUST CORRESPONDING CIRCUIT BREAKER RATINGS AND BRANCH CIRCUITING ACCORDINGLY.

BB. THE CONTRACTOR IS RESPONSIBLE FOR MAKING FINAL WIRING TERMINATIONS TO PRE-INSTALLED RECEPTACLES IN OFFICE FURNITURE. CONTRACTOR IS RESPONSIBLE FOR WIRING AND INSTALLING VOICE/DATA DEVICES IN OFFICE FURNITURE. COORDINATE PLACEMENT OF DEVICES WITH FURNITURE LAY-OUT.

CC. SECURITY SYSTEM TO BE PROVIDED UNDER SEPARATE CONTRACT. IT IS THE RESPONSIBILITY OF THIS CONTRACTOR TO PROVIDE CONDUIT PROVISIONS, BACK BOXES, ROUGH-INS, SLEEVES AND POWER TO HEAD END EQUIPMENT FOR EXACT REQUIREMENTS PRIOR TO START OF WORK.

DD. TV OUTLETS, VOLUME CONTROLS, NURSE CALL DOME LIGHTS, NURSE CALL DEVICES, TELEPHONE OUTLETS, DATA OUTLETS, AND FIRE ALARM DEVICES SHALL CONSIST OF A BACK BOX WTIH CONDUIT STUBBED ABOVE THE ACCESSIBLE CEILING, SEE STUB UP DETAIL VERIFY SIZE OF BACK BOX REQUIRED WITH DEVICE TO BE INSTALLED. LOCATE BACK BOXES 6" FROM ADJACENT POWER RECEPTACLE INTENDED FOR COMPUTER USE.

ARCHITECT

RON W. WEBB
1659 W. HANRAHAN ROAD
AYDEN, NC. 28513
TEL: (252) 531-2711

WEBB MT PISGAH

145 PROSPECT CHURCH RD
ERWIN, NC 28339

PROJECT CONSULTANTS

KAIROS PROJECT GROUP, INC.

120 SOMMERVILLE PARK ROAD
RALEIGH, NC 27603
NC FIRM # C-3824

NORTH CAROLINA PROFESSIONAL SEAL 33293 ENGINEER BENJAMIN D. SMITH
12/09/2024

- [x] For Construction
- [ ] Not for Construction
- [ ] Review Set
- [x] Bid Set

All drawings and copies thereof are instruments of service and as such remain the property of Ron W. Webb Architect They are to be used only with respect to this project. With the exception of one complete set for each party to the contract, all copies are to be returned or accounted for to Ron W. Webb Architect upon completion of the work. None or part of these drawings may be reproduced without the express written consent of Ron W. Webb Architect. These plans are copyrighted and are subject to copyright protection as an "Architectural Work" under Sec. 102 of the Copyright Act, 17 U.S.O. as amended December 1990 and known as Architectural Works Copyright Protection Act of 1990
© COPYRIGHT 2020

Issue Date: Issue Date
Plot Date: 10/23/2023 4:26:53 PM

Revisions

Mark	Date	Description

Drawing No.

ELECTRICAL TITLE SHEET

E000

of

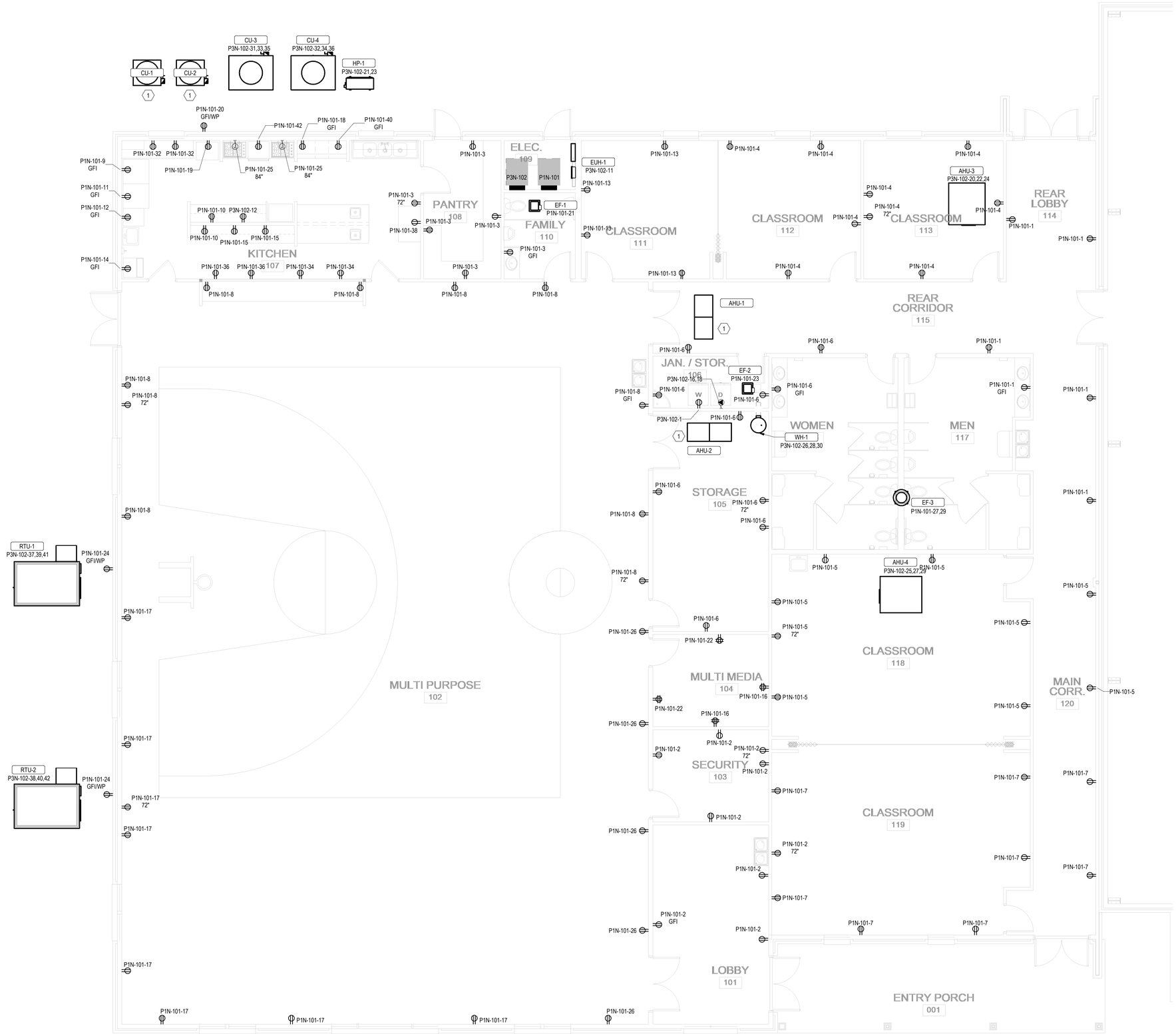

1 / E101 LEVEL 1 POWER PLAN
3/16" = 1'-0"

ARCHITECT

RON W. WEBB
1659 W. HANRAHAN ROAD
AYDEN, NC. 28513
TEL: (252) 531-2711

WEBB MT PISGAH

145 PROSPECT CHURCH RD
ERWIN, NC 28339

PROJECT CONSULTANTS

KAIROS PROJECT GROUP, INC.
120 SOMMERVILLE PARK ROAD
RALEIGH, NC 27603
NC FIRM # C-3824

NORTH CAROLINA PROFESSIONAL SEAL 33293 ENGINEER BENJAMIN D. LEWIS
12/09/2024

- [x] For Construction
- [ ] Not for Construction
- [ ] Review Set
- [x] Bid Set

All drawings and copies thereof are instruments of service and as such remain the property of Ron W. Webb Architect They are to be used only with respect to this project. With the exception of one complete set for each party to the contract, all copies are to be returned or accounted for to Ron W. Webb Architect upon completion of the work. None or part of these drawings may be reproduced without the express written consent of Ron W. Webb Architect. These plans are copyrighted and are subject to copyright protection as an "Architectural Work" under Sec. 102 of the Copyright Act, 17 U.S.O. as amended December 1990 and known as Architectural Works Copyright Protection Act of 1990
© COPYRIGHT 2020

Issue Date: Issue Date
Plot Date: 10/23/2023 4:26:55 PM

Revisions

Mark	Date	Description

Drawing No.
ELECTRICAL POWER PLAN
E101
of

KEYNOTES

1 LIGHTING IN MULTIPURPOSE AREA TO BE IMPACT RATED.

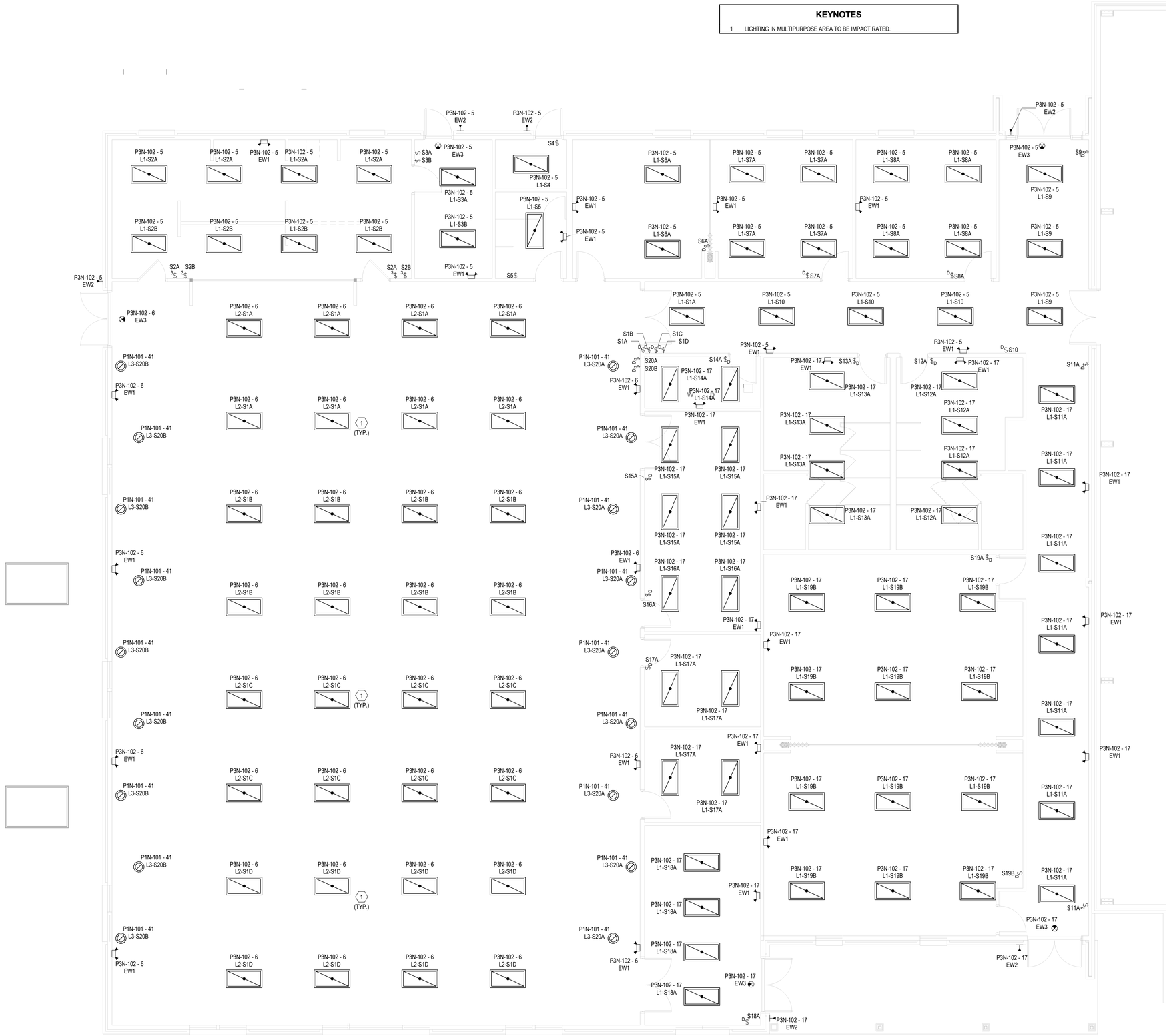

1 E201 LEVEL 1 LIGHTING PLAN
3/16" = 1'-0"

ARCHITECT

RON W. WEBB
1659 W. HANRAHAN ROAD
AYDEN, NC. 28513
TEL: (252) 531-2711

WEBB MT PISGAH

145 PROSPECT CHURCH RD
ERWIN, NC 28339

PROJECT CONSULTANTS

KAIROS PROJECT GROUP, INC.
120 SOMMERVILLE PARK ROAD
RALEIGH, NC 27603
NC FIRM # C-3824

NORTH CAROLINA PROFESSIONAL SEAL 33293 ENGINEER BENJAMIN D. LEWIS

12/09/2024

- [x] For Construction
- [ ] Not for Construction
- [ ] Review Set
- [x] Bid Set

All drawings and copies thereof are instruments of service and as such remain the property of Ron W. Webb Architect They are to be used only with respect to this project. With the exception of one complete set for each party to the contract, all copies are to be returned or accounted for to Ron W. Webb Architect upon completion of the work. None or part of these drawings may be reproduced without the express written consent of Ron W. Webb Architect. These plans are copyrighted and are subject to copyright protection as an "Architectural Work" under Sec. 102 of the Copyright Act, 17 U.S.O. as amended December 1990 and known as Architectural Works Copyright Protection Act of 1990
© COPYRIGHT 2020

Issue Date: Issue Date

Plot Date: 10/23/2023 4:26:55 PM

Revisions

Mark	Date	Description

Drawing No.

ELECTRICAL LIGHTING PLAN

E201

of

Branch Panel: P1N-101

Location: Space 226
Supply From: P3N-102
Mounting: SURFACE
Enclosure: NEMA 1

Volts: 120/208
Phases: 1
Wires: 3

A.I.C. Rating: 10,000 AMPS SYMMETRICAL
Mains Type: MAIN CB
Mains Rating: 225.0 A
MCB Rating: 225.0 A

Notes:

CKT	Circuit Description	Trip	Poles	A		B		Poles	Trip	Circuit Description	CKT
1	RCPT	20.0 A	1	1080 VA	1620 VA			1	20.0 A	RCPT	2
3	RCPT	20.0 A	1			1080 VA	1620 VA	1	20.0 A	RCPT	4
5	RCPT	20.0 A	1	1620 VA	1800 VA			1	20.0 A	RCPT	6
7	RCPT	20.0 A	1			1440 VA	1800 VA	1	20.0 A	RCPT	8
9	REFRIGERATOR (GFI)	20.0 A	1	500 VA	360 VA			1	20.0 A	KITCHEN MISC RCPTS	10
11	REFRIGERATOR (GFI)	20.0 A	1			500 VA	500 VA	1	20.0 A	FREEZER (GFI)	12
13	RCPT	20.0 A	1	720 VA	200 VA			1	20.0 A	ICE MAKER (GFI)	14
15	KITCHEN MISC RCPTS	20.0 A	1			360 VA	360 VA	1	20.0 A	RCPT	16
17	RCPT	20.0 A	1	1440 VA	1500 VA			1	20.0 A	RCPT	18
19	FOOD WARMER	20.0 A	1			1200 VA	180 VA	1	20.0 A	RCPT	20
21	EF-1	20.0 A	1	24 VA	360 VA			1	20.0 A	RCPT	22
23	EF-2,3,4	20.0 A	1			24 VA	360 VA	1	20.0 A	RCPT	24
25	RANGE HOODS	20.0 A	1	472 VA	900 VA			1	20.0 A	RCPT	26
27	EF-3	20.0 A	2			156 VA					28
29				156 VA							30
31							360 VA	1	20.0 A	KITCHEN MISC RCPTS	32
33					360 VA			1	20.0 A	KITCHEN MISC RCPTS	34
35							360 VA	1	20.0 A	KITCHEN MISC RCPTS	36
37					180 VA			1	20.0 A	KITCHEN MISC RCPTS	38
39							1500 VA	1	20.0 A	RCPT Space 228	40
41	LITES Space 239	20.0 A	1	600 VA	180 VA			1	20.0 A	RCPT Space 228	42
			Total Load:	14072 VA		11800 VA					
			Total Amps:	132.4 A		113.5 A					

Legend:

Load Classification	Connected Load	Demand Factor	Estimated Demand	Panel Totals	
HVAC	360 VA	100.00%	360 VA		
LITES	600 VA	125.00%	750 VA	**Total Conn. Load:**	25872 VA
RCPT	24912 VA	70.07%	17456 VA	**Total Est. Demand:**	18566 VA
				Total Conn.:	124.4 A
				Total Est. Demand:	89.3 A

Notes:
AIC IS ASSUMED, EC TO VERIFY BEFORE PURCHASE AND INSTALL.

Branch Panel: P3N-102

Location: Space 226
Supply From:
Mounting: SURFACE
Enclosure: NEMA 1

Volts: 208Y/120
Phases: 3
Wires: 4

A.I.C. Rating: 10,000 AMPS SYMMETRICAL
Mains Type: MAIN CB
Mains Rating: 400.0 A
MCB Rating: 400.0 A

Notes:

CKT	Circuit Description	Trip	Poles	A		B		C		Poles	Trip	Circuit Description	CKT
1	WASHER	20.0 A	1	180 VA	14072 VA					2	20.0 A	P1N-101	2
3							11800 VA						4
5	LITES	20.0 A	1					1103 VA	1156 VA	1	20.0 A	LITES	6
7													8
9													10
11	C Space 226	20.0 A	1					1500 VA	1500 VA	1	20.0 A	MICROWAVE	12
13													14
15							900 VA			2	20.0 A	DRYER	16
17	LITES	20.0 A	1					1585 VA	900 VA				18
19					555 VA					3	20.0 A	AHU-3	20
21	HP-1	20.0 A	2			1950 VA	555 VA						22
23								1950 VA	555 VA				24
25				555 VA	1000 VA								26
27	AHU-4	20.0 A	3			555 VA	1000 VA			3	20.0 A	WH-1	28
29								555 VA	1000 VA				30
31				2402 VA	2402 VA								32
33	CU-3	30.0 A	3			2402 VA	2402 VA			3	60.0 A	CU-4	34
35								2402 VA	2402 VA				36
37				10315 VA	10315 VA								38
39	RTU-1	125.0 A	3			10315 VA	10315 VA			3	125.0 A	RTU-2	40
41								10315 VA	10315 VA				42
			Total Load:	41796 VA		42194 VA		37238 VA					
			Total Amps:	354.1 A		357.5 A		310.3 A					

Legend:

Load Classification	Connected Load	Demand Factor	Estimated Demand	Panel Totals	
HVAC	83891 VA	100.00%	83891 VA		
POWER	1800 VA	100.00%	1800 VA	**Total Conn. Load:**	121227 VA
LITES	4444 VA	125.00%	5555 VA	**Total Est. Demand:**	114042 VA
HEAT	4500 VA	100.00%	4500 VA	**Total Conn.:**	336.5 A
RCPT	26592 VA	68.80%	18296 VA	**Total Est. Demand:**	316.5 A

Notes:
AIC IS ASSUMED, EC TO VERIFY BEFORE PURCHASE AND INSTALL.

LIGHTING FIXTURE SCHEDULE

	CONSTRUCTION			LIGHT SOURCE						ELECTRICAL				PRODUCT		
TYPE	DESCRIPTION	LENS/LOUVER	MOUNTING	LAMP	LUMENS DOWN	LUMENS UP	CCT	CRI	PROJECTED LIFE	BALLAST/DRIVER	VOLT	WATTS	EMERGENCY COMPONENT	MFR	Model	NOTE
EW1	ELU INDOOR, TWO HEAD	--	SURFACE WALL	LED	1100 lm	0 lm	6500 K	80	--	--	120 V	3 W	BATTERY	LITHONIA	ELM6L UVOLT LTP	EC TO INSTALL EQUAL OR EQUIVALENT.
EW2	ELU SINGLE REMOTE HEAD	--	SURFACE WALL	LED	220 lm	0 lm	6500 K	80	--	--	120 V	11 W	REMOTE BATTERY	LITHONIA	ELMRE LP220L SGL	EC TO INSTALL EQUAL OR EQUIVALENT.
EW3	EXIT SIGN, EDGE-LIT, 1-SIDED	--	CEILING	LED	0 lm	0 lm	0 K	0	--	--	120 V	5 W	BATTERY	LITHONIA	EDGR 1 R EL	EC TO INSTALL EQUAL OR EQUIVALENT.
L1	2X4 RECESSED	CURVED RIBBED	LAY-IN	LED	4000 lm	0 lm	3500 K	82	60,000 HOURS	LED DRIVER, 0-10V DIMMING, 1%	120 V	32 W	--	LITHONIA	2BLT4 40L ADP EZ1 LP835	EC TO INSTALL EQUAL OR EQUIVALENT.
L2	2X4 SUSPENDED	CURVED RIBBED	CEILING SUSPENDED	LED	4000 lm	0 lm	3500 K	82	60,000 HOURS	LED DRIVER, 0-10V DIMMING, 1%	120 V	32 W	--	LITHONIA	2BLT4 40L ADP EZ1 LP835	EC TO INSTALL EQUAL OR EQUIVALENT.
L3	14" ROUND RECESSED	FROSTED ACRYLIC	RECESSED	LED	2040 lm	0 lm	3500 K	80	30,000 HOURS	LED DRIVER	120 V	30 W	--	LITHONIA	FMHLDL 14 208 35K	EC TO INSTALL EQUAL OR EQUIVALENT.

ARCHITECT

RON W. WEBB
1659 W. HANRAHAN ROAD
AYDEN, NC. 28513
TEL: (252) 531-2711

WEBB MT PISGAH

145 PROSPECT CHURCH RD
ERWIN, NC 28339

PROJECT CONSULTANTS

KAIROS PROJECT GROUP, INC.

120 SOMMERVILLE PARK ROAD
RALEIGH, NC 27603
NC FIRM # C-3824

NORTH CAROLINA PROFESSIONAL SEAL 33293 ENGINEER BENJAMIN D. SMITH

12/09/2024

☒ For Construction
☐ Not for Construction
☐ Review Set
☒ Bid Set

All drawings and copies thereof are instruments of service and as such remain the property of Ron W. Webb Architect They are to be used only with respect to this project. With the exception of one complete set for each party to the contract, all copies are to be returned or accounted for to Ron W. Webb Architect upon completion of the work. None or part of these drawings may be reproduced without the express written consent of Ron W. Webb Architect. These plans are copyrighted and are subject to copyright protection as an "Architectural Work" under Sec. 102 of the Copyright Act, 17 U.S.O. as amended December 1990 and known as Architectural Works Copyright Protection Act of 1990
© COPYRIGHT 2020

Issue Date: Issue Date
Plot Date: 10/23/2023 4:26:57 PM

Revisions

Mark	Date	Description

Drawing No.

ELECTRICAL SCHEDULES

E301

of

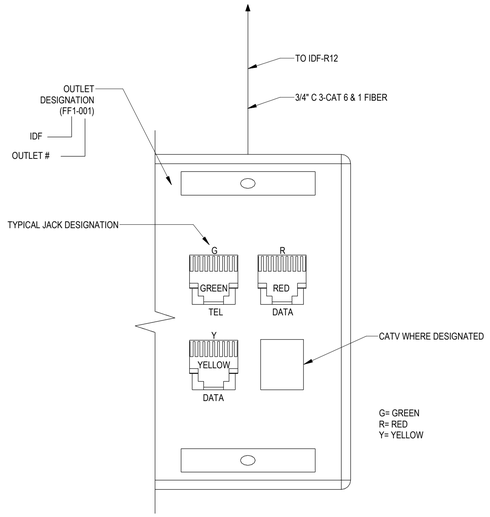

1 / E401 TYPICAL TELEPHONE/DATA DEVICE DETAIL 4 PORT
NOT TO SCALE

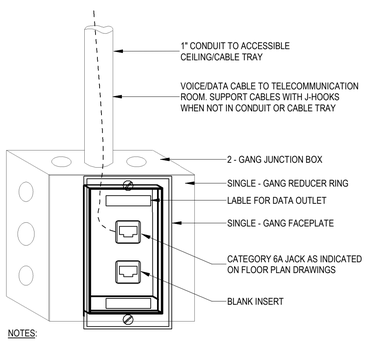

NOTES:

1. TERMINATE VOICE AND DATA OUTLETS WITH T568B/T568A PIN-OUT SEQUENCE.
2. ROUTE CABLES TO TELECOMMUNICATION ROOMS AND TERMINATE ON RACK-MOUNTED CATEGORY 6A PATCH PANELS.
3. LABEL VOICE AND DATA JACK WITH THE TELECOMMUNICATION ROOM NUMBER, PATCH PANEL NUMBER AND JACK POSITION NUMBER (EX. 005-A-18)
4. INSTALL BLANK INSERT ON OPEN PORTS WHEN JACKS ARE NOT INSTALLED.
5. WHEN VOICE/DATA OUTLETS ARE INSTALLED AT MODULAR FURNITURE OR FLOOR BOX LOCATIONS, PROVIDED COMPATIBLE ADAPTER PLATES.

ENGINEER EDIT NOTE: VERIFY CABLE TYPE AND REVISE DETAIL AS REQUIRED.

2 / E401 2-PORT SINGLE DROP VOICE/DATA OUTLET DETAIL
NOT TO SCALE

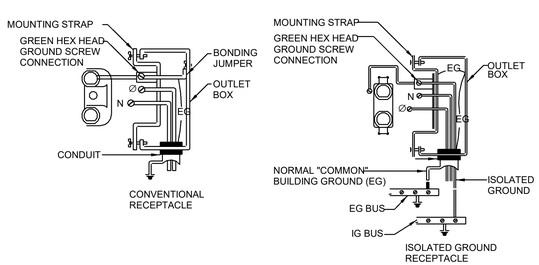

4 / E401 RECEPTACLE WIRING DETAILS
NOT TO SCALE

CONDUIT AND WIRE SCHEDULE

FEEDER TYPE	COPPER CONDUCTORS		CONDUIT SIZE			
	Ø & N	GND	2Ø+N+GND	3Ø+GND	3Ø+N+GND	3Ø+2N+2GND
20	#12	#12	16 (1/2")	16 (1/2")	16 (1/2")	21 (3/4")
30	#10	#10	16 (1/2")	16 (1/2")	21 (3/4")	21 (3/4")
40	#8	#10	21 (3/4")	21 (3/4")	27 (1")	27 (1")
55	#6	#10	27 (1")	27 (1")	27 (1")	27 (1")
70	#4	#8	35 (1 1/4")	35 (1 1/4")	35 (1 1/4")	35 (1 1/4")
85	#3	#8	35 (1 1/4")	35 (1 1/4")	35 (1 1/4")	41 (1 1/2")
95	#2	#8	35 (1 1/4")	35 (1 1/4")	41 (1 1/2")	41 (1 1/2")
110	#1	#6	41 (1 1/2")	41 (1 1/2")	41 (1 1/2")	53 (2")
150	#1/0	#6	41 (1 1/2")	41 (1 1/2")	53 (2")	53 (2")
175	#2/0	#6	53 (2")	53 (2")	53 (2")	63 (2 1/2")
200	#3/0	#6	53 (2")	53 (2")	53 (2")	63 (2 1/2")
230	#4/0	#4	53 (2")	53 (2")	63 (2 1/2")	63 (2 1/2")
255	250 kCM	#4	63 (2 1/2")	63 (2 1/2")	63 (2 1/2")	78 (3")
285	300 kCM	#4	63 (2 1/2")	78 (3")	78 (3")	78 (3")
310	350 kCM	#3	78 (3")	78 (3")	78 (3")	91 (3 1/2")
335	400 kCM	#3	78 (3")	78 (3")	78 (3")	91 (3 1/2")
380	500 kCM	#3	78 (3")	78 (3")	91 (3 1/2")	103 (4")
510	(2) 250 kCM	(2) #1	(2) 63 (2 1/2")	(2) 63 (2 1/2")	(2) 78 (3")	(2) 78 (3")
570	(2) 300 kCM	(2) #1	(2) 63 (2 1/2")	(2) 63 (2 1/2")	(2) 78 (3")	(2) 91 (3 1/2")
620	(2) 350 kCM	(2) #1	(2) 78 (3")	(2) 78 (3")	(2) 78 (3")	(2) 91 (3 1/2")
760	(2) 500 kCM	(2) #1/0	(2) 78 (3")	(2) 78 (3")	(2) 91 (3 1/2")	(2) 103 (4")
1005	(3) 400 kCM	(3) #2/0	(3) 78 (3")	(3) 78 (3")	(3) 78 (3")	(3) 91 (3 1/2")
1240	(4) 350 kCM	(4) #3/0	(4) 78 (3")	(4) 78 (3")	(4) 78 (3")	(4) 91 (3 1/2")
1260	(3) 600 kCM	(3) #3/0	(3) 91 (3 1/2")	(3) 91 (3 1/2")	(3) 103 (4")	(3) 129 (5")
1675	(5) 400 kCM	(5) #4/0	(5) 78 (3")	(5) 78 (3")	(5) 91 (3 1/2")	(5) 103 (4")
1680	(4) 600 kCM	(4) #4/0	(4) 91 (3 1/2")	(4) 91 (3 1/2")	(4) 103 (4")	(4) 129 (5")
2010	(6) 400 kCM	(6) 250 kCM	(6) 78 (3")	(6) 78 (3")	(6) 91 (3 1/2")	(6) 103 (4")
2100	(5) 600 kCM	(5) 250 kCM	(5) 91 (3 1/2")	(5) 91 (3 1/2")	(5) 103 (4")	(5) 129 (5")
2520	(6) 600 kCM	(6) 350 kCM	(6) 91 (3 1/2")	(6) 91 (3 1/2")	(6) 103 (4")	(6) 129 (5")
2660	(7) 500 kCM	(7) 350 kCM	(7) 91 (3 1/2")	(7) 91 (3 1/2")	(7) 91 (3 1/2")	(7) 129 (5")
3040	(8) 500 kCM	(8) 400 kCM	(8) 91 (3 1/2")	(8) 91 (3 1/2")	(8) 91 (3 1/2")	(8) 129 (5")
4275	(8) 750 kCM	(8) 500 kCM	(8) 103 (4")	(8) 103 (4")	(8) 129 (5")	(8) 129 (5")
EQ	EQUIPMENT FEEDER - REFER TO ELECTRICAL EQUIPMENT SCHEDULE					

200 - 4 - 1G FEEDER DESIGNATION

- GROUND CONDUCTORS:
  - (0) - NO GROUND
  - (1G) - EQUIPMENT GND OR ISOLATED GND
  - (2G) - EQUIPMENT GND AND ISOLATED GND
- SYSTEM DESCRIPTION:
  - (3) - 1Ø, 3W OR 3Ø, 3W
  - (4) - 3Ø, 4W
  - (5) - 3Ø, 5W (2 NEUTRALS)
- CONDUCTOR AMPACITY:
  - (SEE FEEDER SCHEDULE)

GENERAL NOTES:

A. THE ABOVE FEEDER SCHEDULE IS A SCHEDULE OF TYPICAL FEEDERS AND SOME SIZES MAY NOT BE UTILIZED.

B. ALL CONDUCTOR AMPACITIES ARE BASED ON TABLE 310-15(b)(16) OF THE NEC FOR COPPER CONDUCTOR TYPE THW/THWN.

C. FEEDER SIZES SHOWN ON THE RISER DIAGRAM INDICATE FEEDER AMPACITIES AND DO NOT NECESSARILY CORRESPOND TO CIRCUIT BREAKER AMPACITIES. CERTAIN FEEDERS MAY BE SIZED FOR THE DERATION FACTORS REQUIRED BY CODE AND/OR ARE OVERSIZED FOR VOLTAGE DROP.

D. WHERE MULTIPLE CONDUITS AND CONDUCTORS ARE INDICATED FOR A SINGLE FEEDER, EACH CONDUIT SHALL CONTAIN 1 PARALLEL PHASE, NEUTRAL, AND GROUND CONDUCTORS INDICATED.

E. CONDUIT ABOVE GRADE INDOORS SHALL BE EMT. CONDUIT ABOVE GRADE OUTDOORS SHALL BE GALVANIZED IMC OR RMC. CONDUIT BELOW GRADE SHALL BE PVC WITH GALVANIZED RMC ELBOWS. CONDUIT SIZE INDICATED IS MINIMUM SIZE REGARDLESS OF CONDUIT TYPE.

F. CONDUITS SIZED LARGER THAN INDICATED SHALL BE PERMITTED FOR RUNS WITH UP TO (4) 90° ELBOWS, OR FOR PULLING LONGER RUNS.

5 / E401 CONDUIT AND WIRE SCHEDULE
NOT TO SCALE

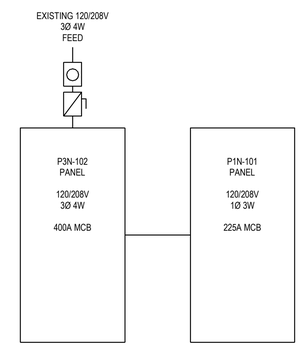

3 / E401 POWER RISER
NOT TO SCALE

TYPICAL MOUNTING HEIGHTS

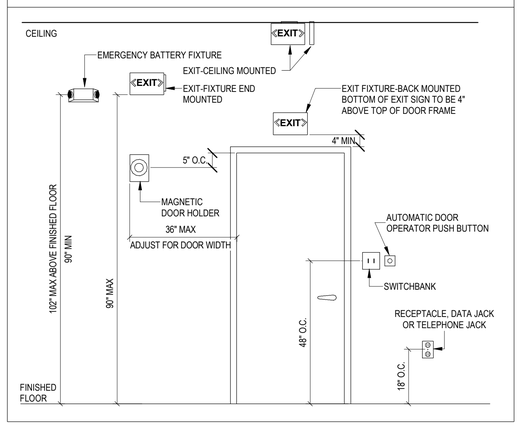

6 / E401 TYPICAL MOUNTING HEIGHTS
NOT TO SCALE

ARCHITECT

RON W. WEBB
1659 W. HANRAHAN ROAD
AYDEN, NC. 28513
TEL: (252) 531-2711

WEBB MT PISGAH

145 PROSPECT CHURCH RD
ERWIN, NC 28339

PROJECT CONSULTANTS

KAIROS PROJECT GROUP, INC.
120 SOMMERVILLE PARK ROAD
RALEIGH, NC 27603
NC FIRM # C-3824

NORTH CAROLINA PROFESSIONAL SEAL 33293 ENGINEER BENJAMIN D. LEWIS

12/09/2024

- [x] For Construction
- [ ] Not for Construction
- [ ] Review Set
- [x] Bid Set

All drawings and copies thereof are instruments of service and as such remain the property of Ron W. Webb Architect They are to be used only with respect to this project. With the exception of one complete set for each party to the contract, all copies are to be returned or accounted for to Ron W. Webb Architect upon completion of the work. None or part of these drawings may be reproduced without the express written consent of Ron W. Webb Architect. These plans are copyrighted and are subject to copyright protection as an "Architectural Work" under Sec. 102 of the Copyright Act, 17 U.S.O. as amended December 1990 and known as Architectural Works Copyright Protection Act of 1990

© COPYRIGHT 2020

Issue Date: Issue Date

Plot Date: 10/23/2023 4:26:59 PM

Revisions

Mark	Date	Description

Drawing No.

ELECTRICAL DETAILS

E401

of

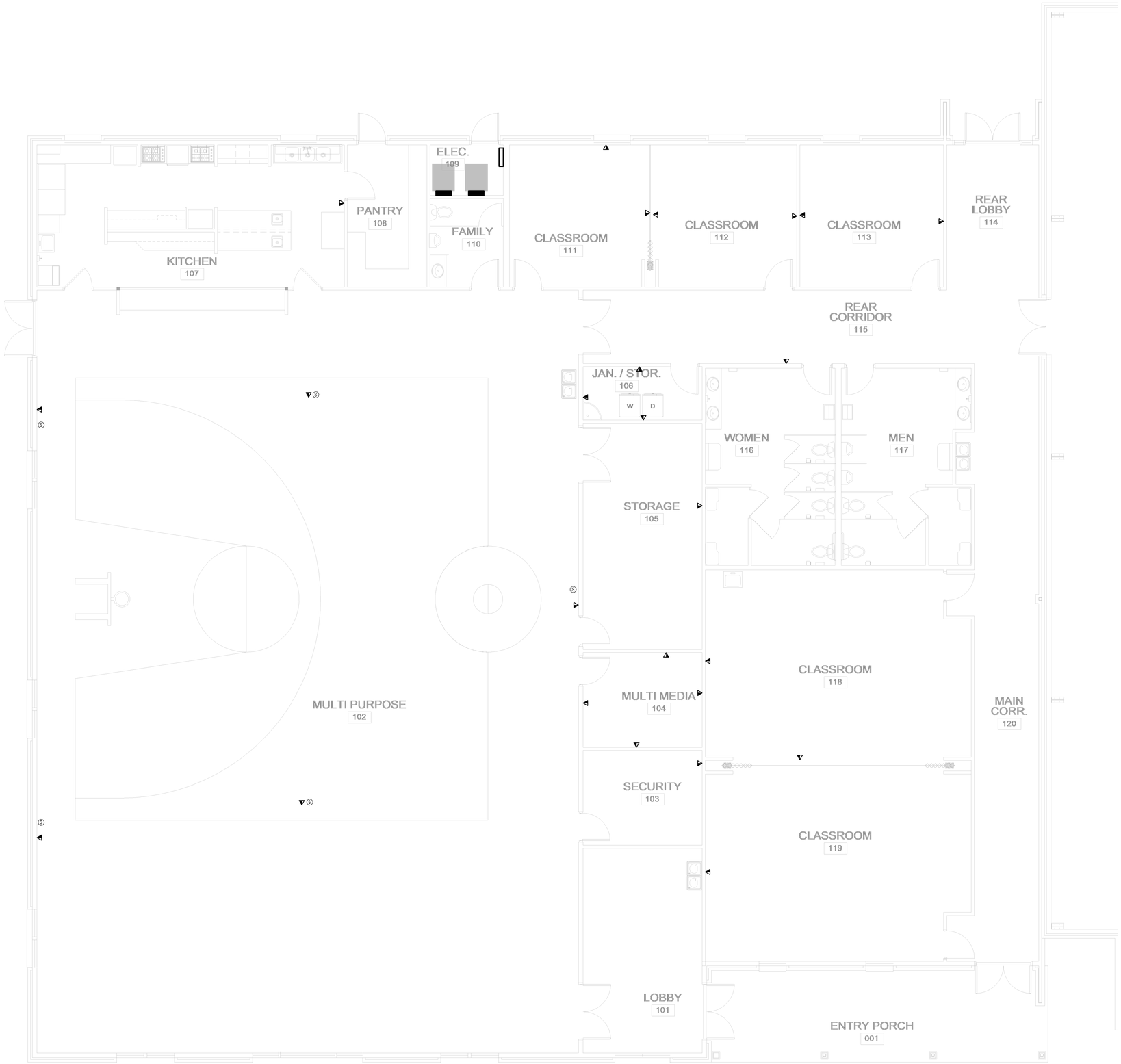

1 E501 SYSTEMS PLAN
3/16" = 1'-0"

ARCHITECT

RON W. WEBB
1659 W. HANRAHAN ROAD
AYDEN, NC. 28513
TEL: (252) 531-2711

WEBB MT PISGAH

145 PROSPECT CHURCH RD
ERWIN, NC 28339

PROJECT CONSULTANTS

KAIROS PROJECT GROUP, INC.
120 SOMMERVILLE PARK ROAD
RALEIGH, NC 27603
NC FIRM # C-3824

NORTH CAROLINA PROFESSIONAL SEAL 33293 ENGINEER BENJAMIN D. SMITH
12/09/2024

- [x] For Construction
- [ ] Not for Construction
- [ ] Review Set
- [x] Bid Set

All drawings and copies thereof are instruments of service and as such remain the property of Ron W. Webb Architect They are to be used only with respect to this project. With the exception of one complete set for each party to the contract, all copies are to be returned or accounted for to Ron W. Webb Architect upon completion of the work. None or part of these drawings may be reproduced without the express written consent of Ron W. Webb Architect. These plans are copyrighted and are subject to copyright protection as an "Architectural Work" under Sec. 102 of the Copyright Act, 17 U.S.O. as amended December 1990 and known as Architectural Works Copyright Protection Act of 1990
© COPYRIGHT 2020

Issue Date: Issue Date
Plot Date: 10/23/2023 4:27:01 PM
Revisions

Mark	Date	Description

Drawing No.
ELECTRICAL SYSTEMS PLAN
E501
of

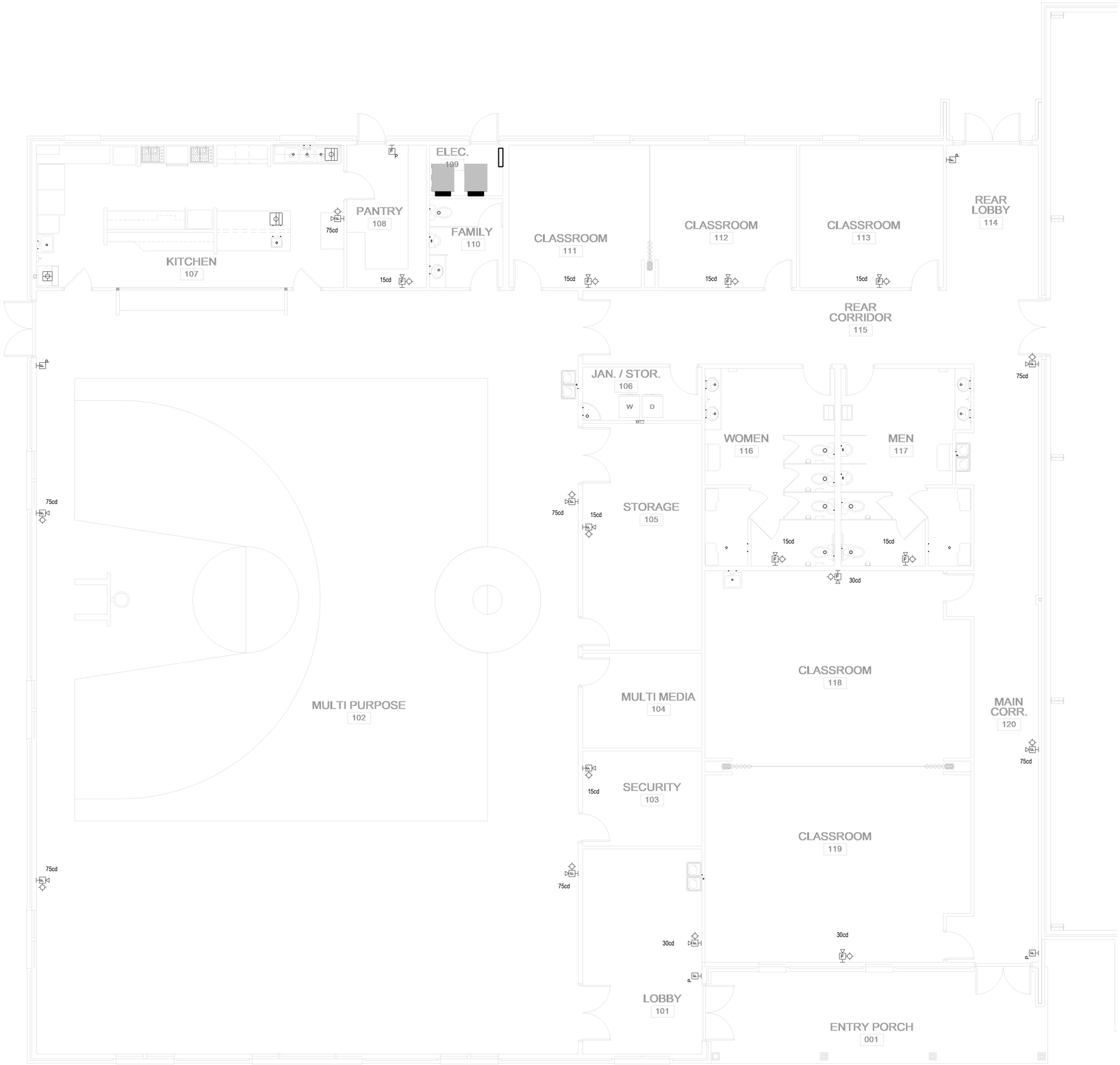

1 E601 FIRE ALARM PLAN
3/16" = 1'-0"

ARCHITECT

RON W. WEBB
1659 W. HANRAHAN ROAD
AYDEN, NC. 28513
TEL: (252) 531-2711

WEBB MT PISGAH

145 PROSPECT CHURCH RD
ERWIN, NC 28339

PROJECT CONSULTANTS

KAIROS PROJECT GROUP, INC.
120 SOMMERVILLE PARK ROAD
RALEIGH, NC 27603
NC FIRM # C-3824

NORTH CAROLINA PROFESSIONAL SEAL 33293 ENGINEER BENJAMIN D. LEWIS
12/09/2024

- [x] For Construction
- [ ] Not for Construction
- [ ] Review Set
- [x] Bid Set

All drawings and copies thereof are instruments of service and as such remain the property of Ron W. Webb Architect They are to be used only with respect to this project. With the exception of one complete set for each party to the contract, all copies are to be returned or accounted for to Ron W. Webb Architect upon completion of the work. None or part of these drawings may be reproduced without the express written consent of Ron W. Webb Architect. These plans are copyrighted and are subject to copyright protection as an "Architectural Work" under Sec. 102 of the Copyright Act, 17 U.S.O. as amended December 1990 and known as Architectural Works Copyright Protection Act of 1990
© COPYRIGHT 2020

Issue Date: Issue Date
Plot Date: 10/23/2023 4:27:03 PM
Revisions

Mark	Date	Description

Drawing No.
FIRE ALARM PLAN
E601
of

FIRE ALARM SYSTEM INPUT/OUTPUT MATRIX

SYSTEM OUTPUTS

		FACP ANNUNCIATION						NOTIFICATION				REQUIRED FIRE SAFETY CONTROL													
	SYSTEM INPUTS	A ACTUATE COMMON ALARM SIGNAL INDICATOR	B ACTUATE AUDIBLE ALARM SIGNAL	C ACTUATE COMMON SUPERVISORY SIGNAL INDICATOR	D ACTUATE AUDIBLE SUPERVISORY SIGNAL	E ACTUATE COMMON TROUBLE SIGNAL INDICATOR	F ACTUATE AUDIBLE TROUBLE SIGNAL	G ACTUATE ZONE OR DEVICE ADDRESS ALARM INDICATOR	H ACTUATE GENERAL EVACUATION SIGNAL	I DISPLAY CHANGE OF STATUS	J TRANSMIT FIRE ALARM SIGNAL TO CENTRAL STATION	K TRANSMIT SUPERVISORY SIGNAL TO CENTRAL STATION	L TRANSMIT TROUBLE SIGNAL TO CENTRAL STATION	M SHUT DOWN RESPECTIVE AIR HANDLING EQUIPMENT	N	O	P	Q	R	S	T	U	V	W	X	Y	
1	FIRE ALARM SYSTEM AC POWER FAILURE			●	●							●														1
2	FIRE ALARM SYSTEM LOW BATTERY					●	●						●													2
3	OPEN CIRCUIT					●	●						●													3
4	GROUND FAULT					●	●						●													4
5	NOTIFICATION APPLIANCE CIRCUIT SHORT					●	●						●													5
6	BUILDING MANUAL PULL STATIONS	●	●					●	●	●	●															6
7	CORRIDOR SMOKE DETECTORS	●	●					●	●	●	●															7
8	AREA SMOKE DETECTORS	●	●					●	●	●	●															8
9	HVAC AIR DUCT SMOKE DETECTORS			●	●			●				●		●												9
10	SPRINKLER TAMPER SWITCH			●	●			●				●														10
11	SPRINKLER WATER FLOW IN BUILDING	●	●					●	●	●	●															11
12	SPRINKLER WATER FLOW IN ELEV EQUIP RM OR SHAFT	●	●					●	●	●	●															12
13		●	●					●	●	●	●															13
14																										14
		A	B	C	D	E	F	G	H	I	J	K	L	M	N	O	P	Q	R	S	T	U	V	W	V	W

1 / E602 FIRE ALARM MATRIX
NOT TO SCALE

TYPICAL MOUNTING HEIGHTS

VISUAL MOUNTING APPLIANCE MOUNTING HEIGHT IN SLEEPING ROOMS:
1. MINIMUM DISTANCE IN SLEEPING ROOMS IS 24" FROM CEILING TO THE TOP OF LENS FOR 110cd STROBES WITHIN 16' OF PILLOW
2. 177cd STROBES, USED IN SLEEPING ROOMS, CAN BE WITHIN THE 24" MINIMUM DISTANCE FROM THE CEILING, THE HIGHER INTENSITY IS TO COMPENSATE FOR A POSSIBLE SMOKE LAYER

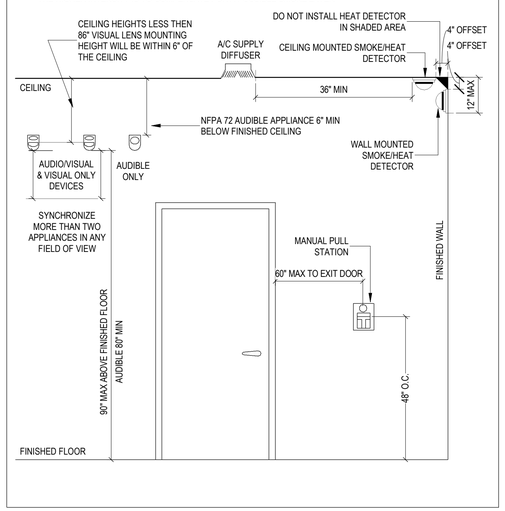

2 / E602 TYPICAL MOUNTING HEIGHTS
NOT TO SCALE

SEE FIRE ALARM SHOP DRAWING FOR NUMBER OF LOOPS REQUIRED TO SUPPORT HORN/STROBE CURRENT DRAW.

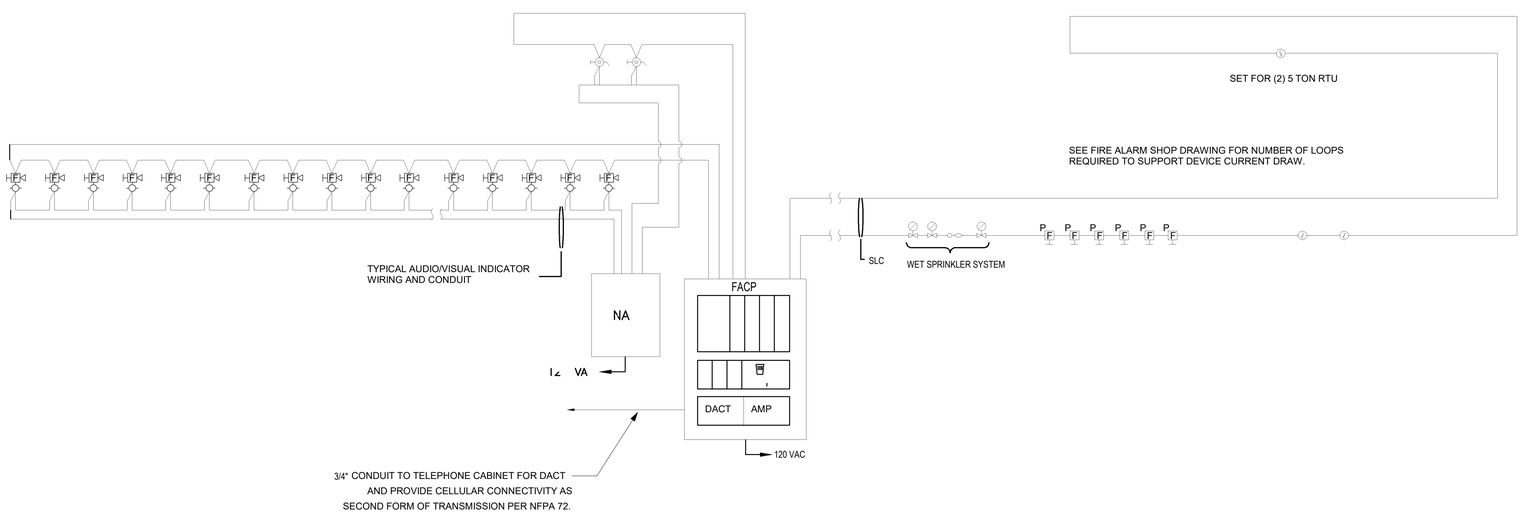

FIRE ALARM SYMBOLS

- FIRE ALARM HORN W/STROBE
- FIRE ALARM SPEAKER W/STROBE
- FIRE ALARM BELL W/STROBE
- FIRE ALARM CHIME W/STROBE
- FIRE ALARM DOOR HOLDER
- FIRE ALARM DOOR CLOSER
- FIRE ALARM SHUT DOWN RELAY
- SPRINKLER FLOW SWITCH
- SPRINKLER VALVE TAMPER SWITCH
- THERMAL DETECTOR
- DUCT SMOKE DETECTOR
- CEILING SMOKE DETECTOR
- FIRE ALARM PULL STATION
- REMOTE ANNUNCIATOR PANEL

REFER TO FIRE ALARM SHOP DRAWINGS FOR MAKE/MODEL OF DEVICES.

3 / E602 FIRE ALARM RISER
NOT TO SCALE

ARCHITECT

RON W. WEBB
1659 W. HANRAHAN ROAD
AYDEN, NC. 28513
TEL: (252) 531-2711

WEBB MT PISGAH

145 PROSPECT CHURCH RD
ERWIN, NC 28339

PROJECT CONSULTANTS

KAIROS PROJECT GROUP, INC.
120 SOMMERVILLE PARK ROAD
RALEIGH, NC 27603
NC FIRM # C-3824

NORTH CAROLINA PROFESSIONAL SEAL 33293 ENGINEER BENJAMIN D. SMITH
12/09/2024

- [x] For Construction
- [ ] Not for Construction
- [ ] Review Set
- [x] Bid Set

All drawings and copies thereof are instruments of service and as such remain the property of Ron W. Webb Architect They are to be used only with respect to this project. With the exception of one complete set for each party to the contract, all copies are to be returned or accounted for to Ron W. Webb Architect upon completion of the work. None or part of these drawings may be reproduced without the express written consent of Ron W. Webb Architect. These plans are copyrighted and are subject to copyright protection as an "Architectural Work" under Sec. 102 of the Copyright Act, 17 U.S.O. as amended December 1990 and known as Architectural Works Copyright Protection Act of 1990
© COPYRIGHT 2020

Issue Date: Issue Date
Plot Date: 10/23/2023 4:27:05 PM
Revisions

Mark	Date	Description

Drawing No.
FIRE ALARM DETAILS
E602
of

ROOM FINISH SCHEDULE

No.	NAME	FLOOR	BASE	WALLS	CEILING	HT.	REMARKS
001	ENTRY PORCH	EXPOSED CONC.	N/A	N/A	VENTED VINYL	11'-0"	BROOM FINISH CONC.
101	LOBBY	VCT	4" RUBBER	PAINTED GWB	2x2 AC. TILE	10'-0"	
102	MULTI PURPOSE	VCT	4" RUBBER	PAINTED GWB	2x2 AC. TILE	SLOPED	
103	SECURITY	CARPET	4" RUBBER	PAINTED GWB	2x2 AC. TILE	10'-0"	
104	MULTI MEDIA	CARPET	4" RUBBER	PAINTED GWB	2x2 AC. TILE	10'-0"	
105	STORAGE	VCT	4" RUBBER	PAINTED GWB	2x2 AC. TILE	10'-0"	
106	JAN. / STORAGE	VCT	4" RUBBER	PAINTED GWB	2x2 AC. TILE	10'-0"	
107	KITCHEN	VCT	4" RUBBER	PAINTED GWB	2x2 AC. TILE	10'-0"	FRP PANELS 6'-0" HIGH, EPOXY PAINT ABOVE
108	PANTRY	VCT	4" RUBBER	PAINTED GWB	2x2 AC. TILE	10'-0"	
109	ELECTRIC	EXPOSED CONC.	4" RUBBER	PAINTED GWB	PAINTED GWB	16'-0"	
110	FAMILY TOILET	VCT	4" RUBBER	PAINT & TILE	2x2 AC. TILE	10'-0"	TILE TO 7'-0" HIGH, EPOXY PAINT ABOVE
111	CLASSROOM	CARPET	4" RUBBER	PAINTED GWB	2x2 AC. TILE	10'-0"	
112	CLASSROOM	CARPET	4" RUBBER	PAINTED GWB	2x2 AC. TILE	10'-0"	
113	CLASSROOM	CARPET	4" RUBBER	PAINTED GWB	2x2 AC. TILE	10'-0"	
114	REAR LOBBY	VCT	4" RUBBER	PAINTED GWB	2x2 AC. TILE	10'-0"	
115	REAR CORRIDOR	VCT	4" RUBBER	PAINTED GWB	2x2 AC. TILE	10'-0"	
116	WOMEN	CERAMIC TILE	CERAMIC TILE	PAINT & TILE	2x2 AC. TILE	10'-0"	TILE TO 7'-0" HIGH, EPOXY PAINT ABOVE
117	MEN	CERAMIC TILE	CERAMIC TILE	PAINT & TILE	2x2 AC. TILE	10'-0"	TILE TO 7'-0" HIGH, EPOXY PAINT ABOVE
118	CLASSROOM	CARPET	4" RUBBER	PAINTED GWB	2x2 AC. TILE	10'-0"	
119	CLASSROOM	CARPET	4" RUBBER	PAINTED GWB	2x2 AC. TILE	10'-0"	
120	MAIN CORRIDOR	VCT	4" RUBBER	PAINTED GWB	2x2 AC. TILE	10'-0"	

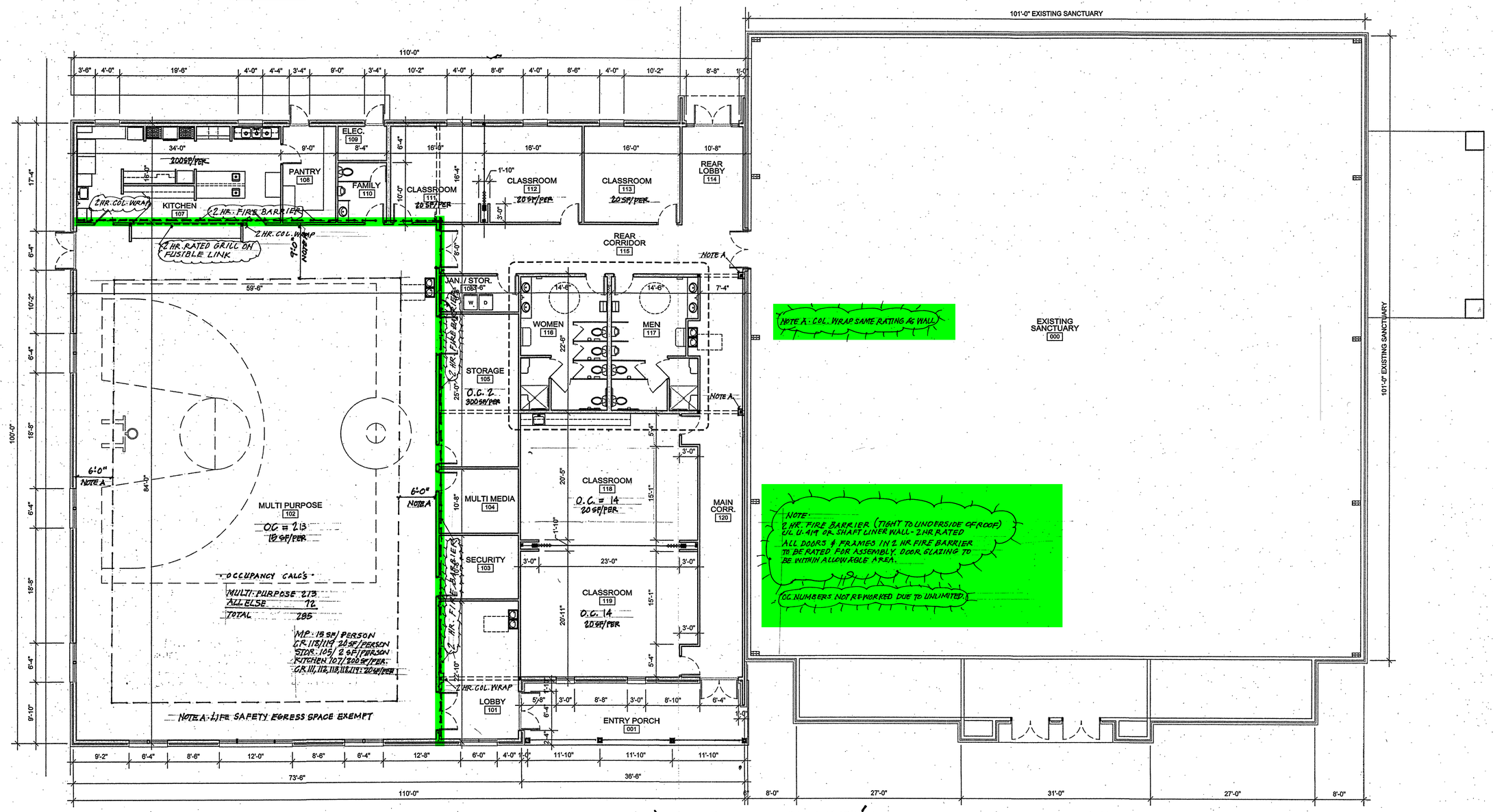

'OCCUPANT CONTENT'

OVERALL FLOOR PLAN

SCALE; 1/8" = 1'-0"

ARCHITECT

RON W. WEBB
1659 W. HANRAHAN ROAD
AYDEN, NC. 28513
TEL: (252) 531-2711

Ministries Activity Center Addition Mount Pisgah Harnett Original Free Will Baptist Church

145 Prospect Church Road
Erwin, NC.

PROJECT CONSULTANTS

KAIROS PROJECT GROUP, INC.
CONSULTING ENGINEERS
555 FAYETTEVILLE STREET | SUITE 201
RALEIGH, NC 27601 | 919-719-3475
WWW.KPGNC.COM | NC FIRM #: C-3824

STRUCTURAL

NEVILLE ENGINEERING
AUGUSTUS NEVILLE, PE
100-B CULBRETH RD.
CHAPEL HILL, NC 27516
TEL: (919) 740-3427

RON W. WEBB REGISTERED ARCHITECT 3114 9-16-2024 NORTH CAROLINA GREENVILLE, NC

- ☐ ~~PRELIM~~
- ☒ For Construction
- ☐ Not for Construction
- ☒ Review Set
- ☐ Bid Set

All drawings and copies thereof are instruments of service and as such remain the property of Ron W. Webb Architect They are to be used only with respect to this project. With the exception of one complete set for each party to the contract, all copies are to be returned or accounted for to Ron W. Webb Architect upon completion of the work. None or part of these drawings may be reproduced without the express written consent of Ron W. Webb Architect. These plans are copyrighted and are subject to copyright protection as an "Architectural Work" under Sec. 102 of the Copyright Act, 17 U.S.O. as amended December 1990 and known as Architectural Works Copyright Protection Act of 1990
© COPYRIGHT 2020

Issue Date: 09/20/2023

Plot Date:

Revisions

Mark	Date	Description

Drawing No.

'OCCUPANT CONTENT'

OVERALL FLOOR PLAN **A-5**

of

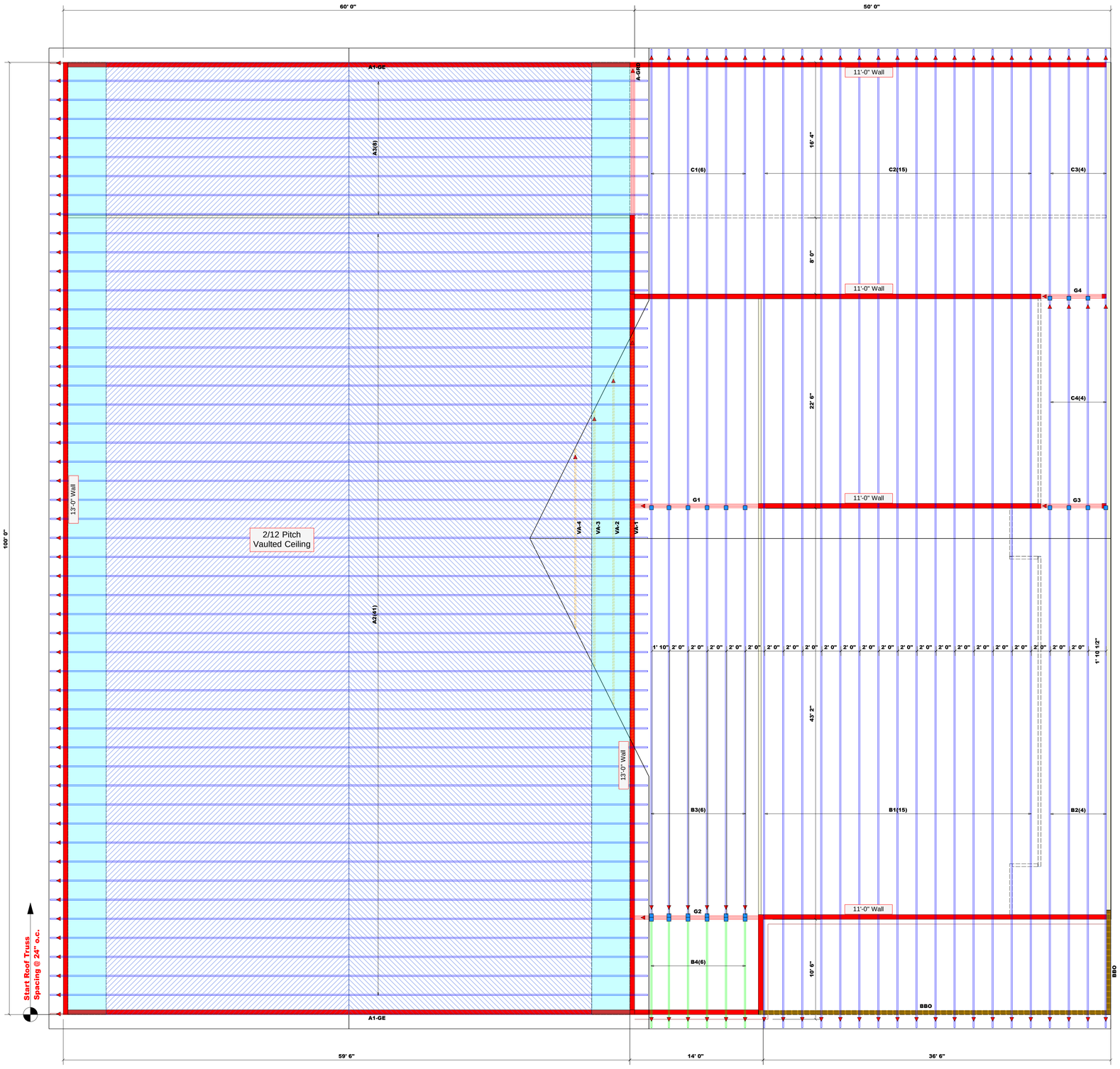

Truss Placement Plan
SCALE: 3/16" = 1'-0"

Dimension Notes
1. All exterior wall to wall dimensions are to face of stud unless noted otherwise
2. All interior wall dimensions are to face of stud unless noted otherwise
3. All exterior wall to truss dimensions are to face of stud unless noted otherwise

All Walls Shown Are Considered Load Bearing

▲ = Indicates Left End of Truss
(Reference Engineered Truss Drawing)
Do Not Erect Trusses Backwards

Roof Area	= 11891.82 sq.ft.
Ridge Line	= 164 ft.
Hip Line	= 0 ft.
Horiz. OH	= 253 ft.
Raked OH	= 290.97 ft.
Decking	= 409 sheets

Connector Information					Nail Information	
Sym	Product	Manuf	Qty	Supported Member	Header	Truss
	HUS26	USP	25	NA	16d/3-1/2"	16d/3-1/2"

comTECH
ROOF & FLOOR
TRUSSES & BEAMS
Reilly Road Industrial Park
Fayetteville, N.C. 28309
Phone: (910) 864-8787
Fax: (910) 864-4444

THIS IS A TRUSS PLACEMENT DIAGRAM ONLY. These trusses are designed as individual building components to be incorporated into the building design at the specification of the building designer. See individual design for top chord and bottom chord bracing on the placement drawing. The building designer is responsible for temporary and permanent bracing of the roof and floor system and for the overall structure. The design of the truss support structure including headers, beams, walls, and columns is the responsibility of the building designer. For more information regarding bracing, consult BCSI-B1 and BCSI-B2 available from the truss delivery package or online @ sbcindustry.com

Bearing reactions less than or equal to 3000# are deemed to comply with the prescriptive Code requirements. The contractor shall refer to the attached Tables (derived from the prescriptive Code requirements) to determine the minimum foundation and jack stud size of wood stud required to support reactions greater than 3000# but not greater than 15000#. A registered design professional shall be retained to design the support system for any reaction that exceeds those specified in the attached Tables. A registered design professional shall be retained to design the support system for all reactions that exceed 15000#.

Signature Anthony Williams

Anthony Williams

CITY / CO.	Erwin / Harnett
ADDRESS	145 Prospect Church Rd.
MODEL	Roof
DATE REV.	2/12/25
DRAWN BY	Anthony Williams
SALES REP.	Anthony Williams
BUILDER	STE General Contractors
JOB NAME	Mt Pisgah Church
PLAN	Ministries Activity Center
SEAL DATE	9/16/24
QUOTE #	B0124-0243
JOB #	J0225-0815

LOAD CHART FOR JACK STUDS

(BASED ON TABLES R502.5(1) & (3))

NUMBER OF JACK STUDS REQUIRED @ EA END OF HEADER/GIRDER

END REACTION (LBS/FT)	REQ'D STUDS FOR (2) 1X'S HEADER	END REACTION (LBS/FT)	REQ'D STUDS FOR (3) 1X'S HEADER	END REACTION (LBS/FT)	REQ'D STUDS FOR (4) 1X'S HEADER
1700	1	2550	1	3400	1
3400	2	5100	2	6800	2
5100	3	7650	3	10200	3
6800	4	10200	4	13600	4
8500	5	12750	5	17000	5
10200	6	15300	6		
11900	7				
13600	8				
15300	9				

Architect

Ron Ward Webb

1659 W. Hanrahan Road
Ayden, NC, 28513
Tel: (252) 606-7860
Email: Wgarryowen@cs.com

To: **Mr. Brad Sutton, Code Enforcement Officer, Harnett County Inspections**
From: **Ron Ward Webb, Architect**
Date: **March 10, 2025**
Re: **Mount Pisgah Harnett OFWB Church**

Mr. Sutton

Thank you for your most recent Plan Review comments. Without taking away from Mr. Tommy McLeod's comments, I will offer the following additional comments:

Your Item No. 1: No Structural Trusses will bear on or penetrate the rated 2 Hour Fire Barrier. The Fire Barrier will be parallel and tight to the bearing wall of the Multi-Purpose Room, but on the Educational side and the Contractor will set the first truss on the Educational side to allow for the Fire Barrier to extend tight to the underside of the Educational Roof. The bearing wall of the Multi Purpose Room will be braced by the trusses for the Multi Purpose Room, and the Fire Barrier wall will be braced by the incoming roof of the Educational Building. The trusses for the Educational Building are running from front to back so that the Fire Barrier will be running parallel to the Educational trusses, thus allowing it to run up tight to the underside of the roof.

Your Item No. 2: The column which receives Girder Truss GRD is just outside of the Fire Barrier, but all columns will be wrapped with 2 hour rated construction in compliance with UL Design No. U-419.

Your Item No. 3: All doors and frames within the Fire Barrier will be 90 minute rated with limiting glass area per Code.

Your Item No. 4: There will now be rated dampers within the penetrations of the Fire Barrier in ductwork. The reason these were not in the original plans is because the rated Fire Barrier was not. Now that the Fire Barrier is in the Scope of Work, the rated dampers will also be in the ductwork.

Your Item No. 5: Drawing M000, Note P states to provide duct smoke detectors. Also Drawing M401, Detail #3 shows the duct mounted Smoke Detectors.

Please do not hesitate to call if I may offer further clarifications. Thank you very much.

Sincerely

Ron Ward Webb, Architect

cc: R. Hinton, G. Surles, G. Blue, T. McLeod, file
code: PR Response #2