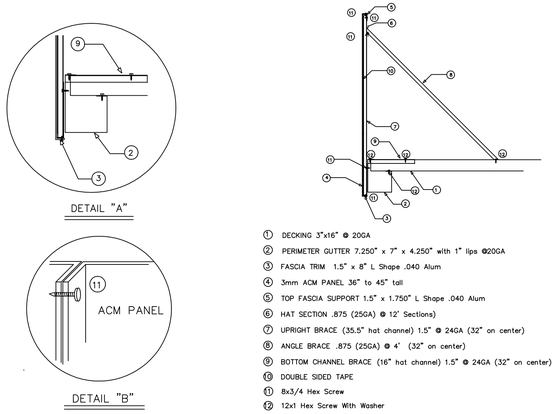

FASCIA DETAIL

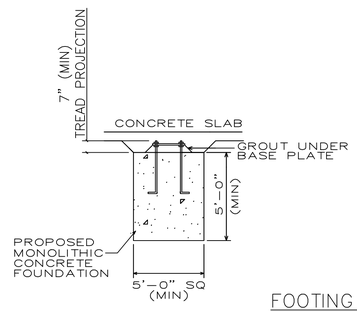

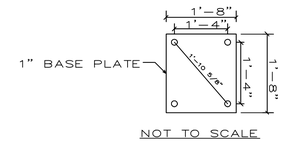

FOOTING DETAIL

FOUNDATION NOTES

1. FOUNDATION DESIGN IS BASED ON PRESUMPTIVE LOAD BEARING VALUES PROVIDED IN THE INTERNATIONAL BUILDING CODE, TABLE 1806.2 AN ASSUMED ALLOWABLE SOIL BEARING PRESSURE OF 2000 PSF AND A LATERAL BEARING PRESSURE OF 100 PSF/FT WAS USED FOR DESIGN.
2. 1 1/4" ø x 34" LG. A-307 GR. A ANCHOR BOLTS W/ HEAVY HEX NUT AND 7" (MIN) THRD. PROJECTION WITH DOUBLE NUTS FOR PLUMBING AND LEVELING TO BE USED. 27" CONCRETE EMBEDMENT (MIN) TO BE PROVIDED.
3. ANCHOR BOLT PATTERN IS TO BE 16" ON CENTER.
4. IF FILL IS USED IT SHALL BE GRANULAR, STRUCTURAL FILL COMPACTED TO TO 100% MODIFIED PROCTOR.

CODE SPECIFICATIONS

I.B.C. INTERNATIONAL BUILDING CODE (2018 EDITION) / 2018 NCBC

ASCE 7-16 MINIMUM DESIGN LOADSFOR BUILDINGS AND OTHER STRUCTURES

ANSI/AISC 341-16 SEISMIC PROVISIONS FOR STRUCTURAL STEEL BUILDINGS

AISC SPECIFICATION FOR THE DESIGN, FABRICATION AND ERECTION OF STRUCTURAL STEEL FOR BUILDINGS (335-89S1)

AISC CODE OF STANDARD PRACTICE FOR STEEL BUILDINGS AND BRIDGES (2016 ED.)

AISI SPECIFICATIONS FOR THE DESIGN OF COLD-FORMED STEEL STRUCTURAL MEMBERS (2016 EDITION)

AWS D1.1/D1.1M:2015 STRUCTURAL WELDING CODE

FRAMING SCHEDULE
COL. - SEE PLAN
BEAM - SEE PLAN
PURLIN - SEE PLAN
DESIGN LOADS: (IBC 2018)
RISK CATEGORY : II
USE GROUP : U
CONSTRUCTION TYPE : II-B
1603.1.1 FLOOR LIVE LOAD: N/A
1603.1.2 ROOF LIVE LOAD: 20 PSF
DEAD & COLLATERAL LOAD: 10 PSF
TOTAL ROOF DESIGN LOAD: 30 PSF
1603.1.3 ROOF SNOW LOAD:
SNOW LOAD COEF.(Ce) = 1.0
IMPORTANCE FACTOR (I) = 1.0
GROUND SNOW LOAD (Pg) = 15 PSF
FLAT ROOF SNOW LOAD (Pf) = 12.6 PSF
THERMAL FACTOR (CT) = 1.2
1603.1.4 WIND LOAD:
ULTIMATE DESIGN WIND SPEED, Vult (3 SEC GUST) : 116 MPH
NOMINAL DESIGN WIND SPEED, Vasd : 90 MPH
WIND EXPOSURE: C
INTERNAL PRESSURE COEFFICIENT (GCpi) : 0.00
COMPONENTS AND CLADDING
DESIGN WIND PRESSURE (Pnet) : 21.0 PSF
EARTHQUAKE LOAD DESIGN DATA
SEISMIC IMPORTANCE FACTOR (Ie) : 1.0
MAPPED SPECTRAL RESPONSE ACCELERATIONS
Ss=0.129 g Sms=0.206 g
S1=0.064 g Sm1=0.154 g
SITE CLASS "D"
SPECTRAL RESPONSE COEFFICIENTS
Sds=0.137 Sd1=0.102
SEISMIC DESIGN CATEGORY : B
BASIC SEISMIC FORCE RESISTING SYSTEM : CANTILEVERED COLUMN
RESPONSE MODIFICATION FACTOR (R) : 1.25
SEISMIC RESPONSE COEFFICIENT (Cs) : .110
EQUIVALENT LATERAL FORCE ANALYSIS PROCEDURE USED
DESIGN BASE SHEAR (V) : 1.15 KIPS / COLUMN (MAX)
(SEISMIC DOES NOT CONTROL)

FOOTING DESIGN:
CONSTRAINED CONDITION
LATERAL BEARING PRESSURE 100 PSF/Ft
MAX. END BEARING PRESSURE 2000 PSF
EXTEND FOOTING BELOW FROST LINE

CONCRETE: (PER ACI 318-19) - 3000 PSI STRENGTH (MIN) @ 28 DAYS

BOLTS:
BOLTS SHALL CONFORM TO ASTM A325 FOR STRUCTURAL STEEL CONNECTIONS. BOLTS SHALL BE TIGHTENED TO THE "SNUG-TIGHT CONDITION" PER AISC AND RCSC SPECIFICATIONS. THE "SNUG-TIGHT CONDITION" IS DEFINED AS THE TIGHTNESS REQUIRED TO BRING THE CONNECTED PLIES INTO FIRM CONTACT. ALL OF THE BOLTS SHALL BE TIGHTENED SUFFICIENTLY TO PREVENT THE REMOVAL OF THE NUTS WITHOUT THE USE OF A WRENCH.

STEEL
1. ERECTION OF STEEL STRUCTURE SHALL BE PERFORMED PER ALL AMERICAN INSTITUTE OF STEEL CONSTRUCTION (AISC) ERECTION PROVISIONS.
2. STRUCTURAL STEEL SHALL CONFORM TO:
Wide Flange Beams - ASTM A992, Grade 50, Fy = 50 KSI
Structural Angles and Channel - ASTM A36, Fy = 36 KSI
Structural Plate - ASTM A36, Fy = 36 KSI
Structural Tubing - ASTM A500, Grade B,
Fy = 42 KSI (ROUND) Fy = 46 KSI (SQ / RECT)
Structural Pipe - ASTM A53, Grade B, Fy = 35 KSI
REBAR - ASTM A615, GRADE 60, Fy = 60 KSI
3. ALL STEEL FRAMING MEMBERS ARE TO BE PAINTED WITH A RED OXIDE PRIMER

WELDS
ALL WELDED CONNECTIONS SHALL BE IN ACCORDANCE WITH LATEST AWS SPECIFICATIONS, USING E70XX ELECTRODES. ALL WELDING SHALL BE PERFORMED BY AN AWS CERTIFIED WELDER.

ROOF PANELS
20 GA. ROLLED FORM STEEL DECKING INSTALLED W/ MAX CLIPS PER MFR. INSTRUCTIONS. U.N.O.

FOUNDATIONS
SEE FOOTING PLANS FOR DETAILS.

GROUT
Factory Package - ASTM 109
Non-Corrosive and Non-Staining
To be mixed with water for consistency suitable for application and 30 minute working time.

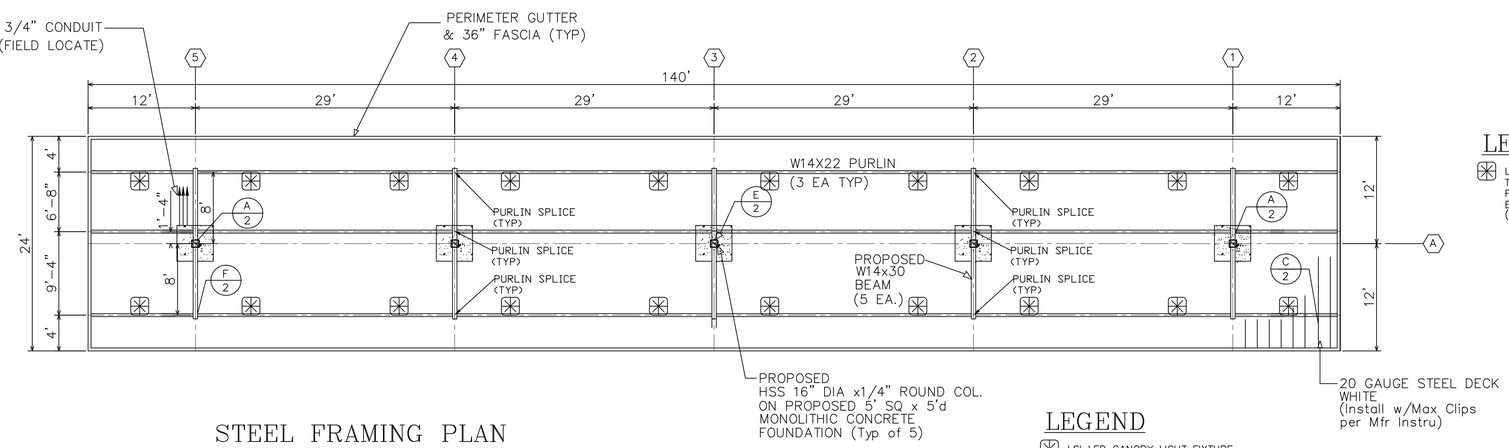

STEEL FRAMING PLAN

LEGEND

LSI LED CANOPY LIGHT FIXTURE
TYP OF 20
FIXTURE BY OTHERS
EXACT LOCATION TO BE FEILD DETERMINED
(WIRING BY OTHERS)

LEGEND

LSI LED CANOPY LIGHT FIXTURE
TYP OF 20
FIXTURE BY OTHERS
EXACT LOCATION TO BE FEILD DETERMINED
(WIRING BY OTHERS)

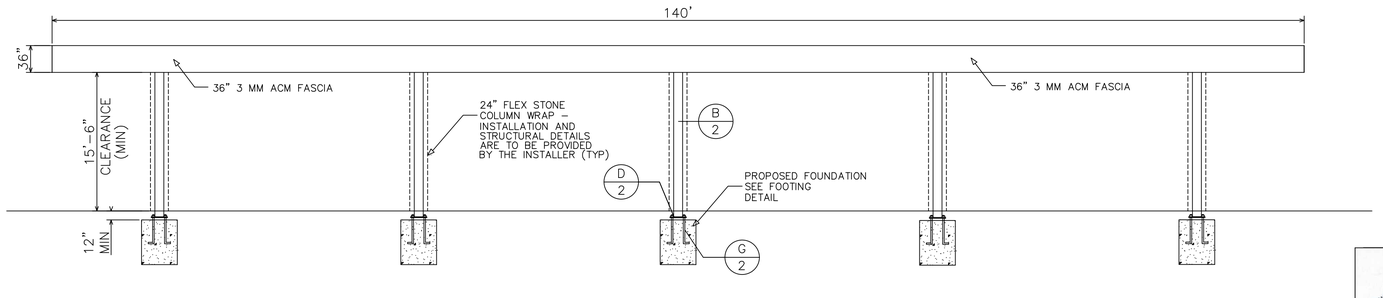

ELEVATION

ALL WORK TO BE IN ACCORDANCE WITH THE 2018 NCBC

STRUCTURAL ENGINEER:
JEFF KEITH, PE - NC PE # 37194
PO BOX 72692
RICHMOND, VA 23235
PH: (804) 909-3633
E-MAIL: ADVENGRLLC@GMAIL.COM

NORTH CAROLINA PROFESSIONAL SEAL 037194 ENGINEER JEFF KEITH
10-7-22

NO.	DATE	BY	REVISION

SHEET TITLE: 24'x 140' 5 COLUMN CANOPY
PROJECT NO.
SCALE: AS SHOWN
DATE: 10-07-22
PROJECT: CHAMPS C-STORE
CHALYBEATE SPRINGS RD & US 401 INT
FUQUAY VARINA, NC 27526
DRAWN BY: JK
CHECKED BY: JK

PHILLIPS ALUMINUM CO.
3032 POLKVILLE ROAD
SHELBY, NORTH CAROLINA 28150
(704) 487-7969 FAX (704) 487-1832
CALVIN@PHILLIPSALUMINUM.COM

DRAWING NO. 997

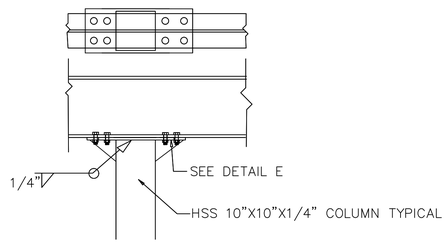

COLUMN–BEAM CONNECTION (A)
NTS

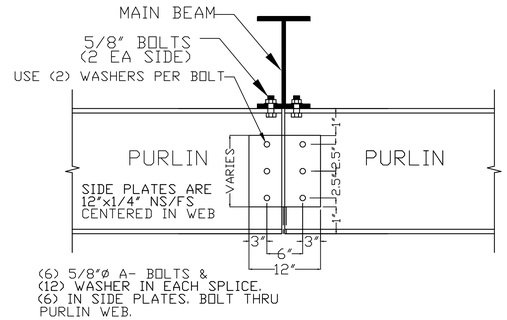

PURLIN WEB SPLICE DETAIL (H)

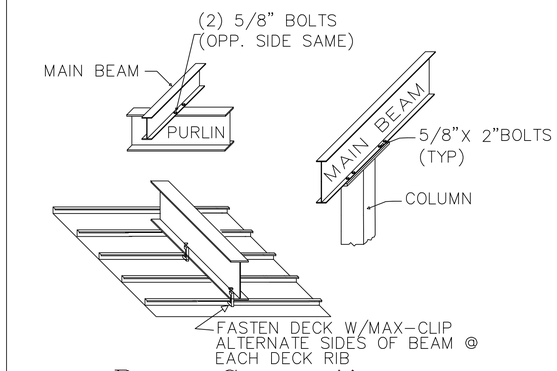

Beam Connections

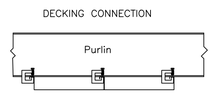

DECKING– 3" X 16" 20 GA. STEEL
FASTENED BY MAX CLIPS SUPPLIED
BY DECKING MANUFACTURER AT EACH
PURLIN (@16" O.C. MAX)
DECKING WEIGHT= 2.25#/ SQFT

DECKING CONNECTION DETAIL (C)
NTS

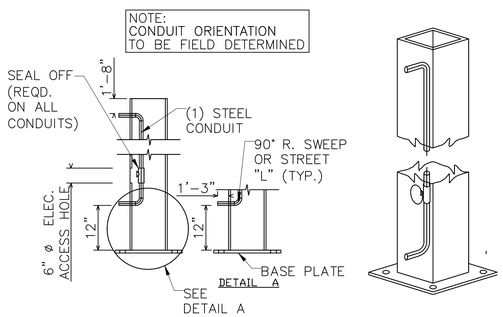

INTERNAL CONDUIT DETAIL
(1) CONDUIT

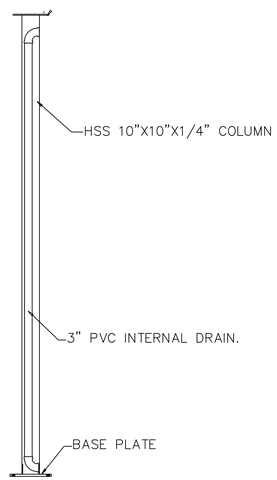

COLUMN DETAIL (B)
NTS

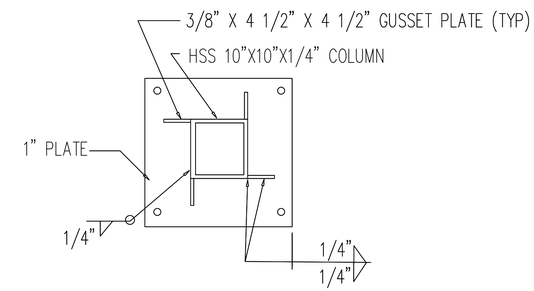

BASE PLATE DETAIL (D)
NTS

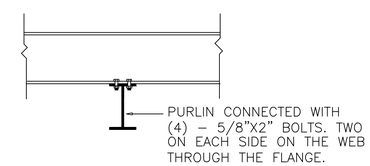

SECTION (F)
NTS

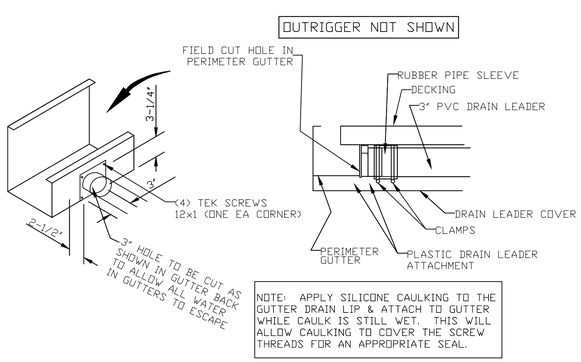

NOTE: APPLY SILICONE CAULKING TO THE GUTTER DRAIN LIP & ATTACH TO GUTTER WHILE CAULK IS STILL WET. THIS WILL ALLOW CAULKING TO COVER THE SCREW THREADS FOR AN APPROPRIATE SEAL.

GUTTER CONNECTION DETAILS

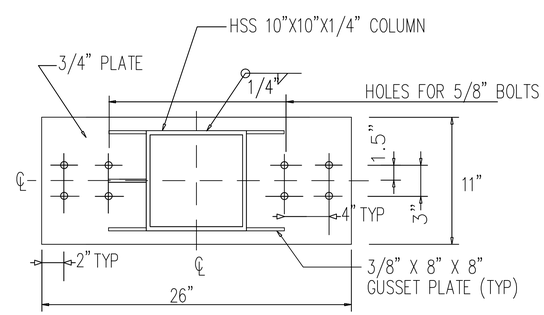

CAP PLATE DETAIL (E)
NTS

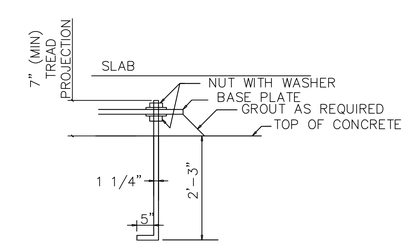

ANCHOR BOLT DETAIL (G)
NTS

ALL WORK TO BE IN ACCORDANCE WITH THE 2018 NCBC

TYPICAL DETAILS

NORTH CAROLINA PROFESSIONAL SEAL 037194 ENGINEER JESSE KNIGHT 10-7-22

NO.	DATE	BY	REVISION

SHEET TITLE: 24'x 140' 5 COLUMN CANOPY
PROJECT: CHAMPS C–STORE
CHALYBEATE SPRINGS RD & US 401 INT
FUQUAY VARINA, NC 27526

PHILLIPS ALUMINUM CO.
3032 POLKVILLE ROAD
SHELBY, NORTH CAROLINA 28150
(704) 487–7969 FAX (704) 487–1832
CALVIN@PHILLIPSALUMINUM.COM

PROJECT NO.
SCALE: AS SHOWN
DATE: 10–07–22
DRAWN BY: JK
CHECKED BY: JK
DRAWING NO. 997
2 of 3

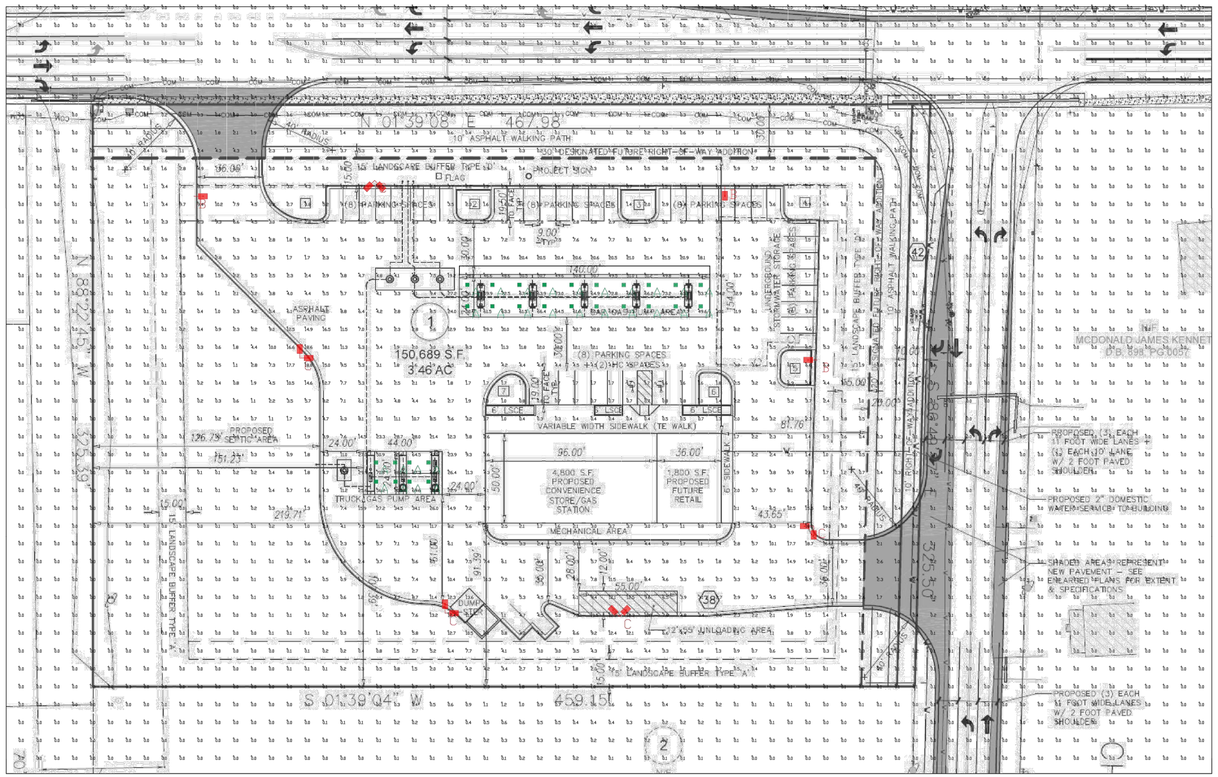

Luminaire Schedule									
Symbol	Qty	Label	Arrangement	Description	LLD	LDD	LLF	Arr. Lum. Lumens	Arr. Watts
	28	A	SINGLE	SCV-LED-20L-SC-50 MTD @ 16' GAS, 18' DIESEL	1.000	1.000	1.000	20234	133
	5	C	2 @ 90 DEGREES	SLM-LED-24L-SIL-FT-50-70CRI-D90-20' POLE+2' BASE	1.000	1.000	1.000	50994	352
	3	B	SINGLE	SLM-LED-24L-SIL-FT-50-70CRI-SINGLE-20' POLE+2' BASE	1.000	1.000	1.000	25497	176

Calculation Summary							
Label	CalcType	Units	Avg	Max	Min	Avg/Min	Max/Min
ALL CALCS @ GRADE	Illuminance	Fc	3.07	88.3	0.0	N.A.	N.A.
DIESEL CANOPY	Illuminance	Fc	65.92	88.3	47.5	1.39	1.86
GAS CANOPY	Illuminance	Fc	63.23	73.2	49.6	1.27	1.48
INSIDE CURB	Illuminance	Fc	7.75	34.5	0.7	11.07	49.29

PHOTOMETRIC EVALUATION
NOT FOR CONSTRUCTION

Based on the information provided, all dimensions and luminaire locations shown represent recommended positions. The engineer and/or architect must determine the applicability of the layout to existing or future field conditions.

This lighting plan represents illumination levels calculated from laboratory data taken under controlled conditions in accordance with The Illuminating Engineering Society (IES) approved methods. Actual performance of any manufacturer's luminaires may vary due to changes in electrical voltage, tolerance in lamps/LEDs and other variable field conditions. Calculations do not include obstructions such as buildings, curbs, landscaping, or any other architectural elements unless noted. Fixture nomenclature noted does not include mounting hardware or poles. This drawing is for photometric evaluation purposes only and should not be used as a construction document or as a final document for ordering product.

Drawing scaled or converted from PDF file or scanned / submitted image. Dimensions are approximate.

Total Project Watts_1
Total Watts = 6012

2000 ALLIANCE RD. CINCINNATI, OHIO 45240 USA
TEL: 513.825.8100 • FAX: 513.825.1243

LIGHTING PROPOSAL LD-155722-2

CHAMPS C-STORE
US 401
FUQUAY-VARINA, NC

BY:RWVE	DATE:4/13/22	REV:10-05-22	SHEET 1 OF 1

SCALE: 1'=30' 0 30

PHOTOMETRICS PLAN

1" = 40'

ALL WORK TO BE IN ACCORDANCE WITH THE 2018 NCBC

NORTH CAROLINA PROFESSIONAL SEAL 037194 ENGINEER JEFF KOONTZ 10-7-22

NO.	DATE	BY	REVISION

SHEET TITLE
24'x 140'
5 COLUMN CANOPY

PROJECT
CHAMPS C-STORE
CHALYBEATE SPRINGS RD & US 401 INT
FUQUAY VARINA, NC 27526

PHILLIPS ALUMINUM CO.
3032 POLKVILLE ROAD
SHELBY, NORTH CAROLINA 28150
(704) 487-7969 FAX (704) 487-1832
CALVIN@PHILLIPSALUMINUM.COM

PROJECT NO. A
SCALE AS SHOWN
DATE 10-07-22
DRAWN BY JK
CHECKED BY JK
DRAWING NO. 997
3 of 3