TABLE 1
BOW/RAFTER FRAME, END POST, GROUND ANCHOR AND PANEL FASTENER SPACING SPECIFICATIONS

WIND EXPOSURE CATEGORY	ULTIMATE WIND SPEED (MPH)	NOMINAL WIND SPEED (MPH)	MAXIMUM GROUND SNOW LOAD (PSF)	MAXIMUM POST/RAFTER SPACING (FEET)	AVERAGE FASTENER SPACING ON-CENTERS ALONG RAFTERS OR PURLINS, AND POSTS OR GIRTS (INCHES)	
					METAL PANELS	SPACING
B or C	105 TO 150	82 TO 117	35	5.0	29 Gauge	8
			40	4.0		
			50	4.0 (12 Ga.)		

NOTES:
1. Specifications applicable to 29 gauge metal panels fastened directly to 12 or 14 gauge steel tube bow frames.
2. Fasteners consist of #12 x ¾" self-drilling screws without control seal washers.
3. Specifications applicable only for mean roof height of 24 feet or less and roof slopes of 7 to 27 degrees (1.5:12 to 6:12 pitch). Spacing requirements for other roof heights and/or slopes may vary.

STANDARD CARPORT DETAILS

12 ft to 24 ft SPAN

LIGHT FRAME CONSTRUCTION

NOTE: THESE PLANS MAY BE USED FOR SPANS LESS THAN 12 FEET.

NOTE: USE ◉ 2½" x 2½" 14 Ga.
○ 2¼" x 2¼" 12 Ga.
STEEL TUBE FOR ALL FRAME AND BASE RAIL MEMBERS UNLESS OTHERWISE SHOWN.

NOTE: THESE PLANS INCLUDE STANDARD DETAILS THAT CAN BE USED FOR A WIDE RANGE OF APPLICATIONS. IF SITE SPECIFIC PLANS ARE REQUIRED, A SEPARATE SET OF PLANS WILL NEED TO BE PREPARED.

CAROLINA CARPORTS INC.
P.O. BOX 1263
DOBSON, NC 27017
TOLL FREE 1-800-670-4262
LOCAL 336-367-6400
FAX 336-367-6410

This document is the property of Carolina Carports, Inc. Use of these plans without the permission of Carolina Carports is prohibited.

METAL CARPORT INSTALLATION PLANS AND DETAILS

AND

FRAMING AND FASTENER SPECIFICATIONS

CAROLINA CARPORTS, INC.
187 Cardinal Ridge Trail
DOBSON, NORTH CAROLINA 27017

THE OWNER IS RESPONSIBLE FOR OBTAINING A BUILDING PERMIT, IF NEEDED, AND FOR COMPLYING WITH ALL LOCAL BUILDING CODE REQUIREMENTS.

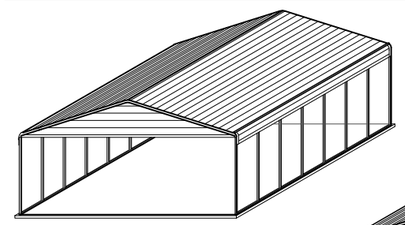

ISOMETRIC

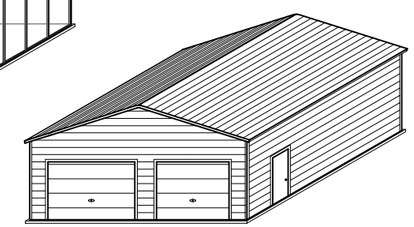

ISOMETRIC

THIS IS TO CERTIFY THAT THE CALCULATIONS AND SPECIFICATIONS HEREIN HAVE BEEN PREPARED BY THE UNDERSIGNED PROFESSIONAL ENGINEER, AND ARE IN ACCORDANCE WITH THE REQUIREMENTS OF THE 2018 INTERNATIONAL BUILDING CODE AND THE 2018 NORTH CAROLINA BUILDING CODE.

BUILDING CODE INFORMATION		
OCCUPANCY CATEGORY	I	II
USE GROUP	U or S	
CONSTRUCTION TYPE	2B	
IMPORTANCE FACTORS		
WIND Iw	1.0	
SNOW Is	0.8	1.0
EARTHQUAKE Ie	1.0	

DESIGN LOADS	
MIN. DEAD LOAD	5 PSF
MIN. FLOOR LIVE LOAD	125 PSF
MIN. ROOF LIVE LOAD	20 PSF
MIN. GROUND SNOW LOAD	SEE TABLE 1
MAX. GROUND SNOW LOAD	
MIN. ULTIMATE WIND SPEED	
MAX. ULTIMATE WIND SPEED	
EXPOSURE CATEGORY	
MAX. SEISMIC DESIGN CATEGORY	D2

GENERAL NOTES:

THESE PLANS PERTAIN ONLY TO THE STRUCTURE, INCLUDING MAIN WIND FORCE RESISTING SYSTEM (MWFRS), COMPONENTS AND CLADDING, AND BASE RAIL ANCHORAGE. OTHER DESIGN ISSUES, INCLUDING, BUT NOT LIMITED TO, PLUMBING, ELECTRICAL, INGRESS/EGRESS, PROPERTY SET-BACKS, OR OTHER LOCAL ZONING REQUIREMENTS ARE THE RESPONSIBILITY OF OTHERS.

THESE STRUCTURES ARE DESIGNED AS UTILITY/STORAGE BUILDINGS CAPABLE OF SUPPORTING THE DEAD LOAD OF THE STRUCTURE AND APPLICABLE LIVE AND WIND LOADS. IMPROVEMENTS NOT SPECIFICALLY ADDRESSED HEREIN, WHICH EXERT ADDITIONAL LOADS ON THE STRUCTURE SHALL BE AT THE OWNER'S RISK. CAROLINA CARPORTS SHALL NOT BE RESPONSIBLE FOR STRUCTURAL DAMAGE OR FAILURE DUE TO THE APPLICATION OF ADDITIONAL LOADS.

THE SPACING INDICATED IN THE ABOVE TABLE IS THE MAXIMUM SPACING FOR THE MAIN WIND FORCE RESISTING SYSTEM. A CLOSER SPACING MAY BE NEEDED TO MEET LOCAL BUILDING CODE AND/OR SITE SPECIFIC REQUIREMENTS.

ALL STEEL TUBING SHALL BE 55 KSI STEEL OR BETTER. ALL METAL PANELS SHALL BE 80 KSI STEEL OR BETTER.

FASTEN METAL ROOF AND WALL PANELS TO FRAMING WITH #12" x ¾" SELF DRILLING FASTENERS WITH CONTROL SEAL WASHERS AT AN AVERAGE SPACING OF 8" FOR 29 GAUGE PANELS AND 6" FOR 26 GAUGE PANELS.

ALL FIELD CONNECTIONS SHALL BE #12 x ¾" SELF DRILLING FASTENERS (SDF) UNLESS NOTED OTHERWISE.

ALL WELDED CONNECTIONS SHALL BE SHOP WELDED UNLESS NOTED OTHERWISE.

GROUND ANCHOR REQUIREMENTS: INSTALL HELICAL ANCHORS ALONG SIDE BASE RAIL WITHIN 6" OF EACH CORNER POST AND AT A MAXIMUM SPACING OF 25' ALONG THE BASE RAIL. INSTALL GROUND ANCHORS (#4 THREADED REBAR) BETWEEN THE HELICAL ANCHORS WITHIN 6" OF EACH POST ALONG THE BASE RAIL. HELICAL ANCHORS AND GROUND ANCHORS ARE NOT REQUIRED FOR CONCRETE FOOTING AND/OR CONCRETE SLAB CONSTRUCTION.

INSTALL CONCRETE ANCHORS WITHIN 6" OF EACH VERTICAL POST ALONG SIDE AND END BASE RAILS. USE ITW RAMSET/REDHEAD TRUBOLT OR SIMPSON STRONG-TIE STRONG BOLT-2 WEDGE ANCHORS, OR ITW REDHEAD TAPCON+ OR TITEN HD SCREW ANCHORS OR AN APPROVED EQUAL.

POST/RAFTER BRACING: BRACE ON EVERY POST/RAFTER CONNECTION, EXCEPT FOR END WALLS AND HEADERS.

GALVANIZATION: METAL ACCESSORIES FOR USE IN EXTERIOR WALL CONSTRUCTION AND NOT DIRECTLY EXPOSED TO THE WEATHER SHALL BE GALVANIZED IN ACCORDANCE WITH ASTM A 153, CLASS B-2. METAL PLATE CONNECTORS, SCREWS, BOLTS AND NAILS EXPOSED DIRECTLY TO THE WEATHER SHALL BE STAINLESS STEEL OR HOT DIPPED GALVANIZED.

CONCRETE FOUNDATION DESIGN RECOMMENDATIONS:

THE OWNER IS RESPONSIBLE FOR PROVIDING A SUITABLE SLAB AND FOUNDATION FOR THE PROPOSED STRUCTURE. THE CONCRETE DETAILS SHOWN ON THESE PLANS MAY BE USED, HOWEVER, THE LOCAL BUILDING CODE OFFICIALS MAY HAVE MORE RESTRICTIVE REQUIREMENTS. THE OWNER IS RESPONSIBLE FOR COORDINATING THE CONCRETE SLAB AND FOUNDATION STRENGTH AND DEPTH REQUIREMENTS WITH THE LOCAL BUILDING CODE OFFICIALS.

CONCRETE SHALL HAVE A MINIMUM SPECIFIED COMPRESSIVE STRENGTH OF 3000 PSI AT 28 DAYS OR AS REQUIRED BY LOCAL BUILDING CODE. THE USE OF HIGHER STRENGTH CONCRETE IS ACCEPTABLE.

COVER OVER REINFORCING STEEL:
MINIMUM CONCRETE OVER REINFORCING BARS SHALL BE 3 INCHES WHERE CONCRETE IS CAST AGAINST AND PERMANENTLY IN CONTACT WITH THE EARTH OR EXPOSED TO THE EARTH OR WEATHER AND 1½" ELSEWHERE.

REINFORCING STEEL:
THE REINFORCING STEEL SHALL BE MINIMUM GRADE 40. THE USE OF FIBER REINFORCED CONCRETE (FRC) OR WELDED WIRE FABRIC (WWF) IS ACCEPTABLE.

These plans have been provided for the purpose of obtaining a building permit for the construction of the building for:

Name: Scott Drye
Address: 307 Anderson Lake Drive
City: Spring Lake State: NC
Zip: 28390

Use of these plans by anyone else or for any other purpose is prohibited.

NORTH CAROLINA PROFESSIONAL SEAL 030196 ENGINEER ROBERT L. LUEBBERS

03/25/2024

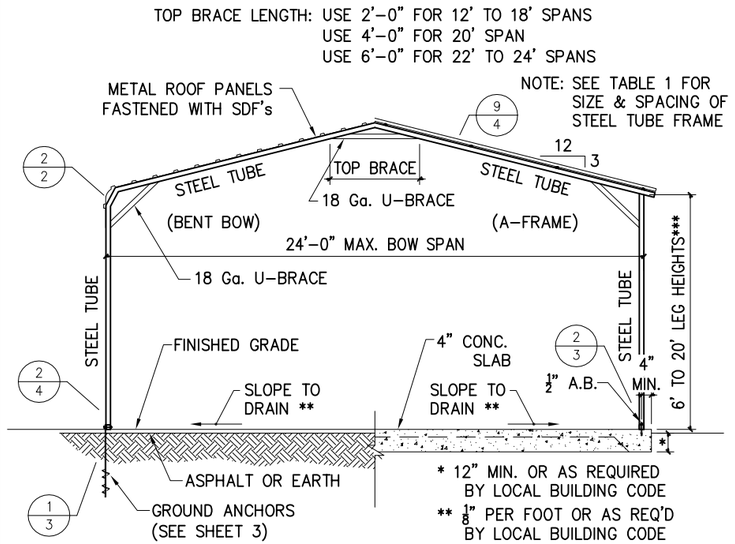

1/2 TYPICAL BOW SECTION

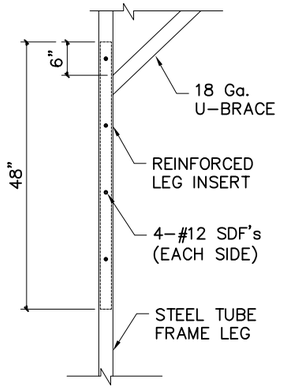

***REINFORCED LEG INSERT

(LEG HEIGHTS 13' to 14')

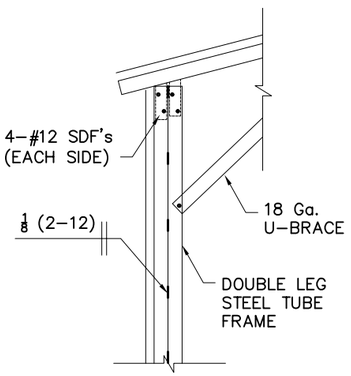

***DOUBLE LEG

(LEG HEIGHTS 15' to 16')

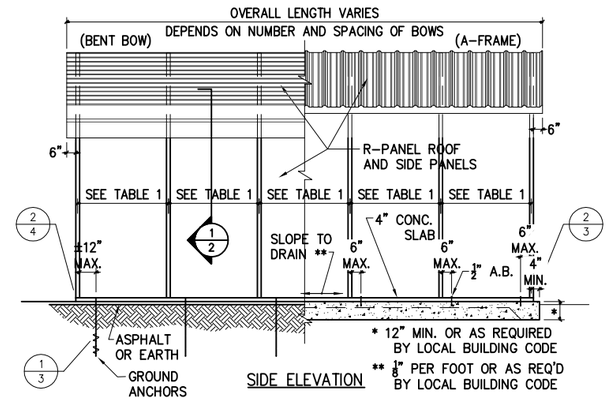

SIDE ELEVATION

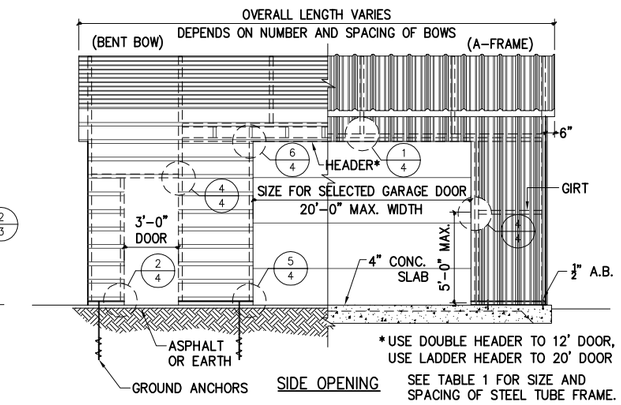

SIDE OPENING

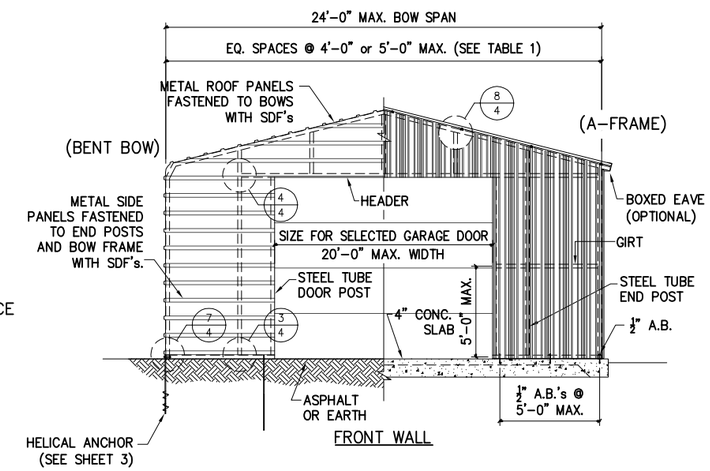

FRONT WALL

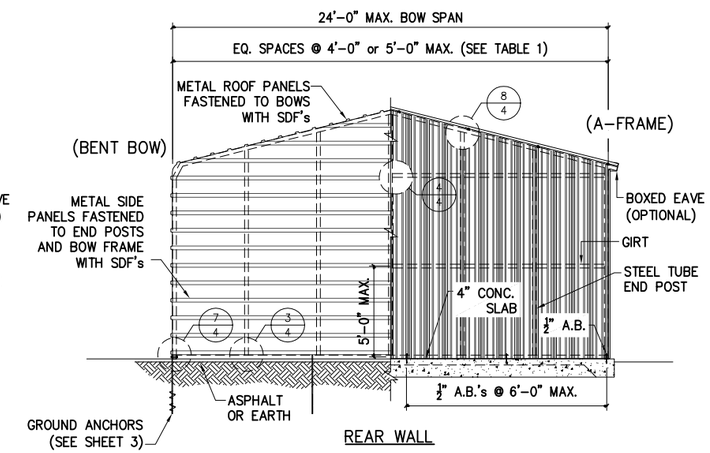

REAR WALL

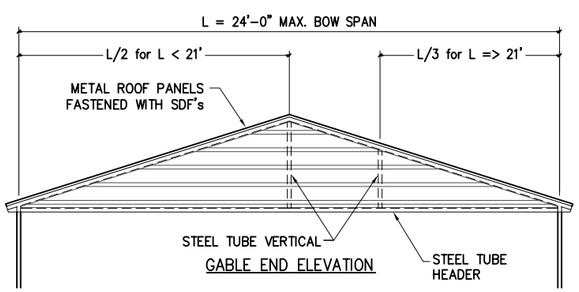

GABLE END ELEVATION

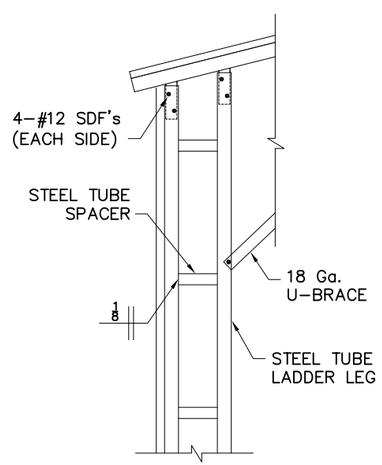

***LADDER LEG

(LEG HEIGHTS 17' to 20')

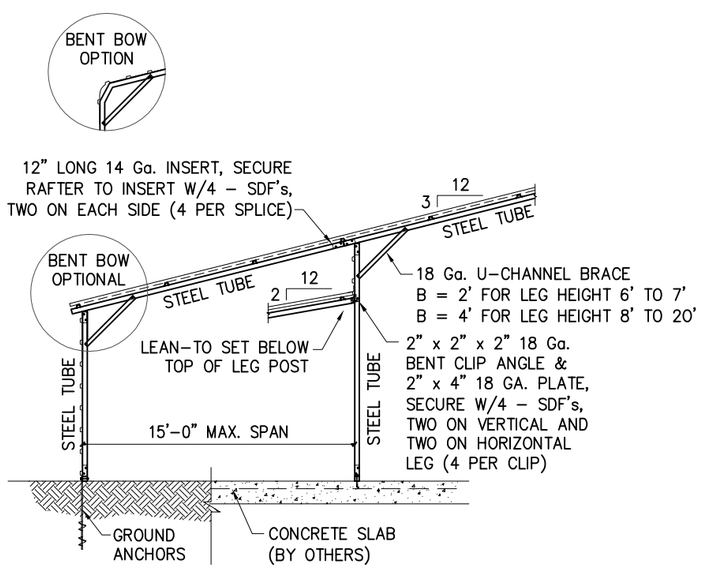

TYPICAL SIDE EXTENSION SECTION

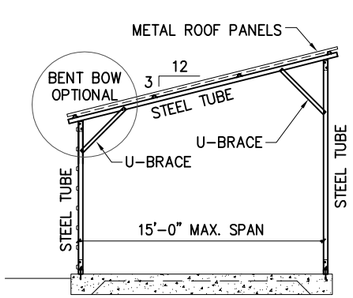

STAND-ALONE LEAN-TO

03/25/2024

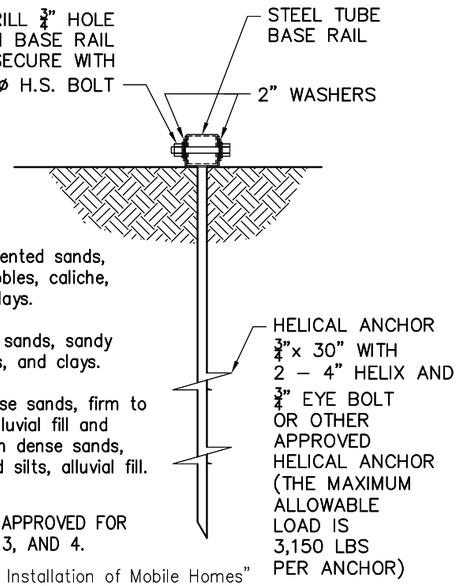

SOIL CLASSIFICATIONS

SOIL CLASS	SOIL DESCRIPTION
2	Very dense &/or cemented sands, coarse gravel and cobbles, caliche, preloaded silts, and clays.
3	Medium dense coarse sands, sandy gravels, very stiff silts, and clays.
4	Loose to medium dense sands, firm to stiff clays and silts alluvial fill and VERY loose to medium dense sands, firm to stiff clays and silts, alluvial fill.

THE HELICAL ANCHOR SHALL BE APPROVED FOR USE IN SOIL CLASSIFICATIONS 2, 3, AND 4.

* Taken from HUD "Standard for Installation of Mobile Homes"

1 SOIL BASE RAIL ANCHOR DETAIL

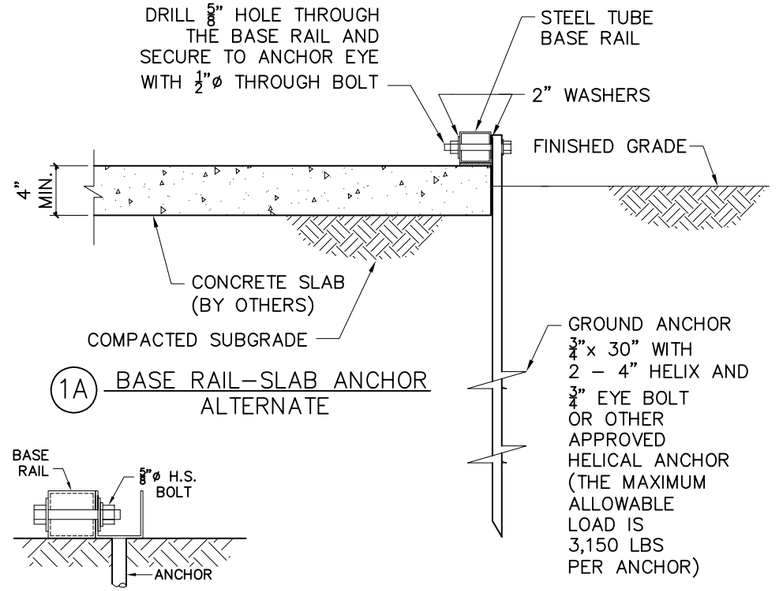

1A BASE RAIL–SLAB ANCHOR ALTERNATE

ALTERNATE DETAIL

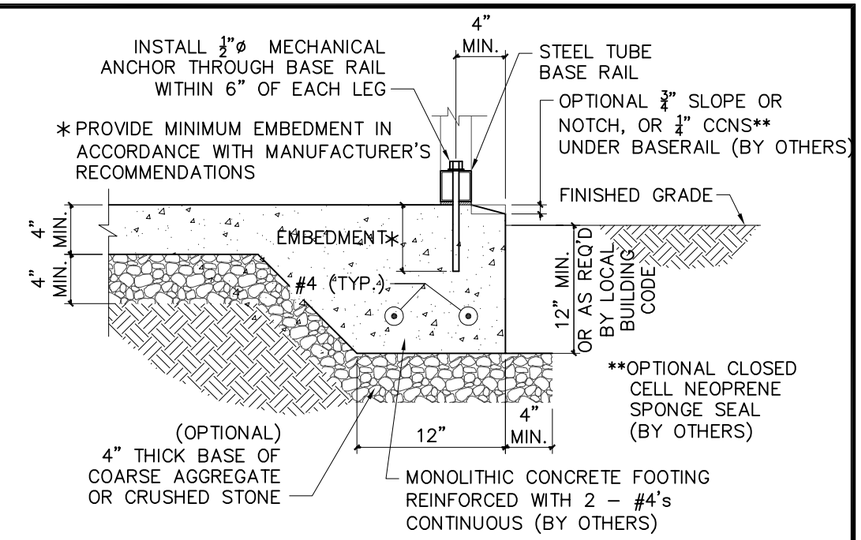

2 CONCRETE BASE RAIL ANCHORAGE (SINGLE LEG)

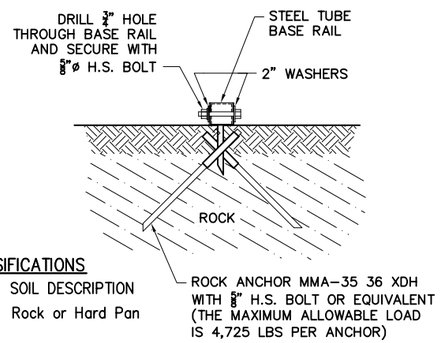

SOIL CLASSIFICATIONS

SOIL CLASS	SOIL DESCRIPTION
1	Rock or Hard Pan

1C ROCK BASE RAIL ANCHOR DETAIL

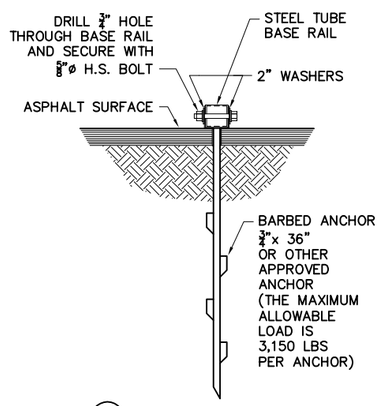

1B ASPHALT ANCHOR DETAIL

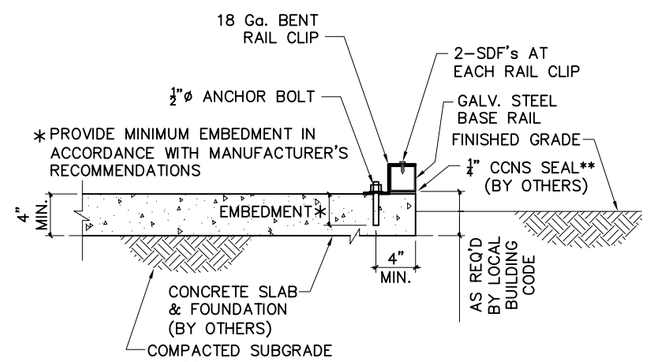

2C ALTERNATE BASE RAIL ANCHORAGE

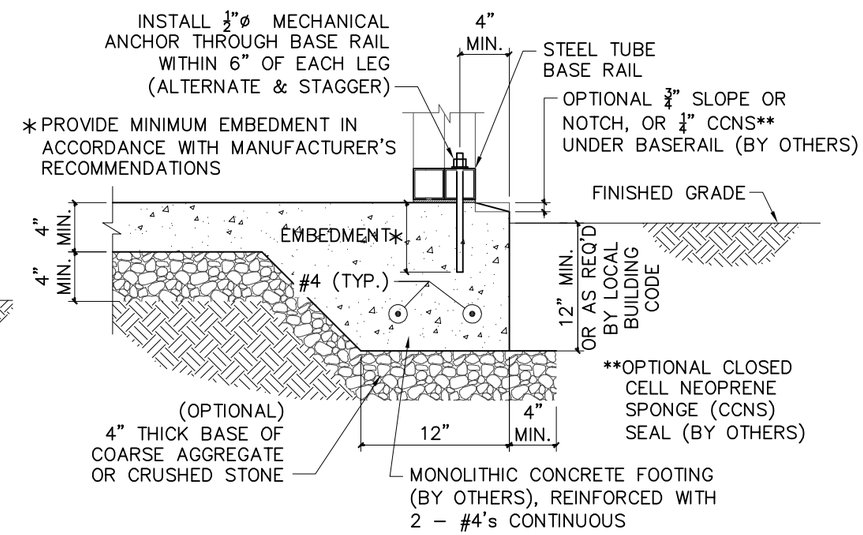

2B CONCRETE BASE RAIL ANCHORAGE (DOUBLE LEG)

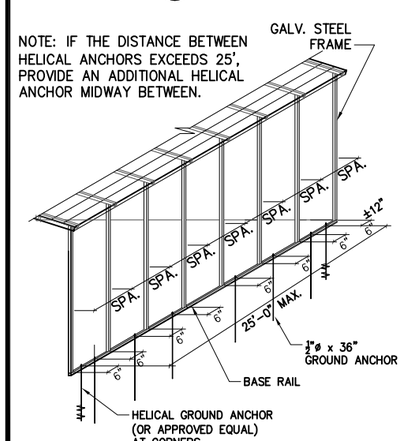

HELICAL GROUND ANCHORS

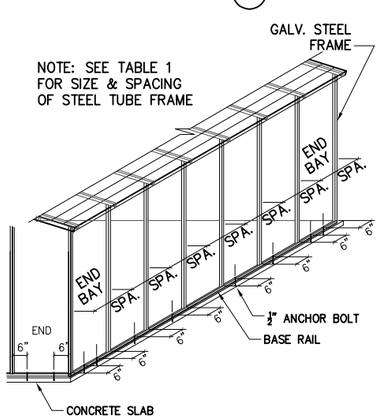

ANCHOR BOLTS

BREAKAWAY

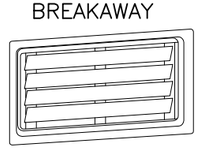

CRAWL SPACE DOOR SYSTEMS, INC.
5741 Bayside Road, #105
Virginia Beach, VA 23455
Engineered Flood Vent
Model CSBA816

OR Approved Equal

FLOOD VENTS

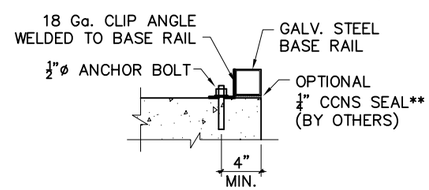

2D ALTERNATE BASE RAIL CLIP

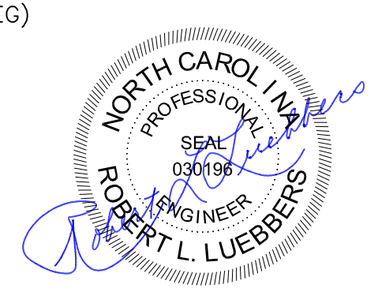

03/25/2024

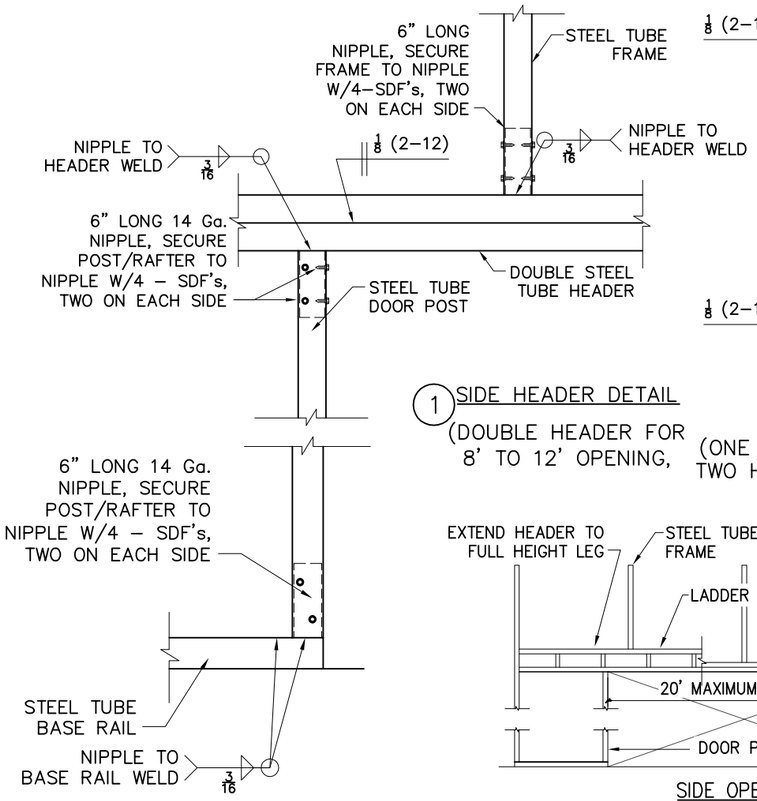

1 SIDE HEADER DETAIL

(DOUBLE HEADER FOR 8' TO 12' OPENING,

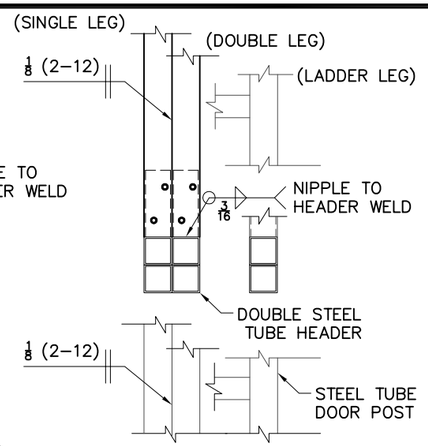

HEADER SECTION

(ONE HEADER FOR SINGLE LEG, TWO HEADERS FOR DOUBLE LEG AND LADDER LEG)

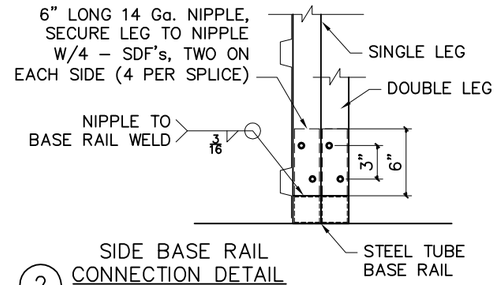

2 SIDE BASE RAIL CONNECTION DETAIL

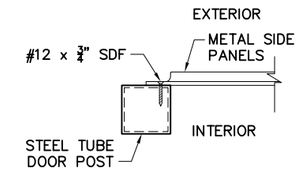

SECTION THROUGH DOOR POST

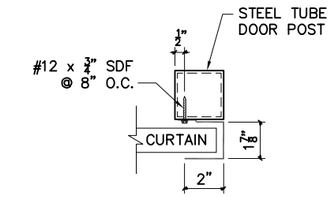

SECTION THROUGH ROLL–UP DOOR POST

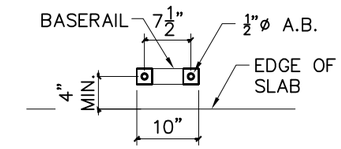

PLAN

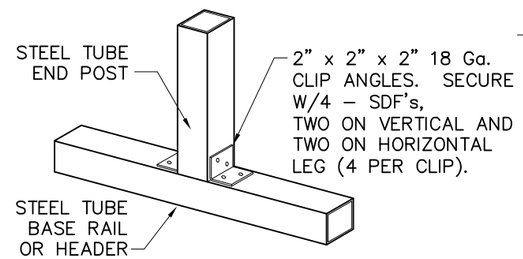

3 END POST/BASE RAIL CONNECTION DETAIL

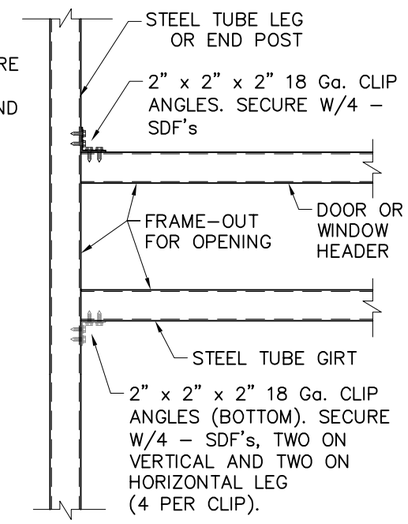

4 ENDWALL TO HEADER AND GIRT TO POST CONNECTION

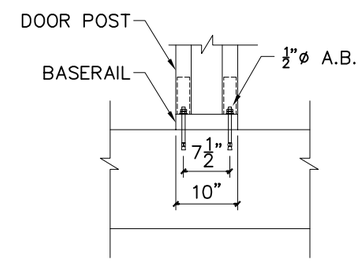

MINIMUM DISTANCE BETWEEN DOORWAYS

(12" MINIMUM IS PREFERRED, 10" MINIMUM IS ACCEPTABLE.)

5 POST/BASE RAIL DETAIL

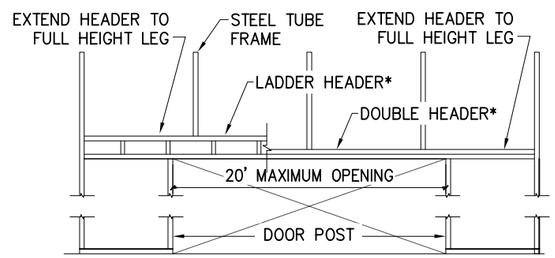

SIDE OPENING

* USE DOUBLE HEADER TO 12' DOOR, USE LADDER HEADER TO 20' DOOR

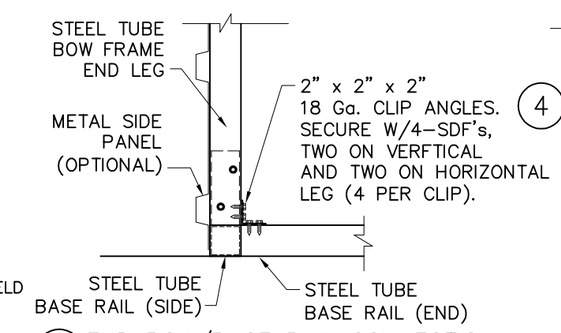

7 END BOW/BASE RAIL CONNECTION

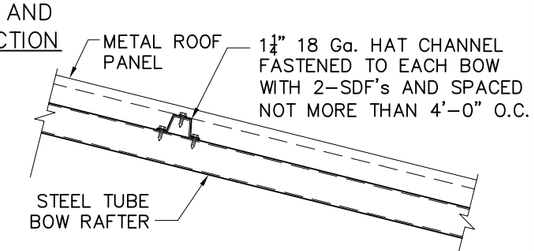

9 VERTICAL PANEL ATTACHMENT

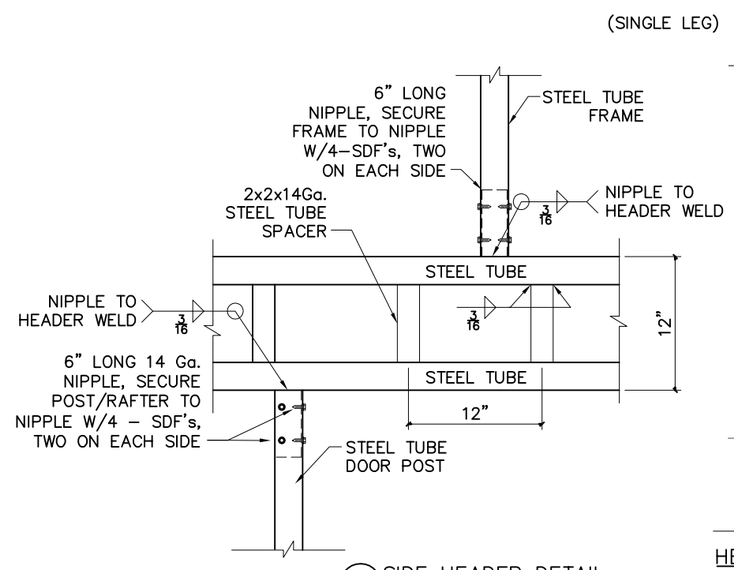

6 SIDE HEADER DETAIL

(LADDER STYLE FOR 13' TO 20' OPENING)

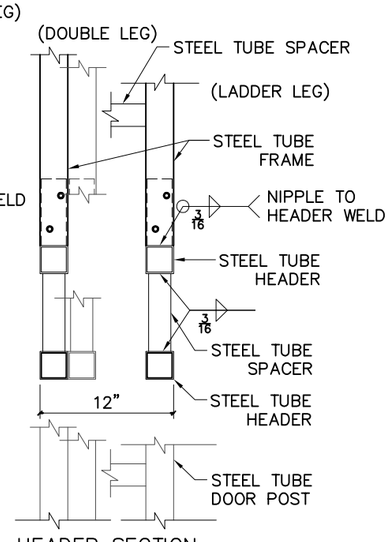

HEADER SECTION

(ONE HEADER FOR SINGLE LEG, TWO HEADERS FOR DOUBLE LEG AND LADDER LEG)

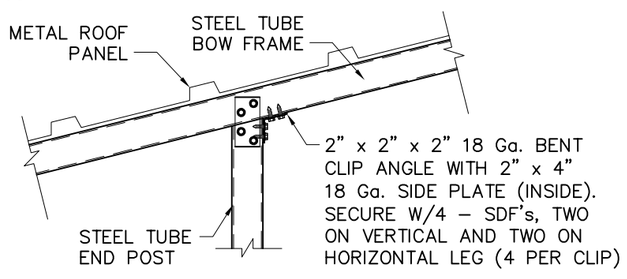

8 END POST TO BOW FRAME CONNECTION

NORTH CAROLINA PROFESSIONAL SEAL 030196 ENGINEER ROBERT L. LUEBBERS

03/25/2024