Reviewed for Fire Code Compliance
Harnett COUNTY NORTH CAROLINA Roger Sullivan
11/25/2025 9:41:21 AM

Harnett COUNTY NORTH CAROLINA

Emergency Services Department
www.harnett.org

Fire Marshal Division
P.O. Box 370
Lillington, NC 27546
910-893-7580

Application for Plan Review

Permit Type: Automatic Fire Extinguishing System - Fixed Fire Suppression Systems/Sprinkler

Date Received: _____ Received By: _____

Name of Project: Flatwoods Middle School

Physical Address of Project: 3544 US 401 South, Lillington NC

Plans Submitted By: Larry Taylor

Project Phone: (910)-818-1349

Contact Person/Address: Larry Taylor
2863 Lee Ave., Sanford, NC 27332

Contact Phone: (910)-818-1349 (_____)-_____-_____

Contractor's Name/Info: Phoenix Fire Protection

Contractor's Phone: (910)-818-1349

Contact Email: larry.taylor@phoenixfp.us

- **Plans that are submitted will be reviewed as quickly as possible with an average time of review between 7-10 working days.**
- **Status checks may be conducted on plan reviews by visiting the website http://hteweb.harnett.org/Click2GovBP/Index.jsp or by calling the Harnett County Central Permitting Office (910-893-7525 : Opt. 2), or the Harnett County Fire Marshal's Office (910-893-7580).**
- **Approved plans must be picked up from the Central Permitting Office and all fees paid before any required inspections can be conducted.**

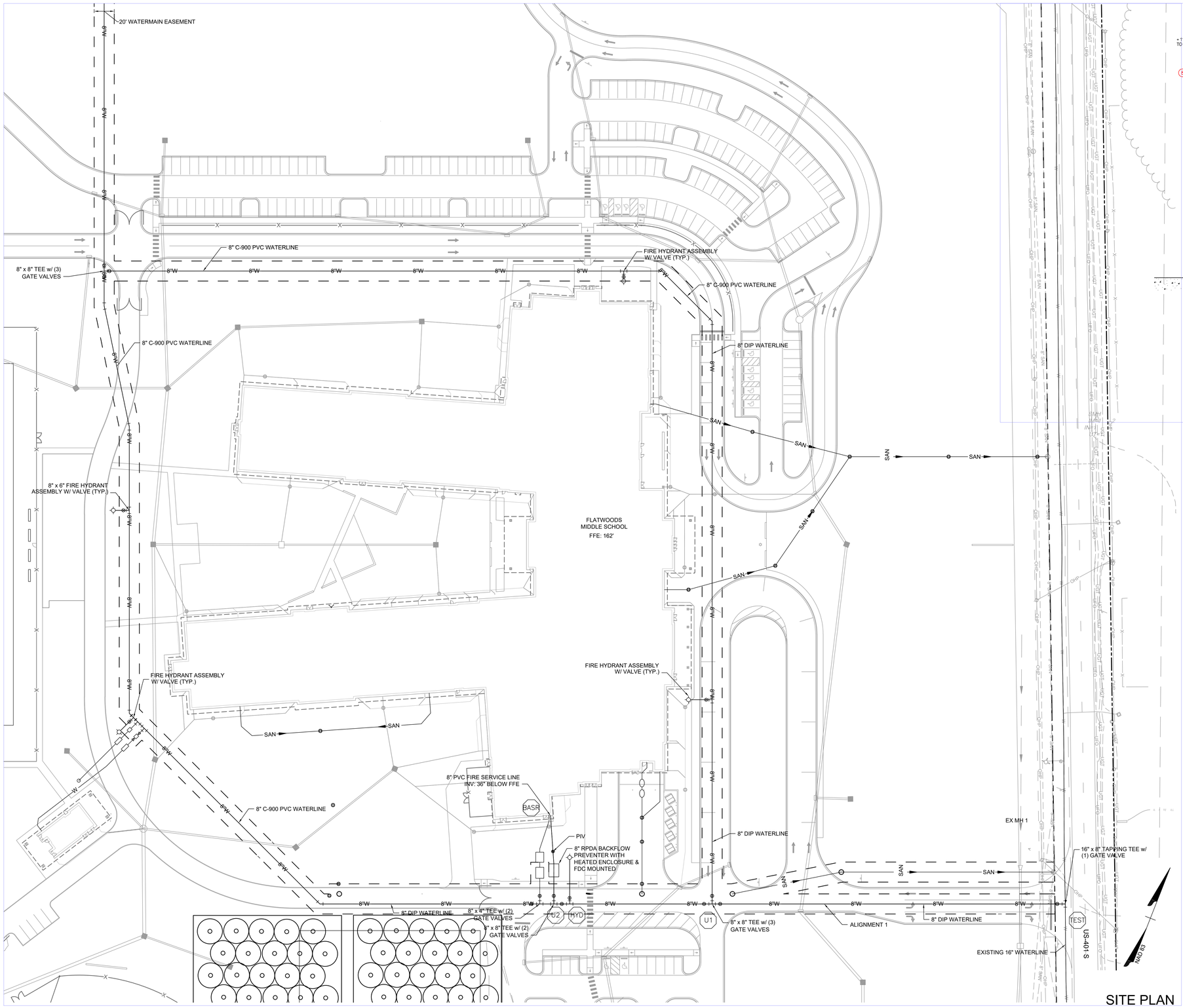

SITE PLAN

SCALE: 1" = 40'-0"

10 5 0 20 40

SCALE 1"=40'

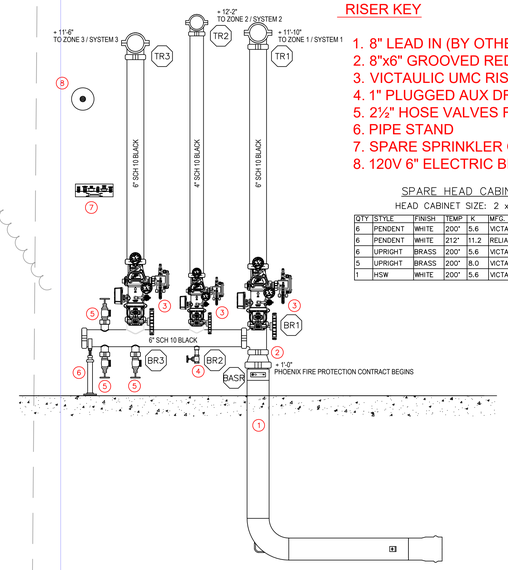

RISER KEY

1. 8" LEAD IN (BY OTHERS)
2. 8"x6" GROOVED REDUCER
3. VICTAULIC UMC RISER CHECK ASSEMBLY
4. 1" PLUGGED AUX DRAIN
5. 2½" HOSE VALVES FOR BACKFLOW TESTING
6. PIPE STAND
7. SPARE SPRINKLER CABINET (2 X 12)
8. 120V 6" ELECTRIC BELL

SPARE HEAD CABINET

HEAD CABINET SIZE: 2 x 12

QTY	STYLE	FINISH	TEMP	K	MFG.	SIN #
6	PENDENT	WHITE	200°	5.6	VICTAULIC	V3802
6	PENDENT	WHITE	212°	11.2	RELIABLE	R7146
6	UPRIGHT	BRASS	200°	5.6	VICTAULIC	V2704
5	UPRIGHT	BRASS	200°	8.0	VICTAULIC	V3402
1	HSW	WHITE	200°	5.6	VICTAULIC	V2710

RISER DETAIL

1/2"= 1'-0"

½ ¼ 0 1 2

SCALE 1/2"=1'-0"

WATER FLOW TEST REPORT

HYDRANT # & LOCATION: Existing Hydrants US-401 DATE: 7/17/2025

TEST BY: Debby Autry Day or Week: Thursday TIME OF DAY: 10:00 MIN. OF FLOW: 5

WATER SUPPLIED BY: Harnett County

PURPOSE OF TEST: Existing Water Supply

DATA

FLOW HYDRANT(S)	A1	A2	A3
SIZE OPENING:	2.5		
COEFFICIENT:	0.9		
PITOT READING:	44		
GPM:	1119	0	0

TOTAL FLOW DURING TEST: 1119 GPM

STATIC READING: 88 PSI RESIDUAL: 73 PSI

RESULTS: AT 20 PSI RESIDUAL 2531 GPM AT 0 PSI 2909 GPM

ESTIMATED CONSUMPTION: 5595 GAL.

REMARKS: Flow Hydrant at 3483 US 401, Gauge Hydrant at Intersection US 401 and Joel Johnson Road
Witnessed By: James Lowery (Harnett County Water) Jake Monson (Phoenix Fire Protection)

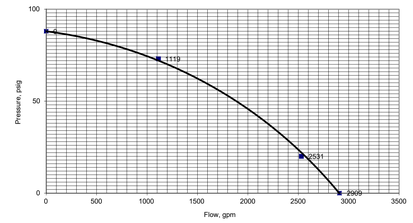

GENERAL NOTES

1. THE NEW FIRE SPRINKLER SYSTEM HAS BEEN DESIGNED IN ACCORDANCE WITH NFPA 13, 2016 EDITION.
2. CONTRACT BEGINS AT 1'-0" ABOVE FINISHED FLOOR.
3. UNDERGROUND PIPING IS BY OTHERS.
4. SITE PLAN PROVIDED FOR HYDRAULIC CALCULATIONS PURPOSES ONLY.

This is a life safety system and has been designed and/or hydraulically calculated as shown. These drawings have been submitted to the authority having jurisdiction for approval, code compliance, and/or permitting. Any deviations from design during installation due to conflicts after any coordination, submittal, or approval may require additional material, engineering costs, and re-submittal fees. Phoenix Fire Protection, Inc. is not liable for any additional costs due to changes required or requested from other trades or the General Contractor after approval and/or permitting has been issued. An approved change order will be required before any changes are made that deviate from the originally approved plans.

N

PLAN NORTH

N.C. LICENSE NO. PFS-13628

This fire sprinkler planning and design drawing has been prepared by Phoenix Fire Protection, Inc. as a licensed fire sprinkler contractor under Article 2 of Chapter 87 of the General Statutes for Phoenix Fire Protection, Inc.'s exclusive use pursuant to G.S. §89C-25(8), and Phoenix Fire Protection, Inc. must perform any and all installation work and other work performed in reliance on this drawing pursuant to G.S. §55B-15(a)(2). Installation work or any other work performed by any other person or entity in reliance on this drawing or any copy thereof is strictly prohibited. © 2025 Phoenix Fire Protection, Inc.

SHEET INDEX

FP-1 - Site Plan / Cover Sheet
FP-2 - Details
FP-3 - Area 100 - First Floor Piping Plan
FP-4 - Area 200 - First Floor Piping Plan
FP-5 - Area 300 - First Floor Piping Plan
FP-6 - Area 400 - First Floor Piping Plan
FP-7 - Area 500/600 - First Floor Piping Plan
FP-8 - Area 100 - Second Floor Piping Plan
FP-9 - Area 200 - Second Floor Piping Plan
FP-10 - Area 300 - Second Floor Piping Plan
FP-11 - Area 400 - Second Floor Piping Plan
FP-12 - Area 500/600 - Second Floor Piping Plan
FP-13 - Area 500/600 - Mech Platform Piping Plan

APPROVING AGENCIES

APPROVING AUTHORITY: HARNETT COUNTY
ADDRESS: P.O. BOX 65
CITY & STATE: LILLINGTON, NC 27546
PHONE NO.: (910) 893-7525
FAX NO.: (910) 893-2793
WEBSITE: www.harnett.org

ADDTIONAL NOTES

SEAL

REVISIONS

#	DATE	DESCRIPTION	BY
1	11/11/25	REVISED PER ENGINEER / ARCHITECT REVIEW	KM

SPRINKLER SUMMARY

SYM	TYPE	FINISH	TEMP	ORIF	"K"	NPT	MANUF.	SIN#	ESCUTCHEON	QTY.
	PENDENT	WHITE	175	1/2"	5.6	1/2"	VICTAULIC	V3802	CONCEALED	0
	PENDENT	WHITE	175	3/4"	11.2	3/4"	VICTAULIC	V1106	CONCEALED	0
	UPRIGHT	BRASS	200	1/2"	5.6	1/2"	VICTAULIC	V2704	N/A	0
	UPRIGHT (ON SPRIG)	BRASS	200	1/2"	5.6	1/2"	VICTAULIC	V2704	N/A	0
	UPRIGHT	BRASS	200	3/4"	8.0	3/4"	VICTAULIC	V3402	N/A	0
	SIDEWALL	WHITE	200	1/2"	5.6	1/2"	VICTAULIC	V2710	FLUSH	0
	DRY PENDENT	CHROME	200	1/2"	5.6	1/2"	VICTAULIC	V3614	EXTENDED	0
	DRY SIDEWALL	CHROME	200	3/4"	8.0	3/4"	TYCO	TY4356	STANDARD	0
										0
										0

TOTAL SPRINKLERS THIS PROJECT 1292 TOTAL SPRINKLERS THIS DRAWING 0

JOB #: C05-25

DATE: 07-25-2025

SCALE: As Noted

DRAWN BY: KM

CHK. BY: LDT

PHOENIX FIRE PROTECTION, INC.
P.O. BOX 2881
2863 LEE AVENUE
SANFORD, N.C. 27332
PHONE: (919) 774-3042 FAX: (919) 774-1492

Site Plan - Cover Sheet

Flatwoods Middle School

3544 US 401 South
Lillington, North Carolina

Larry Taylor 11/11/2025
LARRY DEAN TAYLOR DATE
NICET LEVEL IV, CERT. NO. 112126

SHEET No. FP-1 OF 13

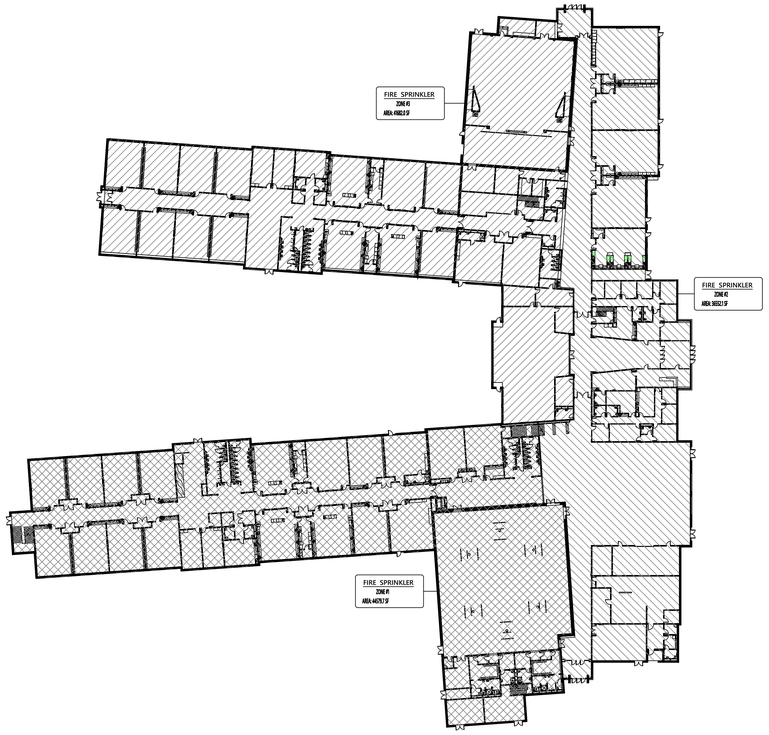

FIRST FLOOR ZONE PLAN

NO SCALE

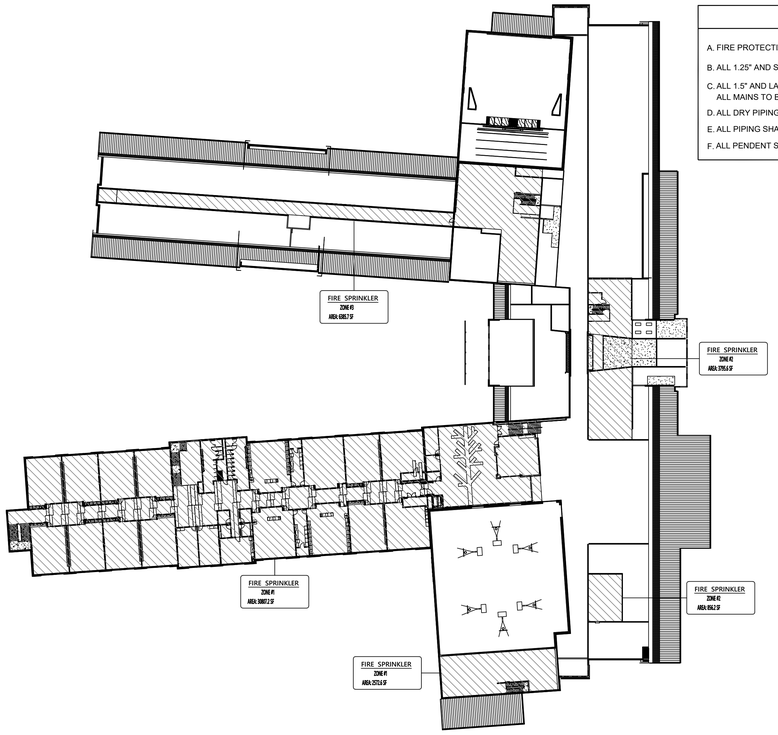

SECOND FLOOR ZONE PLAN

NO SCALE

GENERAL NOTES

A. FIRE PROTECTION SCOPE BEGINS AT 1'-0" AFF. UNDERGROUND IS BY OTHERS.

B. ALL 1.25" AND SMALLER PIPING TO BE BLACK, SCHEDULE 40 THREADED.

C. ALL 1.5" AND LARGER BRANCHLINES TO BE BLACK, SCHEDULE 10 GROOVED OR BLACK, SCHEDULE 40 THREADED. ALL MAINS TO BE BLACK, SCHEDULE 10 GROOVED.

D. ALL DRY PIPING, BALL DRIP DISCHARGES, AND DRAIN/TEST DISCHARGES TO BE HOT-DIPPED GALVANIZED.

E. ALL PIPING SHALL BE MANUFACTURED IN THE US.

F. ALL PENDENT SPRINKLERS IN CEILING GRID TO BE ON 36" VICTAULIC AH2 FLEX DROPS.

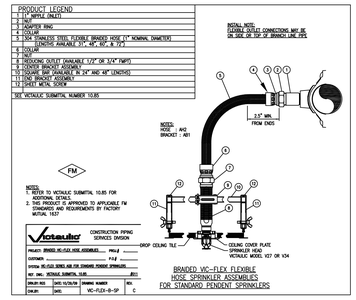

PIPE HANGER NOTES

1. Pipe hangers shall be installed as required by NFPA 13 for supporting and bracing sprinkler piping.
2. Hanging, bracing, and restraint of fire sprinkler piping shall be in accordance with chapter 9.3 of NFPA 13.
3. No other piping or devices are to be attached to the sprinkler pipe hanger system unless the hanger has been specifically designed for the additional loading.
4. This contract, (Phoenix Fire Protection), does not include any material or devices to improve the structural strength of the building to enable it to carry the load of the fire protection system. Any additional load bracing or structural strengthening is to be designed by the structural engineer and to be provided and installed by others.
5. The unsupported horizontal length between the end sprinkler and the last hanger on a line shall not be greater than the following:
   1" pipe - 36", 1 ¼" pipe - 48", 1 ½" or larger pipe - 60"
6. The cumulative horizontal length of an unsupported armover to a sprinkler, sprinkler drop, or sprig up shall not exceed 24" for steel pipe.

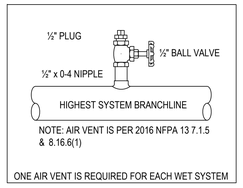

TYPICAL AIR VENT DETAIL

NO SCALE

TRAPEZE - 5'-6" SPAN TABLE 9.1.1.7.1 (a) 2013 Ed.		MINIMUM SIZE TRAPEZE SUPPORT			
PIPE SIZE	MODULUS	UNISTRUT	ANGLE	PIPE (Sch 10)	PIPE (Sch 40)
1" (Sch 40)	.30	1 5/8" x 2 7/16" x 12 ga	2" x 2" x 5/16"	2"	1 ½"
1-1/4" (Sch 40)	.31	1 5/8" x 2 7/16" x 12 ga	2" x 2" x 3/8"	2"	1 ½"
1-1/2" (Sch 40)	.33	1 5/8" x 2 7/16" x 12 ga	2" x 2" x 3/8"	2"	1 ½"
2" (Sch 40)	.36	1 5/8" x 2 7/16" x 12 ga	2 ½" x 2 ½" x ¼"	2"	2"
2-1/2" (Sch 10)	.37	1 5/8" x 2 7/16" x 12 ga	2 ½" x 2 ½" x ¼"	2"	2"
4" (Sch 10)	.47	1 5/8" x 3 ¼" x 12 ga	2 ½" x 2 ½" x 5/16"	2 ½"	2"
6" (Sch 10)	.66	1 5/8" x 3 ¼" x 12 ga	3" x 3" x 5/16"	2 ½"	2 ½"

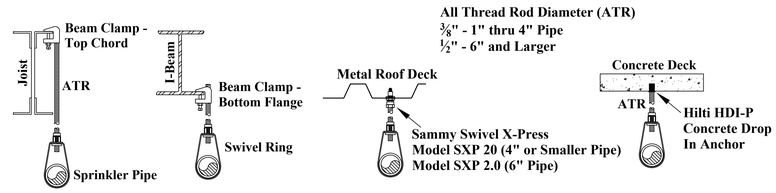

PIPE HANGER DETAILS

NO SCALE

Maximum Allowable Hanger Distances Per NFPA 13 TABLE 9.2.2.1(a)	
PIPE SIZE (ft.in.)	STEEL PIPE LENGTH
1"	12'-0"
1-1/4"	12'-0"
1-1/2"	15'-0"
2"	15'-0"
2-1/2"	15'-0"
4"	15'-0"
6"	15'-0"

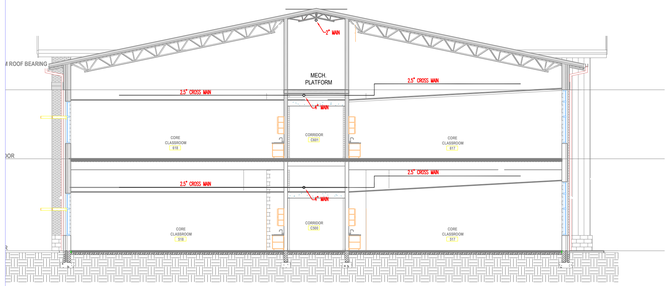

AREA 500 - SECTION
SCALE: 3/32" = 1'-0"

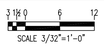

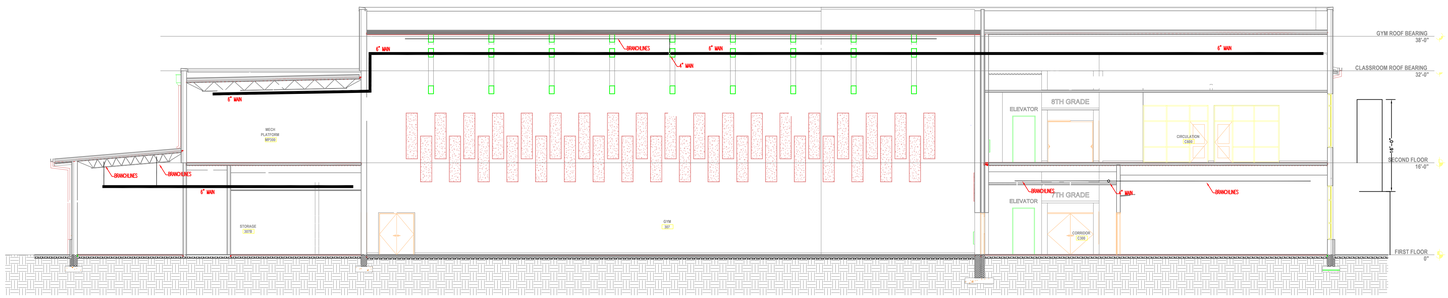

AREA 300 GYM - SECTION
SCALE: 3/32" = 1'-0"

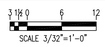

PLAN NORTH

N.C. LICENSE NO. PFS-13628

This fire sprinkler planning and design drawing has been prepared by Phoenix Fire Protection, Inc. as a licensed fire sprinkler contractor under Article 2 of Chapter 87 of the General Statutes for Phoenix Fire Protection, Inc.'s exclusive use pursuant to G.S. §89C-25(8), and Phoenix Fire Protection, Inc. must perform any and all installation work and other work performed in reliance on this drawing pursuant to G.S. §55B-15(a)(2). Installation work or any other work performed by any other person or entity in reliance on this drawing or any copy thereof is strictly prohibited. © 2025 Phoenix Fire Protection, Inc.

SHEET INDEX

FP-1 - Site Plan / Cover Sheet
FP-2 - Details
FP-3 - Area 100 - First Floor Piping Plan
FP-4 - Area 200 - First Floor Piping Plan
FP-5 - Area 300 - First Floor Piping Plan
FP-6 - Area 400 - First Floor Piping Plan
FP-7 - Area 500/600 - First Floor Piping Plan
FP-8 - Area 100 - Second Floor Piping Plan
FP-9 - Area 200 - Second Floor Piping Plan
FP-10 - Area 300 - Second Floor Piping Plan
FP-11 - Area 400 - Second Floor Piping Plan
FP-12 - Area 500/600 - Second Floor Piping Plan
FP-13 - Area 500/600 - Mech Platform Piping Plan

APPROVING AGENCIES

APPROVING AUTHORITY:	HARNETT COUNTY
ADDRESS:	P.O. BOX 65
CITY & STATE:	LILLINGTON, NC 27546
PHONE NO.:	(910) 893-7525
FAX NO.:	(910) 893-2793
WEBSITE:	www.harnett.org

ADDTIONAL NOTES

SEAL

REVISIONS

#	DATE	DESCRIPTION	BY
1	11/11/25	REVISED PER ENGINEER / ARCHITECT REVIEW	KM

SPRINKLER SUMMARY

SYM	TYPE	FINISH	TEMP	ORIF.	"K"	NPT	MANUF.	SIN#	ESCUTCHEON	QTY.
	PENDENT	WHITE	175	1/2"	5.6	1/2"	VICTAULIC	V3802	CONCEALED	0
	PENDENT	WHITE	175	3/4"	11.2	3/4"	VICTAULIC	V1106	CONCEALED	0
	UPRIGHT	BRASS	200	1/2"	5.6	1/2"	VICTAULIC	V2704	N/A	0
	UPRIGHT (ON SPRIG)	BRASS	200	1/2"	5.6	1/2"	VICTAULIC	V2704	N/A	0
	UPRIGHT	BRASS	200	3/4"	8.0	3/4"	VICTAULIC	V3402	N/A	0
	SIDEWALL	WHITE	200	1/2"	5.6	1/2"	VICTAULIC	V2710	FLUSH	0
	DRY PENDENT	CHROME	200	1/2"	5.6	1/2"	VICTAULIC	V3614	EXTENDED	0
	DRY SIDEWALL	CHROME	200	3/4"	8.0	3/4"	TYCO	TY4355	STANDARD	0
	TOTAL SPRINKLERS THIS PROJECT			1292			TOTAL SPRINKLERS THIS DRAWING			0

JOB #: C05-25
DATE: 07-25-2025
SCALE: As Noted
DRAWN BY: KM
CHK. BY: LDT

PHOENIX FIRE PROTECTION, INC.
P.O. BOX 2881
2863 LEE AVENUE
SANFORD, N.C. 27332
PHONE: (919) 774-3042 FAX: (919) 774-1492

Details

Flatwoods Middle School
3544 US 401 South
Lillington, North Carolina

Larry Taylor 11/11/2025
LARRY DEAN TAYLOR DATE
NICET LEVEL IV, CERT. NO. 112126

SHEET NO. FP-2 OF 13

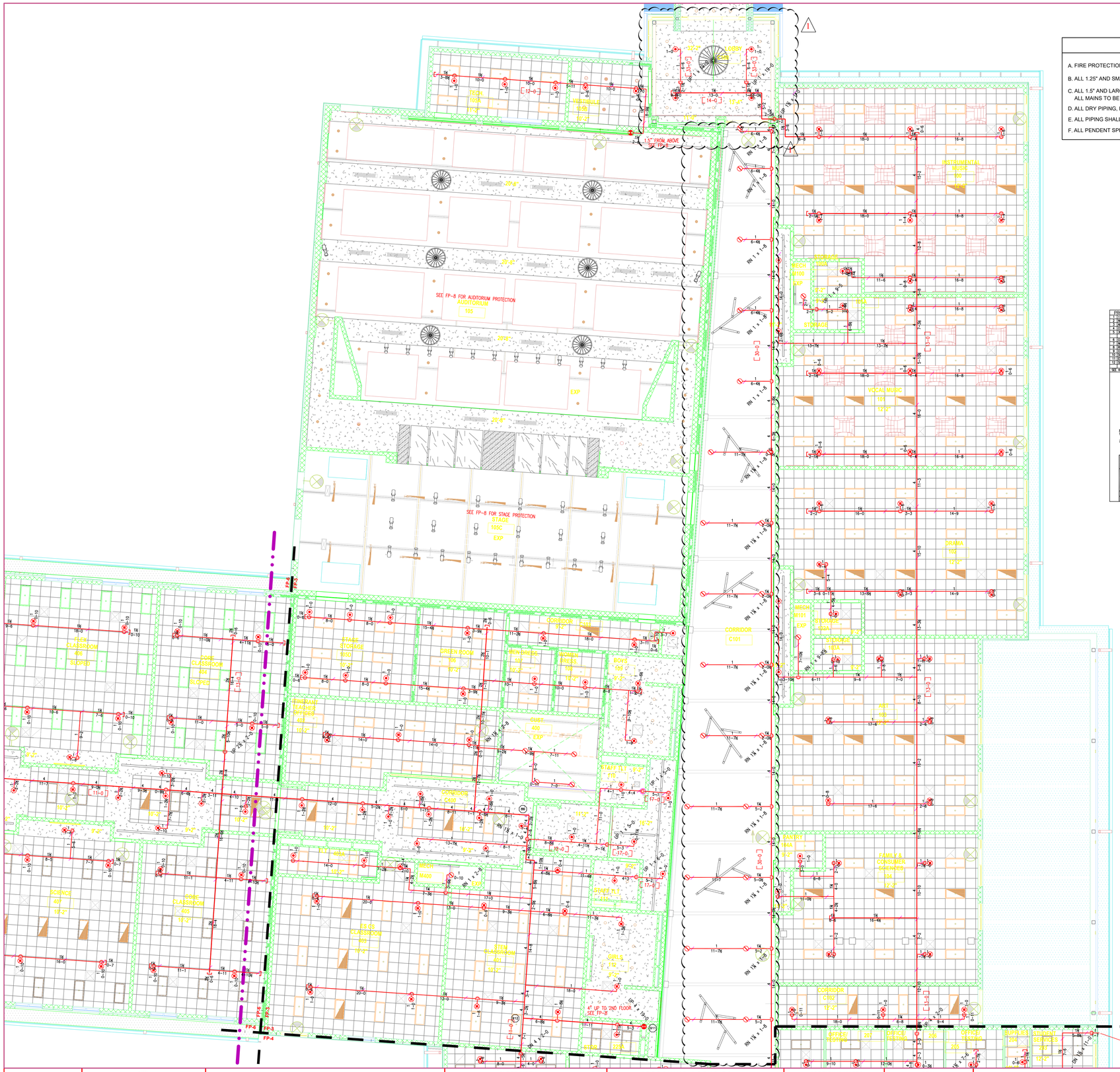

GENERAL NOTES

A. FIRE PROTECTION SCOPE BEGINS AT 1'-0" AFF. UNDERGROUND IS BY OTHERS.

B. ALL 1.25" AND SMALLER PIPING TO BE BLACK, SCHEDULE 40 THREADED.

C. ALL 1.5" AND LARGER BRANCHLINES TO BE BLACK, SCHEDULE 10 GROOVED OR BLACK, SCHEDULE 40 THREADED. ALL MAINS TO BE BLACK, SCHEDULE 10 GROOVED.

D. ALL DRY PIPING, BALL DRIP DISCHARGES, AND DRAIN/TEST DISCHARGES TO BE HOT-DIPPED GALVANIZED.

E. ALL PIPING SHALL BE MANUFACTURED IN THE US.

F. ALL PENDENT SPRINKLERS IN CEILING GRID TO BE ON 36" VICTAULIC AH2 FLEX DROPS.

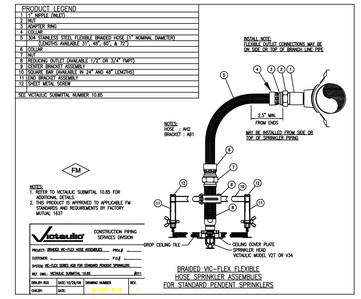

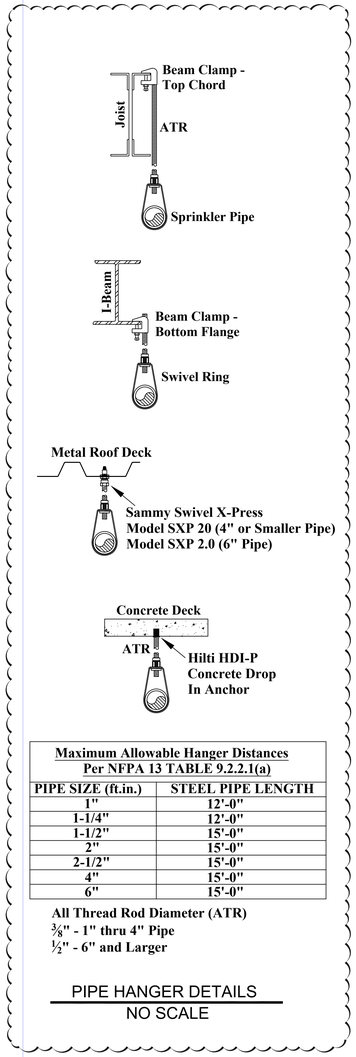

Maximum Allowable Hanger Distances Per NFPA 13 TABLE 9.2.2.1(a)

PIPE SIZE (ft.in.)	STEEL PIPE LENGTH
1"	12'-0"
1-1/4"	12'-0"
1-1/2"	15'-0"
2"	15'-0"
2-1/2"	15'-0"
4"	15'-0"
6"	15'-0"

All Thread Rod Diameter (ATR)
⅜" - 1" thru 4" Pipe
½" - 6" and Larger

PIPE HANGER DETAILS
NO SCALE

KEY PLAN

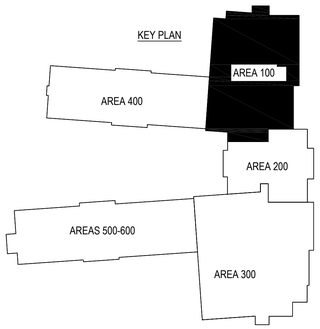

AREA 100 - FIRST FLOOR PIPING PLAN
SCALE: 1/8" = 1'-0"

SCALE 1/8"=1'-0"

FP-3
FP-4
AUX. DRAIN - INSTALL VALVE ABOVE CEILING GRID IN STUDENT SERVICES 203 AND LABEL CEILING TILE

PLAN NORTH

N.C. LICENSE NO. PFS-13628

This fire sprinkler planning and design drawing has been prepared by Phoenix Fire Protection, Inc. as a licensed fire sprinkler contractor under Article 2 of Chapter 87 of the General Statutes for Phoenix Fire Protection, Inc.'s exclusive use pursuant to G.S. §89C-25(8), and Phoenix Fire Protection, Inc. must perform any and all installation work and other work performed in reliance on this drawing pursuant to G.S. §55B-15(a)(2). Installation work or any other work performed by any other person or entity in reliance on this drawing or any copy thereof is strictly prohibited. © 2025 Phoenix Fire Protection, Inc.

SHEET INDEX

FP-1 - Site Plan / Cover Sheet
FP-2 - Details
FP-3 - Area 100 - First Floor Piping Plan
FP-4 - Area 200 - First Floor Piping Plan
FP-5 - Area 300 - First Floor Piping Plan
FP-6 - Area 400 - First Floor Piping Plan
FP-7 - Area 500/600 - First Floor Piping Plan
FP-8 - Area 100 - Second Floor Piping Plan
FP-9 - Area 200 - Second Floor Piping Plan
FP-10 - Area 300 - Second Floor Piping Plan
FP-11 - Area 400 - Second Floor Piping Plan
FP-12 - Area 500/600 - Second Floor Piping Plan
FP-13 - Area 500/600 - Mech Platform Piping Plan

APPROVING AGENCIES

APPROVING AUTHORITY:	HARNETT COUNTY
ADDRESS:	P.O. BOX 65
CITY & STATE:	LILLINGTON, NC 27546
PHONE NO.:	(910) 893-7525
FAX NO.:	(910) 893-2793
WEBSITE:	www.harnett.org

ADDTIONAL NOTES

SEAL

REVISIONS

#	DATE	DESCRIPTION	BY
1	11/11/25	REVISED PER ENGINEER / ARCHITECT REVIEW	KM

SPRINKLER SUMMARY

SYM	TYPE	FINISH	TEMP	ORIF.	"K"	NPT	MANUF.	SIN#	ESCUTCHEON	QTY.
	PENDENT	WHITE	175	1/2"	5.6	1/2"	VICTAULIC	V3802	CONCEALED	49
	PENDENT	WHITE	175	3/4"	11.2	3/4"	VICTAULIC	V1106	CONCEALED	54
	UPRIGHT	BRASS	200	1/2"	5.6	1/2"	VICTAULIC	V2704	N/A	30
	UPRIGHT (ON SPRIG)	BRASS	200	1/2"	5.6	1/2"	VICTAULIC	V2704	N/A	0
	UPRIGHT	BRASS	200	3/4"	8.0	3/4"	VICTAULIC	V3402	N/A	0
	SIDEWALL	WHITE	200	1/2"	5.6	1/2"	VICTAULIC	V2710	FLUSH	0
	DRY PENDENT	CHROME	200	1/2"	5.6	1/2"	VICTAULIC	V3614	EXTENDED	0
	DRY SIDEWALL	CHROME	200	3/4"	8.0	3/4"	TYCO	TY4355	STANDARD	0

TOTAL SPRINKLERS THIS PROJECT 1292 — TOTAL SPRINKLERS THIS DRAWING 133

JOB #: C05-25
DATE: 07-25-2025
SCALE: As Noted
DRAWN BY: KM
CHK. BY: LDT

PHOENIX FIRE PROTECTION, INC.
P.O. BOX 2881
2863 LEE AVENUE
SANFORD, N.C. 27332
PHONE: (919) 774-3042 FAX: (919) 774-1492

Area 100 - First Floor Piping Plan
Flatwoods Middle School
3544 US 401 South
Lillington, North Carolina

Larry Taylor 11/11/2025
LARRY DEAN TAYLOR DATE
NICET LEVEL IV, CERT. NO. 112126

SHEET No. FP-3 OF 13

GENERAL NOTES

A. FIRE PROTECTION SCOPE BEGINS AT 1'-0" AFF. UNDERGROUND IS BY OTHERS.

B. ALL 1.25" AND SMALLER PIPING TO BE BLACK, SCHEDULE 40 THREADED.

C. ALL 1.5" AND LARGER BRANCHLINES TO BE BLACK, SCHEDULE 10 GROOVED OR BLACK, SCHEDULE 40 THREADED. ALL MAINS TO BE BLACK, SCHEDULE 10 GROOVED.

D. ALL DRY PIPING, BALL DRIP DISCHARGES, AND DRAIN/TEST DISCHARGES TO BE HOT-DIPPED GALVANIZED.

E. ALL PIPING SHALL BE MANUFACTURED IN THE US.

F. ALL PENDENT SPRINKLERS IN CEILING GRID TO BE ON 36" VICTAULIC AH2 FLEX DROPS.

PRODUCT LEGEND
1	LIP NIPPLE (INLET)
2	NUT
3	ADAPTER RING
4	COLLAR
5	304 STAINLESS STEEL FLEXIBLE BRAIDED HOSE (1" NOMINAL DIAMETER) LENGTHS AVAILABLE 31"-84", 90", & 96" O.A.
6	COLLAR
7	NUT
8	RECESSING OUTLET (AVAILABLE 1/2" OR 3/4" TMPT)
9	CENTER BRACKET ASSEMBLY
10	SQUARE BAR (AVAILABLE IN 24" AND 48" LENGTHS)
11	END BRACKET ASSEMBLY
12	SHEET METAL SCREW

SEE VICTAULIC SUBMITTAL NUMBER 10.85

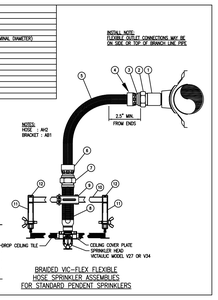

NOTES:
1. REFER TO VICTAULIC SUBMITTAL 10.85 FOR ADDITIONAL DETAILS.
2. THIS PRODUCT IS APPROVED TO APPLICABLE FM STANDARDS AND REQUIREMENTS BY FACTORY MUTUAL GLOBAL.

FM

Victaulic — CONSTRUCTION PIPING SERVICES DIVISION

PRODUCT: BRAIDED VIC-FLEX HOSE ASSEMBLIES — PROJ #: _____
CUSTOMER: _____ P.O.# _____
SYSTEM: VIC-FLEX SERIES AH FOR STANDARD PENDENT SPRINKLERS
REF. DWG.: RECTANGLE, DIAMETER, 10.85 — REV.:
DRAWN BY: — DATE: 10/15/14 — DRAWING NUMBER: VIC-FLEX-S-01 — REV.: A
CHK.BY: — DATE: _____

BRAIDED VIC-FLEX FLEXIBLE HOSE SPRINKLER ASSEMBLIES FOR STANDARD PENDENT SPRINKLERS

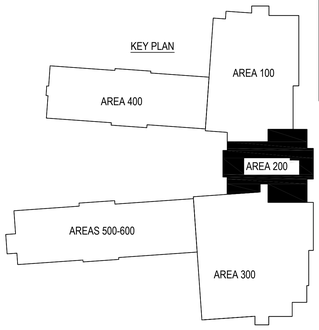

AREA 200 - FIRST FLOOR PIPING PLAN
SCALE: 1/8" = 1'-0"

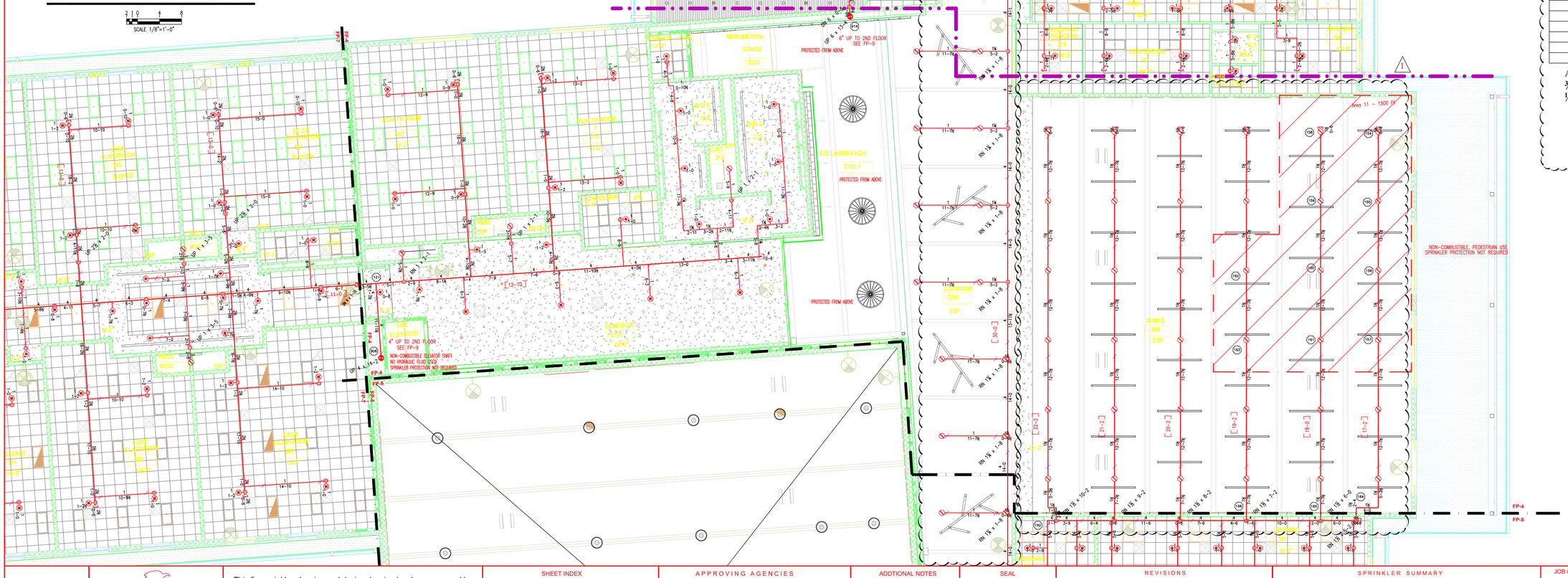

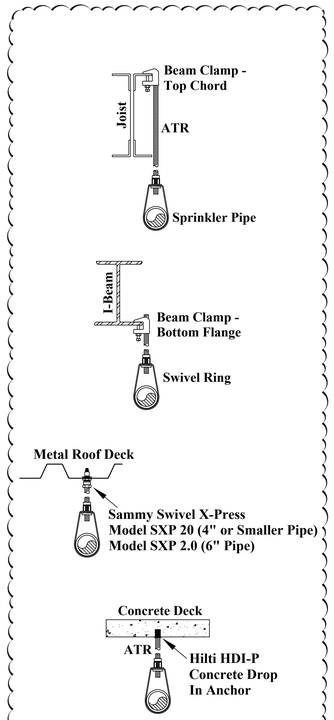

Maximum Allowable Hanger Distances Per NFPA 13 TABLE 9.2.2.1(a)	
PIPE SIZE (ft.in.)	STEEL PIPE LENGTH
1"	12'-0"
1-1/4"	12'-0"
1-1/2"	15'-0"
2"	15'-0"
2-1/2"	15'-0"
4"	15'-0"
6"	15'-0"

All Thread Rod Diameter (ATR)
⅜" - 1" thru 4" Pipe
½" - 6" and Larger

PIPE HANGER DETAILS
NO SCALE

Hydraulically Calculated System

This system as shown on: PHOENIX FIRE PROTECTION
company print no: FP-4 dated: 07-25-2025
for: FLATWOODS MIDDLE SCHOOL
at: 300 DINING contract no: C05-25
is designed to discharge a rate of: 0.10 gpm (L/min) per sq ft (m2) of floor area over the maximum area of: 1500 sq ft (m2) when supplied with a water rate of: 313 gpm (L/min) at: 36 psi (bars) at the base of the riser
Hose stream allowance of: 100 gpm (L/min) is included in the above.
Occupancy classification: LIGHT
Commodity classification: N/A
Maximum storage height: N/A
Installed by: PHOENIX FIRE PROTECTION

FLATWOODS MIDDLE SCHOOL AREA 11.WXF
CALCULATION PER:2013 NFPA 13 11.2.3.4.2
36.77 PSI (42.5%) SAFETY MARGIN

PLAN NORTH

N.C. LICENSE NO. PFS-13628

This fire sprinkler planning and design drawing has been prepared by Phoenix Fire Protection, Inc. as a licensed fire sprinkler contractor under Article 2 of Chapter 87 of the General Statutes for Phoenix Fire Protection, Inc.'s exclusive use pursuant to G.S. §89C-25(8), and Phoenix Fire Protection, Inc. must perform any and all installation work and other work performed in reliance on this drawing pursuant to G.S. §55B-15(a)(2). Installation work or any other work performed by any other person or entity in reliance on this drawing or any copy thereof is strictly prohibited. © 2025 Phoenix Fire Protection, Inc.

SHEET INDEX

FP-1 - Site Plan / Cover Sheet
FP-2 - Details
FP-3 - Area 100 - First Floor Piping Plan
FP-4 - Area 200 - First Floor Piping Plan
FP-5 - Area 300 - First Floor Piping Plan
FP-6 - Area 400 - First Floor Piping Plan
FP-7 - Area 500/600 - First Floor Piping Plan
FP-8 - Area 100 - Second Floor Piping Plan
FP-9 - Area 200 - Second Floor Piping Plan
FP-10 - Area 300 - Second Floor Piping Plan
FP-11 - Area 400 - Second Floor Piping Plan
FP-12 - Area 500/600 - Second Floor Piping Plan
FP-13 - Area 500/600 - Mech Platform Piping Plan

APPROVING AGENCIES

APPROVING AUTHORITY:	HARNETT COUNTY
ADDRESS:	P.O. BOX 65
CITY & STATE:	LILLINGTON, NC 27546
PHONE NO.:	(910) 893-7525
FAX NO.:	(910) 893-2793
WEBSITE:	www.harnett.org

ADDTIONAL NOTES

SEAL

REVISIONS

#	DATE	DESCRIPTION	BY
1	11/11/25	REVISED PER ENGINEER / ARCHITECT REVIEW	KM

SPRINKLER SUMMARY

SYM	TYPE	FINISH	TEMP	ORIF.	"K"	NPT	MANUF.	S/N#	ESCUTCHEON	QTY.
	PENDENT	WHITE	175	1/2"	5.6	1/2"	VICTAULIC	V3602	CONCEALED	78
	PENDENT	WHITE	175	3/4"	11.2	3/4"	VICTAULIC	V1106	CONCEALED	33
	UPRIGHT	BRASS	200	1/2"	5.6	1/2"	VICTAULIC	V2704	N/A	79
	UPRIGHT (ON SPRIG)	BRASS	200	1/2"	5.6	1/2"	VICTAULIC	V2704	N/A	0
	UPRIGHT	BRASS	200	3/4"	8.0	3/4"	VICTAULIC	V3402	N/A	0
	SIDEWALL	WHITE	200	1/2"	5.6	1/2"	VICTAULIC	V2710	FLUSH	3
	DRY PENDENT	CHROME	200	1/2"	5.6	1/2"	VICTAULIC	V3614	EXTENDED	0
	DRY SIDEWALL	CHROME	200	3/4"	8.0	3/4"	TYCO	TY4355	STANDARD	0
	TOTAL SPRINKLERS THIS PROJECT							TOTAL SPRINKLERS THIS DRAWING		193

JOB #: C05-25
DATE: 07-25-2025
SCALE: As Noted
DRAWN BY: KM
CHK. BY: LDT

PHOENIX FIRE PROTECTION, INC.
P.O. BOX 2881
2863 LEE AVENUE
SANFORD, N.C. 27332
PHONE: (919) 774-3042 FAX: (919) 774-1492

Area 200 - First Floor Piping Plan

Flatwoods Middle School
3544 US 401 South
Lillington, North Carolina

Larry Taylor 11/11/2025
LARRY DEAN TAYLOR DATE
NICET LEVEL IV, CERT. NO. 112126

SHEET No. FP-4 OF 13

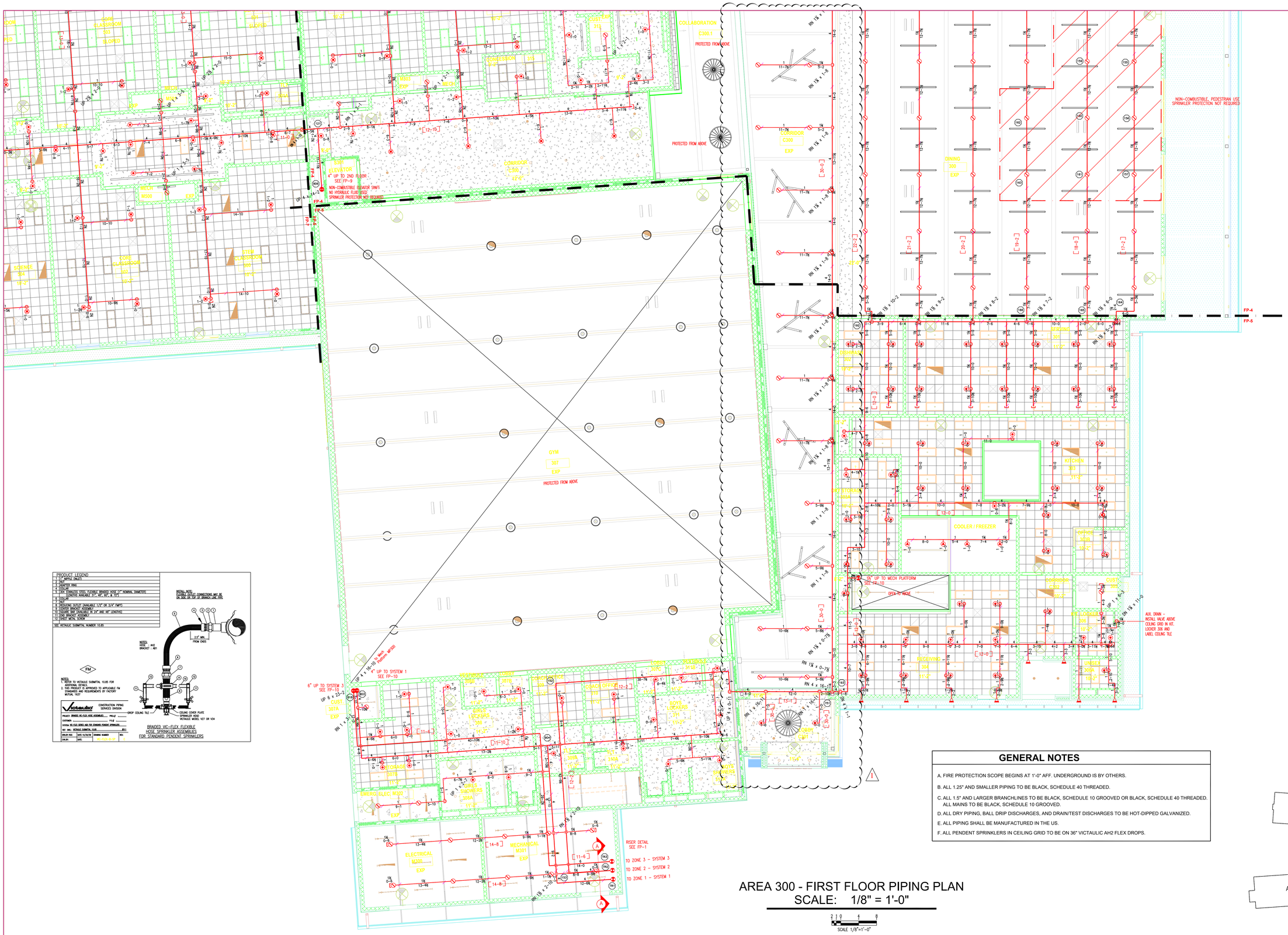

Top Beam Clamp Hanger

1"– 4" PIPE 3/8" ROD
5"– 8" PIPE 1/2" ROD
10" PIPE 5/8" ROD

TYPICAL #01 HANGER
NO SCALE

1 -- 1" A.T.R.
1 -- 1" Swivel Ring (PHD #141)
1 -- 1" Top Beam Clamp (PHD #350)

Hilti Drop In Hanger

1"– 4" PIPE 3/8" ROD
5"– 8" PIPE 1/2" ROD

TYPICAL #05 HANGER
NO SCALE

1 -- 1" A.T.R.
1 -- 1" Swivel Ring (PHD #141)
1 -- 1" Hilti HDI-P Drop-In Anchor

Top Beam Clamp Trapeze Hanger

Uni-Strut size to comply with NFPA 13

NOTE: Use #04A Hanger with Uni-Strut

1"– 4" PIPE 3/8" ROD
5"– 8" PIPE 1/2" ROD

TYPICAL #17B HANGER
NO SCALE

1 -- 3 x 1"x 12 ga. x Length Uni-Strut (A + 6")
2 -- 1" x 8" AT Stud for Attachment to Unistrut
2 -- 1" Top Beam Clamp (PHD #350)
6 -- 1" Nuts
6 -- 1" Fender Washers

GENERAL NOTES

A. FIRE PROTECTION SCOPE BEGINS AT 1'-0" AFF. UNDERGROUND IS BY OTHERS.

B. ALL 1.25" AND SMALLER PIPING TO BE BLACK, SCHEDULE 40 THREADED.

C. ALL 1.5" AND LARGER BRANCHLINES TO BE BLACK, SCHEDULE 10 GROOVED OR BLACK, SCHEDULE 40 THREADED. ALL MAINS TO BE BLACK, SCHEDULE 10 GROOVED.

D. ALL DRY PIPING, BALL DRIP DISCHARGES, AND DRAIN/TEST DISCHARGES TO BE HOT-DIPPED GALVANIZED.

E. ALL PIPING SHALL BE MANUFACTURED IN THE US.

F. ALL PENDENT SPRINKLERS IN CEILING GRID TO BE ON 36" VICTAULIC AH2 FLEX DROPS.

AREA 300 - FIRST FLOOR PIPING PLAN
SCALE: 1/8" = 1'-0"

2 1 0 4 8
SCALE 1/8"=1'-0"

KEY PLAN

PLAN NORTH

N.C. LICENSE NO. PFS-13628

This fire sprinkler planning and design drawing has been prepared by Phoenix Fire Protection, Inc. as a licensed fire sprinkler contractor under Article 2 of Chapter 87 of the General Statutes for Phoenix Fire Protection, Inc.'s exclusive use pursuant to G.S. §89C-25(8), and Phoenix Fire Protection, Inc. must perform any and all installation work and other work performed in reliance on this drawing pursuant to G.S. §55B-15(a)(2). Installation work or any other work performed by any other person or entity in reliance on this drawing or any copy thereof is strictly prohibited. © 2025 Phoenix Fire Protection, Inc.

SHEET INDEX

FP-1 - Site Plan / Cover Sheet
FP-2 - Details
FP-3 - Area 100 - First Floor Piping Plan
FP-4 - Area 200 - First Floor Piping Plan
FP-5 - Area 300 - First Floor Piping Plan
FP-6 - Area 400 - First Floor Piping Plan
FP-7 - Area 500/600 - First Floor Piping Plan
FP-8 - Area 100 - Second Floor Piping Plan
FP-9 - Area 200 - Second Floor Piping Plan
FP-10 - Area 300 - Second Floor Piping Plan
FP-11 - Area 400 - Second Floor Piping Plan
FP-12 - Area 500/600 - Second Floor Piping Plan
FP-13 - Area 500/600 - Mech Platform Piping Plan

APPROVING AGENCIES

APPROVING AUTHORITY: HARNETT COUNTY
ADDRESS: P.O. BOX 65
CITY & STATE: LILLINGTON, NC 27546
PHONE NO.: (910) 893-7525
FAX NO.: (910) 893-2793
WEBSITE: www.harnett.org

ADDTIONAL NOTES

SEAL

REVISIONS

#	DATE	DESCRIPTION	BY
1	11/11/25	REVISED PER ENGINEER / ARCHITECT REVIEW	KM

SPRINKLER SUMMARY

SYM	TYPE	FINISH	TEMP	ORIF.	"K"	NPT	MANUF.	SIN#	ESCUTCHEON	QTY.
	PENDENT	WHITE	175	1/2"	5.6	1/2"	VICTAULIC	V3802	CONCEALED	77
	PENDENT	WHITE	175	3/4"	11.2	3/4"	VICTAULIC	V1106	CONCEALED	1
	UPRIGHT	BRASS	200	1/2"	5.6	1/2"	VICTAULIC	V2704	N/A	26
	UPRIGHT (ON SPRIG)	BRASS	200	1/2"	5.6	1/2"	VICTAULIC	V2704	N/A	0
	UPRIGHT	BRASS	200	3/4"	8.0	3/4"	VICTAULIC	V3402	N/A	0
	SIDEWALL	WHITE	200	1/2"	5.6	1/2"	VICTAULIC	V2710	FLUSH	0
	DRY PENDENT	CHROME	200	1/2"	5.6	1/2"	VICTAULIC	V3614	EXTENDED	4
	DRY SIDEWALL	CHROME	200	3/4"	8.0	3/4"	TYCO	TY4355	STANDARD	8
	TOTAL SPRINKLERS THIS PROJECT				12X2		TOTAL SPRINKLERS THIS DRAWING			116

JOB #: C05-25
DATE: 07-25-2025
SCALE: As Noted
DRAWN BY: KM
CHK. BY: LDT

PHOENIX FIRE PROTECTION, INC.
P.O. BOX 2881
2863 LEE AVENUE
SANFORD, N.C. 27332
PHONE: (919) 774-3042 FAX: (919) 774-1492

Area 300 - First Floor Piping Plan

Flatwoods Middle School
3544 US 401 South
Lillington, North Carolina

LARRY DIBAN TAYLOR 11/11/2025
NICET LEVEL IV, CERT. NO. 112126

SHEET No. FP-5 OF 13

Hydraulically Calculated System

This system as shown on	PHOENIX FIRE PROTECTION
company print no.	FP-6 dated 07-25-2025
for	FLATWOODS MIDDLE SCHOOL
at	400 FIRST FLOOR contract no. C05-25
is designed to discharge a rate of	0.10 gpm
(L/min) per sq ft (m2) of floor area over the maximum area of	
	1300 sq ft (m2) when supplied
with a water rate of	348 gpm (L/min)
at	49 psi (bars) at the base of the riser
Hose stream allowance of	100 gpm (L/min)
is included in the above.	
Occupancy classification	LIGHT
Commodity classification	N/A
Maximum storage height	N/A
Installed by	PHOENIX FIRE PROTECTION

FLATWOODS MIDDLE SCHOOL AREA 7.WXF
CALCULATION INCLUDES UP TO 30% AREA REDUCTION PER NFPA 13 11.2.3.2.3.1 & 30% AREA INCREASE PER NFPA 13 11.2.3.2.4. 23.17 PSI (26.9Pa) SAFETY MARGIN

Top Beam Clamp Hanger

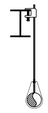

TYPICAL #01 HANGER
NO SCALE

1 -- 9" A.T.R.
1 -- 9" Swivel Ring (PHD #141)
1 -- 9" Top Beam Clamp (PHD #350)

Hilti Drop In Hanger

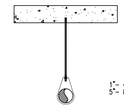

TYPICAL #05 HANGER
NO SCALE

1 -- 9" A.T.R.
1 -- 9" Swivel Ring (PHD #141)
1 -- 9" Hilti HDI-P Drop-In Anchor

Top Beam Clamp Trapeze Hanger

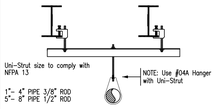

TYPICAL #17B HANGER
NO SCALE

1 -- 1" x 1"x 12 ga. x Length Uni-Strut (A + 6")
2 -- 1" x 8" All Stud for Attachment to Unistrut
2 -- 1" Top Beam Clamp (PHD #350)
6 -- 1" Nuts
6 -- 1" Fender Washers

KEY PLAN

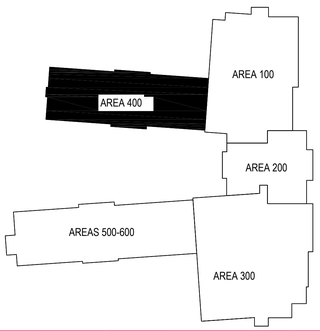

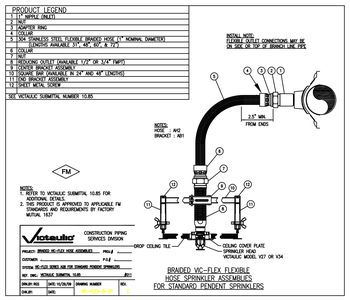

AREA 400 - FIRST FLOOR PIPING PLAN
SCALE: 1/8" = 1'-0"

2 1 0 4 8
SCALE 1/8"=1'-0"

GENERAL NOTES

A. FIRE PROTECTION SCOPE BEGINS AT 1'-0" AFF. UNDERGROUND IS BY OTHERS.

B. ALL 1.25" AND SMALLER PIPING TO BE BLACK, SCHEDULE 40 THREADED.

C. ALL 1.5" AND LARGER BRANCHLINES TO BE BLACK, SCHEDULE 10 GROOVED OR BLACK, SCHEDULE 40 THREADED. ALL MAINS TO BE BLACK, SCHEDULE 10 GROOVED.

D. ALL DRY PIPING, BALL DRIP DISCHARGES, AND DRAIN/TEST DISCHARGES TO BE HOT-DIPPED GALVANIZED.

E. ALL PIPING SHALL BE MANUFACTURED IN THE US.

F. ALL PENDENT SPRINKLERS IN CEILING GRID TO BE ON 36" VICTAULIC AH2 FLEX DROPS.

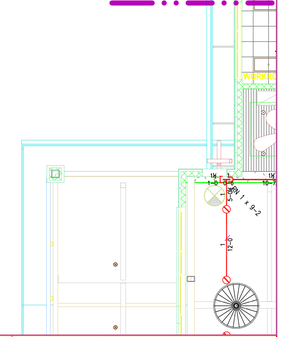

N
PLAN NORTH

N.C. LICENSE NO. PFS-13628

This fire sprinkler planning and design drawing has been prepared by Phoenix Fire Protection, Inc. as a licensed fire sprinkler contractor under Article 2 of Chapter 87 of the General Statutes for Phoenix Fire Protection, Inc.'s exclusive use pursuant to G.S. §89C-25(8), and Phoenix Fire Protection, Inc. must perform any and all installation work and other work performed in reliance on this drawing pursuant to G.S. §55B-15(a)(2). Installation work or any other work performed by any other person or entity in reliance on this drawing or any copy thereof is strictly prohibited. © 2025 Phoenix Fire Protection, Inc.

SHEET INDEX

FP-1 - Site Plan / Cover Sheet
FP-2 - Details
FP-3 - Area 100 - First Floor Piping Plan
FP-4 - Area 200 - First Floor Piping Plan
FP-5 - Area 300 - First Floor Piping Plan
FP-6 - Area 400 - First Floor Piping Plan
FP-7 - Area 500/600 - First Floor Piping Plan
FP-8 - Area 100 - Second Floor Piping Plan
FP-9 - Area 200 - Second Floor Piping Plan
FP-10 - Area 300 - Second Floor Piping Plan
FP-11 - Area 400 - Second Floor Piping Plan
FP-12 - Area 500/600 - Second Floor Piping Plan
FP-13 - Area 500/600 - Mech Platform Piping Plan

APPROVING AGENCIES

APPROVING AUTHORITY:	HARNETT COUNTY
ADDRESS:	P.O. BOX 65
CITY & STATE:	LILLINGTON, NC 27546
PHONE NO.:	(910) 893-7525
FAX NO.:	(910) 893-2793
WEBSITE:	www.harnett.org

ADDTIONAL NOTES

SEAL

REVISIONS

#	DATE	DESCRIPTION	BY
1	11/11/25	REVISED PER ENGINEER / ARCHITECT REVIEW	KM

SPRINKLER SUMMARY

SYM	TYPE	FINISH	TEMP	ORIF.	"K"	NPT	MANUF.	S/N#	ESCUTCHEON	QTY.
	PENDENT	WHITE	175	1/2"	5.6	1/2"	VICTAULIC	V3802	CONCEALED	56
	PENDENT	WHITE	175	3/4"	11.2	3/4"	VICTAULIC	V1106	CONCEALED	88
	UPRIGHT	BRASS	200	1/2"	5.6	1/2"	VICTAULIC	V2704	N/A	2
	UPRIGHT (ON SPRIG)	BRASS	200	1/2"	5.6	1/2"	VICTAULIC	V2704	N/A	0
	UPRIGHT	BRASS	200	3/4"	8.0	3/4"	VICTAULIC	V3402	N/A	0
	SIDEWALL	WHITE	200	1/2"	5.6	1/2"	VICTAULIC	V2710	FLUSH	1
	DRY PENDENT	CHROME	200	1/2"	5.6	1/2"	VICTAULIC	V9614	EXTENDED	0
	DRY SIDEWALL	CHROME	200	3/4"	8.0	3/4"	TYCO	TY4355	STANDARD	0
	TOTAL SPRINKLERS THIS PROJECT			1292			TOTAL SPRINKLERS THIS DRAWING			147

JOB #: C05-25
DATE: 07-25-2025
SCALE: As Noted
DRAWN BY: KM
CHK. BY: LDT

PHOENIX FIRE PROTECTION, INC.
P.O. BOX 2881
2863 LEE AVENUE
SANFORD, N.C. 27332
PHONE: (919) 774-3042 FAX: (919) 774-1492

Area 400 - First Floor Piping Plan
Flatwoods Middle School
3544 US 401 South
Lillington, North Carolina

Larry Taylor 11/11/2025
LARRY DEAN TAYLOR DATE
NICET LEVEL IV, CERT. NO. 112126

SHEET No. FP-6 OF 13

Hydraulically Calculated System

This system as shown on	PHOENIX FIRE PROTECTION
company print no	FP-7
dated	07-25-2025
for	FLATWOODS MIDDLE SCHOOL
at	500/600 FIRST FLOOR
contract no	C05-25
is designed to discharge a rate of	0.10 gpm
(L/min) per sq ft (m2) of floor area over the maximum area of	1372 sq ft (m2)
when supplied with a water rate of	358 gpm (L/min)
at	52 psi (bars) at the base of the riser
Hose stream allowance of	100 gpm (L/min) is included in the above.
Occupancy classification	LIGHT
Commodity classification	N/A
Maximum storage height	N/A
Installed by	PHOENIX FIRE PROTECTION

FLATWOODS MIDDLE SCHOOL AREA 9.WXF
CALCULATION INCLUDES UP TO 37% AREA REDUCTION PER NFPA 13 11.2.3.2.3.1 & 30% AREA INCREASE PER NFPA 13 11.2.3.2.4_19.76 PSI (22.9%) SAFETY MARGIN

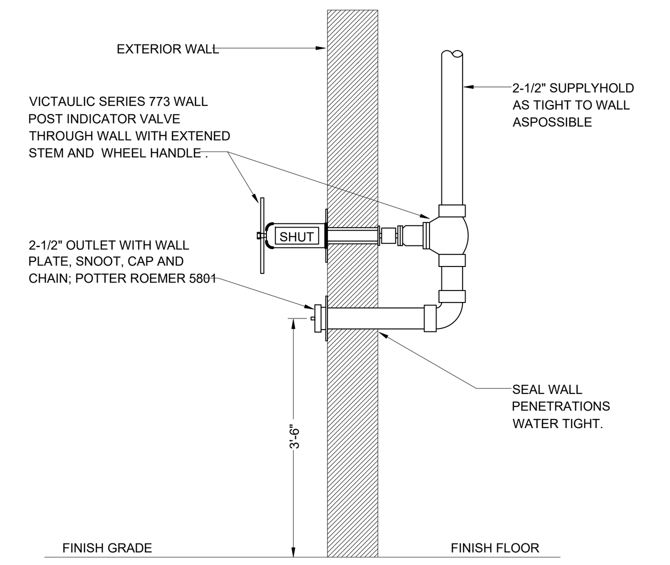

FIRE HOSE VALVE CONNECTION
NO SCALE

GENERAL NOTES

A. FIRE PROTECTION SCOPE BEGINS AT 1'-0" AFF. UNDERGROUND IS BY OTHERS.
B. ALL 1.25" AND SMALLER PIPING TO BE BLACK, SCHEDULE 40 THREADED.
C. ALL 1.5" AND LARGER BRANCHLINES TO BE BLACK, SCHEDULE 10 GROOVED OR BLACK, SCHEDULE 40 THREADED. ALL MAINS TO BE BLACK, SCHEDULE 10 GROOVED.
D. ALL DRY PIPING, BALL DRIP DISCHARGES, AND DRAIN/TEST DISCHARGES TO BE HOT-DIPPED GALVANIZED.
E. ALL PIPING SHALL BE MANUFACTURED IN THE US.
F. ALL PENDENT SPRINKLERS IN CEILING GRID TO BE ON 36" VICTAULIC AH2 FLEX DROPS.

Top Beam Clamp Hanger

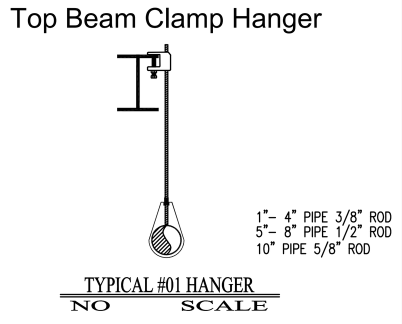

TYPICAL #01 HANGER
NO SCALE

1 -- ?" A.T.R.
1 -- ?" Swivel Ring (PHD #141)
1 -- ?" Top Beam Clamp (PHD #350)

Hilti Drop In Hanger

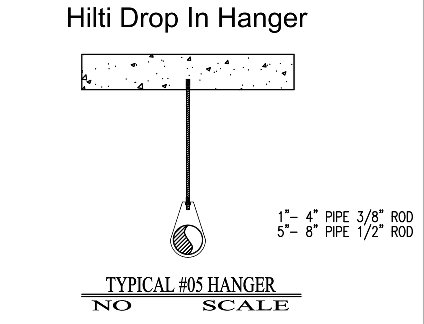

TYPICAL #05 HANGER
NO SCALE

1 -- ?" A.T.R.
1 -- ?" Swivel Ring (PHD #141)
1 -- ?" Hilti HDI-P Drop-In Anchor

Top Beam Clamp Trapeze Hanger

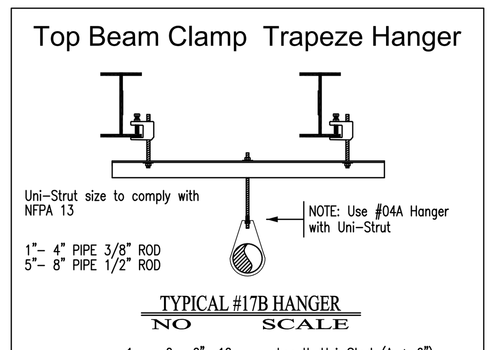

TYPICAL #17B HANGER
NO SCALE

1 -- ? x ?"x 12 ga. x Length Uni-Strut (A + 6")
2 -- ?" x 8" AT Stud for Attachment to Unistrut
2 -- ?" Top Beam Clamp (PHD #350)
6 -- ?" Nuts
6 -- ?" Fender Washers

AREA 500/600 - FIRST FLOOR PIPING PLAN
SCALE: 1/8" = 1'-0"

2 1 0 4 8
SCALE 1/8"=1'-0"

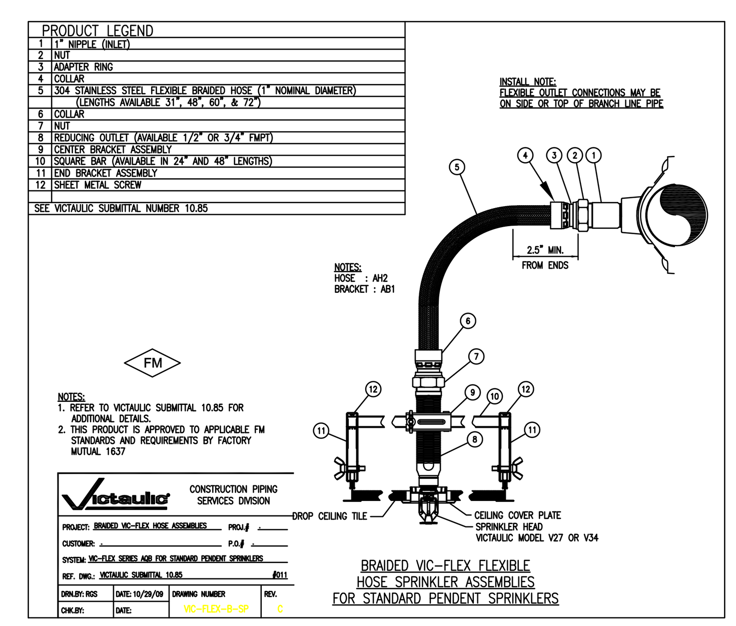

KEY PLAN

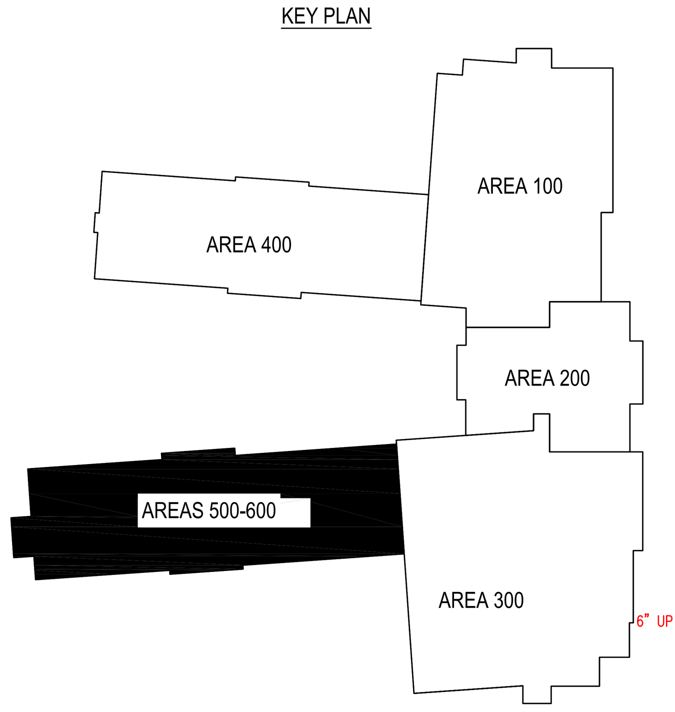

PLAN NORTH

N.C. LICENSE NO. PFS-13628

This fire sprinkler planning and design drawing has been prepared by Phoenix Fire Protection, Inc. as a licensed fire sprinkler contractor under Article 2 of Chapter 87 of the General Statutes for Phoenix Fire Protection, Inc.'s exclusive use pursuant to G.S. §89C-25(8), and Phoenix Fire Protection, Inc. must perform any and all installation work and other work performed in reliance on this drawing pursuant to G.S. §55B-15(a)(2). Installation work or any other work performed by any other person or entity in reliance on this drawing or any copy thereof is strictly prohibited. © 2025 Phoenix Fire Protection, Inc.

SHEET INDEX

FP-1 - Site Plan / Cover Sheet
FP-2 - Details
FP-3 - Area 100 - First Floor Piping Plan
FP-4 - Area 200 - First Floor Piping Plan
FP-5 - Area 300 - First Floor Piping Plan
FP-6 - Area 400 - First Floor Piping Plan
FP-7 - Area 500/600 - First Floor Piping Plan
FP-8 - Area 100 - Second Floor Piping Plan
FP-9 - Area 200 - Second Floor Piping Plan
FP-10 - Area 300 - Second Floor Piping Plan
FP-11 - Area 400 - Second Floor Piping Plan
FP-12 - Area 500/600 - Second Floor Piping Plan
FP-13 - Area 500/600 - Mech Platform Piping Plan

APPROVING AGENCIES

APPROVING AUTHORITY:	HARNETT COUNTY
ADDRESS:	P.O. BOX 65
CITY & STATE:	LILLINGTON, NC 27546
PHONE NO.:	(910) 893-7525
FAX NO.:	(910) 893-2793
WEBSITE:	www.harnett.org

ADDTIONAL NOTES

SEAL

REVISIONS

#	DATE	DESCRIPTION	BY
1	11/11/25	REVISED PER ENGINEER / ARCHITECT REVIEW	KM

SPRINKLER SUMMARY

SYM	TYPE	FINISH	TEMP	ORIF.	"K"	NPT	MANUF.	SIN#	ESCUTCHEON	QTY.
⦿	PENDENT	WHITE	175	1/2"	5.6	1/2"	VICTAULIC	V3802	CONCEALED	61
⦿	PENDENT	WHITE	175	3/4"	11.2	3/4"	VICTAULIC	V1106	CONCEALED	91
⃠	UPRIGHT	BRASS	200	1/2"	5.6	1/2"	VICTAULIC	V2704	N/A	14
◐	UPRIGHT (ON SPRIG)	BRASS	200	1/2"	5.6	1/2"	VICTAULIC	V2704	N/A	0
⊗	UPRIGHT	BRASS	200	3/4"	8.0	3/4"	VICTAULIC	V3402	N/A	0
◀	SIDEWALL	WHITE	200	1/2"	5.6	1/2"	VICTAULIC	V2710	FLUSH	1
⊛	DRY PENDENT	CHROME	200	1/2"	5.6	1/2"	VICTAULIC	V3614	EXTENDED	0
◁	DRY SIDEWALL	CHROME	200	3/4"	8.0	3/4"	TYCO	TY4355	STANDARD	0

TOTAL SPRINKLERS THIS PROJECT 1292 — TOTAL SPRINKLERS THIS DRAWING 167

JOB #:	C05-25
DATE:	07-25-2025
SCALE:	As Noted
DRAWN BY:	KM
CHK. BY:	LDT

PHOENIX FIRE PROTECTION, INC.
P.O. BOX 2881
2863 LEE AVENUE
SANFORD, N.C. 27332
PHONE: (919) 774-3042 FAX: (919) 774-1492

Area 500/600 - First Floor Piping Plan

Flatwoods Middle School
3544 US 401 South
Lillington, North Carolina

Larry Taylor
LARRY DEAN TAYLOR
NICET LEVEL IV, CERT. NO. 112126
11/11/2025
DATE

SHEET No.
FP-7
OF 13

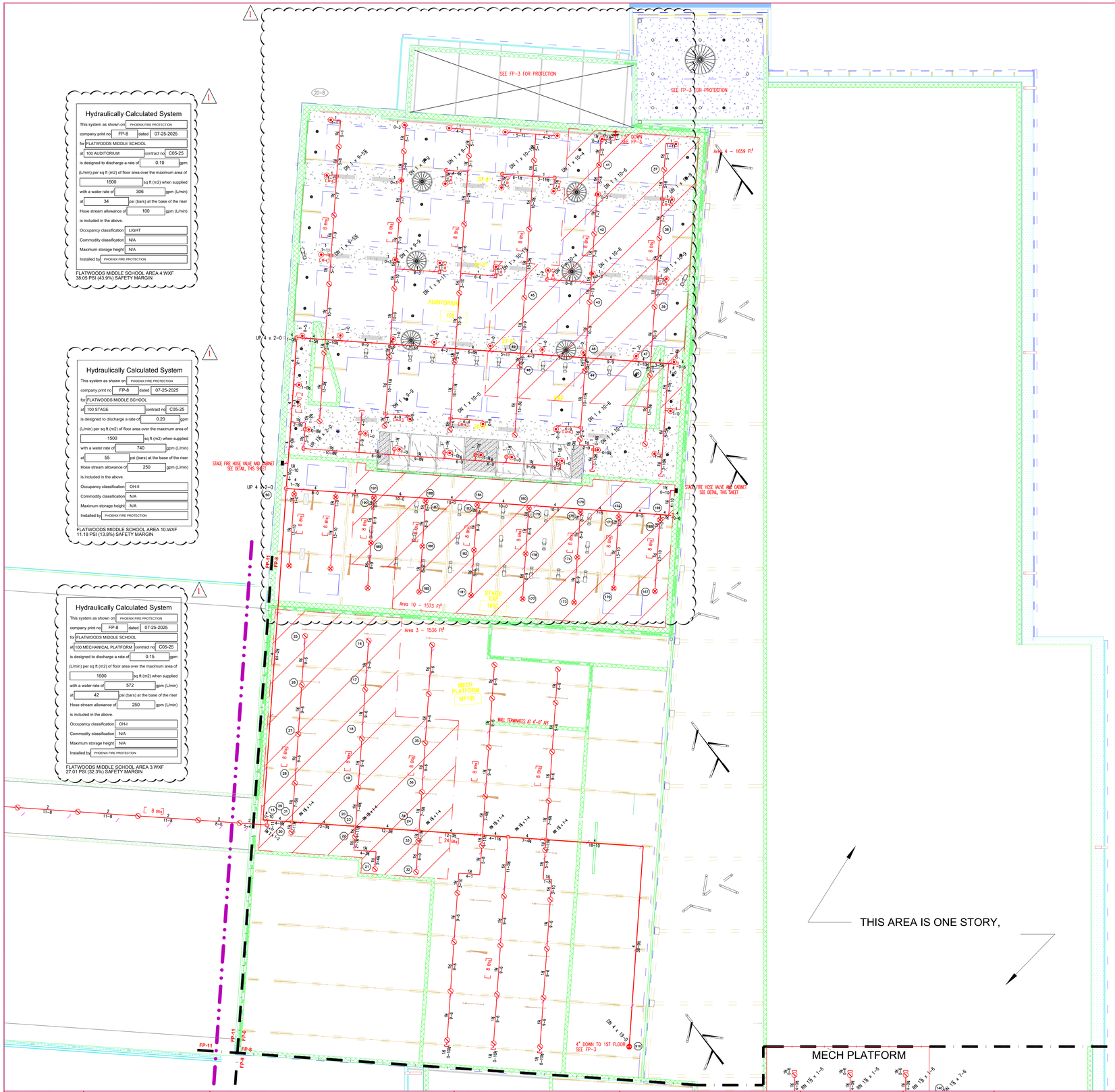

Hydraulically Calculated System

This system as shown on	PHOENIX FIRE PROTECTION
company print no	FP-8 dated 07-25-2025
for	FLATWOODS MIDDLE SCHOOL
at	100 AUDITORIUM contract no C05-25
is designed to discharge a rate of	0.10 gpm
(L/min) per sq ft (m2) of floor area over the maximum area of	
	1500 sq ft (m2) when supplied
with a water rate of	306 gpm (L/min)
at	34 psi (bars) at the base of the riser
Hose stream allowance of	100 gpm (L/min)
is included in the above.	
Occupancy classification	LIGHT
Commodity classification	N/A
Maximum storage height	N/A
Installed by	PHOENIX FIRE PROTECTION

FLATWOODS MIDDLE SCHOOL AREA 4.WXF
38.05 PSI (43.9%) SAFETY MARGIN

Hydraulically Calculated System

This system as shown on	PHOENIX FIRE PROTECTION
company print no	FP-8 dated 07-25-2025
for	FLATWOODS MIDDLE SCHOOL
at	100 STAGE contract no C05-25
is designed to discharge a rate of	0.20 gpm
(L/min) per sq ft (m2) of floor area over the maximum area of	
	1500 sq ft (m2) when supplied
with a water rate of	740 gpm (L/min)
at	55 psi (bars) at the base of the riser
Hose stream allowance of	250 gpm (L/min)
is included in the above.	
Occupancy classification	OH-II
Commodity classification	N/A
Maximum storage height	N/A
Installed by	PHOENIX FIRE PROTECTION

FLATWOODS MIDDLE SCHOOL AREA 10.WXF
11.18 PSI (13.8%) SAFETY MARGIN

Hydraulically Calculated System

This system as shown on	PHOENIX FIRE PROTECTION
company print no	FP-8 dated 07-25-2025
for	FLATWOODS MIDDLE SCHOOL
at	100 MECHANICAL PLATFORM contract no C05-25
is designed to discharge a rate of	0.15 gpm
(L/min) per sq ft (m2) of floor area over the maximum area of	
	1500 sq ft (m2) when supplied
with a water rate of	572 gpm (L/min)
at	42 psi (bars) at the base of the riser
Hose stream allowance of	250 gpm (L/min)
is included in the above.	
Occupancy classification	OH-I
Commodity classification	N/A
Maximum storage height	N/A
Installed by	PHOENIX FIRE PROTECTION

FLATWOODS MIDDLE SCHOOL AREA 3.WXF
27.01 PSI (32.3%) SAFETY MARGIN

THIS AREA IS ONE STORY,

MECH PLATFORM

Top Beam Clamp Hanger

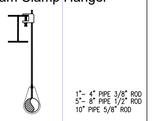

TYPICAL #01 HANGER
NO SCALE

1 -- 1" A.I.R.
1 -- 1" Swivel Ring (PHD #141)
1 -- 1" Top Beam Clamp (PHD #350)

Hilti Drop In Hanger

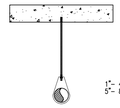

TYPICAL #05 HANGER
NO SCALE

1 -- 1" A.I.R.
1 -- 1" Swivel Ring (PHD #141)
1 -- 1" Hilti HDI-1" Drop-In Anchor

Top Beam Clamp Trapeze Hanger

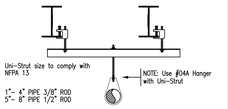

TYPICAL #17B HANGER
NO SCALE

1 -- 1 x 1"x 12 ga. x Length Uni-Strut (A + 8")
2 -- 1" x 8" A1 Stud for Attachment to Unistrut
2 -- 1" Top Beam Clamp (PHD #350)
6 -- 1" Nuts
6 -- 1" Fender Washers

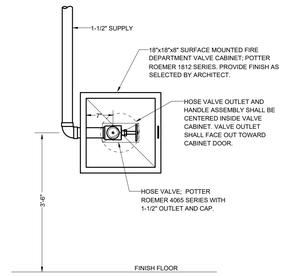

STAGE FIRE HOSE VALVE AND CABINET
NO SCALE

GENERAL NOTES

A. FIRE PROTECTION SCOPE BEGINS AT 1'-0" AFF. UNDERGROUND IS BY OTHERS.

B. ALL 1.25" AND SMALLER PIPING TO BE BLACK, SCHEDULE 40 THREADED.

C. ALL 1.5" AND LARGER BRANCHLINES TO BE BLACK, SCHEDULE 10 GROOVED OR BLACK, SCHEDULE 40 THREADED. ALL MAINS TO BE BLACK, SCHEDULE 10 GROOVED.

D. ALL DRY PIPING, BALL DRIP DISCHARGES, AND DRAIN/TEST DISCHARGES TO BE HOT-DIPPED GALVANIZED.

E. ALL PIPING SHALL BE MANUFACTURED IN THE US.

F. ALL PENDENT SPRINKLERS IN CEILING GRID TO BE ON 36" VICTAULIC AH2 FLEX DROPS.

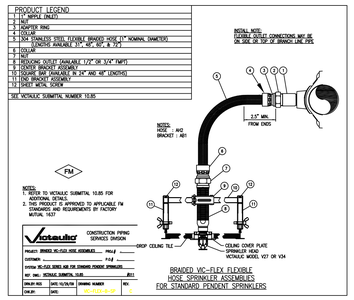

KEY PLAN

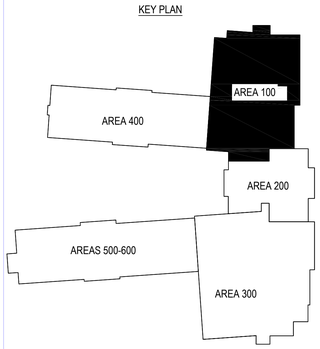

AREA 100 - SECOND FLOOR PIPING PLAN
SCALE: 1/8" = 1'-0"

SCALE 1/8"=1'-0"

PLAN NORTH

N.C. LICENSE NO. PFS-13628

This fire sprinkler planning and design drawing has been prepared by Phoenix Fire Protection, Inc. as a licensed fire sprinkler contractor under Article 2 of Chapter 87 of the General Statutes for Phoenix Fire Protection, Inc.'s exclusive use pursuant to G.S. §89C-25(8), and Phoenix Fire Protection, Inc. must perform any and all installation work and other work performed in reliance on this drawing pursuant to G.S. §55B-15(a)(2). Installation work or any other work performed by any other person or entity in reliance on this drawing or any copy thereof is strictly prohibited. © 2025 Phoenix Fire Protection, Inc.

SHEET INDEX

FP-1 - Site Plan / Cover Sheet
FP-2 - Details
FP-3 - Area 100 - First Floor Piping Plan
FP-4 - Area 200 - First Floor Piping Plan
FP-5 - Area 300 - First Floor Piping Plan
FP-6 - Area 400 - First Floor Piping Plan
FP-7 - Area 500/600 - First Floor Piping Plan
FP-8 - Area 100 - Second Floor Piping Plan
FP-9 - Area 200 - Second Floor Piping Plan
FP-10 - Area 300 - Second Floor Piping Plan
FP-11 - Area 400 - Second Floor Piping Plan
FP-12 - Area 500/600 - Second Floor Piping Plan
FP-13 - Area 500/600 - Mech Platform Piping Plan

APPROVING AGENCIES

APPROVING AUTHORITY:	HARNETT COUNTY
ADDRESS:	P.O. BOX 65
CITY & STATE:	LILLINGTON, NC 27546
PHONE NO.:	(910) 893-7525
FAX NO.:	(910) 893-2793
WEBSITE:	www.harnett.org

ADDTIONAL NOTES

SEAL

REVISIONS

#	DATE	DESCRIPTION	BY
1	11/11/25	REVISED PER ENGINEER / ARCHITECT REVIEW	KM

SPRINKLER SUMMARY

SYM	TYPE	FINISH	TEMP	ORIF.	"K"	NPT	MANUF.	SIN#	ESCUTCHEON	QTY.
	PENDENT	WHITE	175	1/2"	5.6	1/2"	VICTAULIC	V3802	CONCEALED	44
	PENDENT	WHITE	175	3/4"	11.2	3/4"	VICTAULIC	V1106	CONCEALED	0
	UPRIGHT	BRASS	200	1/2"	5.6	1/2"	VICTAULIC	V2704	N/A	69
	UPRIGHT (ON SPRIG)	BRASS	200	1/2"	5.6	1/2"	VICTAULIC	V2704	N/A	0
	UPRIGHT	BRASS	200	3/4"	8.0	3/4"	VICTAULIC	V3402	N/A	23
	SIDEWALL	WHITE	200	1/2"	5.6	1/2"	VICTAULIC	V2710	FLUSH	0
	DRY PENDENT	CHROME	200	1/2"	5.6	1/2"	VICTAULIC	V3614	EXTENDED	0
	DRY SIDEWALL	CHROME	200	3/4"	8.0	3/4"	TYCO	TY4355	STANDARD	0

TOTAL SPRINKLERS THIS PROJECT 1292 — TOTAL SPRINKLERS THIS DRAWING 136

JOB #: C05-25
DATE: 07-25-2025
SCALE: As Noted
DRAWN BY: KM
CHK. BY: LDT

PHOENIX FIRE PROTECTION, INC.
P.O. BOX 2881
2863 LEE AVENUE
SANFORD, N.C. 27332
PHONE: (919) 774-3042 FAX: (919) 774-1492

Area 100 - Second Floor Piping Plan

Flatwoods Middle School
3544 US 401 South
Lillington, North Carolina

Larry Taylor 11/11/2025
LARRY DEAN TAYLOR DATE
NICET LEVEL IV, CERT. NO. 112126

SHEET No. FP-8 OF 13

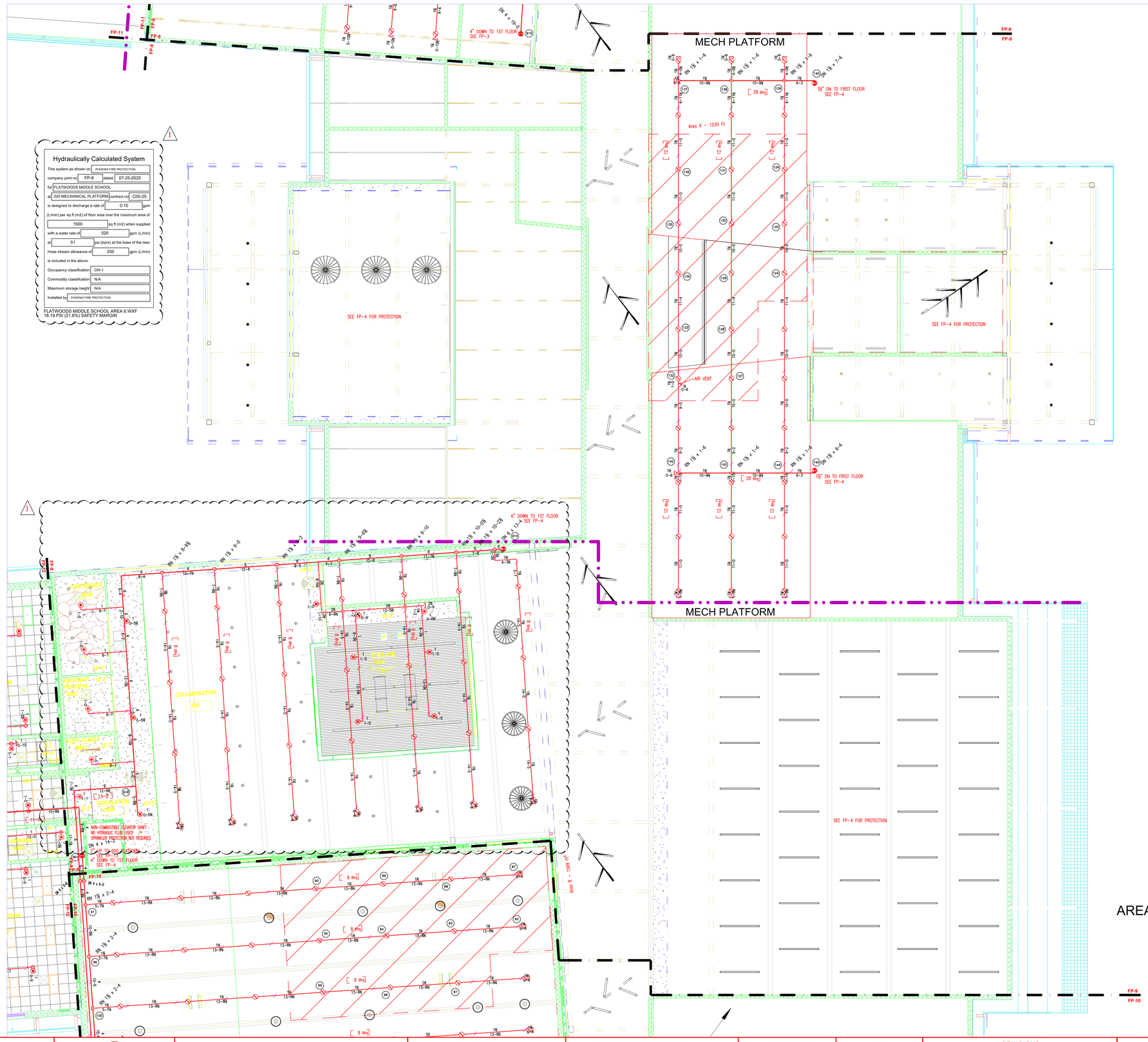

Hydraulically Calculated System

This system as shown on	PHOENIX FIRE PROTECTION
company print no	FP-9 dated 07-25-2025
for	FLATWOODS MIDDLE SCHOOL
at	200 MECHANICAL PLATFORM contract no C05-25
is designed to discharge a rate of	0.15 gpm
(L/min) per sq ft (m2) of floor area over the maximum area of	
	1500 sq ft (m2) when supplied
with a water rate of	520 gpm (L/min)
at	51 psi (bars) at the base of the riser
Hose stream allowance of	250 gpm (L/min)
is included in the above.	
Occupancy classification	OH-1
Commodity classification	N/A
Maximum storage height	N/A
Installed by	PHOENIX FIRE PROTECTION

FLATWOODS MIDDLE SCHOOL AREA 6.WXF
18.19 PSI (21.6%) SAFETY MARGIN

Top Beam Clamp Hanger

1"– 4" PIPE 3/8" ROD
5"– 8" PIPE 1/2" ROD
10" PIPE 5/8" ROD

TYPICAL #01 HANGER
NO SCALE

1 -- 7" A.T.R.
1 -- 7" Swivel Ring (PHD #141)
1 -- 7" Top Beam Clamp (PHD #350)

Hilti Drop In Hanger

1"– 4" PIPE 3/8" ROD
5"– 8" PIPE 1/2" ROD

TYPICAL #05 HANGER
NO SCALE

1 -- 7" A.T.R.
1 -- 7" Swivel Ring (PHD #141)
1 -- 7" Hilti HDI-P Drop-In Anchor

Top Beam Clamp Trapeze Hanger

Uni-Strut size to comply with NFPA 13

NOTE: Use #04A Hanger with Uni-Strut

1"– 4" PIPE 3/8" ROD
5"– 8" PIPE 1/2" ROD

TYPICAL #17B HANGER
NO SCALE

1 -- 7 x 7"x 12 ga. x Length Uni-Strut (A + 6")
2 -- 7" x 8" AT Stud for Attachment to Unistrut
2 -- 7" Top Beam Clamp (PHD #350)
6 -- 7" Nuts
6 -- 7" Fender Washers

GENERAL NOTES

A. FIRE PROTECTION SCOPE BEGINS AT 1'-0" AFF. UNDERGROUND IS BY OTHERS.

B. ALL 1.25" AND SMALLER PIPING TO BE BLACK, SCHEDULE 40 THREADED.

C. ALL 1.5" AND LARGER BRANCHLINES TO BE BLACK, SCHEDULE 10 GROOVED OR BLACK, SCHEDULE 40 THREADED. ALL MAINS TO BE BLACK, SCHEDULE 10 GROOVED.

D. ALL DRY PIPING, BALL DRIP DISCHARGES, AND DRAIN/TEST DISCHARGES TO BE HOT-DIPPED GALVANIZED.

E. ALL PIPING SHALL BE MANUFACTURED IN THE US.

F. ALL PENDENT SPRINKLERS IN CEILING GRID TO BE ON 36" VICTAULIC AH2 FLEX DROPS.

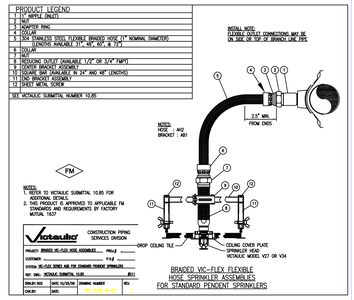

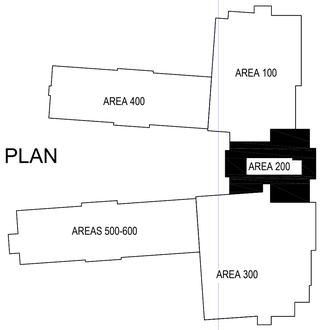

AREA 200 - SECOND FLOOR PIPING PLAN
SCALE: 1/8" = 1'-0"

SCALE 1/8"=1'-0"

PLAN NORTH

N.C. LICENSE NO. PFS-13628

This fire sprinkler planning and design drawing has been prepared by Phoenix Fire Protection, Inc. as a licensed fire sprinkler contractor under Article 2 of Chapter 87 of the General Statutes for Phoenix Fire Protection, Inc.'s exclusive use pursuant to G.S. §89C-25(8), and Phoenix Fire Protection, Inc. must perform any and all installation work and other work performed in reliance on this drawing pursuant to G.S. §55B-15(a)(2). Installation work or any other work performed by any other person or entity in reliance on this drawing or any copy thereof is strictly prohibited. © 2025 Phoenix Fire Protection, Inc.

SHEET INDEX

FP-1 - Site Plan / Cover Sheet
FP-2 - Details
FP-3 - Area 100 - First Floor Piping Plan
FP-4 - Area 200 - First Floor Piping Plan
FP-5 - Area 300 - First Floor Piping Plan
FP-6 - Area 400 - First Floor Piping Plan
FP-7 - Area 500/600 - First Floor Piping Plan
FP-8 - Area 100 - Second Floor Piping Plan
FP-9 - Area 200 - Second Floor Piping Plan
FP-10 - Area 300 - Second Floor Piping Plan
FP-11 - Area 400 - Second Floor Piping Plan
FP-12 - Area 500/600 - Second Floor Piping Plan
FP-13 - Area 500/600 - Mech Platform Piping Plan

APPROVING AGENCIES

APPROVING AUTHORITY:	HARNETT COUNTY
ADDRESS:	P.O. BOX 65
CITY & STATE:	LILLINGTON, NC 27546
PHONE NO.:	(910) 893-7525
FAX NO.:	(910) 893-2793
WEBSITE:	www.harnett.org

ADDTIONAL NOTES

SEAL

REVISIONS

#	DATE	DESCRIPTION	BY
1	11/11/25	REVISED PER ENGINEER / ARCHITECT REVIEW	KM

SPRINKLER SUMMARY

SYM	TYPE	FINISH	TEMP	ORIF.	"K"	NPT	MANUF.	SIN#	ESCUTCHEON	QTY.
	PENDENT	WHITE	175	1/2"	5.6	1/2"	VICTAULIC	V3802	CONCEALED	7
	PENDENT	WHITE	175	3/4"	11.2	3/4"	VICTAULIC	V1100	CONCEALED	8
	UPRIGHT	BRASS	200	1/2"	5.6	1/2"	VICTAULIC	V2704	N/A	61
	UPRIGHT (ON SPRIG)	BRASS	200	1/2"	5.6	1/2"	VICTAULIC	V2704	N/A	0
	UPRIGHT	BRASS	200	3/4"	8.0	3/4"	VICTAULIC	V3402	N/A	0
	SIDEWALL	WHITE	200	1/2"	5.6	1/2"	VICTAULIC	V2710	FLUSH	0
	DRY PENDENT	CHROME	200	1/2"	5.6	1/2"	VICTAULIC	V3614	EXTENDED	0
	DRY SIDEWALL	CHROME	200	3/4"	8.0	3/4"	TYCO	TY4355	STANDARD	0
	TOTAL SPRINKLERS THIS PROJECT					1292	TOTAL SPRINKLERS THIS DRAWING			76

JOB #: C05-25
DATE: 07-25-2025
SCALE: As Noted
DRAWN BY: KM
CHK. BY: LDT

PHOENIX FIRE PROTECTION, INC.
P.O. BOX 2881
2863 LEE AVENUE
SANFORD, N.C. 27332
PHONE: (919) 774-3042 FAX: (919) 774-1492

Area 200 - Second Floor Piping Plan

Flatwoods Middle School
3544 US 401 South
Lillington, North Carolina

Larry Taylor 11/11/2025
LARRY DEAN TAYLOR DATE
NICET LEVEL IV, CERT. NO. 112126

SHEET NO. FP-9 OF 13

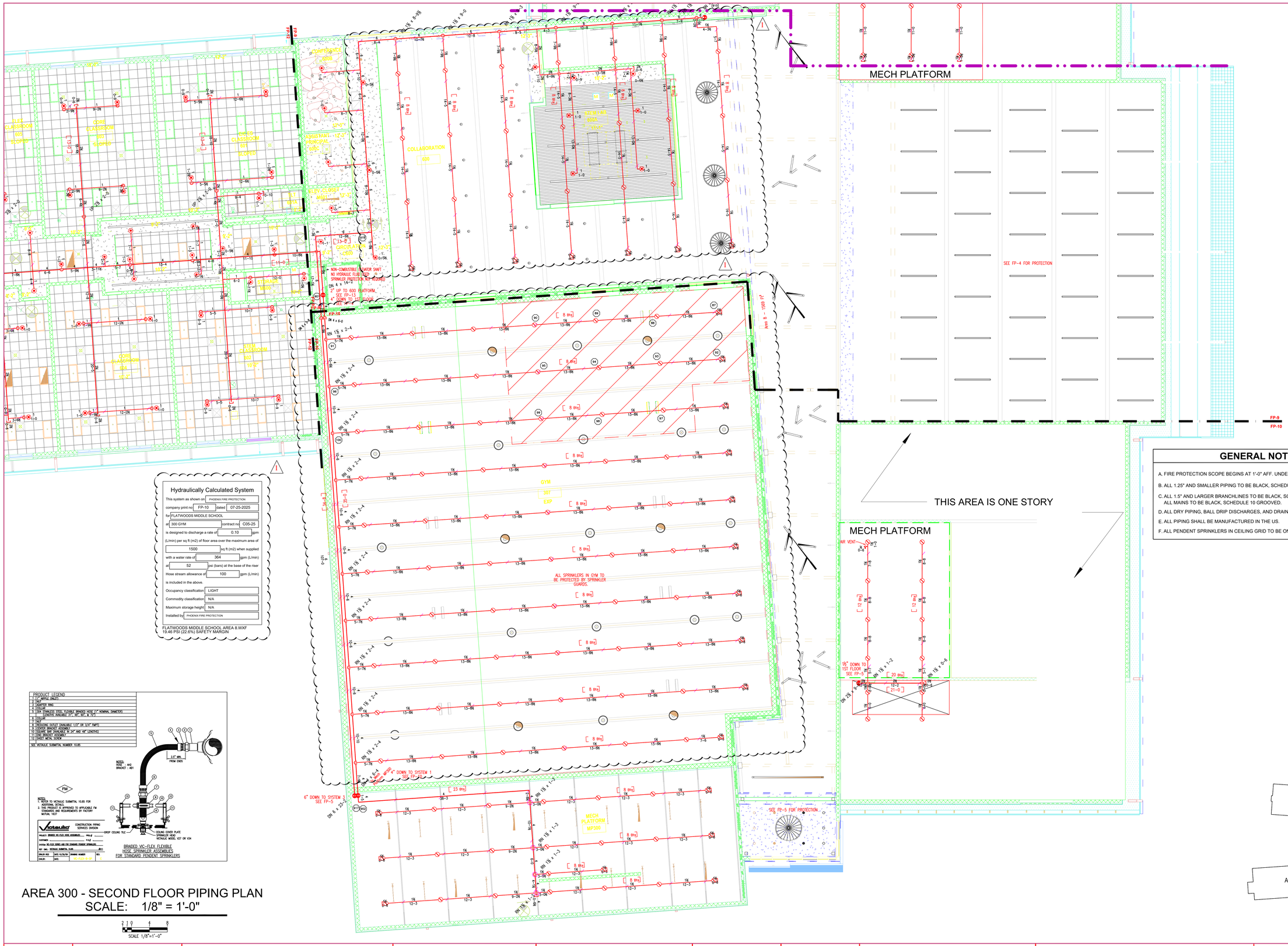

Top Beam Clamp Hanger

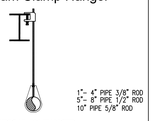

TYPICAL #01 HANGER
NO SCALE

1 -- 7" A.T.R.
1 -- 7" Swivel Ring (PHD #141)
1 -- 7" Top Beam Clamp (PHD #350)

Hilti Drop In Hanger

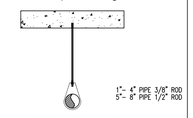

TYPICAL #05 HANGER
NO SCALE

1 -- 7" A.T.R.
1 -- 7" Swivel Ring (PHD #141)
1 -- 7" Hilti HDI-P Drop-in Anchor

Top Beam Clamp Trapeze Hanger

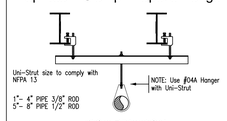

TYPICAL #17B HANGER
NO SCALE

1 -- ?"x ?"x 12 ga. x Length Uni-Strut (A + 6")
2 -- ?" x 8" All Stud for Attachment to Unistrut
2 -- ?" Top Beam Clamp (PHD #350)
6 -- ?" Nuts
6 -- ?" Fender Washers

GENERAL NOTES

A. FIRE PROTECTION SCOPE BEGINS AT 1'-0" AFF. UNDERGROUND IS BY OTHERS.

B. ALL 1.25" AND SMALLER PIPING TO BE BLACK, SCHEDULE 40 THREADED.

C. ALL 1.5" AND LARGER BRANCHLINES TO BE BLACK, SCHEDULE 10 GROOVED OR BLACK, SCHEDULE 40 THREADED. ALL MAINS TO BE BLACK, SCHEDULE 10 GROOVED.

D. ALL DRY PIPING, BALL DRIP DISCHARGES, AND DRAIN/TEST DISCHARGES TO BE HOT-DIPPED GALVANIZED.

E. ALL PIPING SHALL BE MANUFACTURED IN THE US.

F. ALL PENDENT SPRINKLERS IN CEILING GRID TO BE ON 36" VICTAULIC AH2 FLEX DROPS.

Hydraulically Calculated System

This system as shown on	PHOENIX FIRE PROTECTION		
company print no	FP-10	dated	07-25-2025
for	FLATWOODS MIDDLE SCHOOL		
at	300 GYM	contract no	C05-25
is designed to discharge a rate of	0.10	gpm	
(L/min) per sq ft (m2) of floor area over the maximum area of			
	1500	sq ft (m2) when supplied	
with a water rate of	364	gpm (L/min)	
at	52	psi (bars) at the base of the riser	
Hose stream allowance of	100	gpm (L/min)	
is included in the above.			
Occupancy classification	LIGHT		
Commodity classification	N/A		
Maximum storage height	N/A		
Installed by	PHOENIX FIRE PROTECTION		

FLATWOODS MIDDLE SCHOOL AREA 8.WXF
19.46 PSI (22.6%) SAFETY MARGIN

TYPICAL AIR VENT DETAIL
NO SCALE

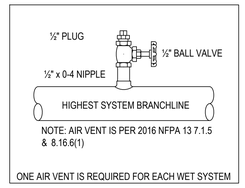

PRODUCT LEGEND

1	111 NIPPLE (INLET)
2	GASKET
3	ADAPTER RING
4	COUPLING
5	304 STAINLESS STEEL FLEXIBLE BRAIDED HOSE (1" NOMINAL DIAMETER) LENGTHS AVAILABLE 21", 42", 60" & 72"
6	COUPLING
7	GASKET
8	RESTRAINING OUTLET (AVAILABLE 1/2" OR 3/4" FNPT)
9	COVER BRACKET ASSEMBLY
10	SQUARE BAR (AVAILABLE IN 24" AND 48" LENGTHS)
11	END BRACKET ASSEMBLY
12	SPECT METAL SCREW

SEE VICTAULIC SUBMITTAL NUMBER 10.85

AREA 300 - SECOND FLOOR PIPING PLAN
SCALE: 1/8" = 1'-0"

2 1 0 4 8
SCALE 1/8"=1'-0"

KEY PLAN

PLAN NORTH

N.C. LICENSE NO. PFS-13628

This fire sprinkler planning and design drawing has been prepared by Phoenix Fire Protection, Inc. as a licensed fire sprinkler contractor under Article 2 of Chapter 87 of the General Statutes for Phoenix Fire Protection, Inc.'s exclusive use pursuant to G.S. §89C-25(8), and Phoenix Fire Protection, Inc. must perform any and all installation work and other work performed in reliance on this drawing pursuant to G.S. §55B-15(a)(2). Installation work or any other work performed by any other person or entity in reliance on this drawing or any copy thereof is strictly prohibited. © 2025 Phoenix Fire Protection, Inc.

SHEET INDEX

FP-1 - Site Plan / Cover Sheet
FP-2 - Details
FP-3 - Area 100 - First Floor Piping Plan
FP-4 - Area 200 - First Floor Piping Plan
FP-5 - Area 300 - First Floor Piping Plan
FP-6 - Area 400 - First Floor Piping Plan
FP-7 - Area 500/600 - First Floor Piping Plan
FP-8 - Area 100 - Second Floor Piping Plan
FP-9 - Area 200 - Second Floor Piping Plan
FP-10 - Area 300 - Second Floor Piping Plan
FP-11 - Area 400 - Second Floor Piping Plan
FP-12 - Area 500/600 - Second Floor Piping Plan
FP-13 - Area 500/600 - Mech Platform Piping Plan

APPROVING AGENCIES

APPROVING AUTHORITY:	HARNETT COUNTY
ADDRESS:	P.O. BOX 65
CITY & STATE:	LILLINGTON, NC 27546
PHONE NO.:	(910) 893-7525
FAX NO.:	(910) 893-2793
WEBSITE:	www.harnett.org

ADDTIONAL NOTES

SEAL

REVISIONS

#	DATE	DESCRIPTION	BY
1	11/11/25	REVISED PER ENGINEER / ARCHITECT REVIEW	KM

SPRINKLER SUMMARY

SYM	TYPE	FINISH	TEMP	ORIF.	"K"	NPT	MANUF.	SIN#	ESCUTCHEON	QTY.
	PENDENT	WHITE	175	1/2"	5.6	1/2"	VICTAULIC	V3802	CONCEALED	0
	PENDENT	WHITE	175	3/4"	11.2	3/4"	VICTAULIC	V1106	CONCEALED	0
	UPRIGHT	BRASS	200	1/2"	5.6	1/2"	VICTAULIC	V2704	N/A	105
	UPRIGHT (ON SIPRIG)	BRASS	200	1/2"	5.6	1/2"	VICTAULIC	V2704	N/A	0
	UPRIGHT	BRASS	200	3/4"	8.0	3/4"	VICTAULIC	V3402	N/A	0
	SIDEWALL	WHITE	200	1/2"	5.6	1/2"	VICTAULIC	V2710	FLUSH	0
	DRY PENDENT	CHROME	200	1/2"	5.6	1/2"	VICTAULIC	V3614	EXTENDED	0
	DRY SIDEWALL	CHROME	200	3/4"	8.0	3/4"	TYCO	TY4355	STANDARD	0

TOTAL SPRINKLERS THIS PROJECT 1292 TOTAL SPRINKLERS THIS DRAWING 105

JOB #: C05-25
DATE: 07-25-2025
SCALE: As Noted
DRAWN BY: KM
CHK. BY: LDT

PHOENIX FIRE PROTECTION, INC.
P.O. BOX 2881
2863 LEE AVENUE
SANFORD, N.C. 27332
PHONE: (919) 774-3042 FAX: (919) 774-1492

Area 300 - Second Floor Piping Plan

Flatwoods Middle School
3544 US 401 South
Lillington, North Carolina

Larry Taylor 11/11/2025
LARRY DEAN TAYLOR DATE
NICET LEVEL IV, CERT. NO. 112126

SHEET No. FP-10 OF 13

GENERAL NOTES

A. FIRE PROTECTION SCOPE BEGINS AT 1'-0" AFF. UNDERGROUND IS BY OTHERS.

B. ALL 1.25" AND SMALLER PIPING TO BE BLACK, SCHEDULE 40 THREADED.

C. ALL 1.5" AND LARGER BRANCHLINES TO BE BLACK, SCHEDULE 10 GROOVED OR BLACK, SCHEDULE 40 THREADED. ALL MAINS TO BE BLACK, SCHEDULE 10 GROOVED.

D. ALL DRY PIPING, BALL DRIP DISCHARGES, AND DRAIN/TEST DISCHARGES TO BE HOT-DIPPED GALVANIZED.

E. ALL PIPING SHALL BE MANUFACTURED IN THE US.

F. ALL PENDENT SPRINKLERS IN CEILING GRID TO BE ON 36" VICTAULIC AH2 FLEX DROPS.

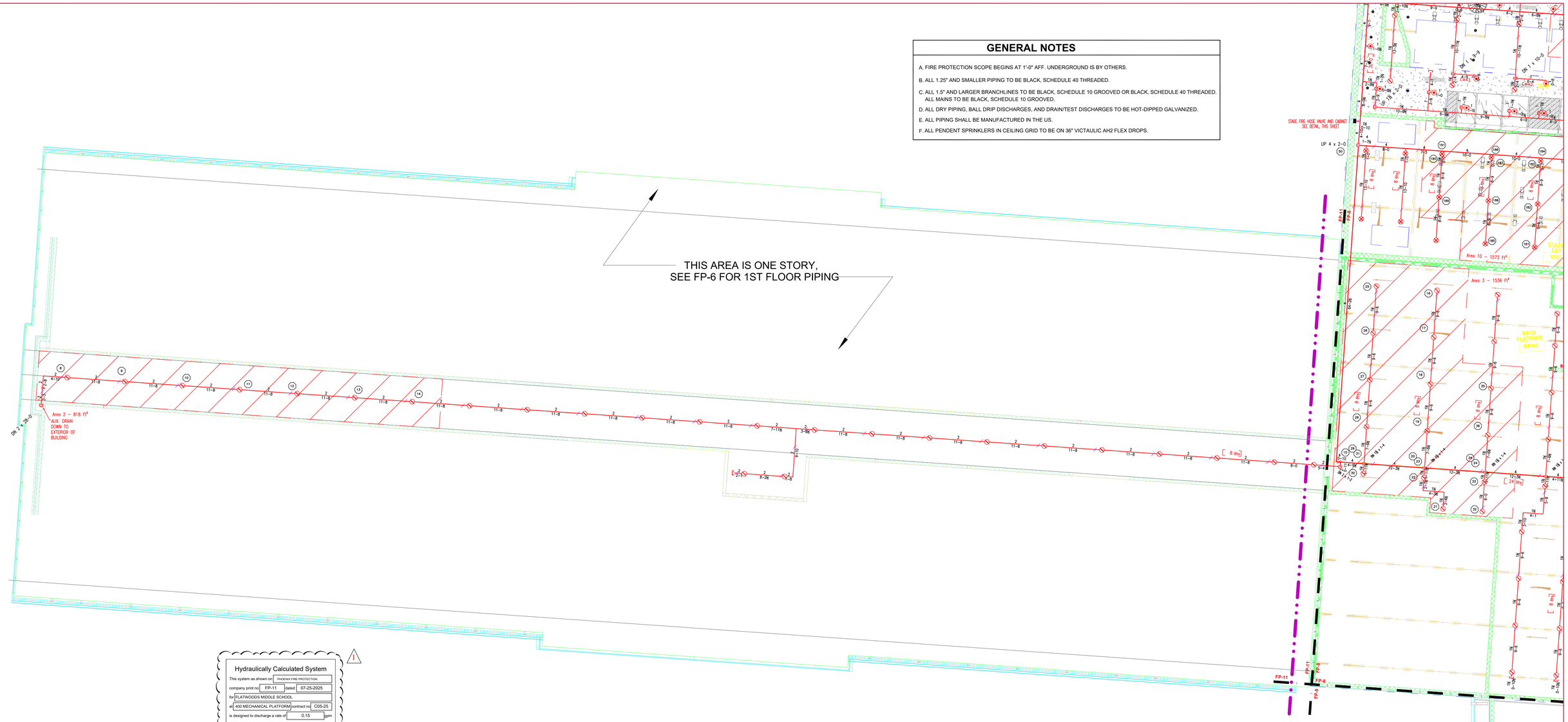

Hydraulically Calculated System

This system as shown on: PHOENIX FIRE PROTECTION
company print no: FP-11 dated: 07-25-2025
for: FLATWOODS MIDDLE SCHOOL
at: 400 MECHANICAL PLATFORM contract no: C05-25
is designed to discharge a rate of: 0.15 gpm (L/min) per sq ft (m2) of floor area over the maximum area of: 7_SPRINKLERS sq ft (m2) when supplied
with a water rate of: 381 gpm (L/min)
at: 53 psi (bars) at the base of the riser
Hose stream allowance of: 250 gpm (L/min)
is included in the above.
Occupancy classification: OH-I
Commodity classification: N/A
Maximum storage height: N/A
Installed by: PHOENIX FIRE PROTECTION

FLATWOODS MIDDLE SCHOOL AREA 2.WXF
CALCULATION PER 2013 NFPA 13 11.2.3.4.2
18.55 PSI (21.6%) SAFETY MARGIN

KEY PLAN

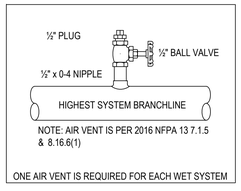

TYPICAL AIR VENT DETAIL
NO SCALE

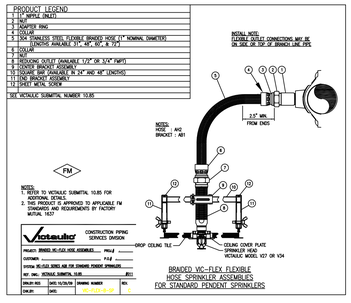

AREA 400 - SECOND FLOOR PIPING PLAN
SCALE: 1/8" = 1'-0"

2 1 0 4 8
SCALE 1/8"=1'-0"

Top Beam Clamp Hanger

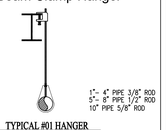

TYPICAL #01 HANGER
NO SCALE

1 -- 3" A.T.R.
1 -- 3" Swivel Ring (PHD #141)
1 -- 3" Top Beam Clamp (PHD #350)

Hilti Drop In Hanger

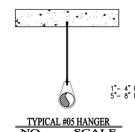

TYPICAL #05 HANGER
NO SCALE

1 -- 3" A.T.R.
1 -- 3" Swivel Ring (PHD #141)
1 -- 3" HILTI HDI-P Drop-In Anchor

Top Beam Clamp Trapeze Hanger

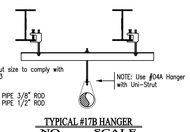

TYPICAL #17B HANGER
NO SCALE

1 -- 3 x 3"x 12 ga. x Length Uni-Strut (A + 6")
2 -- 3" x 6" A7 Stud for Attachment to Unistrut
2 -- 3" Top Beam Clamp (PHD #350)
6 -- 3" Nuts
6 -- 3" Fender Washers

PLAN NORTH

N.C. LICENSE NO. PFS-13628

This fire sprinkler planning and design drawing has been prepared by Phoenix Fire Protection, Inc. as a licensed fire sprinkler contractor under Article 2 of Chapter 87 of the General Statutes for Phoenix Fire Protection, Inc.'s exclusive use pursuant to G.S. §89C-25(8), and Phoenix Fire Protection, Inc. must perform any and all installation work and other work performed in reliance on this drawing pursuant to G.S. §55B-15(a)(2). Installation work or any other work performed by any other person or entity in reliance on this drawing or any copy thereof is strictly prohibited. © 2025 Phoenix Fire Protection, Inc.

SHEET INDEX

FP-1 - Site Plan / Cover Sheet
FP-2 - Details
FP-3 - Area 100 - First Floor Piping Plan
FP-4 - Area 200 - First Floor Piping Plan
FP-5 - Area 300 - First Floor Piping Plan
FP-6 - Area 400 - First Floor Piping Plan
FP-7 - Area 500/600 - First Floor Piping Plan
FP-8 - Area 100 - Second Floor Piping Plan
FP-9 - Area 200 - Second Floor Piping Plan
FP-10 - Area 300 - Second Floor Piping Plan
FP-11 - Area 400 - Second Floor Piping Plan
FP-12 - Area 500/600 - Second Floor Piping Plan
FP-13 - Area 500/600 - Mech Platform Piping Plan

APPROVING AGENCIES

APPROVING AUTHORITY:	HARNETT COUNTY
ADDRESS:	P.O. BOX 65
CITY & STATE:	LILLINGTON, NC 27546
PHONE NO.:	(910) 893-7525
FAX NO.:	(910) 893-2793
WEBSITE:	www.harnett.org

ADDTIONAL NOTES

SEAL

REVISIONS

#	DATE	DESCRIPTION	BY
1	11/11/25	REVISED PER ENGINEER / ARCHITECT REVIEW	KM

SPRINKLER SUMMARY

SYM	TYPE	FINISH	TEMP	ORIF.	"K"	NPT	MANUF.	Sin#	ESCUTCHEON	QTY.
	PENDENT	WHITE	175	1/2"	5.6	1/2"	VICTAULIC	V3802	CONCEALED	0
	PENDENT	WHITE	175	3/4"	11.2	3/4"	VICTAULIC	V1106	CONCEALED	0
	UPRIGHT	BRASS	200	1/2"	5.6	1/2"	VICTAULIC	V2704	N/A	25
	UPRIGHT (ON SPRIG)	BRASS	200	1/2"	5.6	1/2"	VICTAULIC	V2704	N/A	0
	UPRIGHT	BRASS	200	3/4"	8.0	3/4"	VICTAULIC	V3402	N/A	0
	SIDEWALL	WHITE	200	1/2"	5.6	1/2"	VICTAULIC	V2710	FLUSH	0
	DRY PENDENT	CHROME	200	1/2"	5.6	1/2"	VICTAULIC	V3614	EXTENDED	0
	DRY SIDEWALL	CHROME	200	3/4"	8.0	3/4"	TYCO	TY4355	STANDARD	0

TOTAL SPRINKLERS THIS PROJECT 1292 TOTAL SPRINKLERS THIS DRAWING 25

JOB #: C05-25
DATE: 07-25-2025
SCALE: As Noted
DRAWN BY: KM
CHK. BY: LDT

PHOENIX FIRE PROTECTION, INC.
P.O. BOX 2881
2863 LEE AVENUE
SANFORD, N.C. 27332
PHONE: (919) 774-3042 FAX: (919) 774-1492

Area 400 - Second Floor Piping Plan

Flatwoods Middle School
3544 US 401 South
Lillington, North Carolina

Larry Taylor 11/11/2025
LARRY DEAN TAYLOR DATE
NICET LEVEL IV, CERT. NO. 112126

SHEET No.
FP-11
OF 13

Top Beam Clamp Hanger

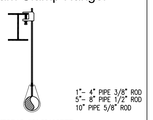

TYPICAL #01 HANGER
NO SCALE

1 -- 7" A.T.R.
1 -- 7" Swivel Ring (PHD #141)
1 -- 7" Top Beam Clamp (PHD #350)

Hilti Drop In Hanger

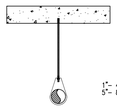

TYPICAL #05 HANGER
NO SCALE

1 -- 7" A.T.R.
1 -- 7" Swivel Ring (PHD #141)
1 -- 7" Hilti HD-F Drop-In Anchor

Top Beam Clamp Trapeze Hanger

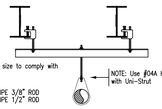

TYPICAL #17B HANGER
NO SCALE

1 -- 7 x 7"x 12 ga. x Length Uni-Strut (A + 6")
2 -- 7" x 8" A1 Stud for Attachment to Unistrut
2 -- 7" Top Beam Clamp (PHD #350)
6 -- 7" Nuts
6 -- 7" Fender Washers

Hydraulically Calculated System

This system as shown on	PHOENIX FIRE PROTECTION
company print no	FP-12 dated 07-25-2025
for	FLATWOODS MIDDLE SCHOOL
at	500/600 SECOND FLOOR contract no C05-25
is designed to discharge a rate of	0.10 gpm
(L/min) per sq ft (m2) of floor area over the maximum area of	
	1233 sq ft (m2) when supplied
with a water rate of	351 gpm (L/min)
at	54 psi (bars) at the base of the riser
Hose stream allowance of	100 gpm (L/min)
is included in the above.	
Occupancy classification	LIGHT
Commodity classification	N/A
Maximum storage height	N/A
Installed by	PHOENIX FIRE PROTECTION

FLATWOODS MIDDLE SCHOOL AREA 5.WXF
CALCULATION INCLUDES 35.3% AREA REDUCTION PER NFPA 13 11.2.3.2.3.1_17.55 PSI (20.4%) SAFETY MARGIN

GENERAL NOTES

A. FIRE PROTECTION SCOPE BEGINS AT 1'-0" AFF. UNDERGROUND IS BY OTHERS.

B. ALL 1.25" AND SMALLER PIPING TO BE BLACK, SCHEDULE 40 THREADED.

C. ALL 1.5" AND LARGER BRANCHLINES TO BE BLACK, SCHEDULE 10 GROOVED OR BLACK, SCHEDULE 40 THREADED. ALL MAINS TO BE BLACK, SCHEDULE 10 GROOVED.

D. ALL DRY PIPING, BALL DRIP DISCHARGES, AND DRAIN/TEST DISCHARGES TO BE HOT-DIPPED GALVANIZED.

E. ALL PIPING SHALL BE MANUFACTURED IN THE US.

F. ALL PENDENT SPRINKLERS IN CEILING GRID TO BE ON 36" VICTAULIC AH2 FLEX DROPS.

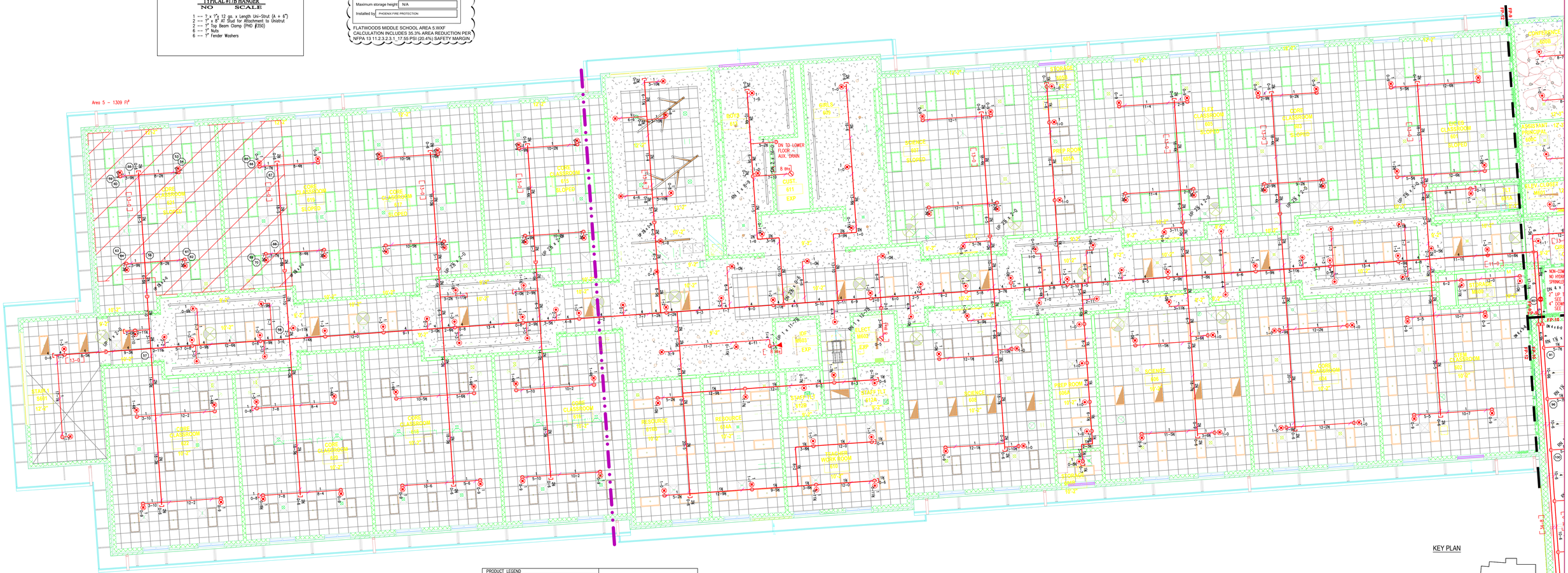

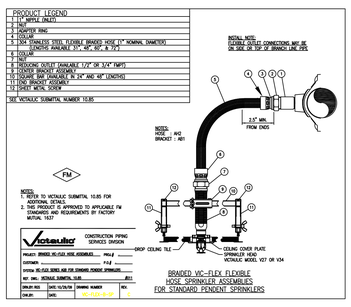

AREA 500/600 - SECOND FLOOR PIPING PLAN
SCALE: 1/8" = 1'-0"

2 1 0 4 8
SCALE 1/8"=1'-0"

KEY PLAN

PLAN NORTH

N.C. LICENSE NO. PFS-13628

This fire sprinkler planning and design drawing has been prepared by Phoenix Fire Protection, Inc. as a licensed fire sprinkler contractor under Article 2 of Chapter 87 of the General Statutes for Phoenix Fire Protection, Inc.'s exclusive use pursuant to G.S. §89C-25(8), and Phoenix Fire Protection, Inc. must perform any and all installation work and other work performed in reliance on this drawing pursuant to G.S. §55B-15(a)(2). Installation work or any other work performed by any other person or entity in reliance on this drawing or any copy thereof is strictly prohibited. © 2025 Phoenix Fire Protection, Inc.

SHEET INDEX

FP-1 - Site Plan / Cover Sheet
FP-2 - Details
FP-3 - Area 100 - First Floor Piping Plan
FP-4 - Area 200 - First Floor Piping Plan
FP-5 - Area 300 - First Floor Piping Plan
FP-6 - Area 400 - First Floor Piping Plan
FP-7 - Area 500/600 - First Floor Piping Plan
FP-8 - Area 100 - Second Floor Piping Plan
FP-9 - Area 200 - Second Floor Piping Plan
FP-10 - Area 300 - Second Floor Piping Plan
FP-11 - Area 400 - Second Floor Piping Plan
FP-12 - Area 500/600 - Second Floor Piping Plan
FP-13 - Area 500/600 - Mech Platform Piping Plan

APPROVING AGENCIES

APPROVING AUTHORITY:	HARNETT COUNTY
ADDRESS:	P.O. BOX 65
CITY & STATE:	LILLINGTON, NC 27546
PHONE NO.:	(910) 893-7525
FAX NO.:	(910) 893-2793
WEBSITE:	www.harnett.org

ADDTIONAL NOTES

SEAL

REVISIONS

#	DATE	DESCRIPTION	BY
1	11/11/25	REVISED PER ENGINEER / ARCHITECT REVIEW	KM

SPRINKLER SUMMARY

SYM	TYPE	FINISH	TEMP	ORIF.	"K"	NPT	MANUF.	SIN#	ESCUTCHEON	QTY.
	PENDENT	WHITE	175	1/2"	5.6	1/2"	VICTAULIC	V3802	CONCEALED	55
	PENDENT	WHITE	175	3/4"	11.2	3/4"	VICTAULIC	V1106	CONCEALED	304
	UPRIGHT	BRASS	200	1/2"	5.6	1/2"	VICTAULIC	V2704	N/A	2
	UPRIGHT (ON SPRIG)	BRASS	200	1/2"	5.6	1/2"	VICTAULIC	V2704	N/A	0
	UPRIGHT	BRASS	200	3/4"	8.0	3/4"	VICTAULIC	V3402	N/A	0
	SIDEWALL	WHITE	200	1/2"	5.6	1/2"	VICTAULIC	V2710	FLUSH	1
	DRY PENDENT	CHROME	200	1/2"	5.6	1/2"	VICTAULIC	V3614	EXTENDED	0
	DRY SIDEWALL	CHROME	200	3/4"	8.0	3/4"	TYCO	TY4355	STANDARD	0

TOTAL SPRINKLERS THIS PROJECT 1292 TOTAL SPRINKLERS THIS DRAWING 161

JOB #: C05-25
DATE: 07-25-2025
SCALE: As Noted
DRAWN BY: KM
CHK. BY: LDT

PHOENIX FIRE PROTECTION, INC.
P.O. BOX 2881
2863 LEE AVENUE
SANFORD, N.C. 27332
PHONE: (919) 774-3042 FAX: (919) 774-1492

Area 500/600 - Second Floor Piping Plan
Flatwoods Middle School
3544 US 401 South
Lillington, North Carolina

Larry Taylor 11/11/2025
LARRY DEAN TAYLOR DATE
NICET LEVEL IV, CERT. NO. 112126

SHEET NO. FP-12 OF 13

Top Beam Clamp Hanger

1"– 4" PIPE 3/8" ROD
5"– 8" PIPE 1/2" ROD
10" PIPE 5/8" ROD

TYPICAL #01 HANGER
NO SCALE

1 -- 7" A.T.R.
1 -- 7" Swivel Ring (PHD #141)
1 -- 7" Top Beam Clamp (PHD #350)

Hilti Drop In Hanger

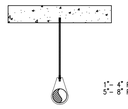

1"– 4" PIPE 3/8" ROD
5"– 8" PIPE 1/2" ROD

TYPICAL #05 HANGER
NO SCALE

1 -- 7" A.T.R.
1 -- 7" Swivel Ring (PHD #141)
1 -- 7" Hilti HDI–P Drop–In Anchor

Top Beam Clamp Trapeze Hanger

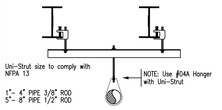

TYPICAL #17B HANGER
NO SCALE

1 -- 7' x 7's 12 ga. x Length Uni–Strut (A + 6")
2 -- 7" x 8" AT Stud for Attachment to Unistrut
2 -- 7" Top Beam Clamp (PHD #350)
6 -- 7" Nuts
6 -- 7" Fender Washers

PRODUCT LEGEND
1 - 1" NIPPLE (INLET)
2 - ELBOW
3 - ADAPTER RING
4 - COUPLER
5 - 304 STAINLESS STEEL FLEXIBLE BRAIDED HOSE (1" NOMINAL DIAMETER) (LENGTHS AVAILABLE 21", 42", 60" & 72")
6 - COUPLER
7 - ELBOW
8 - PRESSTONC OUTLET (AVAILABLE 1/2" OR 3/4" FNPT)
9 - COVER BRACKET ASSEMBLY
10 - SQUARE BAR (AVAILABLE IN 24" AND 48" LENGTHS)
11 - LONG BRACKET ASSEMBLY
12 - SHEET METAL SCREW
SEE VICTAULIC SUBMITTAL NUMBER 10.85

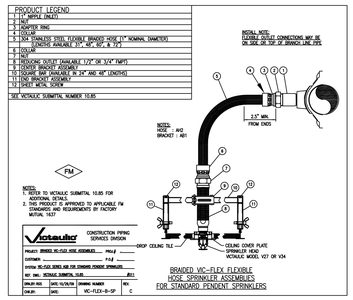

BRAIDED VIC–FLEX FLEXIBLE
HOSE SPRINKLER ASSEMBLIES
FOR STANDARD PENDENT SPRINKLERS

GENERAL NOTES

A. FIRE PROTECTION SCOPE BEGINS AT 1'-0" AFF. UNDERGROUND IS BY OTHERS.

B. ALL 1.25" AND SMALLER PIPING TO BE BLACK, SCHEDULE 40 THREADED.

C. ALL 1.5" AND LARGER BRANCHLINES TO BE BLACK, SCHEDULE 10 GROOVED OR BLACK, SCHEDULE 40 THREADED. ALL MAINS TO BE BLACK, SCHEDULE 10 GROOVED.

D. ALL DRY PIPING, BALL DRIP DISCHARGES, AND DRAIN/TEST DISCHARGES TO BE HOT-DIPPED GALVANIZED.

E. ALL PIPING SHALL BE MANUFACTURED IN THE US.

F. ALL PENDENT SPRINKLERS IN CEILING GRID TO BE ON 36" VICTAULIC AH2 FLEX DROPS.

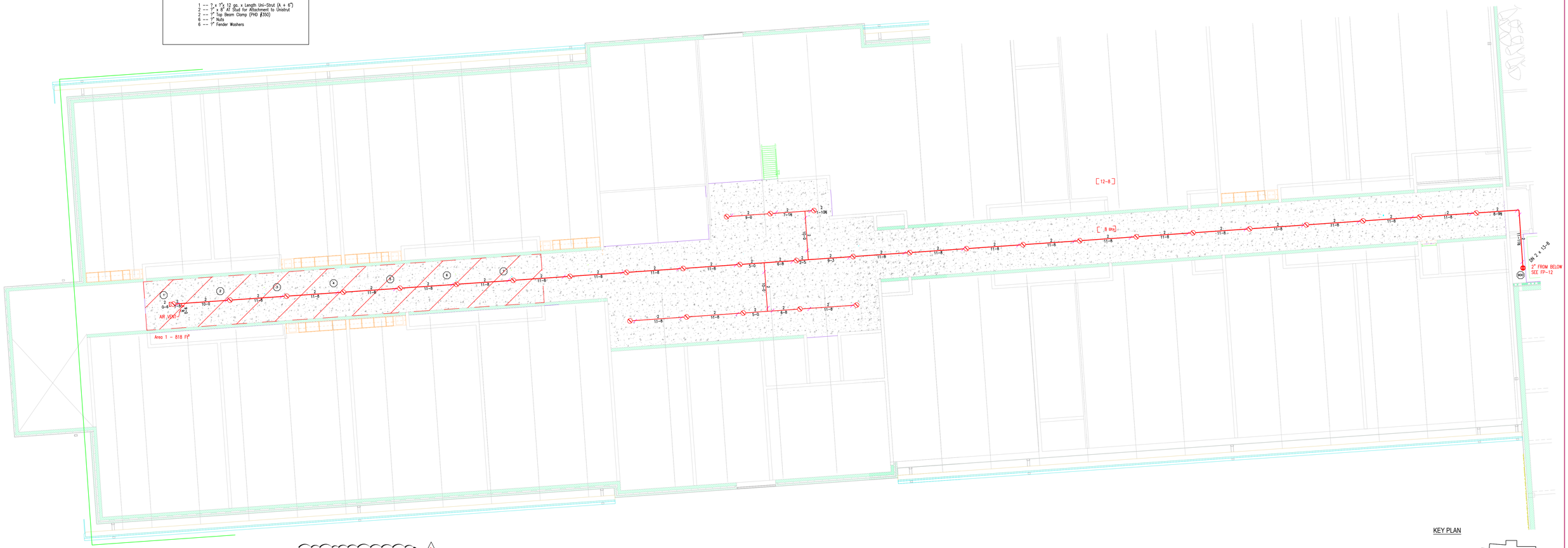

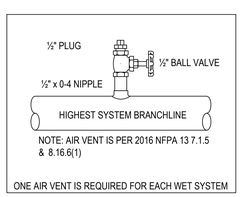

TYPICAL AIR VENT DETAIL
NO SCALE

Hydraulically Calculated System

This system as shown on PHOENIX FIRE PROTECTION
company print no FP-13 dated 07-25-2025
for FLATWOODS MIDDLE SCHOOL
at 600 MECHANICAL PLATFORM contract no C05-25
is designed to discharge a rate of 0.15 gpm
(L/min) per sq ft (m2) of floor area over the maximum area of
7_SPRINKLERS sq ft (m2) when supplied
with a water rate of 381 gpm (L/min)
at 63 psi (bars) at the base of the riser
Hose stream allowance of 250 gpm (L/min)
is included in the above.
Occupancy classification OH-I
Commodity classification N/A
Maximum storage height N/A
Installed by PHOENIX FIRE PROTECTION

FLATWOODS MIDDLE SCHOOL: AREA 1.WXF
CALCULATION PER NFPA 13 NFPA 13 11.2.3.4.2
8.64 PSI (10.1%) SAFETY MARGIN

AREA 500/600 - MECHANICAL PLATFORM PIPING PLAN
SCALE: 1/8" = 1'-0"

2 1 0 4 8
SCALE 1/8"=1'-0"

KEY PLAN

PLAN NORTH

N.C. LICENSE NO. PFS-13628

This fire sprinkler planning and design drawing has been prepared by Phoenix Fire Protection, Inc. as a licensed fire sprinkler contractor under Article 2 of Chapter 87 of the General Statutes for Phoenix Fire Protection, Inc.'s exclusive use pursuant to G.S. §89C-25(8), and Phoenix Fire Protection, Inc. must perform any and all installation work and other work performed in reliance on this drawing pursuant to G.S. §55B-15(a)(2). Installation work or any other work performed by any other person or entity in reliance on this drawing or any copy thereof is strictly prohibited. © 2025 Phoenix Fire Protection, Inc.

SHEET INDEX

FP-1 - Site Plan / Cover Sheet
FP-2 - Details
FP-3 - Area 100 - First Floor Piping Plan
FP-4 - Area 200 - First Floor Piping Plan
FP-5 - Area 300 - First Floor Piping Plan
FP-6 - Area 400 - First Floor Piping Plan
FP-7 - Area 500/600 - First Floor Piping Plan
FP-8 - Area 100 - Second Floor Piping Plan
FP-9 - Area 200 - Second Floor Piping Plan
FP-10 - Area 300 - Second Floor Piping Plan
FP-11 - Area 400 - Second Floor Piping Plan
FP-12 - Area 500/600 - Second Floor Piping Plan
FP-13 - Area 500/600 - Mech Platform Piping Plan

APPROVING AGENCIES

APPROVING AUTHORITY:	HARNETT COUNTY
ADDRESS:	P.O. BOX 65
CITY & STATE:	LILLINGTON, NC 27546
PHONE NO.:	(910) 893-7525
FAX NO.:	(910) 893-2793
WEBSITE:	www.harnett.org

ADDTIONAL NOTES

SEAL

REVISIONS

#	DATE	DESCRIPTION	BY
1	11/11/25	REVISED PER ENGINEER / ARCHITECT REVIEW	KM

SPRINKLER SUMMARY

SYM	TYPE	FINISH	TEMP	ORIF.	"K"	NPT	MANUF.	S/N#	ESCUTCHEON	QTY.
	PENDENT	WHITE	175	1/2"	5.6	1/2"	VICTAULIC	V3802	CONCEALED	0
	PENDENT	WHITE	175	3/4"	11.2	3/4"	VICTAULIC	V1106	CONCEALED	0
	UPRIGHT	BRASS	200	1/2"	5.6	1/2"	VICTAULIC	V2704	N/A	32
	UPRIGHT (ON SPRIG)	BRASS	200	1/2"	5.6	1/2"	VICTAULIC	V2704	N/A	0
	UPRIGHT	BRASS	200	3/4"	8.0	3/4"	VICTAULIC	V3402	N/A	0
	SIDEWALL	WHITE	200	1/2"	5.6	1/2"	VICTAULIC	V2710	FLUSH	0
	DRY PENDENT	CHROME	200	1/2"	5.6	1/2"	VICTAULIC	V3614	EXTENDED	0
	DRY SIDEWALL	CHROME	200	3/4"	8.0	3/4"	TYCO	TY4355	STANDARD	0

TOTAL SPRINKLERS THIS PROJECT 1292 TOTAL SPRINKLERS THIS DRAWING 32

JOB #: C05-25
DATE: 07-25-2025
SCALE: As Noted
DRAWN BY: KM
CHK. BY: LDT

PHOENIX FIRE PROTECTION, INC.
P.O. BOX 2881
2863 LEE AVENUE
SANFORD, N.C. 27332
PHONE: (919) 774-3042 FAX: (919) 774-1492

Area 500/600 - Mech Platform Piping Plan

Flatwoods Middle School
3544 US 401 South
Lillington, North Carolina

Larry Taylor 11/11/2025
LARRY DEAN TAYLOR DATE
NICET LEVEL IV, CERT. NO. 112126

SHEET No. FP-13 OF 13

PHOENIX FIRE PROTECTION

Attn: Troy Ganus Jr.
Metcon
Pembroke Operations

Date: November 11, 2025

Re: Wet Pipe Sprinkler Systems
Comments Addressed Ref. Optima # 24-0049R
HCS Flatwoods Middle School
3544 US 401 South
Lillington, NC

Product Data Review - General Note Comments:

Comment #1 and #2:

- Due to multiple revisions, all hydraulic calculations have been revised

Comment #3:

- Sprinkler piping data was provided in original submittal. See Item 10, pages 181-184, for information.

Shop Drawing Review - General Note Comments:

Comment#1:
See reference projects listed below:

- Northeast / Woodland Elementary School – Onslow County NC
  NFPA 13 Wet pipe system, over 1000 sprinklers installed.
- Rutherfordton-Spindale Middle School – Rutherford County NC
  NFPA 13 Wet pipe system, over 1100 sprinklers installed
- Food and Family Resource Center – City of Asheboro, NC
  NFPA 13 Wet pipe system, over 750 sprinklers installed

Other project design and installation experience include numerous industrial manufacturing facilities, institutional buildings, hospitals, and various government and military facilities including aircraft hangers for the U.S. Army Corps. Of Engineers, U.S. Navy, and U.S. Air Force.

Comment #2:

- Phoenix Fire Protection provides a one-year warranty on material and workmanship from completion date of project. Added the manufacturer's warranty to revised submittal data sheets as well.

Comment #3:

- The walls are multi-colored; therefore, a specific color or wall to match was not provided. The Architect did not provide a specific wall color to match. Standard available colors were sent via email on 09/04/2025 with no response. Based on a walk through at the sister school, all the cover plates were white. Phoenix Fire Protection will install white to match approved color at sister school.

Drawing Comments:

Sheet FP-3:

- Branch line has been relocated to run south and then pass through bulkhead
- The sprinkler shown outside of Lobby has been removed, it is not required.
- A 4-inch fire main has been added running down the East wall with the branch lines running between beams.

Sheet FP-4:

- Branch lines have been routed between beams.
- Sprinklers are not required under the covered porches / overhangs. The areas are non-combustible and not used for storage, pedestrian use only.
- The fire main in Dining 300 has been relocated.

Sheet FP-5:

- The fire main has been relocated to the south and ran above bulkhead. Area to be coordinated with other MEP; however, sprinkler piping main may not fit in space requested due to other piping and structural components.
- No sprinkler is required outside of entry; the North sprinkler has been removed also.

Sheet FP-8:

- Sprinkler line will be running down metal stud furr out as requested.
- Sprinklers cannot be placed between acoustic panels. The spacing would be too far apart and too far from deck above.
- Additional sprinklers to be added below ceiling bulkhead along north wall.

Sheet FP-9:

- Branch lines have been routed between beams.
- Revise piping layout to have a single line feed the Stem Lab.

Sheet FP-10:

- Branch lines have been routed between trusses.
- Will run main closet to wall as much as possible without going through truss. Area is currently being coordinated with other trades for that section.

Sincerely,

Larry D Taylor

Nicet Level IV_Cert. No. 112126

Submittal Data

For:

Flatwoods Middle School

3544 US 401 South

Lillington, NC 27546

PHOENIX FIRE PROTECTION, INC.
2863 LEE AVENUE
SANFORD, N.C. 27332
PHONE: (919) 774-3042
FAX: (919) 774-1492

PFP Project No.: C05-25
Date: Revised 11-11-2025

Table of Contents

1. HYDRAULIC CALCULATIONS
2. HYDRANT FLOW TEST
3. SPRINKLERS
4. FLEXIBLE SPRINKLER DROPS
5. UNIVERSAL RISER CHECK ASSEMBLY
6. HOSE VALVE
7. ELECTRIC ALARM BELL
8. GROOVED FITTINGS
9. THREADED FITTINGS
10. SPRINKLER PIPE
11. HANGER ATTACHMENTS

Hydraulic Calculations by HydraCALC

Phoenix Fire Protection
2863 Lee Avenue
Sanford, NC 27332
919-774-3042

Larry D Taylor

Nicet Level IV_Cert. No. 112126

Job Name	:	FLATWOODS MIDDLE SCHOOL
Drawing	:	FP-13
Location	:	LILLINGTON, NC
Remote Area	:	1
Contract	:	C05-25
Data File	:	Flatwoods Middle School Area 1.WXF

HYDRAULIC CALCULATIONS
for

JOB NAME FLATWOODS MIDDLE SCHOOL
Location LILLINGTON, NC
Drawing # FP-13
Contract # C05-25
Date 11-11-2025

DESIGN
Remote area # 1
Remote area location 600 MECHANICAL PLATFORM
Occupancy classification OH-I
Density 0.15 - Gpm/SqFt
Area of application 7 sprinklers - SqFt
Coverage/sprinkler 120 - SqFt
Type of sprinkler calculated K 5.6
 # Sprinklers calculated 7
In-rack demand N/A - GPM
Hose streams 250 - GPM
Total water required (including hose streams) 381.097 - GPM @ 77.3138 - Psi
Type of system WET
Volume of system (dry or pre-action) N/A - Gal

WATER SUPPLY INFORMATION
Test date 07-17-2025
Location SITE HYDRANT
Source of info HARNETT COUNTY

CONTRACTOR INFO Phoenix Fire Protection
Address 2863 Lee Avenue / Sanford, NC 27332
Phone # 919-774-3042
Name of designer KM
Authority having jurisdiction HARNETT COUNTY
NOTES:
Revised 11-11-2025

text1(35) - invisible

Water Supply Curve

Phoenix Fire Protection
FLATWOODS MIDDLE SCHOOL

Date 11-11-2025

City Water Supply:
- C1 - Static Pressure : 88
- C2 - Residual Pressure: 73
- C2 - Residual Flow : 1119

Demand:
- D1 - Elevation : 18.913
- D2 - System Flow : 131.097
- D2 - System Pressure : 77.314
- Hose (Demand) : 250
- D3 - System Demand : 381.097
- Safety Margin : 8.641

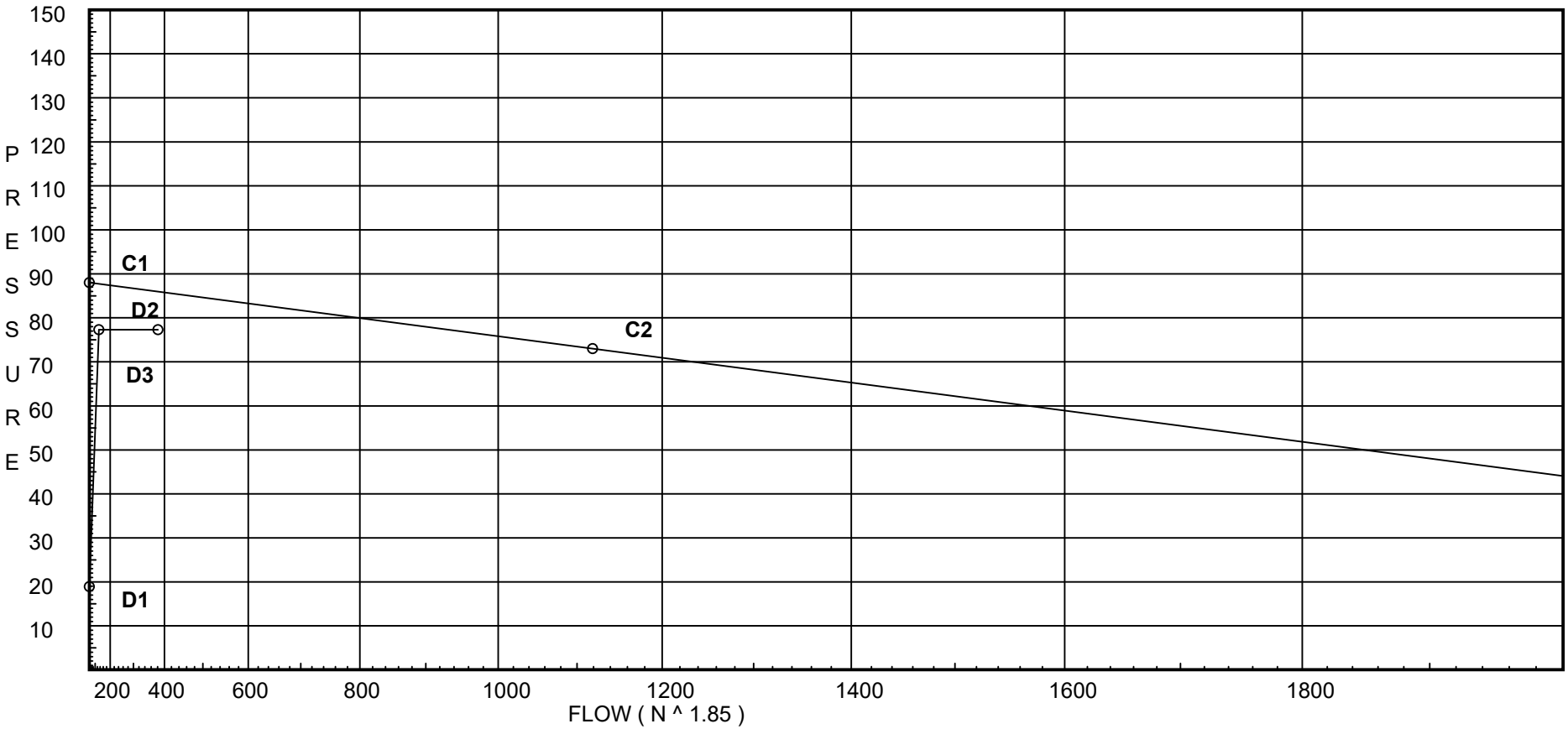

Flow Diagram

18 54.2 91.4 131.1 131.1 131.1 131.1 231.1 381.1

1* ← *2* ← *3* ← *4* ← *5* ← *6* ← *7* ← *900* ← *901* ← *902* ← *903* ← *904* ← *TR1* ← *BR1* ← *BASR* ← *U2* ← *HYD* ← *U1* ← *TEST

36 72.6 110.8 131.1 131.1 131.1 131.1 231.1 381.1

Fittings Used Summary

Fitting Legend

Abbrev.	Name	½	¾	1	1¼	1½	2	2½	3	3½	4	5	6	8	10	12	14	16	18	20	24
B	NFPA 13 Butterfly Valve	0	0	0	0	0	6	7	10	0	12	9	10	12	19	21	0	0	0	0	0
E	NFPA 13 90' Standard Elbow	0	2	2	3	4	5	6	7	8	10	12	14	18	22	27	35	40	45	50	61
G	NFPA 13 Gate Valve	0	0	0	0	0	1	1	1	1	2	2	3	4	5	6	7	8	10	11	13
S	NFPA 13 Swing Check	0	0	5	7	9	11	14	16	19	22	27	32	45	55	65					
T	NFPA 13 90' Flow thru Tee	3	4	5	6	8	10	12	15	17	20	25	30	35	50	60	71	81	91	101	121
V	Vic 90' Firelock Ell #001	0	0	0	2.00	2.63	3.5	4.4	5	0	6.88	8.5	10	13	17	20	0	0	0	0	0
X	Vic 90' Firelock Tee #002 Branch	0	0	0	7.5	6.63	8.5	10.9	13	0	16	21	25	33	41	50	0	0	0	0	0
Zai	Ames 4000SS	Fitting generates a Fixed Loss Based on Flow																			

Units Summary

Diameter Units	Inches
Length Units	Feet
Flow Units	US Gallons per Minute
Pressure Units	Pounds per Square Inch

Note: Fitting Legend provides equivalent pipe lengths for fittings types of various diameters. Equivalent lengths shown are standard for actual diameters of Sched 40 pipe and CFactors of 120 except as noted with *. The fittings marked with a * show equivalent lengths values supplied by manufacturers based on specific pipe diameters and CFactors and they require no adjustment. All values for fittings not marked with a * will be adjusted in the calculation for CFactors of other than 120 and diameters other than Sched 40 per NFPA.

SUPPLY ANALYSIS

Node at Source	Static Pressure	Residual Pressure	Flow	Available Pressure	Total Demand	Required Pressure
TEST	88.0	73	1119.0	85.955	381.1	77.314

NODE ANALYSIS

Node Tag	Elevation	Node Type	Pressure at Node	Discharge at Node	Notes	
1	40.67	5.6	10.33	18.0	0.15	120
2	40.67	5.6	10.37	18.03	0.15	120
3	40.67	5.6	10.5	18.15	0.15	120
4	40.67	5.6	10.79	18.4	0.15	120
5	40.67	5.6	11.28	18.81	0.15	120
6	40.67	5.6	12.04	19.43	0.15	120
7	40.67	5.6	13.11	20.28	0.15	120
900	40.67		41.83			
901	27.0		50.79			
902	35.0		47.99			
903	11.833		58.17			
904	11.833		58.48			
TR1	11.833		58.85			
BR1	3.0		62.72			
BASR	1.0		63.59	100.0		
U2	-3.0		76.75			
HYD	-3.0		76.76	150.0		
U1	-3.0		76.9			
TEST	-3.0		77.31			

Final Calculations : Hazen-Williams

Node1 to Node2	Elev1 Elev2	K Fact	Qa Qt	Nom Act	Fitting or Eqiv	Len	Pipe Ftngs Total	CFact Pf/Ft	Pt Pe Pf	******* Notes ******
1	40.670	5.60	18.00	2			11.670	120	10.332	
to									0.0	
2	40.670		18.0	2.157			11.670	0.0032	0.037	Vel = 1.58
2	40.670	5.60	18.03	2			11.670	120	10.369	
to									0.0	
3	40.670		36.03	2.157			11.670	0.0116	0.135	Vel = 3.16
3	40.670	5.60	18.15	2			11.670	120	10.504	
to									0.0	
4	40.670		54.18	2.157			11.670	0.0245	0.286	Vel = 4.76
4	40.670	5.60	18.40	2			11.670	120	10.790	
to									0.0	
5	40.670		72.58	2.157			11.670	0.0422	0.493	Vel = 6.37
5	40.670	5.60	18.81	2			11.670	120	11.283	
to									0.0	
6	40.670		91.39	2.157			11.670	0.0646	0.754	Vel = 8.02
6	40.670	5.60	19.43	2			11.670	120	12.037	
to									0.0	
7	40.670		110.82	2.157			11.670	0.0924	1.078	Vel = 9.73
7	40.670	5.60	20.28	2	2V	8.615	219.290	120	13.115	
to							8.615		0.0	
900	40.670		131.1	2.157			227.905	0.1260	28.714	Vel = 11.51
900	40.670		0.0	2	X	10.461	13.670	120	41.829	
to							10.461		5.920	
901	27		131.1	2.157			24.131	0.1260	3.041	Vel = 11.51
901	27		0.0	4	3V	27.177	118.500	120	50.790	
to							27.177		-3.465	
902	35		131.1	4.26			145.677	0.0046	0.668	Vel = 2.95
902	35		0.0	4	V	9.059	23.170	120	47.993	
to							9.059		10.034	
903	11.833		131.1	4.26			32.229	0.0046	0.147	Vel = 2.95
903	11.833		0.0	4	V	9.059	57.000	120	58.174	
to							9.059		0.0	
904	11.833		131.1	4.26			66.059	0.0046	0.302	Vel = 2.95
904	11.833		0.0	4	2V	18.118	43.333	120	58.476	
to					X	21.067	39.185		0.0	
TR1	11.833		131.1	4.26			82.518	0.0046	0.378	Vel = 2.95
TR1	11.833		0.0	6	S	40.235	8.833	120	58.854	
to					B	12.573	52.808		3.826	
BR1	3		131.1	6.357			61.641	0.0006	0.040	Vel = 1.33
BR1	3		0.0	6			2.000	120	62.720	
to									0.866	
BASR	1		131.1	6.357			2.000	0.0010	0.002	Vel = 1.33
BASR	1	H100	100.00	8	Zai	0.0	91.000	150	63.588	
to					T	52.855	200.850		13.041	* * Fixed Loss = 11.308
U2	-3		231.1	7.98	2G	12.081	291.850	0.0004	0.119	Vel = 1.48
					5E	135.913				
U2	-3		0.0	8	G	6.041	16.000	150	76.748	
to							6.040		0.0	
HYD	-3		231.1	7.98			22.040	0.0004	0.008	Vel = 1.48

Final Calculations : Hazen-Williams

Node1 to Node2	Elev1 Elev2	K Fact	Qa Qt	Nom Act	Fitting or Eqiv	Len	Pipe Ftngs Total	CFact Pf/Ft	Pt Pe Pf	******* Notes ******
HYD	-3	H150	150.00	8	G	6.326	142.000	140	76.756	
to							6.326		0.0	
U1	-3		381.1	8.27			148.326	0.0010	0.146	Vel = 2.28
U1	-3		0.0	8	2G	12.652	352.000	140	76.902	
to					T	55.354	68.006		0.0	
TEST	-3		381.1	8.27			420.006	0.0010	0.412	Vel = 2.28
			0.0							
TEST			381.10						77.314	K Factor = 43.34

Hydraulic Calculations by HydraCALC

Phoenix Fire Protection
2863 Lee Avenue
Sanford, NC 27332
919-774-3042

Larry D Taylor

Nicet Level IV_Cert. No. 112126

Job Name	:	FLATWOODS MIDDLE SCHOOL
Drawing	:	FP-11
Location	:	LILLINGTON, NC
Remote Area	:	2
Contract	:	C05-25
Data File	:	Flatwoods Middle School Area 2.WXF

HYDRAULIC CALCULATIONS
for

JOB NAME FLATWOODS MIDDLE SCHOOL
Location LILLINGTON, NC
Drawing # FP-11
Contract # C05-25
Date 11-11-2025

DESIGN
Remote area # 2
Remote area location 400 MECHANICAL PLATFORM
Occupancy classification OH-I
Density 0.15 - Gpm/SqFt
Area of application 1500 - SqFt
Coverage/sprinkler 120 - SqFt
Type of sprinkler calculated K 5.6
 # Sprinklers calculated 7
In-rack demand N/A - GPM
Hose streams 250 - GPM
Total water required (including hose streams) 381.097 - GPM @ 67.4053 - Psi
Type of system WET
Volume of system (dry or pre-action) N/A - Gal

WATER SUPPLY INFORMATION
Test date 07-17-2025
Location SITE HYDRANT
Source of info HARNETT COUNTY

CONTRACTOR INFO Phoenix Fire Protection
Address 2863 Lee Avenue / Sanford, NC 27332
Phone # 919-774-3042
Name of designer KM
Authority having jurisdiction HARNETT COUNTY
NOTES:
Revised 11-11-2025

text1(35) - invisible

City Water Supply:
- C1 - Static Pressure : 88
- C2 - Residual Pressure: 73
- C2 - Residual Flow : 1119

Demand:
- D1 - Elevation : 13.786
- D2 - System Flow : 131.097
- D2 - System Pressure : 67.405
- Hose (Demand) : 250
- D3 - System Demand : 381.097
- Safety Margin : 18.550

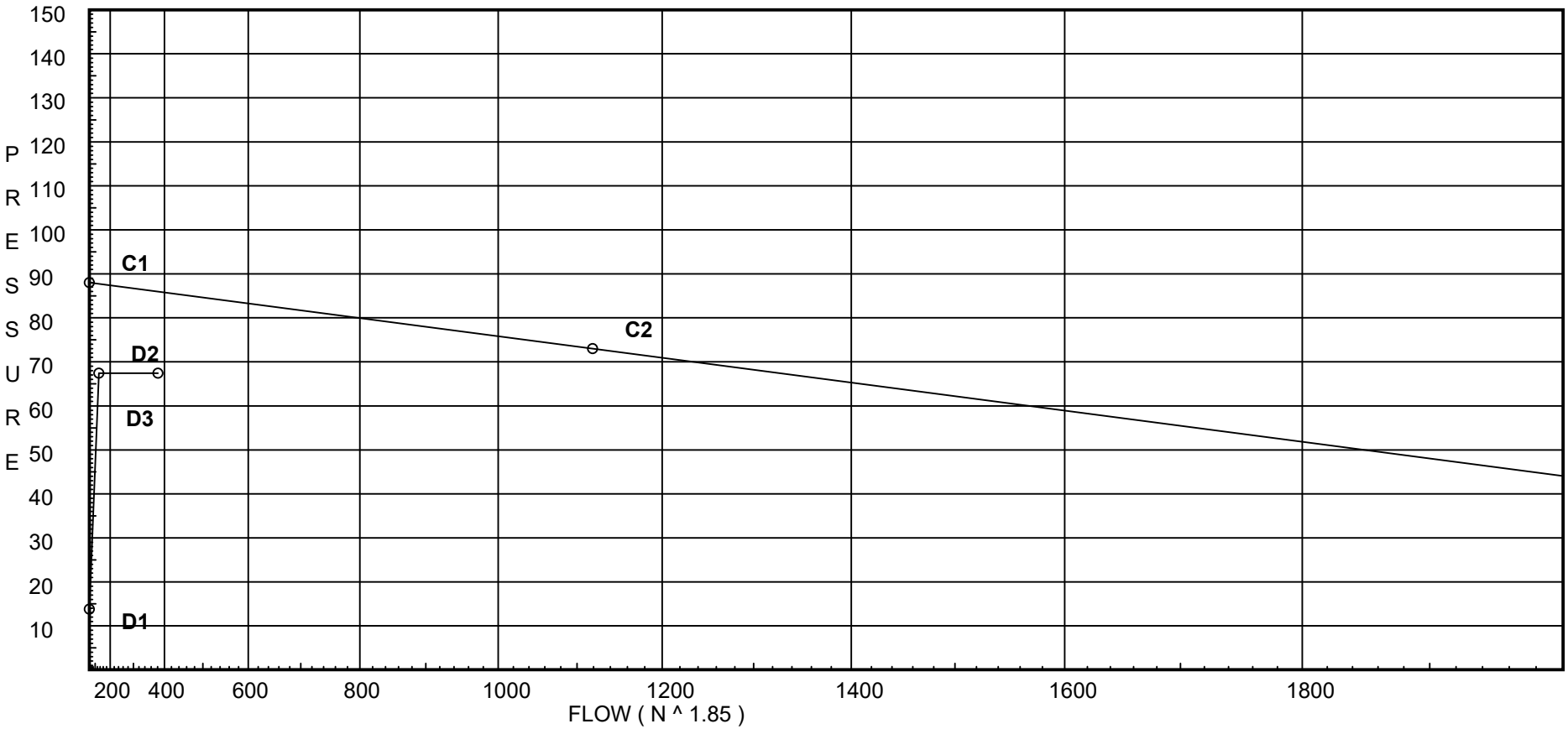

Flow Diagram

18 54.2 91.4 131.1 131.1 131.1 131.1 131.1 131.1 131.1 231.1 381.1

8* ← *9* ← *10* ← *11* ← *12* ← *13* ← *14* ← *15* ← *910* ← *911* ← *912* ← *913* ← *914* ← *915* ← *916* ← *917* ← *918* ← *TR3* ← *BR3* ← *BR1* ← *BASR* ← *U2* ← *HYD* ← *U1* ← *TEST

36 72.6 110.8 131.1 131.1 131.1 131.1 131.1 131.1 131.1 231.1 381.1

Fittings Used Summary

Fitting Legend

Abbrev.	Name	½	¾	1	1¼	1½	2	2½	3	3½	4	5	6	8	10	12	14	16	18	20	24
B	NFPA 13 Butterfly Valve	0	0	0	0	0	6	7	10	0	12	9	10	12	19	21	0	0	0	0	0
E	NFPA 13 90' Standard Elbow	0	2	2	3	4	5	6	7	8	10	12	14	18	22	27	35	40	45	50	61
G	NFPA 13 Gate Valve	0	0	0	0	0	1	1	1	1	2	2	3	4	5	6	7	8	10	11	13
S	NFPA 13 Swing Check	0	0	5	7	9	11	14	16	19	22	27	32	45	55	65					
T	NFPA 13 90' Flow thru Tee	3	4	5	6	8	10	12	15	17	20	25	30	35	50	60	71	81	91	101	121
V	Vic 90' Firelock Ell #001	0	0	0	2.00	2.63	3.5	4.4	5	0	6.88	8.5	10	13	17	20	0	0	0	0	0
X	Vic 90' Firelock Tee #002 Branch	0	0	0	7.5	6.63	8.5	10.9	13	0	16	21	25	33	41	50	0	0	0	0	0
Zai	Ames 4000SS	Fitting generates a Fixed Loss Based on Flow																			

Units Summary

Diameter Units	Inches
Length Units	Feet
Flow Units	US Gallons per Minute
Pressure Units	Pounds per Square Inch

Note: Fitting Legend provides equivalent pipe lengths for fittings types of various diameters. Equivalent lengths shown are standard for actual diameters of Sched 40 pipe and CFactors of 120 except as noted with *. The fittings marked with a * show equivalent lengths values supplied by manufacturers based on specific pipe diameters and CFactors and they require no adjustment. All values for fittings not marked with a * will be adjusted in the calculation for CFactors of other than 120 and diameters other than Sched 40 per NFPA.

SUPPLY ANALYSIS

Node at Source	Static Pressure	Residual Pressure	Flow	Available Pressure	Total Demand	Required Pressure
TEST	88.0	73	1119.0	85.955	381.1	67.405

NODE ANALYSIS

Node Tag	Elevation	Node Type	Pressure at Node	Discharge at Node	Notes	
8	28.83	5.6	10.33	18.0	0.15	120
9	28.83	5.6	10.37	18.03	0.15	120
10	28.83	5.6	10.5	18.15	0.15	120
11	28.83	5.6	10.79	18.4	0.15	120
12	28.83	5.6	11.28	18.81	0.15	120
13	28.83	5.6	12.04	19.43	0.15	120
14	28.83	5.6	13.11	20.28	0.15	120
15	30.0		39.25			
910	30.0		39.9			
911	11.0		48.3			
912	11.0		48.5			
913	13.0		47.88			
914	15.67		46.86			
915	29.0		41.11			
916	29.0		41.19			
917	34.67		38.88			
918	11.5		48.95			
TR3	11.5		49.04			
BR3	3.0		52.79			
BR1	3.0		52.81			
BASR	1.0		53.68	100.0		
U2	-3.0		66.84			
HYD	-3.0		66.85	150.0		
U1	-3.0		66.99			
TEST	-3.0		67.41			

Node1 to Node2	Elev1 Elev2	K Fact	Qa Qt	Nom Act	Fitting or Eqiv	Len	Pipe Ftngs Total	CFact Pf/Ft	Pt Pe Pf	******* Notes ******
8	28.830	5.60	18.00	2			11.670	120	10.332	
to									0.0	
9	28.830		18.0	2.157			11.670	0.0032	0.037	Vel = 1.58
9	28.830	5.60	18.03	2			11.670	120	10.369	
to									0.0	
10	28.830		36.03	2.157			11.670	0.0116	0.135	Vel = 3.16
10	28.830	5.60	18.15	2			11.670	120	10.504	
to									0.0	
11	28.830		54.18	2.157			11.670	0.0245	0.286	Vel = 4.76
11	28.830	5.60	18.40	2			11.670	120	10.790	
to									0.0	
12	28.830		72.58	2.157			11.670	0.0422	0.493	Vel = 6.37
12	28.830	5.60	18.81	2			11.670	120	11.283	
to									0.0	
13	28.830		91.39	2.157			11.670	0.0646	0.754	Vel = 8.02
13	28.830	5.60	19.43	2			11.670	120	12.037	
to									0.0	
14	28.830		110.82	2.157			11.670	0.0924	1.078	Vel = 9.73
14	28.830	5.60	20.28	2	2V	8.615	190.500	120	13.115	
to					T	12.307	20.922		-0.507	
15	30		131.1	2.157			211.422	0.1260	26.638	Vel = 11.51
15	30		0.0	4	X	21.067	112.410	120	39.246	
to					V	9.059	30.126		0.0	
910	30		131.1	4.26			142.536	0.0046	0.653	Vel = 2.95
910	30		0.0	4	2V	18.118	19.000	120	39.899	
to							18.118		8.229	
911	11		131.1	4.26			37.118	0.0046	0.170	Vel = 2.95
911	11		0.0	4	X	21.067	23.917	120	48.298	
to							21.067		0.0	
912	11		131.1	4.26			44.984	0.0046	0.206	Vel = 2.95
912	11		0.0	4	2V	18.118	13.083	120	48.504	
to					X	21.067	39.185		-0.866	
913	13		131.1	4.26			52.268	0.0046	0.239	Vel = 2.95
913	13		0.0	6	8V	100.587	118.417	120	47.877	
to							100.587		-1.156	
914	15.670		131.1	6.357			219.004	0.0006	0.142	Vel = 1.33
914	15.670		0.0	6	V	12.573	13.333	120	46.863	
to							12.573		-5.773	
915	29		131.1	6.357			25.906	0.0007	0.017	Vel = 1.33
915	29		0.0	6	V	12.573	120.250	120	41.107	
to							12.573		0.0	
916	29		131.1	6.357			132.823	0.0007	0.087	Vel = 1.33
916	29		0.0	6	4V	50.294	142.000	120	41.194	
to					X	31.433	81.727		-2.456	
917	34.670		131.1	6.357			223.727	0.0007	0.146	Vel = 1.33
917	34.670		0.0	6	2V	25.147	17.500	120	38.884	
to							25.147		10.035	
918	11.500		131.1	6.357			42.647	0.0007	0.028	Vel = 1.33

Final Calculations : Hazen-Williams

Node1 to Node2	Elev1 Elev2	K Fact	Qa Qt	Nom Act	Fitting or Eqiv	Len	Pipe Ftngs Total	CFact Pf/Ft	Pt Pe Pf	******* Notes ******
918	11.500		0.0	6	4V	50.294	97.000	120	48.947	
to							50.294		0.0	
TR3	11.500		131.1	6.357			147.294	0.0007	0.096	Vel = 1.33
TR3	11.500		0.0	6	S	40.235	8.500	120	49.043	
to					B	12.573	90.528		3.681	
BR3	3		131.1	6.357	T	37.72	99.028	0.0007	0.065	Vel = 1.33
BR3	3		0.0	6	X	31.433	4.000	120	52.789	
to							31.433		0.0	
BR1	3		131.1	6.357			35.433	0.0006	0.023	Vel = 1.33
BR1	3		0.0	6			2.000	120	52.812	
to									0.866	
BASR	1		131.1	6.357			2.000	0.0005	0.001	Vel = 1.33
BASR	1	H100	100.00	8	Zai	0.0	91.000	150	53.679	
to					T	52.855	200.850		13.041	* * Fixed Loss = 11.308
U2	-3		231.1	7.98	2G	12.081	291.850	0.0004	0.119	Vel = 1.48
					5E	135.913				
U2	-3		0.0	8	G	6.041	16.000	150	66.839	
to							6.040		0.0	
HYD	-3		231.1	7.98			22.040	0.0004	0.009	Vel = 1.48
HYD	-3	H150	150.00	8	G	6.326	142.000	140	66.848	
to							6.326		0.0	
U1	-3		381.1	8.27			148.326	0.0010	0.145	Vel = 2.28
U1	-3		0.0	8	2G	12.652	352.000	140	66.993	
to					T	55.354	68.006		0.0	
TEST	-3		381.1	8.27			420.006	0.0010	0.412	Vel = 2.28
			0.0							
TEST			381.10						67.405	K Factor = 46.42

Hydraulic Calculations by HydraCALC

Phoenix Fire Protection
2863 Lee Avenue
Sanford, NC 27332
919-774-3042

Larry D Taylor

Nicet Level IV_Cert. No. 112126

Job Name	:	FLATWOODS MIDDLE SCHOOL
Drawing	:	FP-8
Location	:	LILLINGTON, NC
Remote Area	:	3
Contract	:	C05-25
Data File	:	Flatwoods Middle School Area 3.WXF

HYDRAULIC CALCULATIONS
for

JOB NAME FLATWOODS MIDDLE SCHOOL
Location LILLINGTON, NC
Drawing # FP-8
Contract # C05-25
Date 11-11-2025

DESIGN
Remote area # 3
Remote area location 100 MECHANICAL PLATFORM
Occupancy classification OH-I
Density 0.15 - Gpm/SqFt
Area of application 1500 - SqFt
Coverage/sprinkler 130 - SqFt
Type of sprinkler calculated K 5.6
 # Sprinklers calculated 15
In-rack demand N/A - GPM
Hose streams 250 - GPM
Total water required (including hose streams) 572.388 - GPM @ 56.6485 - Psi
Type of system WET
Volume of system (dry or pre-action) N/A - Gal

WATER SUPPLY INFORMATION
Test date 07-17-2025
Location SITE HYDRANT
Source of info HARNETT COUNTY

CONTRACTOR INFO Phoenix Fire Protection
Address 2863 Lee Avenue / Sanford, NC 27332
Phone # 919-774-3042
Name of designer KM
Authority having jurisdiction HARNETT COUNTY
NOTES:
Revised 11-11-2025

text1(35) - invisible

Water Supply Curve

Phoenix Fire Protection
FLATWOODS MIDDLE SCHOOL

Date 11-11-2025

City Water Supply:
- C1 - Static Pressure : 88
- C2 - Residual Pressure: 73
- C2 - Residual Flow : 1119

Demand:
- D1 - Elevation : 15.042
- D2 - System Flow : 322.388
- D2 - System Pressure : 56.648
- Hose (Demand) : 250
- D3 - System Demand : 572.388
- Safety Margin : 27.012

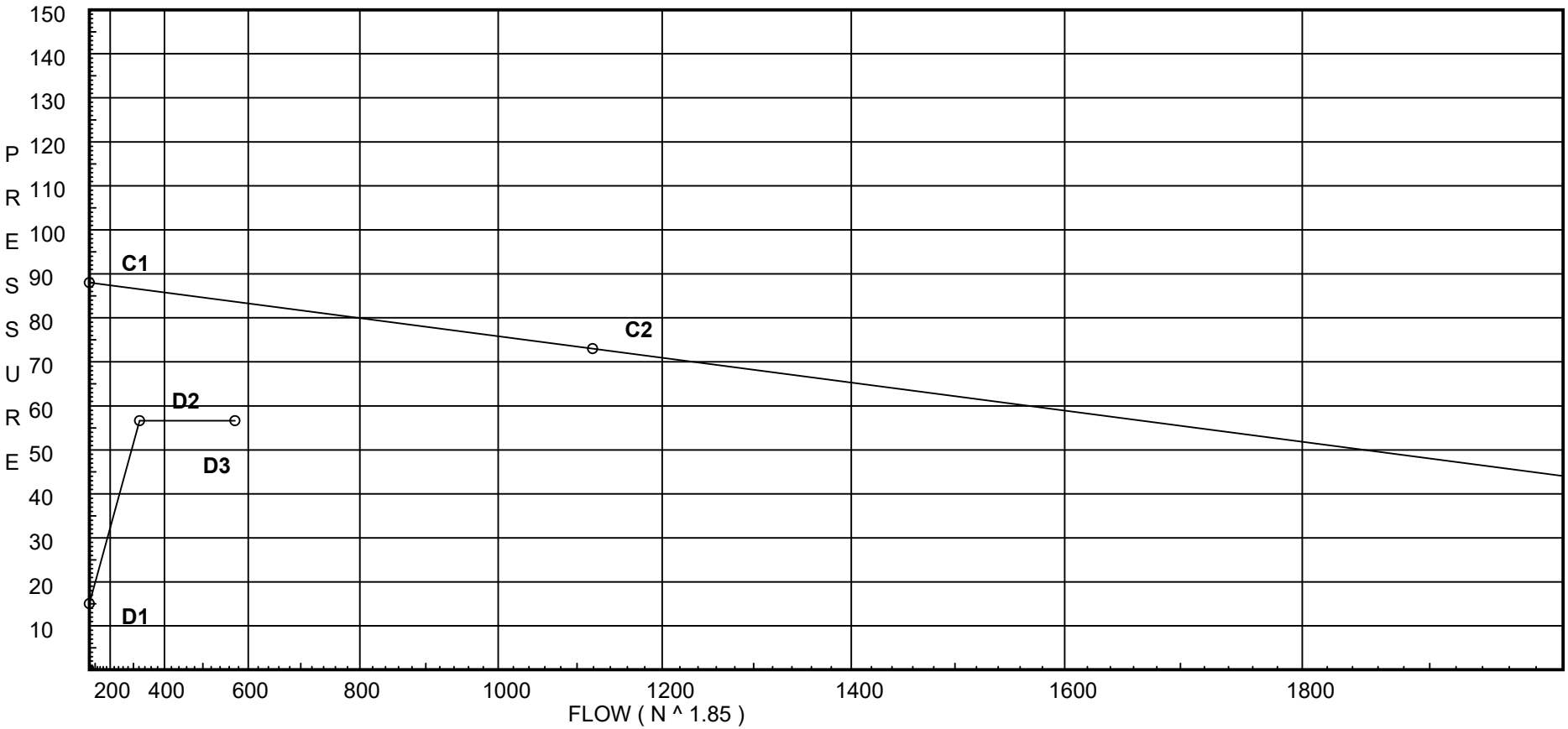

Flow Diagram


```
     19.5            59
16 ← 17  ← 18  ← 19  ← 20
            39.1         79.7

     22
21 ← 22  ← 20
            44.1

     20.2            61.1
25 ← 26  ← 27  ← 28  ← 29
            40.5         82.5

     23.2
30 ← 29


     23.3
32 ← 33  ← 34
            46.7

     23
35 ← 36  ← 34
            46.2
                 |   92.9
     123.8       |
20 ← 23          |
       |         |
       |    105.7
     105.7       |
29 ← 31          |
                 |
                 |
     92.9        |
34 ← 24          |
       |         |
       |    229.5
     105.7       |   322.4        322.4        322.4        322.4        322.4        322.4        322.4        422.4        572.4
31 ← 23  ← 24  ← 910 ← 911 ← 912 ← 913 ← 914 ← 915 ← 916 ← 917 ← 918 ← TR3 ← BR3 ← BR1 ← BASR ← U2 ← HYD ← U1 ← TEST
            229.5        322.4        322.4        322.4        322.4        322.4        322.4        322.4        572.4
```

Fittings Used Summary

Fitting Legend

Abbrev.	Name	½	¾	1	1¼	1½	2	2½	3	3½	4	5	6	8	10	12	14	16	18	20	24
B	NFPA 13 Butterfly Valve	0	0	0	0	0	6	7	10	0	12	9	10	12	19	21	0	0	0	0	0
E	NFPA 13 90' Standard Elbow	0	2	2	3	4	5	6	7	8	10	12	14	18	22	27	35	40	45	50	61
G	NFPA 13 Gate Valve	0	0	0	0	0	1	1	1	1	2	2	3	4	5	6	7	8	10	11	13
S	NFPA 13 Swing Check	0	0	5	7	9	11	14	16	19	22	27	32	45	55	65					
T	NFPA 13 90' Flow thru Tee	3	4	5	6	8	10	12	15	17	20	25	30	35	50	60	71	81	91	101	121
V	Vic 90' Firelock Ell #001	0	0	0	2.00	2.63	3.5	4.4	5	0	6.88	8.5	10	13	17	20	0	0	0	0	0
X	Vic 90' Firelock Tee #002 Branch	0	0	0	7.5	6.63	8.5	10.9	13	0	16	21	25	33	41	50	0	0	0	0	0
Zai	Ames 4000SS	Fitting generates a Fixed Loss Based on Flow																			

Units Summary

Diameter Units	Inches
Length Units	Feet
Flow Units	US Gallons per Minute
Pressure Units	Pounds per Square Inch

Note: Fitting Legend provides equivalent pipe lengths for fittings types of various diameters. Equivalent lengths shown are standard for actual diameters of Sched 40 pipe and CFactors of 120 except as noted with *. The fittings marked with a * show equivalent lengths values supplied by manufacturers based on specific pipe diameters and CFactors and they require no adjustment. All values for fittings not marked with a * will be adjusted in the calculation for CFactors of other than 120 and diameters other than Sched 40 per NFPA.

SUPPLY ANALYSIS

Node at Source	Static Pressure	Residual Pressure	Flow	Available Pressure	Total Demand	Required Pressure
TEST	88.0	73	1119.0	83.66	572.39	56.648

NODE ANALYSIS

Node Tag	Elevation	Node Type	Pressure at Node	Discharge at Node	Notes	
16	31.73	5.6	12.13	19.5	0.15	130
17	31.73	5.6	12.24	19.59	0.15	130
18	31.73	5.6	12.67	19.93	0.15	130
19	31.73	5.6	13.59	20.64	0.15	130
21	31.82	5.6	15.36	21.95	0.15	130
22	31.73	5.6	15.66	22.16	0.15	130
25	31.47	5.6	13.01	20.2	0.15	130
26	31.47	5.6	13.13	20.29	0.15	130
27	31.47	5.6	13.59	20.64	0.15	130
28	31.47	5.6	14.57	21.37	0.15	130
30	31.47	5.6	17.22	23.24	0.15	130
32	31.98	5.6	17.31	23.3	0.15	130
33	31.98	5.6	17.41	23.37	0.15	130
35	31.98	5.6	16.92	23.04	0.15	130
36	31.98	5.6	17.09	23.15	0.15	130
20	31.73		16.24			
29	31.47		17.39			
34	31.98		18.05			
31	30.14		21.16			
23	30.39		21.09			
24	30.65		21.14			
910	30.0		23.85			
911	11.0		32.76			
912	11.0		33.84			
913	13.0		34.37			
914	15.67		33.97			
915	29.0		28.29			
916	29.0		28.74			
917	34.67		27.06			
918	11.5		37.24			
TR3	11.5		37.75			
BR3	3.0		41.77			
BR1	3.0		41.89			
BASR	1.0		42.77	100.0		
U2	-3.0		55.44			
HYD	-3.0		55.47	150.0		
U1	-3.0		55.77			
TEST	-3.0		56.65			

Node1 to Node2	Elev1 Elev2	K Fact	Qa Qt	Nom Act	Fitting or Eqiv	Len	Pipe Ftngs Total	CFact Pf/Ft	Pt Pe Pf	******* Notes ******
16	31.73	5.60	19.50	1.5			9.500	120	12.125	
to									0.0	
17	31.73		19.5	1.682			9.500	0.0125	0.119	Vel = 2.82
17	31.73	5.60	19.59	1.5			9.500	120	12.244	
to									0.0	
18	31.73		39.09	1.682			9.500	0.0451	0.428	Vel = 5.64
18	31.73	5.60	19.94	1.5			9.500	120	12.672	
to									0.0	
19	31.73		59.03	1.682			9.500	0.0967	0.919	Vel = 8.52
19	31.73	5.60	20.64	1.5	X	8.204	7.520	120	13.591	
to							8.204		0.0	
20	31.73		79.67	1.682			15.724	0.1684	2.648	Vel = 11.50
			0.0							
20			79.67						16.239	K Factor = 19.77
21	31.82	5.60	21.95	1.5	2V	6.509	10.290	120	15.365	
to							6.509		0.039	
22	31.73		21.95	1.682			16.799	0.0155	0.260	Vel = 3.17
22	31.73	5.60	22.16	1.5	X	8.204	1.980	120	15.664	
to							8.204		0.0	
20	31.73		44.11	1.682			10.184	0.0565	0.575	Vel = 6.37
			0.0							
20			44.11						16.239	K Factor = 10.95
25	31.470	5.60	20.20	1.5			9.500	120	13.006	
to									0.0	
26	31.47		20.2	1.682			9.500	0.0133	0.126	Vel = 2.92
26	31.47	5.60	20.29	1.5			9.500	120	13.132	
to									0.0	
27	31.47		40.49	1.682			9.500	0.0481	0.457	Vel = 5.85
27	31.47	5.60	20.64	1.5			9.500	120	13.589	
to									0.0	
28	31.47		61.13	1.682			9.500	0.1032	0.980	Vel = 8.83
28	31.47	5.60	21.38	1.5	X	8.204	7.520	120	14.569	
to							8.204		0.0	
29	31.47		82.51	1.682			15.724	0.1797	2.825	Vel = 11.91
			0.0							
29			82.51						17.394	K Factor = 19.78
30	31.47	5.60	23.24	1.5	X	8.204	1.980	120	17.218	
to							8.204		0.0	
29	31.47		23.24	1.682			10.184	0.0173	0.176	Vel = 3.36
			0.0							
29			23.24						17.394	K Factor = 5.57
32	31.98	5.60	23.30	1.5			6.000	120	17.310	
to									0.0	
33	31.98		23.3	1.682			6.000	0.0173	0.104	Vel = 3.36
33	31.98	5.60	23.37	1.5	X	8.204	1.980	120	17.414	
to							8.204		0.0	
34	31.98		46.67	1.682			10.184	0.0626	0.638	Vel = 6.74
			0.0							

Node1 to Node2	Elev1 Elev2	K Fact	Qa Qt	Nom Act	Fitting or Eqiv	Len	Pipe Ftngs Total	CFact Pf/Ft	Pt Pe Pf	******* Notes ******
34			46.67						18.052	K Factor = 10.98
35	31.98	5.60	23.04	1.5			9.500	120	16.925	
to									0.0	
36	31.98		23.04	1.682			9.500	0.0169	0.161	Vel = 3.33
36	31.98	5.60	23.15	1.5	X	8.204	7.520	120	17.086	
to							8.204		0.0	
34	31.98		46.19	1.682			15.724	0.0614	0.966	Vel = 6.67
			0.0							
34			46.19						18.052	K Factor = 10.87
20	31.73		123.79	1.5	T	9.9	1.330	120	16.239	
to							9.900		0.580	
23	30.39		123.79	1.682			11.230	0.3805	4.273	Vel = 17.87
			0.0							
23			123.79						21.092	K Factor = 26.95
29	31.47		105.74	1.5	T	9.9	1.330	120	17.394	
to							9.900		0.576	
31	30.14		105.74	1.682			11.230	0.2842	3.192	Vel = 15.27
			0.0							
31			105.74						21.162	K Factor = 22.99
34	31.98		92.85	1.5	T	9.9	1.330	120	18.052	
to							9.900		0.576	
24	30.65		92.85	1.682			11.230	0.2235	2.510	Vel = 13.41
			0.0							
24			92.85						21.138	K Factor = 20.20
31	30.14		105.74	4			12.290	120	21.162	
to									-0.108	
23	30.39		105.74	4.26			12.290	0.0031	0.038	Vel = 2.38
23	30.39		123.79	4			12.290	120	21.092	
to									-0.113	
24	30.65		229.53	4.26			12.290	0.0129	0.159	Vel = 5.17
24	30.65		92.86	4	2V	18.118	82.180	120	21.138	
to							18.118		0.282	
910	30		322.39	4.26			100.298	0.0242	2.427	Vel = 7.26
910	30		0.0	4	V	9.059	19.000	120	23.847	
to							9.059		8.229	
911	11		322.39	4.26			28.059	0.0242	0.679	Vel = 7.26
911	11		0.0	4	X	21.067	23.917	120	32.755	
to							21.067		0.0	
912	11		322.39	4.26			44.984	0.0242	1.089	Vel = 7.26
912	11		0.0	4	2V	18.118	13.083	120	33.844	
to					T	26.334	44.452		-0.866	
913	13		322.39	4.26			57.535	0.0242	1.393	Vel = 7.26
913	13		0.0	6	8V	100.587	118.417	120	34.371	
to							100.587		-1.156	
914	15.670		322.39	6.357			219.004	0.0034	0.754	Vel = 3.26
914	15.670		0.0	6	V	12.573	13.333	120	33.969	
to							12.573		-5.773	
915	29		322.39	6.357			25.906	0.0034	0.089	Vel = 3.26

Final Calculations : Hazen-Williams

Node1 to Node2	Elev1 Elev2	K Fact	Qa Qt	Nom Act	Fitting or Eqiv	Len	Pipe Ftngs Total	CFact Pf/Ft	Pt Pe Pf	******* Notes ******
915	29		0.0	6	V	12.573	120.250	120	28.285	
to							12.573		0.0	
916	29		322.39	6.357			132.823	0.0034	0.458	Vel = 3.26
916	29		0.0	6	4V	50.294	142.000	120	28.743	
to					X	31.433	81.727		-2.456	
917	34.670		322.39	6.357			223.727	0.0034	0.771	Vel = 3.26
917	34.670		0.0	6	2V	25.147	17.500	120	27.058	
to							25.147		10.035	
918	11.500		322.39	6.357			42.647	0.0034	0.147	Vel = 3.26
918	11.500		0.0	6	4V	50.294	97.000	120	37.240	
to							50.294		0.0	
TR3	11.500		322.39	6.357			147.294	0.0034	0.508	Vel = 3.26
TR3	11.500		0.0	6	S	40.235	8.500	120	37.748	
to					B	12.573	90.528		3.681	
BR3	3		322.39	6.357	T	37.72	99.028	0.0034	0.341	Vel = 3.26
BR3	3		0.0	6	X	31.433	4.000	120	41.770	
to							31.433		0.0	
BR1	3		322.39	6.357			35.433	0.0034	0.122	Vel = 3.26
BR1	3		0.0	6			2.000	120	41.892	
to									0.866	
BASR	1		322.39	6.357			2.000	0.0035	0.007	Vel = 3.26
BASR	1	H100	100.00	8	Zai	0.0	91.000	150	42.765	
to					T	52.855	200.850		12.311	* * Fixed Loss = 10.578
U2	-3		422.39	7.98	2G	12.081	291.850	0.0012	0.362	Vel = 2.71
					5E	135.913				
U2	-3		0.0	8	G	6.041	16.000	150	55.438	
to							6.040		0.0	
HYD	-3		422.39	7.98			22.040	0.0013	0.028	Vel = 2.71
HYD	-3	H150	150.00	8	G	6.326	142.000	140	55.466	
to							6.326		0.0	
U1	-3		572.39	8.27			148.326	0.0021	0.308	Vel = 3.42
U1	-3		0.0	8	2G	12.652	352.000	140	55.774	
to					T	55.354	68.006		0.0	
TEST	-3		572.39	8.27			420.006	0.0021	0.874	Vel = 3.42
			0.0							
TEST			572.39						56.648	K Factor = 76.05

Hydraulic Calculations by HydraCALC

Phoenix Fire Protection
2863 Lee Avenue
Sanford, NC 27332
919-774-3042

Larry D Taylor

Nicet Level IV_Cert. No. 112126

Job Name	:	FLATWOODS MIDDLE SCHOOL
Drawing	:	FP-8
Location	:	LILLINGTON, NC
Remote Area	:	4
Contract	:	C05-25
Data File	:	Flatwoods Middle School Area 4.WXF

HYDRAULIC CALCULATIONS
for

JOB NAME FLATWOODS MIDDLE SCHOOL
Location LILLINGTON, NC
Drawing # FP-8
Contract # C05-25
Date 11-11-2025

DESIGN
Remote area # 4
Remote area location 100 AUDITORIUM
Occupancy classification LIGHT
Density 0.10 - Gpm/SqFt
Area of application 1500 - SqFt
Coverage/sprinkler 196 - SqFt
Type of sprinkler calculated K 5.6
 # Sprinklers calculated 10
In-rack demand N/A - GPM
Hose streams 100 - GPM
Total water required (including hose streams) 306.148 - GPM @ 48.582 - Psi
Type of system WET
Volume of system (dry or pre-action) N/A - Gal

WATER SUPPLY INFORMATION
Test date 07-17-2025
Location SITE HYDRANT
Source of info HARNETT COUNTY

CONTRACTOR INFO Phoenix Fire Protection
Address 2863 Lee Avenue / Sanford, NC 27332
Phone # 919-774-3042
Name of designer KM
Authority having jurisdiction HARNETT COUNTY
NOTES:
Revised 11-11-2025

text1(35) - invisible

Water Supply Curve

Phoenix Fire Protection
FLATWOODS MIDDLE SCHOOL

Date 11-11-2025

City Water Supply:
- C1 - Static Pressure : 88
- C2 - Residual Pressure: 73
- C2 - Residual Flow : 1119

Demand:
- D1 - Elevation : 15.496
- D2 - System Flow : 206.148
- D2 - System Pressure : 48.582
- Hose (Demand) : 100
- D3 - System Demand : 306.148
- Safety Margin : 38.054

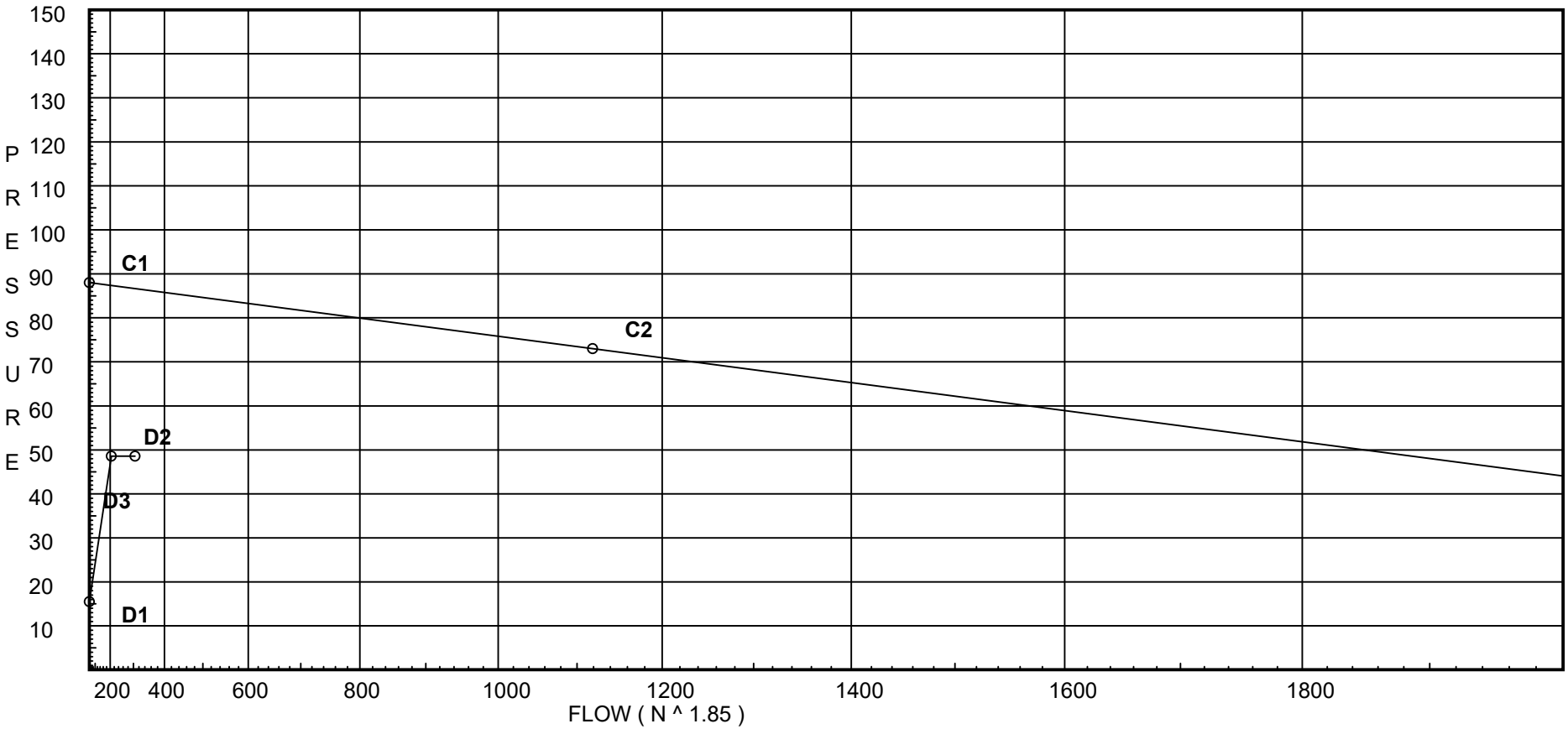

```
     19.6          59.5
37 ← 38  ← 39  ← 47
             39.3     ↑
                      |   81.1
     21.6             |
40 ← 47               |
                      |
                      |
     19.7          59.8
41 ← 42  ← 43  ← 48
             39.5

     21.6
44 ← 48
       ↑
       |   162.6
     21.7
45 ← 49


     21.8
46 ← 49
       |
       |   162.6
     81.1          206.1         206.1         206.1         206.1         206.1         206.1         206.1         206.1         206.1         206.1         306.1
47 ← 48  ← 49  ← 50  ← 15  ← 910 ← 911 ← 912 ← 913 ← 914 ← 915 ← 916 ← 917 ← 918 ← TR3 ← BR3 ← BR1 ← BASR ← U2 ← HYD ← U1 ← TEST
             162.6         206.1         206.1         206.1         206.1         206.1         206.1         206.1         206.1         206.1         306.1
```

Fittings Used Summary

Fitting Legend

Abbrev.	Name	½	¾	1	1¼	1½	2	2½	3	3½	4	5	6	8	10	12	14	16	18	20	24
B	NFPA 13 Butterfly Valve	0	0	0	0	0	6	7	10	0	12	9	10	12	19	21	0	0	0	0	0
E	NFPA 13 90' Standard Elbow	0	2	2	3	4	5	6	7	8	10	12	14	18	22	27	35	40	45	50	61
G	NFPA 13 Gate Valve	0	0	0	0	0	1	1	1	1	2	2	3	4	5	6	7	8	10	11	13
S	NFPA 13 Swing Check	0	0	5	7	9	11	14	16	19	22	27	32	45	55	65					
T	NFPA 13 90' Flow thru Tee	3	4	5	6	8	10	12	15	17	20	25	30	35	50	60	71	81	91	101	121
V	Vic 90' Firelock Ell #001	0	0	0	2.00	2.63	3.5	4.4	5	0	6.88	8.5	10	13	17	20	0	0	0	0	0
X	Vic 90' Firelock Tee #002 Branch	0	0	0	7.5	6.63	8.5	10.9	13	0	16	21	25	33	41	50	0	0	0	0	0
Zai	Ames 4000SS	Fitting generates a Fixed Loss Based on Flow																			

Units Summary

Diameter Units	Inches
Length Units	Feet
Flow Units	US Gallons per Minute
Pressure Units	Pounds per Square Inch

Note: Fitting Legend provides equivalent pipe lengths for fittings types of various diameters. Equivalent lengths shown are standard for actual diameters of Sched 40 pipe and CFactors of 120 except as noted with *. The fittings marked with a * show equivalent lengths values supplied by manufacturers based on specific pipe diameters and CFactors and they require no adjustment. All values for fittings not marked with a * will be adjusted in the calculation for CFactors of other than 120 and diameters other than Sched 40 per NFPA.

SUPPLY ANALYSIS

Node at Source	Static Pressure	Residual Pressure	Flow	Available Pressure	Total Demand	Required Pressure
TEST	88.0	73	1119.0	86.636	306.15	48.582

NODE ANALYSIS

Node Tag	Elevation	Node Type	Pressure at Node	Discharge at Node	Notes	
37	32.78	5.6	12.25	19.6	0.1	196
38	32.78	5.6	12.42	19.73	0.1	196
39	32.78	5.6	13.02	20.21	0.1	196
40	32.78	5.6	14.87	21.59	0.1	196
41	32.51	5.6	12.37	19.69	0.1	196
42	32.51	5.6	12.53	19.83	0.1	196
43	32.51	5.6	13.15	20.3	0.1	196
44	32.51	5.6	14.89	21.61	0.1	196
45	32.25	5.6	15.08	21.75	0.1	196
46	32.25	5.6	15.2	21.84	0.1	196
47	32.78		15.05			
48	32.51		15.2			
49	32.25		15.39			
50	30.0		17.35			
15	30.0		18.12			
910	30.0		19.63			
911	11.0		28.16			
912	11.0		28.63			
913	13.0		28.38			
914	15.67		27.55			
915	29.0		21.81			
916	29.0		22.02			
917	34.67		19.9			
918	11.5		30.0			
TR3	11.5		30.22			
BR3	3.0		34.05			
BR1	3.0		34.1			
BASR	1.0		34.97			
U2	-3.0		48.2			
HYD	-3.0		48.21	100.0		
U1	-3.0		48.31			
TEST	-3.0		48.58			

Node1 to Node2	Elev1 Elev2	K Fact	Qa Qt	Nom Act	Fitting or Eqiv	Len	Pipe Ftngs Total	CFact Pf/Ft	Pt Pe Pf	******* Notes ******
37	32.780	5.60	19.60	1.5			13.290	120	12.250	
to									0.0	
38	32.780		19.6	1.682			13.290	0.0126	0.167	Vel = 2.83
38	32.780	5.60	19.73	1.5			13.290	120	12.417	
to									0.0	
39	32.780		39.33	1.682			13.290	0.0457	0.607	Vel = 5.68
39	32.780	5.60	20.21	1.5	T	9.9	10.770	120	13.024	
to							9.900		0.0	
47	32.780		59.54	1.682			20.670	0.0982	2.030	Vel = 8.60
			0.0							
47			59.54						15.054	K Factor = 15.35
40	32.780	5.60	21.59	1.5	T	9.9	2.520	120	14.867	
to							9.900		0.0	
47	32.780		21.59	1.682			12.420	0.0151	0.187	Vel = 3.12
			0.0							
47			21.59						15.054	K Factor = 5.56
41	32.510	5.60	19.69	1.5			13.290	120	12.366	
to									0.0	
42	32.510		19.69	1.682			13.290	0.0127	0.169	Vel = 2.84
42	32.510	5.60	19.83	1.5			13.290	120	12.535	
to									0.0	
43	32.510		39.52	1.682			13.290	0.0460	0.611	Vel = 5.71
43	32.510	5.60	20.30	1.5	T	9.9	10.770	120	13.146	
to							9.900		0.0	
48	32.510		59.82	1.682			20.670	0.0991	2.049	Vel = 8.64
			0.0							
48			59.82						15.195	K Factor = 15.35
44	32.510	5.60	21.61	1.5	T	9.9	10.510	120	14.888	
to							9.900		0.0	
48	32.510		21.61	1.682			20.410	0.0150	0.307	Vel = 3.12
			0.0							
48			21.61						15.195	K Factor = 5.54
45	32.250	5.60	21.75	1.5	T	9.9	10.770	120	15.079	
to							9.900		0.0	
49	32.250		21.75	1.682			20.670	0.0152	0.315	Vel = 3.14
			0.0							
49			21.75						15.394	K Factor = 5.54
46	32.250	5.60	21.84	1.5	T	9.9	2.500	120	15.204	
to							9.900		0.0	
49	32.250		21.84	1.682			12.400	0.0153	0.190	Vel = 3.15
			0.0							
49			21.84						15.394	K Factor = 5.57
47	32.780		81.14	4			12.670	120	15.054	
to									0.117	
48	32.510		81.14	4.26			12.670	0.0019	0.024	Vel = 1.83
48	32.510		81.43	4			12.670	120	15.195	
to									0.113	
49	32.250		162.57	4.26			12.670	0.0068	0.086	Vel = 3.66

Node1 to Node2	Elev1 Elev2	K Fact	Qa Qt	Nom Act	Fitting or Eqiv	Len	Pipe Ftngs Total	CFact Pf/Ft	Pt Pe Pf	******* Notes ******
49	32.250		43.58	4	2V	18.118	74.500	120	15.394	
to							18.118		0.974	
50	30		206.15	4.26			92.618	0.0106	0.981	Vel = 4.64
50	30		0.0	4	V	9.059	64.000	120	17.349	
to							9.059		0.0	
15	30		206.15	4.26			73.059	0.0106	0.773	Vel = 4.64
			0.0							
15			206.15						18.122	K Factor = 48.43
15	30		206.15	4	X	21.067	112.410	120	18.122	
to					V	9.059	30.126		0.0	
910	30		206.15	4.26			142.536	0.0106	1.509	Vel = 4.64
910	30		0.0	4	V	9.059	19.000	120	19.631	
to							9.059		8.229	
911	11		206.15	4.26			28.059	0.0106	0.297	Vel = 4.64
911	11		0.0	4	X	21.067	23.917	120	28.157	
to							21.067		0.0	
912	11		206.15	4.26			44.984	0.0106	0.476	Vel = 4.64
912	11		0.0	4	2V	18.118	13.083	120	28.633	
to					T	26.334	44.452		-0.866	
913	13		206.15	4.26			57.535	0.0106	0.609	Vel = 4.64
913	13		0.0	6	8V	100.587	118.417	120	28.376	
to							100.587		-1.156	
914	15.670		206.15	6.357			219.004	0.0015	0.329	Vel = 2.08
914	15.670		0.0	6	V	12.573	13.333	120	27.549	
to							12.573		-5.773	
915	29		206.15	6.357			25.906	0.0015	0.039	Vel = 2.08
915	29		0.0	6	V	12.573	120.250	120	21.815	
to							12.573		0.0	
916	29		206.15	6.357			132.823	0.0015	0.200	Vel = 2.08
916	29		0.0	6	4V	50.294	142.000	120	22.015	
to					X	31.433	81.727		-2.456	
917	34.670		206.15	6.357			223.727	0.0015	0.337	Vel = 2.08
917	34.670		0.0	6	2V	25.147	17.500	120	19.896	
to							25.147		10.035	
918	11.500		206.15	6.357			42.647	0.0015	0.065	Vel = 2.08
918	11.500		0.0	6	4V	50.294	97.000	120	29.996	
to							50.294		0.0	
TR3	11.500		206.15	6.357			147.294	0.0015	0.222	Vel = 2.08
TR3	11.500		0.0	6	S	40.235	8.500	120	30.218	
to					B	12.573	90.528		3.681	
BR3	3		206.15	6.357	T	37.72	99.028	0.0015	0.149	Vel = 2.08
BR3	3		0.0	6	X	31.433	4.000	120	34.048	
to							31.433		0.0	
BR1	3		206.15	6.357			35.433	0.0015	0.054	Vel = 2.08
BR1	3		0.0	6			2.000	120	34.102	
to									0.866	
BASR	1		206.15	6.357			2.000	0.0015	0.003	Vel = 2.08
BASR	1		0.0	8	Zai	0.0	91.000	150	34.971	
to					T	52.855	200.850		13.136	* * Fixed Loss = 11.404
U2	-3		206.15	7.98	2G	12.081	291.850	0.0003	0.096	Vel = 1.32

Node1 to Node2	Elev1 Elev2	K Fact	Qa Qt	Nom Act	Fitting or Eqiv	Len	Pipe Ftngs Total	CFact Pf/Ft	Pt Pe Pf	******* Notes ******
					5E	135.913				
U2	-3		0.0	8	G	6.041	16.000	150	48.203	
to							6.040		0.0	
HYD	-3		206.15	7.98			22.040	0.0003	0.007	Vel = 1.32
HYD	-3	H100	100.00	8	G	6.326	142.000	140	48.210	
to							6.326		0.0	
U1	-3		306.15	8.27			148.326	0.0007	0.097	Vel = 1.83
U1	-3		0.0	8	2G	12.652	352.000	140	48.307	
to					T	55.354	68.006		0.0	
TEST	-3		306.15	8.27			420.006	0.0007	0.275	Vel = 1.83
			0.0							
TEST			306.15						48.582	K Factor = 43.92

Hydraulic Calculations by HydraCALC

Phoenix Fire Protection
2863 Lee Avenue
Sanford, NC 27332
919-774-3042

Larry D Taylor
Nicet Level IV_Cert. No. 112126

Job Name	:	FLATWOODS MIDDLE SCHOOL
Drawing	:	FP-12
Location	:	LILLINGTON, NC
Remote Area	:	5
Contract	:	C05-25
Data File	:	Flatwoods Middle School Area 5.WXF

HYDRAULIC CALCULATIONS
for

JOB NAME FLATWOODS MIDDLE SCHOOL
Location LILLINGTON, NC
Drawing # FP-12
Contract # C05-25
Date 11-11-2025

DESIGN
Remote area # 5
Remote area location 500/600 SECOND FLOOR
Occupancy classification LIGHT
Density 0.10 - Gpm/SqFt
Area of application 1309 - SqFt
Coverage/sprinkler 400 - SqFt
Type of sprinkler calculated K-11.2
 # Sprinklers calculated 6
In-rack demand N/A - GPM
Hose streams 100 - GPM
Total water required (including hose streams) 351.15 - GPM @ 68.6891 - Psi
Type of system WET
Volume of system (dry or pre-action) N/A - Gal

WATER SUPPLY INFORMATION
Test date 07-17-2025
Location SITE HYDRANT
Source of info HARNETT COUNTY

CONTRACTOR INFO Phoenix Fire Protection
Address 2863 Lee Avenue / Sanford, NC 27332
Phone # 919-774-3042
Name of designer KM
Authority having jurisdiction HARNETT COUNTY
NOTES:
Revised 11-11-2025

text1(35) - invisible

Water Supply Curve

Phoenix Fire Protection
FLATWOODS MIDDLE SCHOOL

Date 11-11-2025

City Water Supply:
- C1 - Static Pressure : 88
- C2 - Residual Pressure: 73
- C2 - Residual Flow : 1119

Demand:
- D1 - Elevation : 13.426
- D2 - System Flow : 251.15
- D2 - System Pressure : 68.689
- Hose (Demand) : 100
- D3 - System Demand : 351.15
- Safety Margin : 17.553

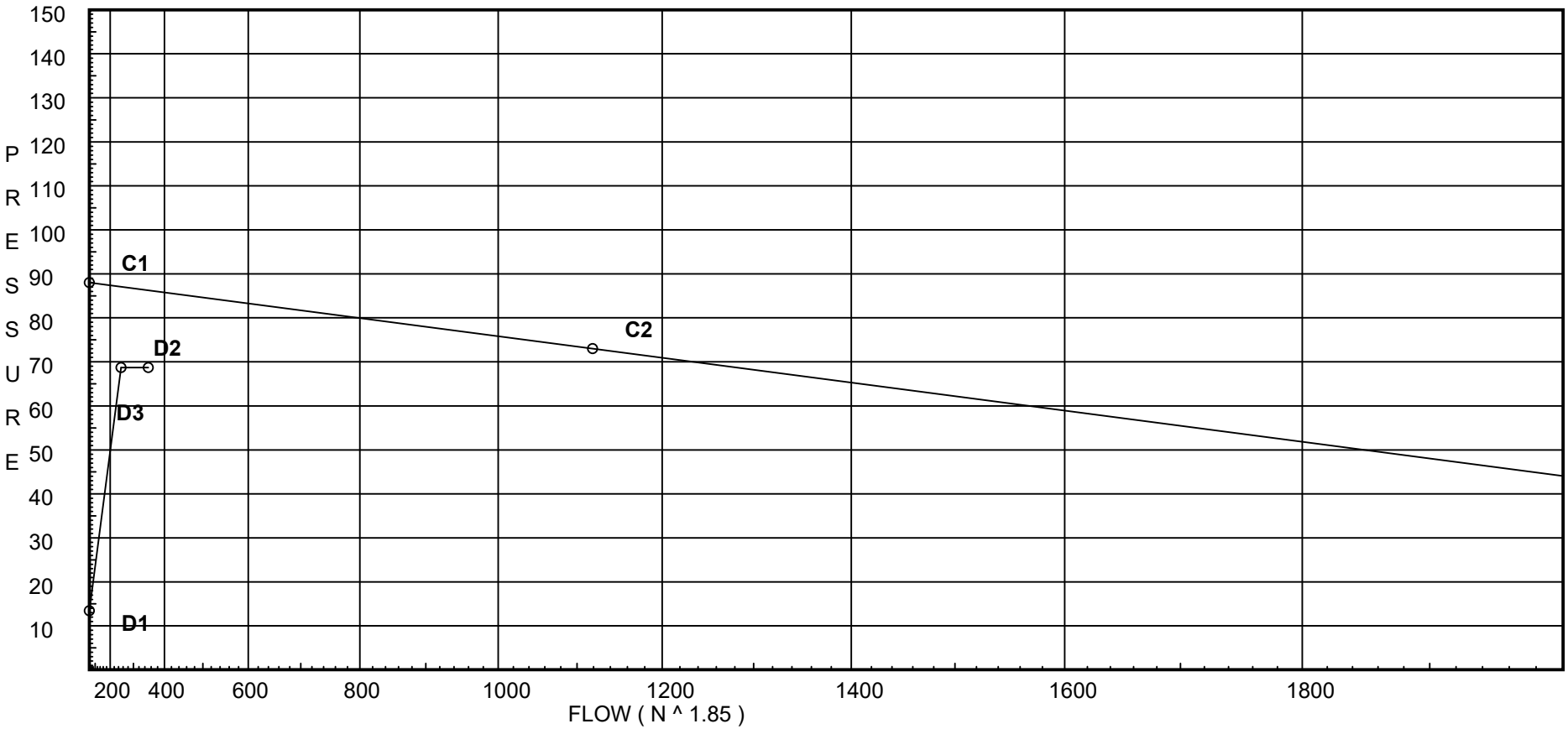

```
     40.1
53 ← 54

     41.6
59 ← 60

     40.3
61 ← 62

     41.8
63 ← 64

     43.6
65 ← 66

     43.7
69 ← 70

     40.1
54 ← 55

     41.6
60 ← 55
     ↑
     |  81.7
     |
     40.3
62 ← 56

     41.8
64 ← 56

     43.6
66 ← 67
     ↑
     |  43.6
     |
     43.7
70 ← 68

     81.7          163.8
55 ← 56 ← 57 ← 58
          163.8    ↑
          ↑        |
          |        163.8  251.2
          |        251.2
     43.6                 251.2          251.2          251.2          351.2          351.2
67 ← 68 ← 58 ← 901 ← 902 ← 903 ← 904 ← TR1 ← BR1 ← BASR ← U2 ← HYD ← U1 ← TEST
          87.3           251.2          251.2          251.2          351.2          351.2
```

Fittings Used Summary

Fitting Legend

Abbrev.	Name	½	¾	1	1¼	1½	2	2½	3	3½	4	5	6	8	10	12	14	16	18	20	24
B	NFPA 13 Butterfly Valve	0	0	0	0	0	6	7	10	0	12	9	10	12	19	21	0	0	0	0	0
E	NFPA 13 90' Standard Elbow	0	2	2	3	4	5	6	7	8	10	12	14	18	22	27	35	40	45	50	61
G	NFPA 13 Gate Valve	0	0	0	0	0	1	1	1	1	2	2	3	4	5	6	7	8	10	11	13
S	NFPA 13 Swing Check	0	0	5	7	9	11	14	16	19	22	27	32	45	55	65					
T	NFPA 13 90' Flow thru Tee	3	4	5	6	8	10	12	15	17	20	25	30	35	50	60	71	81	91	101	121
V	Vic 90' Firelock Ell #001	0	0	0	2.00	2.63	3.5	4.4	5	0	6.88	8.5	10	13	17	20	0	0	0	0	0
X	Vic 90' Firelock Tee #002 Branch	0	0	0	7.5	6.63	8.5	10.9	13	0	16	21	25	33	41	50	0	0	0	0	0
Zai	Ames 4000SS	Fitting generates a Fixed Loss Based on Flow																			

Units Summary

Diameter Units	Inches
Length Units	Feet
Flow Units	US Gallons per Minute
Pressure Units	Pounds per Square Inch

Note: Fitting Legend provides equivalent pipe lengths for fittings types of various diameters. Equivalent lengths shown are standard for actual diameters of Sched 40 pipe and CFactors of 120 except as noted with *. The fittings marked with a * show equivalent lengths values supplied by manufacturers based on specific pipe diameters and CFactors and they require no adjustment. All values for fittings not marked with a * will be adjusted in the calculation for CFactors of other than 120 and diameters other than Sched 40 per NFPA.

SUPPLY ANALYSIS

Node at Source	Static Pressure	Residual Pressure	Flow	Available Pressure	Total Demand	Required Pressure
TEST	88.0	73	1119.0	86.242	351.15	68.689

NODE ANALYSIS

Node Tag	Elevation	Node Type	Pressure at Node	Discharge at Node	Notes	
53	28.0	11.2	12.8	40.07	1.0	1
59	28.0	11.2	13.78	41.58	1.0	1
61	28.0	11.2	12.96	40.32	1.0	1
63	28.0	11.2	13.96	41.84	1.0	1
65	28.0	11.2	15.17	43.63	1.0	1
69	28.0	11.2	15.23	43.7	1.0	1
54	29.0		23.66			
60	29.0		25.45			
62	29.0		23.95			
64	29.0		25.76			
66	29.0		27.96			
70	29.0		28.06			
55	29.0		29.88			
56	29.0		30.24			
57	27.0		34.58			
67	29.0		32.71			
68	29.0		32.82			
58	27.0		34.77			
901	27.0		38.97			
902	35.0		37.73			
903	11.833		48.25			
904	11.833		49.26			
TR1	11.833		50.52			
BR1	3.0		54.48			
BASR	1.0		55.35	100.0		
U2	-3.0		68.19			
HYD	-3.0		68.21			
U1	-3.0		68.34			
TEST	-3.0		68.69			

Node1 to Node2	Elev1 Elev2	K Fact	Qa Qt	Nom Act	Fitting or Eqiv	Len	Pipe Ftngs Total	CFact Pf/Ft	Pt Pe Pf	******* Notes ******
53	28	11.20	40.07	1	E	2.0	1.000	120	12.800	
to					Eql	21.0	23.000		-0.433	
54	29		40.07	1.049			24.000	0.4706	11.295	Vel = 14.88
			0.0							
54			40.07						23.662	K Factor = 8.24
59	28	11.20	41.58	1	E	2.0	1.000	120	13.785	
to					Eql	21.0	23.000		-0.433	
60	29		41.58	1.049			24.000	0.5040	12.097	Vel = 15.44
			0.0							
60			41.58						25.449	K Factor = 8.24
61	28	11.20	40.32	1	E	2.0	1.000	120	12.961	
to					Eql	21.0	23.000		-0.433	
62	29		40.32	1.049			24.000	0.4761	11.427	Vel = 14.97
			0.0							
62			40.32						23.955	K Factor = 8.24
63	28	11.20	41.84	1	E	2.0	1.000	120	13.958	
to					Eql	21.0	23.000		-0.433	
64	29		41.84	1.049			24.000	0.5099	12.237	Vel = 15.53
			0.0							
64			41.84						25.762	K Factor = 8.24
65	28	11.20	43.63	1	E	2.0	1.000	120	15.172	
to					Eql	21.0	23.000		-0.433	
66	29		43.63	1.049			24.000	0.5508	13.220	Vel = 16.20
			0.0							
66			43.63						27.959	K Factor = 8.25
69	28	11.20	43.70	1	E	2.0	1.000	120	15.227	
to					Eql	21.0	23.000		-0.433	
70	29		43.7	1.049			24.000	0.5527	13.264	Vel = 16.22
			0.0							
70			43.70						28.058	K Factor = 8.25
54	29		40.07	1	T	5.0	8.210	120	23.662	
to							5.000		0.0	
55	29		40.07	1.049			13.210	0.4707	6.218	Vel = 14.88
			0.0							
55			40.07						29.880	K Factor = 7.33
60	29		41.58	1	T	5.0	3.790	120	25.449	
to							5.000		0.0	
55	29		41.58	1.049			8.790	0.5041	4.431	Vel = 15.44
			0.0							
55			41.58						29.880	K Factor = 7.61
62	29		40.32	1	T	5.0	8.210	120	23.955	
to							5.000		0.0	
56	29		40.32	1.049			13.210	0.4761	6.289	Vel = 14.97
			0.0							
56			40.32						30.244	K Factor = 7.33
64	29		41.84	1	T	5.0	3.790	120	25.762	
to							5.000		0.0	
56	29		41.84	1.049			8.790	0.5099	4.482	Vel = 15.53

Final Calculations : Hazen-Williams

Node1 to Node2	Elev1 Elev2	K Fact	Qa Qt	Nom Act	Fitting or Eqiv	Len	Pipe Ftngs Total	CFact Pf/Ft	Pt Pe Pf	******* Notes ******
			0.0							
56			41.84						30.244	K Factor = 7.61
66	29		43.63	1	T	5.0	3.625	120	27.959	
to							5.000		0.0	
67	29		43.63	1.049			8.625	0.5508	4.751	Vel = 16.20
			0.0							
67			43.63						32.710	K Factor = 7.63
70	29		43.70	1	T	5.0	3.625	120	28.058	
to							5.000		0.0	
68	29		43.7	1.049			8.625	0.5526	4.766	Vel = 16.22
			0.0							
68			43.70						32.824	K Factor = 7.63
55	29		81.65	2.5			18.420	120	29.880	
to									0.0	
56	29		81.65	2.635			18.420	0.0198	0.364	Vel = 4.80
56	29		82.17	2.5	2V	12.081	19.710	120	30.244	
to					T	16.474	28.555		0.866	
57	27		163.82	2.635			48.265	0.0718	3.465	Vel = 9.64
57	27		0.0	4			28.500	120	34.575	
to									0.0	
58	27		163.82	4.26			28.500	0.0069	0.197	Vel = 3.69
			0.0							
58			163.82						34.772	K Factor = 27.78
67	29		43.63	2.5			18.420	120	32.710	
to									0.0	
68	29		43.63	2.635			18.420	0.0062	0.114	Vel = 2.57
68	29		43.70	2.5	2V	12.081	19.710	120	32.824	
to					T	16.474	28.555		0.866	
58	27		87.33	2.635			48.265	0.0224	1.082	Vel = 5.14
58	27		163.82	4	V	9.059	266.330	120	34.772	
to							9.059		0.0	
901	27		251.15	4.26			275.389	0.0153	4.200	Vel = 5.65
901	27		0.0	4	3V	27.177	118.500	120	38.972	
to							27.177		-3.465	
902	35		251.15	4.26			145.677	0.0153	2.222	Vel = 5.65
902	35		0.0	4	V	9.059	23.170	120	37.729	
to							9.059		10.034	
903	11.833		251.15	4.26			32.229	0.0153	0.492	Vel = 5.65
903	11.833		0.0	4	V	9.059	57.000	120	48.255	
to							9.059		0.0	
904	11.833		251.15	4.26			66.059	0.0152	1.007	Vel = 5.65
904	11.833		0.0	4	2V	18.118	43.333	120	49.262	
to					X	21.067	39.185		0.0	
TR1	11.833		251.15	4.26			82.518	0.0153	1.259	Vel = 5.65
TR1	11.833		0.0	6	S	40.235	8.833	120	50.521	
to					B	12.573	52.808		3.826	
BR1	3		251.15	6.357			61.641	0.0022	0.133	Vel = 2.54
BR1	3		0.0	6			2.000	120	54.480	
to									0.866	
BASR	1		251.15	6.357			2.000	0.0020	0.004	Vel = 2.54

Final Calculations : Hazen-Williams

Node1 to Node2	Elev1 Elev2	K Fact	Qa Qt	Nom Act	Fitting or Eqiv	Len	Pipe Ftngs Total	CFact Pf/Ft	Pt Pe Pf	******* Notes ******
BASR	1	H100	100.00	8	Zai	0.0	91.000	150	55.350	
to					T	52.855	200.850		12.583	* * Fixed Loss = 10.85
U2	-3		351.15	7.98	2G	12.081	291.850	0.0009	0.258	Vel = 2.25
					5E	135.913				
U2	-3		0.0	8	G	6.041	16.000	150	68.191	
to							6.040		0.0	
HYD	-3		351.15	7.98			22.040	0.0009	0.019	Vel = 2.25
HYD	-3		0.0	8	G	6.326	142.000	140	68.210	
to							6.326		0.0	
U1	-3		351.15	8.27			148.326	0.0008	0.125	Vel = 2.10
U1	-3		0.0	8	2G	12.652	352.000	140	68.335	
to					T	55.354	68.006		0.0	
TEST	-3		351.15	8.27			420.006	0.0008	0.354	Vel = 2.10
			0.0							
TEST			351.15						68.689	K Factor = 42.37

Hydraulic Calculations by HydraCALC

Phoenix Fire Protection
2863 Lee Avenue
Sanford, NC 27332
919-774-3042

Larry D Taylor

Nicet Level IV_Cert. No. 112126

Job Name	:	FLATWOODS MIDDLE SCHOOL
Drawing	:	FP-9
Location	:	LILLINGTON, NC
Remote Area	:	6
Contract	:	C05-25
Data File	:	Flatwoods Middle School Area 6.WXF

HYDRAULIC CALCULATIONS
for

JOB NAME FLATWOODS MIDDLE SCHOOL
Location LILLINGTON, NC
Drawing # FP-9
Contract # C05-25
Date 11-11-2025

DESIGN
Remote area # 6
Remote area location 200 MECHANICAL PLATFORM
Occupancy classification OH-I
Density 0.15 - Gpm/SqFt
Area of application 1500 - SqFt
Coverage/sprinkler 130 - SqFt
Type of sprinkler calculated K 5.6
 # Sprinklers calculated 13
In-rack demand N/A - GPM
Hose streams 250 - GPM
Total water required (including hose streams) 520.075 - GPM @ 66.1763 - Psi
Type of system WET
Volume of system (dry or pre-action) N/A - Gal

WATER SUPPLY INFORMATION
Test date 07-17-2025
Location SITE HYDRANT
Source of info HARNETT COUNTY

CONTRACTOR INFO Phoenix Fire Protection
Address 2863 Lee Avenue / Sanford, NC 27332
Phone # 919-774-3042
Name of designer KM
Authority having jurisdiction HARNETT COUNTY
NOTES:
Revised 11-11-2025

text1(35) - invisible

Water Supply Curve

Phoenix Fire Protection
FLATWOODS MIDDLE SCHOOL

Date 11-11-2025

City Water Supply:
- C1 - Static Pressure : 88
- C2 - Residual Pressure: 73
- C2 - Residual Flow : 1119

Demand:
- D1 - Elevation : 10.918
- D2 - System Flow : 270.075
- D2 - System Pressure : 66.176
- Hose (Demand) : 250
- D3 - System Demand : 520.075
- Safety Margin : 18.189

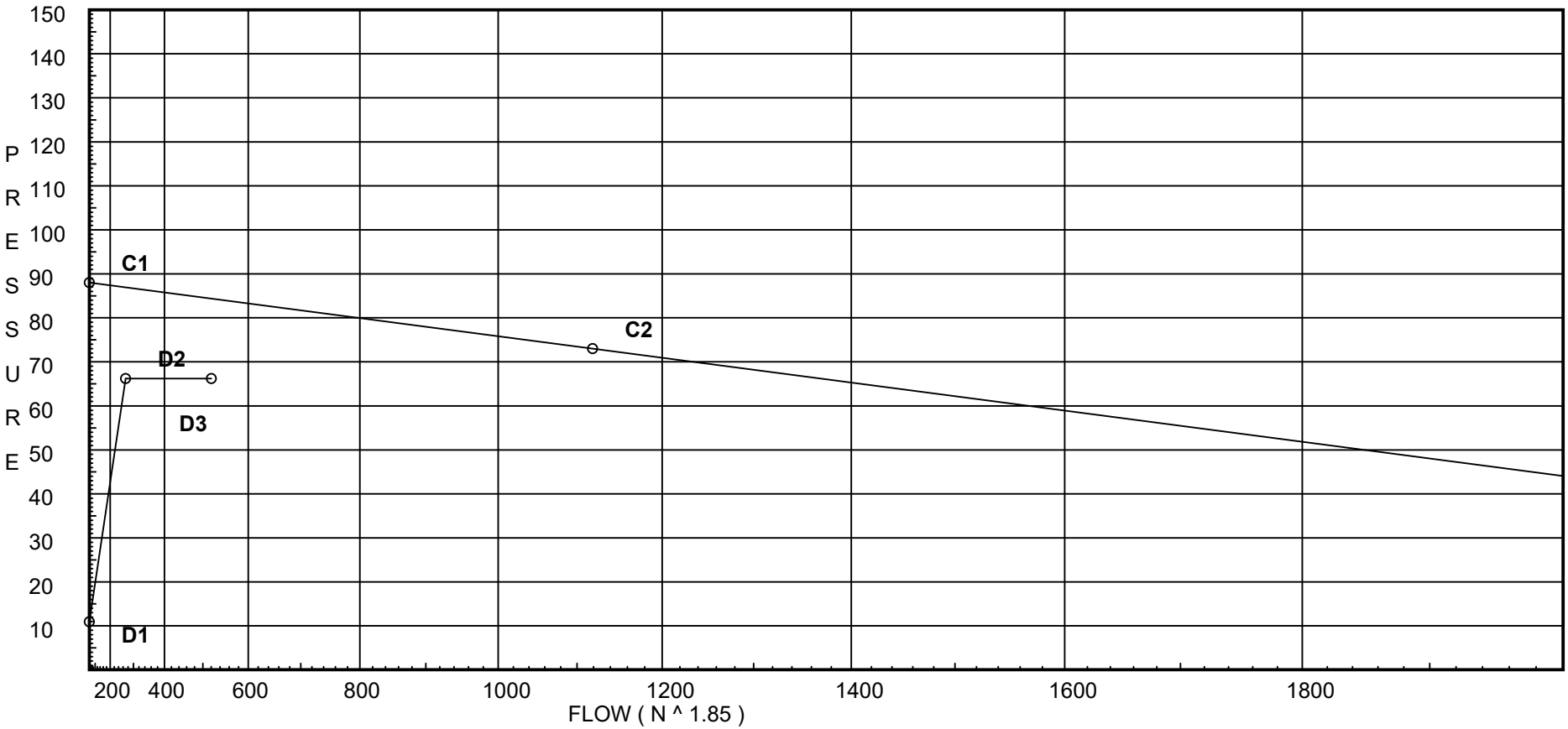

```
     14.2            32.6
124 → 125 ← 126 ← 139
            9.2

     33.4            7.1             47.9
127 → 128 → 129 ← 130 ← 131 ← 138
            13.1            27.4        |
                                        |    46.5
     31.8            7.3             46.5↓
132 → 133 → 134 ← 135 ← 136 ← 137
↑       ↑   12.2            26.8
|    51.6   31.8
|    51.6
142 → 132
↑
|    51.6
|    54
143 → 127
↑
|    105.5
|    37.6
144 → 124


     46.5            127             127             127
137 ← 138 ← 139 ← 140 ← 141 ← 147 ← 148 ← 149 ← 150
            94.4            127             127             127

     51.6            143.1           143.1           270.1           270.1           270.1           370.1           520.1
142 ← 143 ← 144 ← 145 ← 146 ← 150 ← 151 ← 152 ← 153 ← TR2 ← BR2 ← BR1 ← BASR ← U2 ← HYD ← U1 ← TEST
            105.5           143.1           270.1           270.1           270.1           270.1           370.1           520.1
```

Fittings Used Summary

Fitting Legend

Abbrev.	Name	½	¾	1	1¼	1½	2	2½	3	3½	4	5	6	8	10	12	14	16	18	20	24
B	NFPA 13 Butterfly Valve	0	0	0	0	0	6	7	10	0	12	9	10	12	19	21	0	0	0	0	0
E	NFPA 13 90' Standard Elbow	0	2	2	3	4	5	6	7	8	10	12	14	18	22	27	35	40	45	50	61
G	NFPA 13 Gate Valve	0	0	0	0	0	1	1	1	1	2	2	3	4	5	6	7	8	10	11	13
S	NFPA 13 Swing Check	0	0	5	7	9	11	14	16	19	22	27	32	45	55	65					
T	NFPA 13 90' Flow thru Tee	3	4	5	6	8	10	12	15	17	20	25	30	35	50	60	71	81	91	101	121
V	Vic 90' Firelock Ell #001	0	0	0	2.00	2.63	3.5	4.4	5	0	6.88	8.5	10	13	17	20	0	0	0	0	0
X	Vic 90' Firelock Tee #002 Branch	0	0	0	7.5	6.63	8.5	10.9	13	0	16	21	25	33	41	50	0	0	0	0	0
Zai	Ames 4000SS	Fitting generates a Fixed Loss Based on Flow																			

Units Summary

Diameter Units	Inches
Length Units	Feet
Flow Units	US Gallons per Minute
Pressure Units	Pounds per Square Inch

Note: Fitting Legend provides equivalent pipe lengths for fittings types of various diameters. Equivalent lengths shown are standard for actual diameters of Sched 40 pipe and CFactors of 120 except as noted with *. The fittings marked with a * show equivalent lengths values supplied by manufacturers based on specific pipe diameters and CFactors and they require no adjustment. All values for fittings not marked with a * will be adjusted in the calculation for CFactors of other than 120 and diameters other than Sched 40 per NFPA.

SUPPLY ANALYSIS

Node at Source	Static Pressure	Residual Pressure	Flow	Available Pressure	Total Demand	Required Pressure
TEST	88.0	73	1119.0	84.365	520.08	66.176

NODE ANALYSIS

Node Tag	Elevation	Node Type	Pressure at Node	Discharge at Node	Notes	
124	20.42	5.6	17.48	23.42	0.15	130
125	20.42	5.6	17.42	23.37	0.15	130
126	20.42	5.6	17.45	23.39	0.15	130
127	21.25	5.6	13.48	20.56	0.15	130
128	21.25	5.6	13.14	20.3	0.15	130
129	21.25	5.6	13.07	20.25	0.15	130
130	21.25	5.6	13.09	20.26	0.15	130
131	21.25	5.6	13.35	20.46	0.15	130
132	22.21	5.6	12.49	19.79	0.15	130
133	22.21	5.6	12.18	19.55	0.15	130
134	22.21	5.6	12.13	19.5	0.15	130
135	22.21	5.6	12.15	19.52	0.15	130
136	22.21	5.6	12.39	19.71	0.15	130
142	20.79		15.91			
143	19.875		17.12			
144	19.0		20.56			
137	20.79		15.34			
138	19.875		16.41			
139	19.0		19.28			
140	18.5		24.78			
141	11.0		32.31			
147	11.0		38.52			
148	11.0		38.67			
149	30.0		30.82			
145	18.5		27.37			
146	12.0		38.35			
150	30.0		31.05			
151	13.08		42.6			
152	12.17		44.8			
153	12.17		45.7			
TR2	12.17		46.03			
BR2	3.0		51.42			
BR1	3.0		51.5			
BASR	1.0		52.37	100.0		
U2	-3.0		65.16			
HYD	-3.0		65.19	150.0		
U1	-3.0		65.44			
TEST	-3.0		66.18			

Node1 to Node2	Elev1 Elev2	K Fact	Qa Qt	Nom Act	Fitting or Eqiv	Len	Pipe Ftngs Total	CFact Pf/Ft	Pt Pe Pf	******* Notes ******
124	20.420	5.60	-14.18	1.5			10.000	120	17.485	
to									0.0	
125	20.420		-14.18	1.682			10.000	-0.0069	-0.069	Vel = 2.05
125	20.420	5.60	23.37	1.5			11.000	120	17.416	
to									0.0	
126	20.420		9.19	1.682			11.000	0.0031	0.034	Vel = 1.33
126	20.420	5.60	23.39	1.5	X	8.204	19.500	120	17.450	
to					T	9.9	18.104		0.615	
139	19		32.58	1.682			37.604	0.0322	1.211	Vel = 4.70
			0.0							
139			32.58						19.276	K Factor = 7.42
127	21.250	5.60	-33.40	1.5			10.000	120	13.477	
to									0.0	
128	21.250		-33.4	1.682			10.000	-0.0337	-0.337	Vel = 4.82
128	21.250	5.60	20.30	1.5			11.330	120	13.140	
to									0.0	
129	21.250		-13.1	1.682			11.330	-0.0060	-0.068	Vel = 1.89
129	21.250	5.60	20.25	1.5			10.000	120	13.072	
to									0.0	
130	21.250		7.15	1.682			10.000	0.0019	0.019	Vel = 1.03
130	21.250	5.60	20.26	1.5			11.000	120	13.091	
to									0.0	
131	21.250		27.41	1.682			11.000	0.0235	0.258	Vel = 3.96
131	21.250	5.60	20.46	1.5	X	8.204	19.500	120	13.349	
to					T	9.9	18.104		0.596	
138	19.875		47.87	1.682			37.604	0.0656	2.467	Vel = 6.91
			0.0							
138			47.87						16.412	K Factor = 11.82
132	22.210	5.60	-31.78	1.5			10.000	120	12.492	
to									0.0	
133	22.210		-31.78	1.682			10.000	-0.0307	-0.307	Vel = 4.59
133	22.210	5.60	19.55	1.5			11.330	120	12.185	
to									0.0	
134	22.210		-12.23	1.682			11.330	-0.0053	-0.060	Vel = 1.77
134	22.210	5.60	19.50	1.5			10.000	120	12.125	
to									0.0	
135	22.210		7.27	1.682			10.000	0.0020	0.020	Vel = 1.05
135	22.210	5.60	19.51	1.5			11.000	120	12.145	
to									0.0	
136	22.210		26.78	1.682			11.000	0.0225	0.247	Vel = 3.87
136	22.210	5.60	19.71	1.5	X	8.204	19.500	120	12.392	
to					T	9.9	18.104		0.615	
137	20.790		46.49	1.682			37.604	0.0622	2.338	Vel = 6.71
			0.0							
137			46.49						15.345	K Factor = 11.87
142	20.790		-51.58	1.5	X	8.204	19.170	120	15.915	
to					T	9.9	18.104		-0.615	
132	22.210		-51.58	1.682			37.274	-0.0753	-2.808	Vel = 7.45

Node1 to Node2	Elev1 Elev2	K Fact	Qa Qt	Nom Act	Fitting or Eqiv	Len	Pipe Ftngs Total	CFact Pf/Ft	Pt Pe Pf	******* Notes ******
			0.0							
132			-51.58						12.492	K Factor = -14.59
143	19.875		-53.95	1.5	X	8.204	19.170	120	17.124	
to					T	9.9	18.104		-0.596	
127	21.250		-53.95	1.682			37.274	-0.0819	-3.051	Vel = 7.79
			0.0							
127			-53.95						13.477	K Factor = -14.70
144	19		-37.59	1.5	X	8.204	40.500	120	20.559	
to					T	9.9	18.104		-0.615	
124	20.420		-37.59	1.682			58.604	-0.0420	-2.459	Vel = 5.43
			0.0							
124			-37.59						17.485	K Factor = -8.99
137	20.790		46.49	1.5			10.790	120	15.345	
to									0.396	
138	19.875		46.49	1.682			10.790	0.0622	0.671	Vel = 6.71
138	19.875		47.88	1.5			10.790	120	16.412	
to									0.379	
139	19		94.37	1.682			10.790	0.2303	2.485	Vel = 13.63
139	19		32.58	1.5	2V	6.509	6.750	120	19.276	
to							6.509		0.217	
140	18.500		126.95	1.682			13.259	0.3986	5.285	Vel = 18.33
140	18.500		0.0	1.5	V	3.255	7.500	120	24.778	
to							3.255		3.248	
141	11		126.95	1.682			10.755	0.3987	4.288	Vel = 18.33
141	11		0.0	1.5	T	9.9	5.670	120	32.314	
to							9.900		0.0	
147	11		126.95	1.682			15.570	0.3987	6.207	Vel = 18.33
147	11		0.0	4	V	9.059	25.000	120	38.521	
to							9.059		0.0	
148	11		126.95	4.26			34.059	0.0043	0.147	Vel = 2.86
148	11		0.0	4	2V	18.118	48.000	120	38.668	
to					X	21.067	39.185		-8.229	
149	30		126.95	4.26			87.185	0.0043	0.377	Vel = 2.86
149	30		0.0	4			53.500	120	30.816	
to									0.0	
150	30		126.95	4.26			53.500	0.0043	0.231	Vel = 2.86
			0.0							
150			126.95						31.047	K Factor = 22.78
142	20.790		51.58	1.5			10.790	120	15.915	
to									0.396	
143	19.875		51.58	1.682			10.790	0.0753	0.813	Vel = 7.45
143	19.875		53.95	1.5			10.790	120	17.124	
to									0.379	
144	19		105.53	1.682			10.790	0.2832	3.056	Vel = 15.24
144	19		37.59	1.5	2V	6.509	6.750	120	20.559	
to							6.509		0.217	
145	18.500		143.12	1.682			13.259	0.4976	6.598	Vel = 20.67
145	18.500		0.0	1.5	T	9.9	6.500	120	27.374	
to							9.900		2.815	
146	12		143.12	1.682			16.400	0.4977	8.162	Vel = 20.67

Final Calculations : Hazen-Williams

Node1 to Node2	Elev1 Elev2	K Fact	Qa Qt	Nom Act	Fitting or Eqiv	Len	Pipe Ftngs Total	CFact Pf/Ft	Pt Pe Pf	******* Notes ******
146	12		0.0	4	2V	18.118	52.000	120	38.351	
to					X	21.067	39.185		-7.796	
150	30		143.12	4.26			91.185	0.0054	0.492	Vel = 3.22
			0.0							
150			143.12						31.047	K Factor = 25.69
150	30		270.08	4	V	9.059	207.000	120	31.047	
to					T	26.334	35.393		7.328	
151	13.080		270.08	4.26			242.393	0.0174	4.228	Vel = 6.08
151	13.080		0.0	4	4V	36.236	67.000	120	42.603	
to							36.236		0.394	
152	12.170		270.08	4.26			103.236	0.0174	1.801	Vel = 6.08
152	12.170		0.0	4	V	9.059	42.500	120	44.798	
to							9.059		0.0	
153	12.170		270.08	4.26			51.559	0.0175	0.900	Vel = 6.08
153	12.170		0.0	4	V	9.059	9.710	120	45.698	
to							9.059		0.0	
TR2	12.170		270.08	4.26			18.769	0.0174	0.327	Vel = 6.08
TR2	12.170		0.0	4	S	28.968	10.250	120	46.025	
to					B	15.8	71.102		3.972	
BR2	3		270.08	4.26	T	26.334	81.352	0.0174	1.419	Vel = 6.08
BR2	3		0.0	6	X	31.433	2.000	120	51.416	
to							31.433		0.0	
BR1	3		270.08	6.357			33.433	0.0025	0.083	Vel = 2.73
BR1	3		0.0	6			2.000	120	51.499	
to									0.866	
BASR	1		270.08	6.357			2.000	0.0025	0.005	Vel = 2.73
BASR	1	H100	100.00	8	Zai	0.0	91.000	150	52.370	
to					T	52.855	200.850		12.510	* * Fixed Loss = 10.778
U2	-3		370.08	7.98	2G	12.081	291.850	0.0010	0.284	Vel = 2.37
					5E	135.913				
U2	-3		0.0	8	G	6.041	16.000	150	65.164	
to							6.040		0.0	
HYD	-3		370.08	7.98			22.040	0.0010	0.022	Vel = 2.37
HYD	-3	H150	150.00	8	G	6.326	142.000	140	65.186	
to							6.326		0.0	
U1	-3		520.08	8.27			148.326	0.0017	0.258	Vel = 3.11
U1	-3		0.0	8	2G	12.652	352.000	140	65.444	
to					T	55.354	68.006		0.0	
TEST	-3		520.08	8.27			420.006	0.0017	0.732	Vel = 3.11
			0.0							
TEST			520.08						66.176	K Factor = 63.93

Hydraulic Calculations by HydraCALC

Phoenix Fire Protection
2863 Lee Avenue
Sanford, NC 27332
919-774-3042

Larry D Taylor
Nicet Level IV_Cert. No. 112126

Job Name	:	FLATWOODS MIDDLE SCHOOL
Drawing	:	FP-6
Location	:	LILLINGTON, NC
Remote Area	:	7
Contract	:	C05-25
Data File	:	Flatwoods Middle School Area 7.WXF

HYDRAULIC CALCULATIONS
for

JOB NAME FLATWOODS MIDDLE SCHOOL
Location LILLINGTON, NC
Drawing # FP-6
Contract # C05-25
Date 11-11-2025

DESIGN
Remote area # 7
Remote area location 400 FIRST FLOOR
Occupancy classification LIGHT
Density .10 - Gpm/SqFt
Area of application 1300 - SqFt
Coverage/sprinkler 400 - SqFt
Type of sprinkler calculated K 11.2
 # Sprinklers calculated 6
In-rack demand N/A - GPM
Hose streams 100 - GPM
Total water required (including hose streams) 348.292 - GPM @ 63.0999 - Psi
Type of system WET
Volume of system (dry or pre-action) N/A - Gal

WATER SUPPLY INFORMATION
Test date 07-17-2025
Location SITE HYDRANT
Source of info HARNETT COUNTY

CONTRACTOR INFO Phoenix Fire Protection
Address 2863 Lee Avenue / Sanford, NC 27332
Phone # 919-774-3042
Name of designer KM
Authority having jurisdiction HARNETT COUNTY
NOTES:
Revised 11-11-2025

text1(35) - invisible

City Water Supply:
- C1 - Static Pressure : 88
- C2 - Residual Pressure: 73
- C2 - Residual Flow : 1119

Demand:
- D1 - Elevation : 6.496
- D2 - System Flow : 248.292
- D2 - System Pressure : 63.100
- Hose (Demand) : 100
- D3 - System Demand : 348.292
- Safety Margin : 23.169

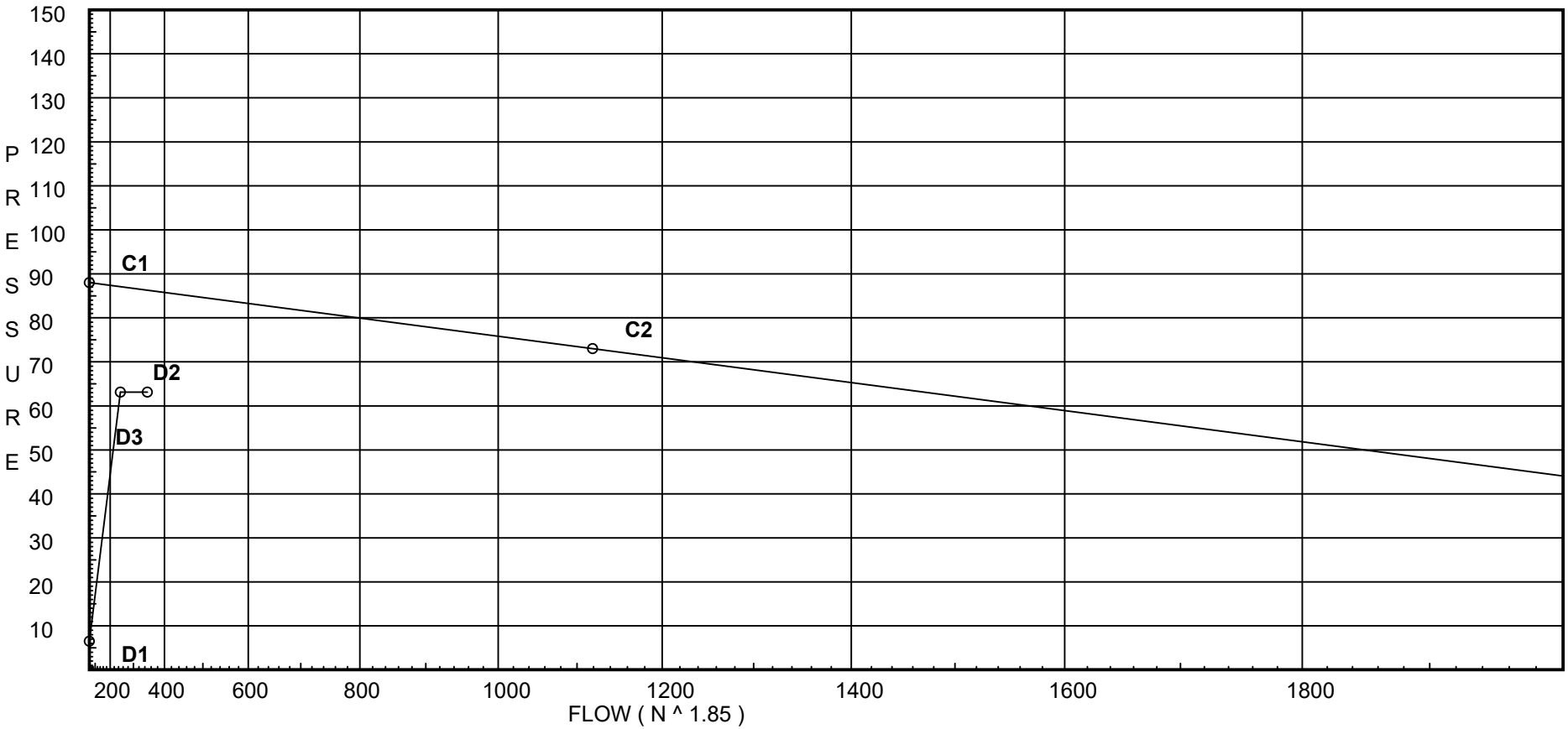

```
     40.1
71 ← 72
     ↑
     |  40.1
     |
     40.7
73 ← 74


     42.6
75 ← 76


     40.6
77 ← 78
     ↑
     |  40.6
     |
     41.2
79 ← 80


     43.2
81 ← 82


     40.1
72 ← 74 ← 83
     ↑   80.8
     |   80.8   123.4
     |
     42.6
76 ← 83
     |
     |
     |
     |
     40.6
78 ← 80 ← 84
     ↑   81.7
     |   81.7   248.3
     |
     43.2
82 ← 84
     |
     |
     |
     123.4
83 ← 84 ← 85 ← 86 ← 912 ← 913 ← 914 ← 915 ← 916 ← 917 ← 918 ← TR3 ← BR3 ← BR1 ← BASR ← U2 ← HYD ← U1 ← TEST
     248.3   248.3   248.3   248.3   248.3   248.3   248.3   248.3   248.3   248.3   248.3   248.3   248.3   248.3   248.3   248.3   248.3
```

Fittings Used Summary

Fitting Legend

Abbrev.	Name	½	¾	1	1¼	1½	2	2½	3	3½	4	5	6	8	10	12	14	16	18	20	24
B	NFPA 13 Butterfly Valve	0	0	0	0	0	6	7	10	0	12	9	10	12	19	21	0	0	0	0	0
E	NFPA 13 90' Standard Elbow	0	2	2	3	4	5	6	7	8	10	12	14	18	22	27	35	40	45	50	61
G	NFPA 13 Gate Valve	0	0	0	0	0	1	1	1	1	2	2	3	4	5	6	7	8	10	11	13
S	NFPA 13 Swing Check	0	0	5	7	9	11	14	16	19	22	27	32	45	55	65					
T	NFPA 13 90' Flow thru Tee	3	4	5	6	8	10	12	15	17	20	25	30	35	50	60	71	81	91	101	121
V	Vic 90' Firelock Ell #001	0	0	0	2.00	2.63	3.5	4.4	5	0	6.88	8.5	10	13	17	20	0	0	0	0	0
X	Vic 90' Firelock Tee #002 Branch	0	0	0	7.5	6.63	8.5	10.9	13	0	16	21	25	33	41	50	0	0	0	0	0
Zai	Ames 4000SS	Fitting generates a Fixed Loss Based on Flow																			

Units Summary

Diameter Units	Inches
Length Units	Feet
Flow Units	US Gallons per Minute
Pressure Units	Pounds per Square Inch

Note: Fitting Legend provides equivalent pipe lengths for fittings types of various diameters. Equivalent lengths shown are standard for actual diameters of Sched 40 pipe and CFactors of 120 except as noted with *. The fittings marked with a * show equivalent lengths values supplied by manufacturers based on specific pipe diameters and CFactors and they require no adjustment. All values for fittings not marked with a * will be adjusted in the calculation for CFactors of other than 120 and diameters other than Sched 40 per NFPA.

SUPPLY ANALYSIS

Node at Source	Static Pressure	Residual Pressure	Flow	Available Pressure	Total Demand	Required Pressure
TEST	88.0	73	1119.0	86.269	348.29	63.1

NODE ANALYSIS

Node Tag	Elevation	Node Type	Pressure at Node	Discharge at Node	Notes	
71	12.0	11.2	12.8	40.07	1.0	1
73	12.0	11.2	13.19	40.68	1.0	1
75	12.0	11.2	14.49	42.64	1.0	1
77	12.0	11.2	13.12	40.56	1.0	1
79	12.0	11.2	13.52	41.18	1.0	1
81	12.0	11.2	14.85	43.16	1.0	1
72	13.0		25.07			
74	13.0		25.83			
76	13.0		28.31			
78	13.0		25.68			
80	13.0		26.45			
82	13.0		28.99			
83	13.0		28.88			
84	13.0		29.58			
85	11.0		37.39			
86	11.0		41.7			
912	11.0		42.6			
913	13.0		42.59			
914	15.67		41.9			
915	29.0		36.18			
916	29.0		36.47			
917	34.67		34.49			
918	11.5		44.61			
TR3	11.5		44.92			
BR3	3.0		48.82			
BR1	3.0		48.89			
BASR	1.0		49.76	100.0		
U2	-3.0		62.61			
HYD	-3.0		62.63			
U1	-3.0		62.75			
TEST	-3.0		63.1			

Node1 to Node2	Elev1 Elev2	K Fact	Qa Qt	Nom Act	Fitting or Eqiv	Len	Pipe Ftngs Total	CFact Pf/Ft	Pt Pe Pf	******* Notes ******
71	12	11.20	40.07	1	T	5.0	1.000	120	12.800	
to					Eql	21.0	26.000		-0.433	
72	13		40.07	1.049			27.000	0.4706	12.707	Vel = 14.88
			0.0							
72			40.07						25.074	K Factor = 8.00
73	12	11.20	40.68	1	T	5.0	1.000	120	13.194	
to					Eql	21.0	26.000		-0.433	
74	13		40.68	1.049			27.000	0.4840	13.069	Vel = 15.10
			0.0							
74			40.68						25.830	K Factor = 8.00
75	12	11.20	42.64	1	T	5.0	1.000	120	14.492	
to					Eql	21.0	26.000		-0.433	
76	13		42.64	1.049			27.000	0.5279	14.254	Vel = 15.83
			0.0							
76			42.64						28.313	K Factor = 8.01
77	12	11.20	40.56	1	T	5.0	1.000	120	13.116	
to					Eql	21.0	26.000		-0.433	
78	13		40.56	1.049			27.000	0.4814	12.998	Vel = 15.06
			0.0							
78			40.56						25.681	K Factor = 8.00
79	12	11.20	41.18	1	T	5.0	1.000	120	13.520	
to					Eql	21.0	26.000		-0.433	
80	13		41.18	1.049			27.000	0.4951	13.367	Vel = 15.29
			0.0							
80			41.18						26.454	K Factor = 8.01
81	12	11.20	43.16	1	T	5.0	1.000	120	14.849	
to					Eql	21.0	26.000		-0.433	
82	13		43.16	1.049			27.000	0.5399	14.578	Vel = 16.02
			0.0							
82			43.16						28.994	K Factor = 8.02
72	13		40.07	1.5			16.000	120	25.074	
to									0.0	
74	13		40.07	1.682			16.000	0.0472	0.756	Vel = 5.79
74	13		40.68	1.5	T	9.9	7.790	120	25.830	
to							9.900		0.0	
83	13		80.75	1.682			17.690	0.1726	3.054	Vel = 11.66
			0.0							
83			80.75						28.884	K Factor = 15.02
76	13		42.64	1.5	T	9.9	0.875	120	28.313	
to							9.900		0.0	
83	13		42.64	1.682			10.775	0.0530	0.571	Vel = 6.16
			0.0							
83			42.64						28.884	K Factor = 7.93
78	13		40.56	1.5			16.000	120	25.681	
to									0.0	
80	13		40.56	1.682			16.000	0.0483	0.773	Vel = 5.86
80	13		41.18	1.5	T	9.9	7.790	120	26.454	
to							9.900		0.0	
84	13		81.74	1.682			17.690	0.1766	3.124	Vel = 11.80

Node1 to Node2	Elev1 Elev2	K Fact	Qa Qt	Nom Act	Fitting or Eqiv	Len	Pipe Ftngs Total	CFact Pf/Ft	Pt Pe Pf	******* Notes ******
			0.0							
84			81.74						29.578	K Factor = 15.03
82	13		43.16	1.5	T	9.9	0.875	120	28.994	
to							9.900		0.0	
84	13		43.16	1.682			10.775	0.0542	0.584	Vel = 6.23
			0.0							
84			43.16						29.578	K Factor = 7.94
83	13		123.39	2.5			16.330	120	28.884	
to									0.0	
84	13		123.39	2.635			16.330	0.0425	0.694	Vel = 7.26
84	13		124.90	2.5	2V	12.081	16.250	120	29.578	
to					T	16.474	28.555		0.866	
85	11		248.29	2.635			44.805	0.1549	6.942	Vel = 14.61
85	11		0.0	4	V	9.059	280.000	120	37.386	
to							9.059		0.0	
86	11		248.29	4.26			289.059	0.0149	4.316	Vel = 5.59
86	11		0.0	4	2V	18.118	42.000	120	41.702	
to							18.118		0.0	
912	11		248.29	4.26			60.118	0.0149	0.897	Vel = 5.59
912	11		0.0	4	2V	18.118	13.083	120	42.599	
to					T	26.334	44.452		-0.866	
913	13		248.29	4.26			57.535	0.0149	0.859	Vel = 5.59
913	13		0.0	6	8V	100.587	118.417	120	42.592	
to							100.587		-1.156	
914	15.670		248.29	6.357			219.004	0.0021	0.465	Vel = 2.51
914	15.670		0.0	6	V	12.573	13.333	120	41.901	
to							12.573		-5.773	
915	29		248.29	6.357			25.906	0.0021	0.055	Vel = 2.51
915	29		0.0	6	V	12.573	120.250	120	36.183	
to							12.573		0.0	
916	29		248.29	6.357			132.823	0.0021	0.283	Vel = 2.51
916	29		0.0	6	4V	50.294	142.000	120	36.466	
to					X	31.433	81.727		-2.456	
917	34.670		248.29	6.357			223.727	0.0021	0.476	Vel = 2.51
917	34.670		0.0	6	2V	25.147	17.500	120	34.486	
to							25.147		10.035	
918	11.500		248.29	6.357			42.647	0.0021	0.090	Vel = 2.51
918	11.500		0.0	6	4V	50.294	97.000	120	44.611	
to							50.294		0.0	
TR3	11.500		248.29	6.357			147.294	0.0021	0.313	Vel = 2.51
TR3	11.500		0.0	6	S	40.235	8.500	120	44.924	
to					B	12.573	90.528		3.681	
BR3	3		248.29	6.357	T	37.72	99.028	0.0021	0.211	Vel = 2.51
BR3	3		0.0	6	X	31.433	4.000	120	48.816	
to							31.433		0.0	
BR1	3		248.29	6.357			35.433	0.0021	0.075	Vel = 2.51
BR1	3		0.0	6			2.000	120	48.891	
to									0.866	
BASR	1		248.29	6.357			2.000	0.0025	0.005	Vel = 2.51

Final Calculations : Hazen-Williams

Node1 to Node2	Elev1 Elev2	K Fact	Qa Qt	Nom Act	Fitting or Eqiv	Len	Pipe Ftngs Total	CFact Pf/Ft	Pt Pe Pf	******* Notes ******
BASR	1	H100	100.00	8	Zai	0.0	91.000	150	49.762	
to					T	52.855	200.850		12.594	* * Fixed Loss = 10.861
U2	-3		348.29	7.98	2G	12.081	291.850	0.0009	0.253	Vel = 2.23
					5E	135.913				
U2	-3		0.0	8	G	6.041	16.000	150	62.609	
to							6.040		0.0	
HYD	-3		348.29	7.98			22.040	0.0009	0.019	Vel = 2.23
HYD	-3		0.0	8	G	6.326	142.000	140	62.628	
to							6.326		0.0	
U1	-3		348.29	8.27			148.326	0.0008	0.123	Vel = 2.08
U1	-3		0.0	8	2G	12.652	352.000	140	62.751	
to					T	55.354	68.006		0.0	
TEST	-3		348.29	8.27			420.006	0.0008	0.349	Vel = 2.08
			0.0							
TEST			348.29						63.100	K Factor = 43.85

Hydraulic Calculations by HydraCALC

Phoenix Fire Protection
2863 Lee Avenue
Sanford, NC 27332
919-774-3042

Larry D Taylor

Nicet Level IV_Cert. No. 112126

Job Name	:	FLATWOODS MIDDLE SCHOOL
Drawing	:	FP-10
Location	:	LILLINGTON, NC
Remote Area	:	8
Contract	:	C05-25
Data File	:	Flatwoods Middle School Area 8.WXF

HYDRAULIC CALCULATIONS
for

JOB NAME FLATWOODS MIDDLE SCHOOL
Location LILLINGTON, NC
Drawing # FP-10
Contract # C05-25
Date 11-11-2025

DESIGN
Remote area # 8
Remote area location 300 GYM
Occupancy classification LIGHT
Density 0.10 - Gpm/SqFt
Area of application 1500 - SqFt
Coverage/sprinkler 225 - SqFt
Type of sprinkler calculated k-5.6
 # Sprinklers calculated 11
In-rack demand N/A - GPM
Hose streams 100 - GPM
Total water required (including hose streams) 364.081 - GPM @ 66.6586 - Psi
Type of system WET
Volume of system (dry or pre-action) N/A - Gal

WATER SUPPLY INFORMATION
Test date 07-17-2025
Location SITE HYDRANT
Source of info HARNETT COUNTY

CONTRACTOR INFO Phoenix Fire Protection
Address 2863 Lee Avenue / Sanford, NC 27332
Phone # 919-774-3042
Name of designer KM
Authority having jurisdiction HARNETT COUNTY
NOTES:
Revised 11-11-2025

text1(35) - invisible

City Water Supply:
- C1 - Static Pressure : 88
- C2 - Residual Pressure: 73
- C2 - Residual Flow : 1119

Demand:
- D1 - Elevation : 17.467
- D2 - System Flow : 264.081
- D2 - System Pressure : 66.659
- Hose (Demand) : 100
- D3 - System Demand : 364.081
- Safety Margin : 19.462

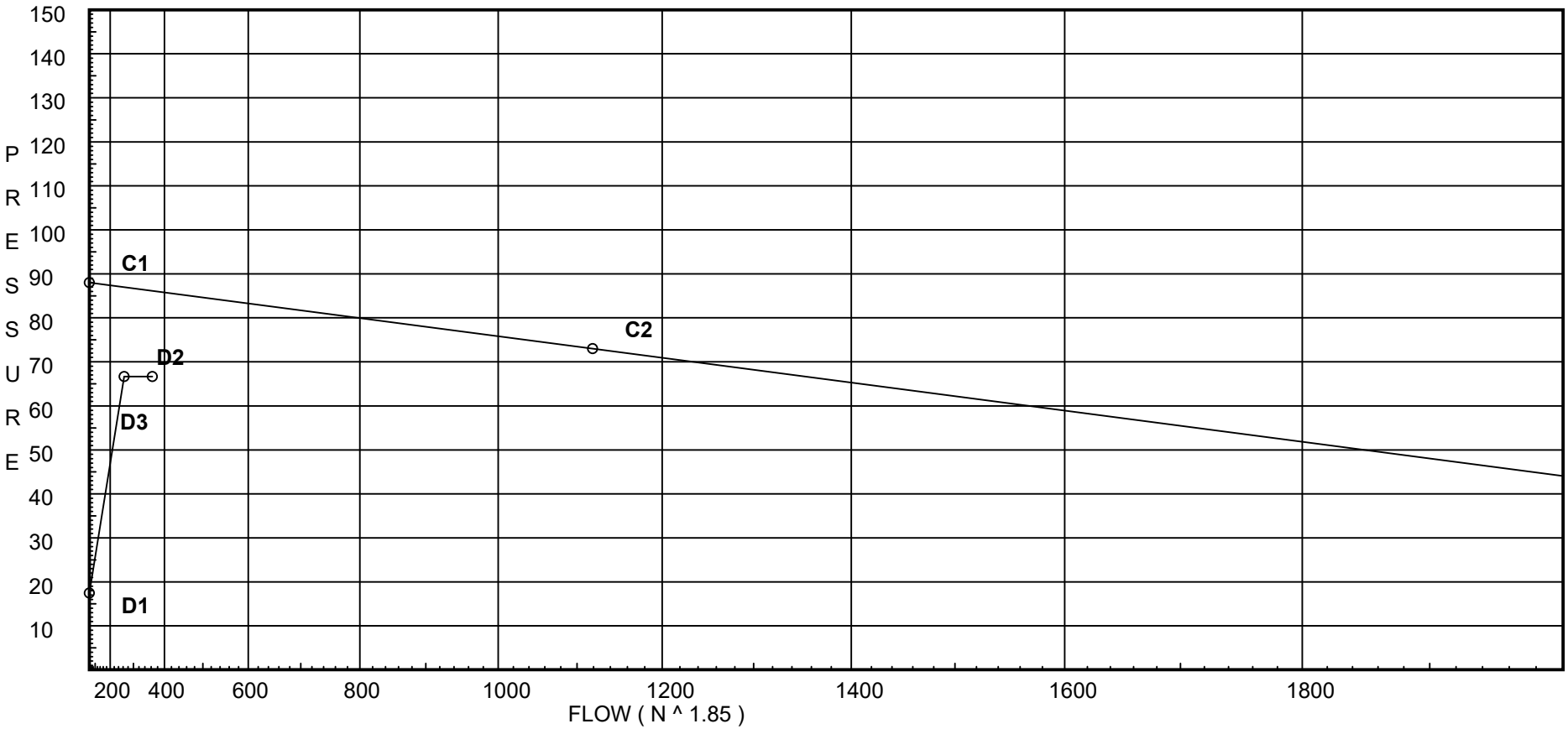

```
     22.5          68.4
87 ← 88  ← 89  ← 90  ← 91
             45.2          92.7↑
                             |   92.7
     22.5          68.4      |
92 ← 93  ← 94  ← 90  ← 96
             45.2          92.8

     25.9          78.6
97 ← 98  ← 99  ← 100
             51.9↑   ↑
                 |   78.6  264.1
     92.7        |   264.1
91 ← 96  ← 100 ← 902 ← 903 ← 904 ← TR1 ← BR1 ← BASR ← U2 ← HYD ← U1 ← TEST
             185.5         264.1       264.1       264.1       264.1       264.1       264.1       264.1
```

Fittings Used Summary

Fitting Legend

Abbrev.	Name	½	¾	1	1¼	1½	2	2½	3	3½	4	5	6	8	10	12	14	16	18	20	24
B	NFPA 13 Butterfly Valve	0	0	0	0	0	6	7	10	0	12	9	10	12	19	21	0	0	0	0	0
E	NFPA 13 90' Standard Elbow	0	2	2	3	4	5	6	7	8	10	12	14	18	22	27	35	40	45	50	61
G	NFPA 13 Gate Valve	0	0	0	0	0	1	1	1	1	2	2	3	4	5	6	7	8	10	11	13
S	NFPA 13 Swing Check	0	0	5	7	9	11	14	16	19	22	27	32	45	55	65					
T	NFPA 13 90' Flow thru Tee	3	4	5	6	8	10	12	15	17	20	25	30	35	50	60	71	81	91	101	121
V	Vic 90' Firelock Ell #001	0	0	0	2.00	2.63	3.5	4.4	5	0	6.88	8.5	10	13	17	20	0	0	0	0	0
X	Vic 90' Firelock Tee #002 Branch	0	0	0	7.5	6.63	8.5	10.9	13	0	16	21	25	33	41	50	0	0	0	0	0
Zai	Ames 4000SS	Fitting generates a Fixed Loss Based on Flow																			

Units Summary

Diameter Units	Inches
Length Units	Feet
Flow Units	US Gallons per Minute
Pressure Units	Pounds per Square Inch

Note: Fitting Legend provides equivalent pipe lengths for fittings types of various diameters. Equivalent lengths shown are standard for actual diameters of Sched 40 pipe and CFactors of 120 except as noted with *. The fittings marked with a * show equivalent lengths values supplied by manufacturers based on specific pipe diameters and CFactors and they require no adjustment. All values for fittings not marked with a * will be adjusted in the calculation for CFactors of other than 120 and diameters other than Sched 40 per NFPA.

SUPPLY ANALYSIS

Node at Source	Static Pressure	Residual Pressure	Flow	Available Pressure	Total Demand	Required Pressure
TEST	88.0	73	1119.0	86.121	364.08	66.659

NODE ANALYSIS

Node Tag	Elevation	Node Type	Pressure at Node	Discharge at Node	Notes	
87	37.33	5.6	16.14	22.5	0.1	225
88	37.33	5.6	16.37	22.66	0.1	225
89	37.33	5.6	17.18	23.21	0.1	225
90	37.33	5.6	18.92	24.36	0.1	225
92	37.33	5.6	16.16	22.51	0.1	225
93	37.33	5.6	16.38	22.66	0.1	225
94	37.33	5.6	17.19	23.22	0.1	225
95	37.33	5.6	18.94	24.37	0.1	225
97	37.33	5.6	21.35	25.88	0.1	225
98	37.33	5.6	21.64	26.05	0.1	225
99	37.33	5.6	22.69	26.67	0.1	225
91	35.0		33.79			
96	35.0		33.81			
100	35.0		33.9			
902	35.0		35.41			
903	11.833		45.99			
904	11.833		47.09			
TR1	11.833		48.47			
BR1	3.0		52.45			
BASR	1.0		53.32	100.0		
U2	-3.0		66.13			
HYD	-3.0		66.15			
U1	-3.0		66.28			
TEST	-3.0		66.66			

Node1 to Node2	Elev1 Elev2	K Fact	Qa Qt	Nom Act	Fitting or Eqiv	Len	Pipe Ftngs Total	CFact Pf/Ft	Pt Pe Pf	******* Notes ******
87	37.330	5.60	22.50	1.5			13.750	120	16.143	
to									0.0	
88	37.330		22.5	1.682			13.750	0.0162	0.223	Vel = 3.25
88	37.330	5.60	22.66	1.5			13.750	120	16.366	
to									0.0	
89	37.330		45.16	1.682			13.750	0.0589	0.810	Vel = 6.52
89	37.330	5.60	23.20	1.5			13.750	120	17.176	
to									0.0	
90	37.330		68.36	1.682			13.750	0.1268	1.744	Vel = 9.87
90	37.330	5.60	24.36	1.5	V	3.255	49.000	120	18.920	
to					T	9.9	13.155		1.009	
91	35		92.72	1.682			62.155	0.2229	13.857	Vel = 13.39
			0.0							
91			92.72						33.786	K Factor = 15.95
92	37.330	5.60	22.51	1.5			13.750	120	16.156	
to									0.0	
93	37.330		22.51	1.682			13.750	0.0163	0.224	Vel = 3.25
93	37.330	5.60	22.66	1.5			13.750	120	16.380	
to									0.0	
94	37.330		45.17	1.682			13.750	0.0589	0.810	Vel = 6.52
94	37.330	5.60	23.22	1.5			13.750	120	17.190	
to									0.0	
95	37.330		68.39	1.682			13.750	0.1270	1.746	Vel = 9.87
95	37.330	5.60	24.37	1.5	V	3.255	49.000	120	18.936	
to					T	9.9	13.155		1.009	
96	35		92.76	1.682			62.155	0.2231	13.866	Vel = 13.39
			0.0							
96			92.76						33.811	K Factor = 15.95
97	37.330	5.60	25.88	1.5			13.750	120	21.350	
to									0.0	
98	37.330		25.88	1.682			13.750	0.0210	0.289	Vel = 3.74
98	37.330	5.60	26.04	1.5			13.750	120	21.639	
to									0.0	
99	37.330		51.92	1.682			13.750	0.0762	1.048	Vel = 7.50
99	37.330	5.60	26.68	1.5	V	3.255	49.000	120	22.687	
to					T	9.9	13.155		1.009	
100	35		78.6	1.682			62.155	0.1642	10.207	Vel = 11.35
			0.0							
100			78.60						33.903	K Factor = 13.50
91	35		92.72	4			10.540	120	33.786	
to									0.0	
96	35		92.72	4.26			10.540	0.0024	0.025	Vel = 2.09
96	35		92.76	4			10.500	120	33.811	
to									0.0	
100	35		185.48	4.26			10.500	0.0088	0.092	Vel = 4.18
100	35		78.60	4	V	9.059	81.250	120	33.903	
to							9.059		0.0	
902	35		264.08	4.26			90.309	0.0167	1.511	Vel = 5.94

Node1 to Node2	Elev1 Elev2	K Fact	Qa Qt	Nom Act	Fitting or Eqiv	Len	Pipe Ftngs Total	CFact Pf/Ft	Pt Pe Pf	******* Notes ******
902	35		0.0	4	V	9.059	23.170	120	35.414	
to							9.059		10.034	
903	11.833		264.08	4.26			32.229	0.0167	0.539	Vel = 5.94
903	11.833		0.0	4	V	9.059	57.000	120	45.987	
to							9.059		0.0	
904	11.833		264.08	4.26			66.059	0.0167	1.106	Vel = 5.94
904	11.833		0.0	4	2V	18.118	43.333	120	47.093	
to					X	21.067	39.185		0.0	
TR1	11.833		264.08	4.26			82.518	0.0167	1.381	Vel = 5.94
TR1	11.833		0.0	6	S	40.235	8.833	120	48.474	
to					B	12.573	52.808		3.826	
BR1	3		264.08	6.357			61.641	0.0024	0.146	Vel = 2.67
BR1	3		0.0	6			2.000	120	52.446	
to									0.866	
BASR	1		264.08	6.357			2.000	0.0025	0.005	Vel = 2.67
BASR	1	H100	100.00	8	Zai	0.0	91.000	150	53.317	
to					T	52.855	200.850		12.533	* * Fixed Loss = 10.801
U2	-3		364.08	7.98	2G	12.081	291.850	0.0009	0.276	Vel = 2.34
					5E	135.913				
U2	-3		0.0	8	G	6.041	16.000	150	66.126	
to							6.040		0.0	
HYD	-3		364.08	7.98			22.040	0.0009	0.020	Vel = 2.34
HYD	-3		0.0	8	G	6.326	142.000	140	66.146	
to							6.326		0.0	
U1	-3		364.08	8.27			148.326	0.0009	0.134	Vel = 2.17
U1	-3		0.0	8	2G	12.652	352.000	140	66.280	
to					T	55.354	68.006		0.0	
TEST	-3		364.08	8.27			420.006	0.0009	0.379	Vel = 2.17
			0.0							
TEST			364.08						66.659	K Factor = 44.59

Hydraulic Calculations by HydraCALC

Phoenix Fire Protection
2863 Lee Avenue
Sanford, NC 27332
919-774-3042

Larry D Taylor
Nicet Level IV_Cert. No. 112126

Job Name	:	FLATWOODS MIDDLE SCHOOL
Drawing	:	FP-7
Location	:	LILLINGTON, NC
Remote Area	:	9
Contract	:	C05-25
Data File	:	Flatwoods Middle School Area 9.WXF

HYDRAULIC CALCULATIONS
for

JOB NAME FLATWOODS MIDDLE SCHOOL
Location LILLINGTON, NC
Drawing # FP-7
Contract # C05-25
Date 11-11-2025

DESIGN
Remote area # 9
Remote area location 500/600 FIRST FLOOR
Occupancy classification LIGHT
Density 0.10 - Gpm/SqFt
Area of application 1372 - SqFt
Coverage/sprinkler 400 - SqFt
Type of sprinkler calculated K-11.2
 # Sprinklers calculated 6
In-rack demand N/A - GPM
Hose streams 100 - GPM
Total water required (including hose streams) 357.854 - GPM @ 66.42 - Psi
Type of system WET
Volume of system (dry or pre-action) N/A - Gal

WATER SUPPLY INFORMATION
Test date 07-17-2025
Location SITE HYDRANT
Source of info HARNETT COUNTY

CONTRACTOR INFO Phoenix Fire Protection
Address 2863 Lee Avenue / Sanford, NC 27332
Phone # 919-774-3042
Name of designer KM
Authority having jurisdiction HARNETT COUNTY
NOTES:
Revised 11-11-2025

text1(35) - invisible

City Water Supply:

C1 - Static Pressure	: 88
C2 - Residual Pressure:	73
C2 - Residual Flow	: 1119

Demand:

D1 - Elevation	: 6.496
D2 - System Flow	: 257.854
D2 - System Pressure	: 66.420
Hose (Demand)	: 100
D3 - System Demand	: 357.854
Safety Margin	: 19.760

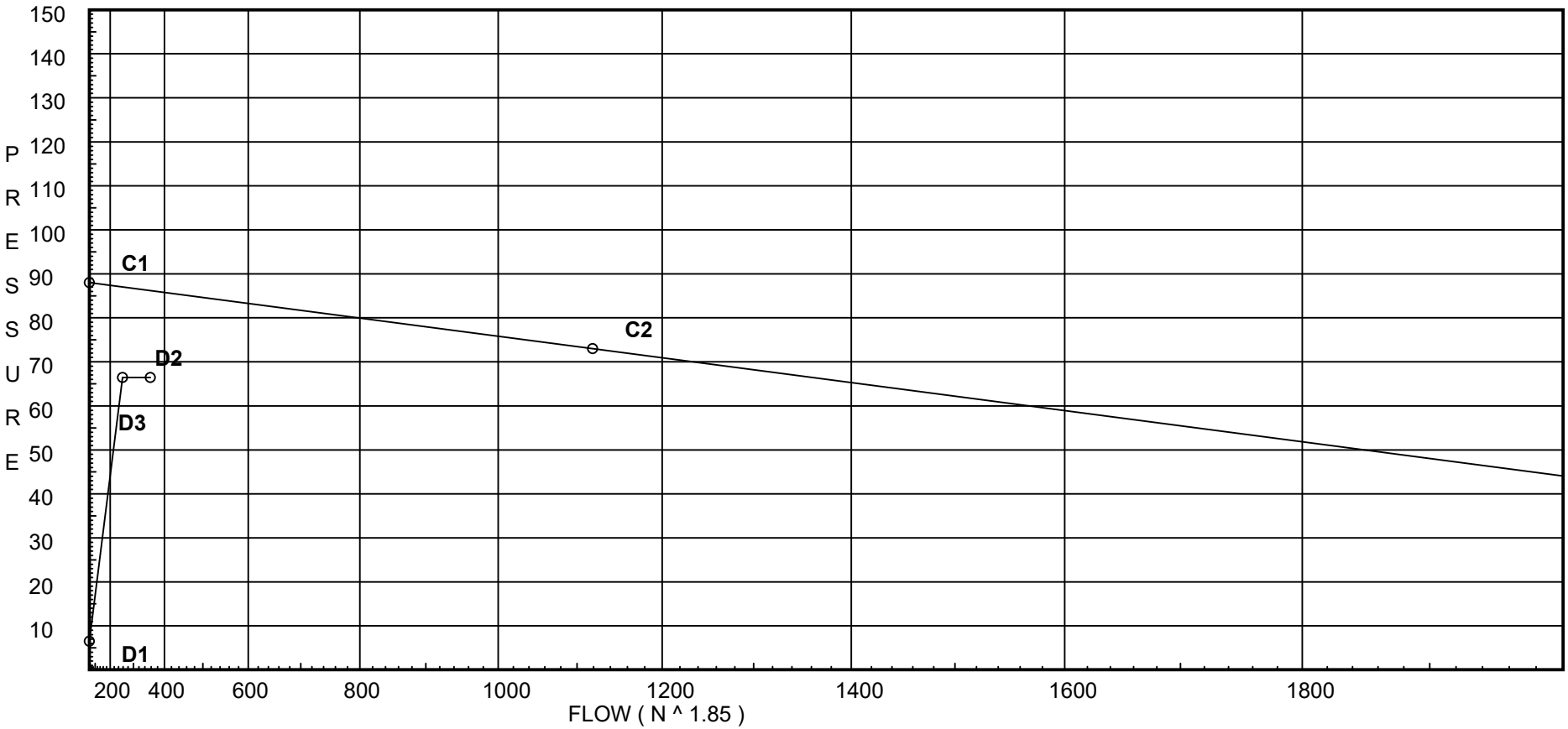

```
     45.8
101 ← 102

     40.1
103 ← 104

     46.1
105 ← 106

     40.3
107 ← 108

     42.8
109 ← 110

     42.8
111 ← 112

     40.1
104 ← 113
       ↑
       |   85.8
     40.3
108 ← 114

     42.8
110 ← 116 ← 117
            42.8
                |   42.8
     42.8       |
112 ← 118 ← 119
            42.8

     45.8            126.2
102 ← 113 ← 114 ← 106 ← 115
            85.8            172.2

     42.8
117 ← 119 ← 120
       ↑    85.6
       |    85.6     257.9
    172.2           |   257.9          257.9          257.9          257.9          357.9          357.9
115 ← 120 ← 121 ← 906 ← 901 ← 902 ← 903 ← 904 ← TR1 ← BR1 ← BASR ← U2 ← HYD ← U1 ← TEST
            257.9          257.9          257.9          257.9          257.9          357.9          357.9
```

Fittings Used Summary

Fitting Legend

Abbrev.	Name	½	¾	1	1¼	1½	2	2½	3	3½	4	5	6	8	10	12	14	16	18	20	24
B	NFPA 13 Butterfly Valve	0	0	0	0	0	6	7	10	0	12	9	10	12	19	21	0	0	0	0	0
E	NFPA 13 90' Standard Elbow	0	2	2	3	4	5	6	7	8	10	12	14	18	22	27	35	40	45	50	61
G	NFPA 13 Gate Valve	0	0	0	0	0	1	1	1	1	2	2	3	4	5	6	7	8	10	11	13
S	NFPA 13 Swing Check	0	0	5	7	9	11	14	16	19	22	27	32	45	55	65					
T	NFPA 13 90' Flow thru Tee	3	4	5	6	8	10	12	15	17	20	25	30	35	50	60	71	81	91	101	121
V	Vic 90' Firelock Ell #001	0	0	0	2.00	2.63	3.5	4.4	5	0	6.88	8.5	10	13	17	20	0	0	0	0	0
X	Vic 90' Firelock Tee #002 Branch	0	0	0	7.5	6.63	8.5	10.9	13	0	16	21	25	33	41	50	0	0	0	0	0
Zai	Ames 4000SS	Fitting generates a Fixed Loss Based on Flow																			

Units Summary

Diameter Units	Inches
Length Units	Feet
Flow Units	US Gallons per Minute
Pressure Units	Pounds per Square Inch

Note: Fitting Legend provides equivalent pipe lengths for fittings types of various diameters. Equivalent lengths shown are standard for actual diameters of Sched 40 pipe and CFactors of 120 except as noted with *. The fittings marked with a * show equivalent lengths values supplied by manufacturers based on specific pipe diameters and CFactors and they require no adjustment. All values for fittings not marked with a * will be adjusted in the calculation for CFactors of other than 120 and diameters other than Sched 40 per NFPA.

SUPPLY ANALYSIS

Node at Source	Static Pressure	Residual Pressure	Flow	Available Pressure	Total Demand	Required Pressure
TEST	88.0	73	1119.0	86.18	357.85	66.42

NODE ANALYSIS

Node Tag	Elevation	Node Type	Pressure at Node	Discharge at Node	Notes	
101	12.0	11.2	16.7	45.77	1.0	1
103	12.0	11.2	12.8	40.07	1.0	1
105	12.0	11.2	16.94	46.09	1.0	1
107	12.0	11.2	12.96	40.32	1.0	1
109	12.0	11.2	14.58	42.77	1.0	1
111	12.0	11.2	14.63	42.84	1.0	1
104	13.0		25.07			
108	13.0		25.38			
110	13.0		28.48			
116	13.0		34.86			
112	13.0		28.57			
118	13.0		34.96			
102	13.0		32.52			
113	13.0		32.52			
114	13.0		32.92			
106	13.0		32.97			
117	13.0		35.83			
119	13.0		35.94			
115	11.0		37.54			
120	11.0		37.85			
121	12.83		41.66			
906	12.83		42.02			
901	27.0		36.45			
902	35.0		35.31			
903	11.833		45.86			
904	11.833		46.92			
TR1	11.833		48.24			
BR1	3.0		52.21			
BASR	1.0		53.08	100.0		
U2	-3.0		65.9			
HYD	-3.0		65.92			
U1	-3.0		66.05			
TEST	-3.0		66.42			

Final Calculations : Hazen-Williams

Node1 to Node2	Elev1 Elev2	K Fact	Qa Qt	Nom Act	Fitting or Eqiv	Len	Pipe Ftngs Total	CFact Pf/Ft	Pt Pe Pf	******* Notes ******
101	12	11.20	45.77	1	T	5.0	1.000	120	16.700	
to					Eql	21.0	26.000		-0.433	
102	13		45.77	1.049			27.000	0.6019	16.251	Vel = 16.99
			0.0							
102			45.77						32.518	K Factor = 8.03
103	12	11.20	40.07	1	T	5.0	1.000	120	12.800	
to					Eql	21.0	26.000		-0.433	
104	13		40.07	1.049			27.000	0.4706	12.707	Vel = 14.88
			0.0							
104			40.07						25.074	K Factor = 8.00
105	12	11.20	46.09	1	T	5.0	1.000	120	16.936	
to					Eql	21.0	26.000		-0.433	
106	13		46.09	1.049			27.000	0.6098	16.465	Vel = 17.11
			0.0							
106			46.09						32.968	K Factor = 8.03
107	12	11.20	40.32	1	T	5.0	1.000	120	12.959	
to					Eql	21.0	26.000		-0.433	
108	13		40.32	1.049			27.000	0.4761	12.854	Vel = 14.97
			0.0							
108			40.32						25.380	K Factor = 8.00
109	12	11.20	42.77	1	T	5.0	1.000	120	14.582	
to					Eql	21.0	26.000		-0.433	
110	13		42.77	1.049			27.000	0.5310	14.336	Vel = 15.88
			0.0							
110			42.77						28.485	K Factor = 8.01
111	12	11.20	42.84	1	T	5.0	1.000	120	14.627	
to					Eql	21.0	26.000		-0.433	
112	13		42.84	1.049			27.000	0.5325	14.378	Vel = 15.90
			0.0							
112			42.84						28.572	K Factor = 8.01
104	13		40.07	1	T	5.0	10.830	120	25.074	
to							5.000		0.0	
113	13		40.07	1.049			15.830	0.4707	7.451	Vel = 14.88
			0.0							
113			40.07						32.525	K Factor = 7.03
108	13		40.32	1	T	5.0	10.830	120	25.380	
to							5.000		0.0	
114	13		40.32	1.049			15.830	0.4761	7.536	Vel = 14.97
			0.0							
114			40.32						32.916	K Factor = 7.03
110	13		42.77	1			12.000	120	28.485	
to									0.0	
116	13		42.77	1.049			12.000	0.5309	6.371	Vel = 15.88
116	13		0.0	1.25	T	6.0	1.000	120	34.856	
to							6.000		0.0	
117	13		42.77	1.38			7.000	0.1397	0.978	Vel = 9.17
			0.0							
117			42.77						35.834	K Factor = 7.14

Node1 to Node2	Elev1 Elev2	K Fact	Qa Qt	Nom Act	Fitting or Eqiv	Len	Pipe Ftngs Total	CFact Pf/Ft	Pt Pe Pf	******* Notes ******
112	13		42.84	1			12.000	120	28.572	
to									0.0	
118	13		42.84	1.049			12.000	0.5324	6.389	Vel = 15.90
118	13		0.0	1.25	T	6.0	1.000	120	34.961	
to							6.000		0.0	
119	13		42.84	1.38			7.000	0.1401	0.981	Vel = 9.19
			0.0							
119			42.84						35.942	K Factor = 7.15
102	13		45.77	2.5			1.000	120	32.518	
to									0.0	
113	13		45.77	2.635			1.000	0.0070	0.007	Vel = 2.69
113	13		40.07	2.5			18.000	120	32.525	
to									0.0	
114	13		85.84	2.635			18.000	0.0217	0.391	Vel = 5.05
114	13		40.32	2.5			1.170	120	32.916	
to									0.0	
106	13		126.16	2.635			1.170	0.0444	0.052	Vel = 7.42
106	13		46.09	2.5	2V	12.081	18.500	120	32.968	
to					T	16.474	28.555		0.866	
115	11		172.25	2.635			47.055	0.0788	3.706	Vel = 10.13
			0.0							
115			172.25						37.540	K Factor = 28.11
117	13		42.77	2.5			18.000	120	35.834	
to									0.0	
119	13		42.77	2.635			18.000	0.0060	0.108	Vel = 2.52
119	13		42.83	2.5	2V	12.081	19.670	120	35.942	
to					T	16.474	28.555		0.866	
120	11		85.6	2.635			48.225	0.0216	1.042	Vel = 5.04
			0.0							
120			85.60						37.850	K Factor = 13.91
115	11		172.25	4			40.790	120	37.540	
to									0.0	
120	11		172.25	4.26			40.790	0.0076	0.310	Vel = 3.88
120	11		85.60	4	4V	36.236	251.000	120	37.850	
to							36.236		-0.793	
121	12.830		257.85	4.26			287.236	0.0160	4.600	Vel = 5.80
121	12.830		0.0	4	V	9.059	13.580	120	41.657	
to							9.059		0.0	
906	12.830		257.85	4.26			22.639	0.0160	0.362	Vel = 5.80
906	12.830		0.0	4	X	21.067	14.170	120	42.019	
to							21.067		-6.137	
901	27		257.85	4.26			35.237	0.0160	0.564	Vel = 5.80
901	27		0.0	4	3V	27.177	118.500	120	36.446	
to							27.177		-3.465	
902	35		257.85	4.26			145.677	0.0160	2.333	Vel = 5.80
902	35		0.0	4	V	9.059	23.170	120	35.314	
to							9.059		10.034	
903	11.833		257.85	4.26			32.229	0.0160	0.516	Vel = 5.80

Node1 to Node2	Elev1 Elev2	K Fact	Qa Qt	Nom Act	Fitting or Eqiv	Len	Pipe Ftngs Total	CFact Pf/Ft	Pt Pe Pf	******* Notes ******
903	11.833		0.0	4	V	9.059	57.000	120	45.864	
to							9.059		0.0	
904	11.833		257.85	4.26			66.059	0.0160	1.058	Vel = 5.80
904	11.833		0.0	4	2V	18.118	43.333	120	46.922	
to					X	21.067	39.185		0.0	
TR1	11.833		257.85	4.26			82.518	0.0160	1.321	Vel = 5.80
TR1	11.833		0.0	6	S	40.235	8.833	120	48.243	
to					B	12.573	52.808		3.826	
BR1	3		257.85	6.357			61.641	0.0023	0.140	Vel = 2.61
BR1	3		0.0	6			2.000	120	52.209	
to									0.866	
BASR	1		257.85	6.357			2.000	0.0025	0.005	Vel = 2.61
BASR	1	H100	100.00	8	Zai	0.0	91.000	150	53.080	
to					T	52.855	200.850		12.557	* * Fixed Loss = 10.825
U2	-3		357.85	7.98	2G	12.081	291.850	0.0009	0.267	Vel = 2.30
					5E	135.913				
U2	-3		0.0	8	G	6.041	16.000	150	65.904	
to							6.040		0.0	
HYD	-3		357.85	7.98			22.040	0.0009	0.020	Vel = 2.30
HYD	-3		0.0	8	G	6.326	142.000	140	65.924	
to							6.326		0.0	
U1	-3		357.85	8.27			148.326	0.0009	0.129	Vel = 2.14
U1	-3		0.0	8	2G	12.652	352.000	140	66.053	
to					T	55.354	68.006		0.0	
TEST	-3		357.85	8.27			420.006	0.0009	0.367	Vel = 2.14
			0.0							
TEST			357.85						66.420	K Factor = 43.91

Hydraulic Calculations by HydraCALC

Phoenix Fire Protection
2863 Lee Avenue
Sanford, NC 27332
919-774-3042

Larry D Taylor

Nicet Level IV_Cert. No. 112126

Job Name	:	FLATWOODS MIDDLE SCHOOL
Drawing	:	FP-8
Location	:	LILLINGTON, NC
Remote Area	:	10
Contract	:	C05-25
Data File	:	Flatwoods Middle School Area 10.WXF

HYDRAULIC CALCULATIONS
for

JOB NAME FLATWOODS MIDDLE SCHOOL
Location LILLINGTON, NC
Drawing # FP-8
Contract # C05-25
Date 11-11-2025

DESIGN
Remote area # 10
Remote area location 100 STAGE
Occupancy classification ORDINARY 2
Density .20 - Gpm/SqFt
Area of application 1500 - SqFt
Coverage/sprinkler 130 - SqFt
Type of sprinkler calculated K 8.0
 # Sprinklers calculated 18
In-rack demand N/A - GPM
Hose streams 250 - GPM
Total water required (including hose streams) 739.58 - GPM @ 69.849 - Psi
Type of system WET
Volume of system (dry or pre-action) N/A - Gal

WATER SUPPLY INFORMATION
Test date 07-17-2025
Location SITE HYDRANT
Source of info HARNETT COUNTY

CONTRACTOR INFO Phoenix Fire Protection
Address 2863 Lee Avenue / Sanford, NC 27332
Phone # 919-774-3042
Name of designer KM
Authority having jurisdiction HARNETT COUNTY
NOTES:
Revised 11-11-2025

text1(35) - invisible

City Water Supply:
- C1 - Static Pressure : 88
- C2 - Residual Pressure: 73
- C2 - Residual Flow : 1119

Demand:
- D1 - Elevation : 15.379
- D2 - System Flow : 489.58
- D2 - System Pressure : 69.849
- Hose (Demand) : 250
- D3 - System Demand : 739.58
- Safety Margin : 11.179

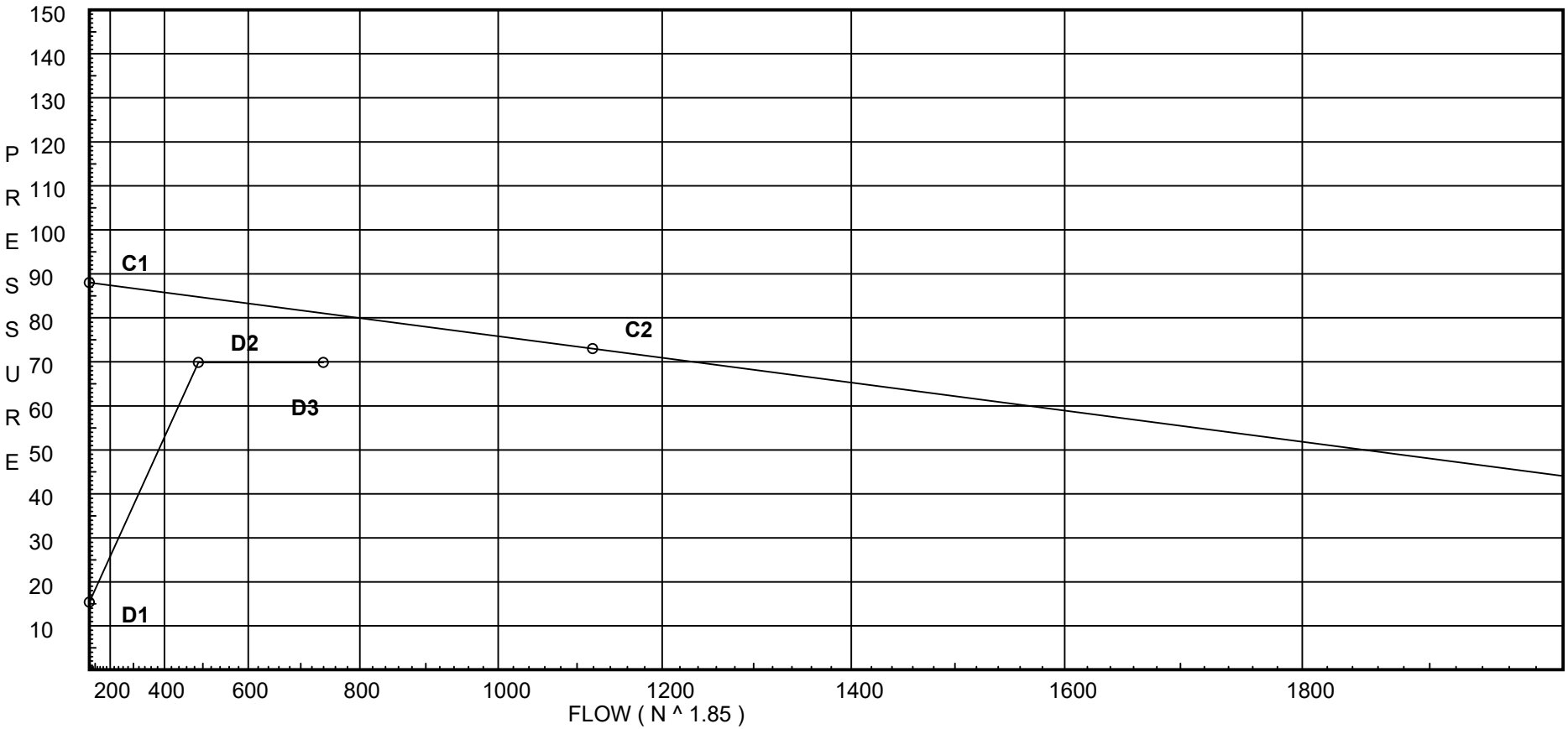

Flow Diagram


```
    27.5
167 ← 168 ← 169
            55.4 ↑
                 |   55.4
    27.5         |
170 ← 171 ← 172
            55.4

    26              79.3
173 ← 174 ← 175 ← 176
            52.2      ↑
                      |   190.1
    26.1            79.5
177 ← 178 ← 179 ← 180
            52.4      ↑
                      |   269.6
    26.4            80.4
181 ← 182 ← 183 ← 184
            53        ↑
                      |   350
    26.6            81.2
185 ← 186 ← 187 ← 188
            53.5

    29
189 ← 190 ← 191
            58.3

    55.4            190.1           350             489.6           489.6           489.6           489.6           489.6           489.6           489.6           489.6           589.6           739.6
169 ← 172 ← 176 ← 180 ← 184 ← 188 ← 191 ← 50  ← 15  ← 910 ← 911 ← 912 ← 913 ← 914 ← 915 ← 916 ← 917 ← 918 ← TR3 ← BR3 ← BR1 ← BASR ← U2  ← HYD ← U1  ← TEST
            110.8           269.6           431.3           489.6           489.6           489.6           489.6           489.6           489.6           489.6           489.6           589.6           739.6
```

Fittings Used Summary

Fitting Legend

Abbrev.	Name	½	¾	1	1¼	1½	2	2½	3	3½	4	5	6	8	10	12	14	16	18	20	24
B	NFPA 13 Butterfly Valve	0	0	0	0	0	6	7	10	0	12	9	10	12	19	21	0	0	0	0	0
E	NFPA 13 90' Standard Elbow	0	2	2	3	4	5	6	7	8	10	12	14	18	22	27	35	40	45	50	61
G	NFPA 13 Gate Valve	0	0	0	0	0	1	1	1	1	2	2	3	4	5	6	7	8	10	11	13
S	NFPA 13 Swing Check	0	0	5	7	9	11	14	16	19	22	27	32	45	55	65					
T	NFPA 13 90' Flow thru Tee	3	4	5	6	8	10	12	15	17	20	25	30	35	50	60	71	81	91	101	121
V	Vic 90' Firelock Ell #001	0	0	0	2.00	2.63	3.5	4.4	5	0	6.88	8.5	10	13	17	20	0	0	0	0	0
X	Vic 90' Firelock Tee #002 Branch	0	0	0	7.5	6.63	8.5	10.9	13	0	16	21	25	33	41	50	0	0	0	0	0
Zai	Ames 4000SS	Fitting generates a Fixed Loss Based on Flow																			

Units Summary

Diameter Units	Inches
Length Units	Feet
Flow Units	US Gallons per Minute
Pressure Units	Pounds per Square Inch

Note: Fitting Legend provides equivalent pipe lengths for fittings types of various diameters. Equivalent lengths shown are standard for actual diameters of Sched 40 pipe and CFactors of 120 except as noted with *. The fittings marked with a * show equivalent lengths values supplied by manufacturers based on specific pipe diameters and CFactors and they require no adjustment. All values for fittings not marked with a * will be adjusted in the calculation for CFactors of other than 120 and diameters other than Sched 40 per NFPA.

SUPPLY ANALYSIS

Node at Source	Static Pressure	Residual Pressure	Flow	Available Pressure	Total Demand	Required Pressure
TEST	88.0	73	1119.0	81.028	739.58	69.849

NODE ANALYSIS

Node Tag	Elevation	Node Type	Pressure at Node	Discharge at Node	Notes	
167	32.78	8	11.83	27.51	0.2	130
168	32.78	8	12.15	27.89	0.2	130
170	32.78	8	11.84	27.52	0.2	130
171	32.78	8	12.16	27.9	0.2	130
173	32.51	8	10.56	26.0	0.2	130
174	32.51	8	10.75	26.23	0.2	130
175	32.51	8	11.42	27.04	0.2	130
177	32.51	8	10.64	26.09	0.2	130
178	32.51	8	10.82	26.32	0.2	130
179	32.51	8	11.5	27.13	0.2	130
181	32.25	8	10.87	26.37	0.2	130
182	32.25	8	11.06	26.6	0.2	130
183	32.25	8	11.75	27.42	0.2	130
185	32.25	8	11.1	26.65	0.2	130
186	32.25	8	11.29	26.88	0.2	130
187	32.25	8	12.0	27.71	0.2	130
189	32.0	8	13.17	29.03	0.2	130
190	32.0	8	13.39	29.28	0.2	130
169	32.78		13.09			
172	32.78		13.1			
176	32.51		13.24			
180	32.51		13.33			
184	32.25		13.62			
188	32.25		13.9			
191	32.0		14.42			
50	30.0		17.87			
15	30.0		21.75			
910	30.0		29.22			
911	11.0		38.92			
912	11.0		41.28			
913	13.0		43.43			
914	15.67		43.91			
915	29.0		38.33			
916	29.0		39.32			
917	34.67		38.54			
918	11.5		48.89			
TR3	11.5		49.99			
BR3	3.0		54.41			
BR1	3.0		54.67			
BASR	1.0		55.55	100.0		
U2	-3.0		67.9			
HYD	-3.0		67.95	150.0		

NODE ANALYSIS (cont.)

Node Tag	*Elevation*	*Node Type*	*Pressure at Node*	*Discharge at Node*	*Notes*
U1	-3.0		68.44		
TEST	-3.0		69.85		

Node1 to Node2	Elev1 Elev2	K Fact	Qa Qt	Nom Act	Fitting or Eqiv	Len	Pipe Ftngs Total	CFact Pf/Ft	Pt Pe Pf	******* Notes ******
167	32.780	8.00	27.51	1.5			13.830	120	11.828	
to									0.0	
168	32.780		27.51	1.682			13.830	0.0236	0.326	Vel = 3.97
168	32.780	8.00	27.89	1.5	T	9.9	1.000	120	12.154	
to							9.900		0.0	
169	32.780		55.4	1.682			10.900	0.0860	0.937	Vel = 8.00
			0.0							
169			55.40						13.091	K Factor = 15.31
170	32.780	8.00	27.52	1.5			13.830	120	11.835	
to									0.0	
171	32.780		27.52	1.682			13.830	0.0236	0.326	Vel = 3.97
171	32.780	8.00	27.90	1.5	T	9.9	1.000	120	12.161	
to							9.900		0.0	
172	32.780		55.42	1.682			10.900	0.0861	0.938	Vel = 8.00
			0.0							
172			55.42						13.099	K Factor = 15.31
173	32.510	8.00	26.00	1.5			8.750	120	10.562	
to									0.0	
174	32.510		26.0	1.682			8.750	0.0213	0.186	Vel = 3.75
174	32.510	8.00	26.23	1.5			8.750	120	10.748	
to									0.0	
175	32.510		52.23	1.682			8.750	0.0771	0.675	Vel = 7.54
175	32.510	8.00	27.04	1.5	T	9.9	1.000	120	11.423	
to							9.900		0.0	
176	32.510		79.27	1.682			10.900	0.1668	1.818	Vel = 11.45
			0.0							
176			79.27						13.241	K Factor = 21.78
177	32.510	8.00	26.09	1.5			8.750	120	10.636	
to									0.0	
178	32.510		26.09	1.682			8.750	0.0214	0.187	Vel = 3.77
178	32.510	8.00	26.32	1.5			8.750	120	10.823	
to									0.0	
179	32.510		52.41	1.682			8.750	0.0776	0.679	Vel = 7.57
179	32.510	8.00	27.13	1.5	T	9.9	1.000	120	11.502	
to							9.900		0.0	
180	32.510		79.54	1.682			10.900	0.1679	1.830	Vel = 11.48
			0.0							
180			79.54						13.332	K Factor = 21.78
181	32.250	8.00	26.37	1.5			8.750	120	10.868	
to									0.0	
182	32.250		26.37	1.682			8.750	0.0218	0.191	Vel = 3.81
182	32.250	8.00	26.61	1.5			8.750	120	11.059	
to									0.0	
183	32.250		52.98	1.682			8.750	0.0792	0.693	Vel = 7.65
183	32.250	8.00	27.42	1.5	T	9.9	1.000	120	11.752	
to							9.900		0.0	
184	32.250		80.4	1.682			10.900	0.1712	1.866	Vel = 11.61
			0.0							

Node1 to Node2	Elev1 Elev2	K Fact	Qa Qt	Nom Act	Fitting or Eqiv	Len	Pipe Ftngs Total	CFact Pf/Ft	Pt Pe Pf	******* Notes ******
184			80.40						13.618	K Factor = 21.79
185	32.250	8.00	26.65	1.5			8.750	120	11.097	
to									0.0	
186	32.250		26.65	1.682			8.750	0.0222	0.194	Vel = 3.85
186	32.250	8.00	26.88	1.5			8.750	120	11.291	
to									0.0	
187	32.250		53.53	1.682			8.750	0.0807	0.706	Vel = 7.73
187	32.250	8.00	27.71	1.5	T	9.9	1.000	120	11.997	
to							9.900		0.0	
188	32.250		81.24	1.682			10.900	0.1746	1.903	Vel = 11.73
			0.0							
188			81.24						13.900	K Factor = 21.79
189	32	8.00	29.03	1.5			8.750	120	13.166	
to									0.0	
190	32		29.03	1.682			8.750	0.0259	0.227	Vel = 4.19
190	32	8.00	29.27	1.5	T	9.9	1.000	120	13.393	
to							9.900		0.0	
191	32		58.3	1.682			10.900	0.0945	1.030	Vel = 8.42
			0.0							
191			58.30						14.423	K Factor = 15.35
169	32.780		55.40	4			8.000	120	13.091	
to									0.0	
172	32.780		55.4	4.26			8.000	0.0010	0.008	Vel = 1.25
172	32.780		55.42	4			7.420	120	13.099	
to									0.117	
176	32.510		110.82	4.26			7.420	0.0034	0.025	Vel = 2.49
176	32.510		79.27	4			10.000	120	13.241	
to									0.0	
180	32.510		190.09	4.26			10.000	0.0091	0.091	Vel = 4.28
180	32.510		79.54	4			10.000	120	13.332	
to									0.113	
184	32.250		269.63	4.26			10.000	0.0173	0.173	Vel = 6.07
184	32.250		80.40	4			10.000	120	13.618	
to									0.0	
188	32.250		350.03	4.26			10.000	0.0282	0.282	Vel = 7.88
188	32.250		81.25	4			10.000	120	13.900	
to									0.108	
191	32		431.28	4.26			10.000	0.0415	0.415	Vel = 9.71
191	32		58.30	4	V	9.059	19.000	120	14.423	
to					X	21.067	30.126		0.866	
50	30		489.58	4.26			49.126	0.0524	2.576	Vel = 11.02
50	30		0.0	4	V	9.059	65.000	120	17.865	
to							9.059		0.0	
15	30		489.58	4.26			74.059	0.0524	3.883	Vel = 11.02
15	30		0.0	4	X	21.067	112.410	120	21.748	
to					V	9.059	30.126		0.0	
910	30		489.58	4.26			142.536	0.0524	7.474	Vel = 11.02
910	30		0.0	4	V	9.059	19.000	120	29.222	
to							9.059		8.229	
911	11		489.58	4.26			28.059	0.0524	1.471	Vel = 11.02

Final Calculations : Hazen-Williams

Node1 to Node2	Elev1 Elev2	K Fact	Qa Qt	Nom Act	Fitting or Eqiv	Len	Pipe Ftngs Total	CFact Pf/Ft	Pt Pe Pf	******* Notes ******
911	11		0.0	4	X	21.067	23.917	120	38.922	
to							21.067		0.0	
912	11		489.58	4.26			44.984	0.0524	2.359	Vel = 11.02
912	11		0.0	4	2V	18.118	13.083	120	41.281	
to					T	26.334	44.452		-0.866	
913	13		489.58	4.26			57.535	0.0524	3.016	Vel = 11.02
913	13		0.0	6	8V	100.587	118.417	120	43.431	
to							100.587		-1.156	
914	15.670		489.58	6.357			219.004	0.0075	1.634	Vel = 4.95
914	15.670		0.0	6	V	12.573	13.333	120	43.909	
to							12.573		-5.773	
915	29		489.58	6.357			25.906	0.0075	0.194	Vel = 4.95
915	29		0.0	6	V	12.573	120.250	120	38.330	
to							12.573		0.0	
916	29		489.58	6.357			132.823	0.0075	0.991	Vel = 4.95
916	29		0.0	6	4V	50.294	142.000	120	39.321	
to					X	31.433	81.727		-2.456	
917	34.670		489.58	6.357			223.727	0.0075	1.670	Vel = 4.95
917	34.670		0.0	6	2V	25.147	17.500	120	38.535	
to							25.147		10.035	
918	11.500		489.58	6.357			42.647	0.0075	0.318	Vel = 4.95
918	11.500		0.0	6	4V	50.294	97.000	120	48.888	
to							50.294		0.0	
TR3	11.500		489.58	6.357			147.294	0.0075	1.100	Vel = 4.95
TR3	11.500		0.0	6	S	40.235	8.500	120	49.988	
to					B	12.573	90.528		3.681	
BR3	3		489.58	6.357	T	37.72	99.028	0.0075	0.739	Vel = 4.95
BR3	3		0.0	6	X	31.433	4.000	120	54.408	
to							31.433		0.0	
BR1	3		489.58	6.357			35.433	0.0075	0.265	Vel = 4.95
BR1	3		0.0	6			2.000	120	54.673	
to									0.866	
BASR	1		489.58	6.357			2.000	0.0075	0.015	Vel = 4.95
BASR	1	H100	100.00	8	Zai	0.0	91.000	150	55.554	
to					T	52.855	200.850		11.672	* * Fixed Loss = 9.94
U2	-3		589.58	7.98	2G	12.081	291.850	0.0023	0.672	Vel = 3.78
					5E	135.913				
U2	-3		0.0	8	G	6.041	16.000	150	67.898	
to							6.040		0.0	
HYD	-3		589.58	7.98			22.040	0.0023	0.051	Vel = 3.78
HYD	-3	H150	150.00	8	G	6.326	142.000	140	67.949	
to							6.326		0.0	
U1	-3		739.58	8.27			148.326	0.0033	0.496	Vel = 4.42
U1	-3		0.0	8	2G	12.652	352.000	140	68.445	
to					T	55.354	68.006		0.0	
TEST	-3		739.58	8.27			420.006	0.0033	1.404	Vel = 4.42
			0.0							
TEST			739.58						69.849	K Factor = 88.49

Node1 to Node2	Elev1 Elev2	K Fact	Qa Qt	Nom Act	Fitting or Eqiv	Len	Pipe Ftngs Total	CFact Pf/Ft	Pt Pe Pf	*******	Notes	******

Hydraulic Calculations by HydraCALC

Phoenix Fire Protection
2863 Lee Avenue
Sanford, NC 27332
919-774-3042

Larry D Taylor

Nicet Level IV_Cert. No. 112126

Job Name	:	FLATWOODS MIDDLE SCHOOL
Drawing	:	FP-4
Location	:	LILLINGTON, NC
Remote Area	:	11
Contract	:	C05-25
Data File	:	Flatwoods Middle School Area 11.WXF

HYDRAULIC CALCULATIONS
for

JOB NAME FLATWOODS MIDDLE SCHOOL
Location LILLINGTON, NC
Drawing # FP-4
Contract # C05-25
Date 11-11-2025

DESIGN
Remote area # 11
Remote area location DINING 300
Occupancy classification LIGHT
Density .10 - Gpm/SqFt
Area of application 1500 - SqFt
Coverage/sprinkler 196 - SqFt
Type of sprinkler calculated K 5.6
 # Sprinklers calculated 10
In-rack demand N/A - GPM
Hose streams 100 - GPM
Total water required (including hose streams) 312.744 - GPM @ 49.8102 - Psi
Type of system WET
Volume of system (dry or pre-action) N/A - Gal

WATER SUPPLY INFORMATION
Test date 07-17-2025
Location SITE HYDRANT
Source of info HARNETT COUNTY

CONTRACTOR INFO Phoenix Fire Protection
Address 2863 Lee Avenue / Sanford, NC 27332
Phone # 919-774-3042
Name of designer KM
Authority having jurisdiction HARNETT COUNTY
NOTES:
Revised 11-11-2025

text1(35) - invisible

City Water Supply:
- C1 - Static Pressure : 88
- C2 - Residual Pressure: 73
- C2 - Residual Flow : 1119

Demand:
- D1 - Elevation : 8.736
- D2 - System Flow : 212.744
- D2 - System Pressure : 49.810
- Hose (Demand) : 100
- D3 - System Demand : 312.744
- Safety Margin : 36.771

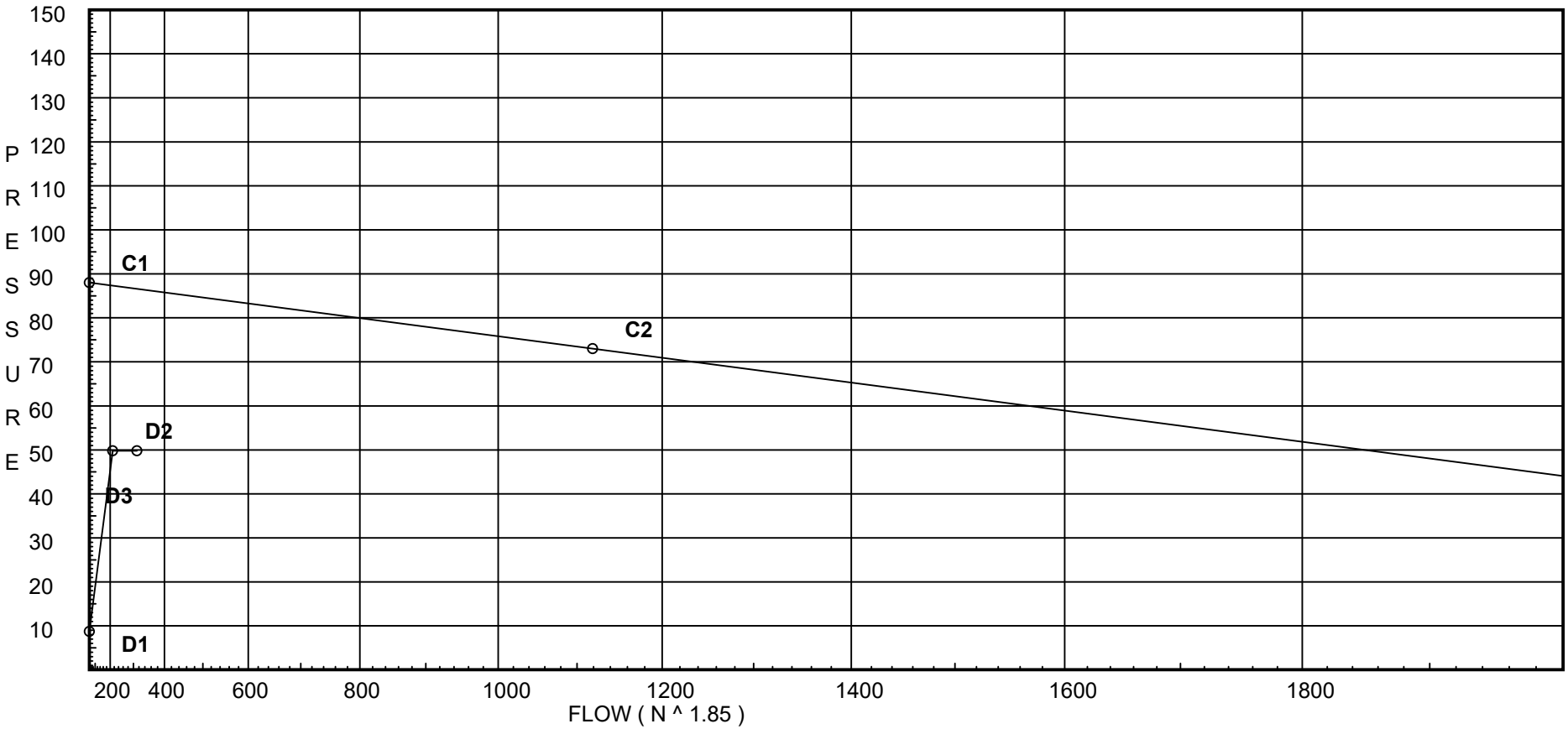

```
     19.6            59.5
154 ← 155 ← 156 ← 157 ← 164
            39.3            80.6
                              |   80.6
     20             60.7      |
158 ← 159 ← 160 ← 161 ← 165
            40.1            82.2

     24.9
162 ← 163 ← 166
            49.9

     80.6            212.7           212.7           212.7           212.7           212.7           312.7           312.7
164 ← 165 ← 166 ← 192 ← 193 ← 151 ← 152 ← 153 ← TR2 ← BR2 ← BR1 ← BASR ← U2 ← HYD ← U1 ← TEST
            162.8           212.7           212.7           212.7           212.7           312.7           312.7
```

Fittings Used Summary

Fitting Legend

Abbrev.	Name	½	¾	1	1¼	1½	2	2½	3	3½	4	5	6	8	10	12	14	16	18	20	24
B	NFPA 13 Butterfly Valve	0	0	0	0	0	6	7	10	0	12	9	10	12	19	21	0	0	0	0	0
E	NFPA 13 90' Standard Elbow	0	2	2	3	4	5	6	7	8	10	12	14	18	22	27	35	40	45	50	61
G	NFPA 13 Gate Valve	0	0	0	0	0	1	1	1	1	2	2	3	4	5	6	7	8	10	11	13
S	NFPA 13 Swing Check	0	0	5	7	9	11	14	16	19	22	27	32	45	55	65					
T	NFPA 13 90' Flow thru Tee	3	4	5	6	8	10	12	15	17	20	25	30	35	50	60	71	81	91	101	121
V	Vic 90' Firelock Ell #001	0	0	0	2.00	2.63	3.5	4.4	5	0	6.88	8.5	10	13	17	20	0	0	0	0	0
X	Vic 90' Firelock Tee #002 Branch	0	0	0	7.5	6.63	8.5	10.9	13	0	16	21	25	33	41	50	0	0	0	0	0
Zai	Ames 4000SS	Fitting generates a Fixed Loss Based on Flow																			

Units Summary

Diameter Units	Inches
Length Units	Feet
Flow Units	US Gallons per Minute
Pressure Units	Pounds per Square Inch

Note: Fitting Legend provides equivalent pipe lengths for fittings types of various diameters. Equivalent lengths shown are standard for actual diameters of Sched 40 pipe and CFactors of 120 except as noted with *. The fittings marked with a * show equivalent lengths values supplied by manufacturers based on specific pipe diameters and CFactors and they require no adjustment. All values for fittings not marked with a * will be adjusted in the calculation for CFactors of other than 120 and diameters other than Sched 40 per NFPA.

SUPPLY ANALYSIS

Node at Source	Static Pressure	Residual Pressure	Flow	Available Pressure	Total Demand	Required Pressure
TEST	88.0	73	1119.0	86.581	312.74	49.81

NODE ANALYSIS

Node Tag	Elevation	Node Type	Pressure at Node	Discharge at Node	Notes	
154	17.17	5.6	12.25	19.6	0.1	196
155	17.17	5.6	12.41	19.73	0.1	196
156	17.17	5.6	12.98	20.18	0.1	196
157	17.17	5.6	14.22	21.12	0.1	196
158	18.0	5.6	12.74	19.99	0.1	196
159	18.0	5.6	12.91	20.12	0.1	196
160	18.0	5.6	13.5	20.58	0.1	196
161	18.0	5.6	14.79	21.53	0.1	196
162	19.17	5.6	19.73	24.87	0.1	196
163	19.17	5.6	19.97	25.03	0.1	196
164	12.0		26.66			
165	12.0		26.67			
166	12.0		26.76			
192	12.0		27.27			
193	12.0		28.54			
151	13.08		28.32			
152	12.17		29.87			
153	12.17		30.45			
TR2	12.17		30.66			
BR2	3.0		35.55			
BR1	3.0		35.6			
BASR	1.0		36.47	100.0		
U2	-3.0		49.41			
HYD	-3.0		49.42			
U1	-3.0		49.52			
TEST	-3.0		49.81			

Node1 to Node2	Elev1 Elev2	K Fact	Qa Qt	Nom Act	Fitting or Eqiv	Len	Pipe Ftngs Total	CFact Pf/Ft	Pt Pe Pf	******* Notes ******
154	17.170	5.60	19.60	1.5			12.625	120	12.250	
to									0.0	
155	17.170		19.6	1.682			12.625	0.0126	0.159	Vel = 2.83
155	17.170	5.60	19.73	1.5			12.625	120	12.409	
to									0.0	
156	17.170		39.33	1.682			12.625	0.0456	0.576	Vel = 5.68
156	17.170	5.60	20.18	1.5			12.625	120	12.985	
to									0.0	
157	17.170		59.51	1.682			12.625	0.0981	1.239	Vel = 8.59
157	17.170	5.60	21.12	1.5	3V	9.764	39.580	120	14.224	
to					T	9.9	19.664		2.239	
164	12		80.63	1.682			59.244	0.1721	10.197	Vel = 11.64
			0.0							
164			80.63						26.660	K Factor = 15.62
158	18	5.60	19.99	1.5			12.625	120	12.741	
to									0.0	
159	18		19.99	1.682			12.625	0.0131	0.165	Vel = 2.89
159	18	5.60	20.12	1.5			12.625	120	12.906	
to									0.0	
160	18		40.11	1.682			12.625	0.0473	0.597	Vel = 5.79
160	18	5.60	20.57	1.5			12.625	120	13.503	
to									0.0	
161	18		60.68	1.682			12.625	0.1018	1.285	Vel = 8.76
161	18	5.60	21.54	1.5	V	3.255	38.875	120	14.788	
to					T	9.9	13.155		2.599	
165	12		82.22	1.682			52.030	0.1785	9.285	Vel = 11.87
			0.0							
165			82.22						26.672	K Factor = 15.92
162	19.170	5.60	24.87	1.5			12.625	120	19.726	
to									0.0	
163	19.170		24.87	1.682			12.625	0.0196	0.247	Vel = 3.59
163	19.170	5.60	25.03	1.5	V	3.255	38.875	120	19.973	
to					T	9.9	13.155		3.105	
166	12		49.9	1.682			52.030	0.0709	3.687	Vel = 7.21
			0.0							
166			49.90						26.765	K Factor = 9.65
164	12		80.63	4			6.500	120	26.660	
to									0.0	
165	12		80.63	4.26			6.500	0.0018	0.012	Vel = 1.81
165	12		82.21	4			13.500	120	26.672	
to									0.0	
166	12		162.84	4.26			13.500	0.0069	0.093	Vel = 3.67
166	12		49.90	4	V	9.059	36.170	120	26.765	
to							9.059		0.0	
192	12		212.74	4.26			45.229	0.0112	0.507	Vel = 4.79
192	12		0.0	4	3V	27.177	85.500	120	27.272	
to							27.177		0.0	
193	12		212.74	4.26			112.677	0.0112	1.264	Vel = 4.79

Final Calculations : Hazen-Williams

Node1 to Node2	Elev1 Elev2	K Fact	Qa Qt	Nom Act	Fitting or Eqiv	Len	Pipe Ftngs Total	CFact Pf/Ft	Pt Pe Pf	******* Notes ******
193	12		0.0	4	2V	18.118	4.500	120	28.536	
to							18.118		-0.468	
151	13.080		212.74	4.26			22.618	0.0112	0.254	Vel = 4.79
			0.0							
151			212.74						28.322	K Factor = 39.97
151	13.080		212.74	4	4V	36.236	67.000	120	28.322	
to							36.236		0.394	
152	12.170		212.74	4.26			103.236	0.0112	1.159	Vel = 4.79
152	12.170		0.0	4	V	9.059	42.500	120	29.875	
to							9.059		0.0	
153	12.170		212.74	4.26			51.559	0.0112	0.578	Vel = 4.79
153	12.170		0.0	4	V	9.059	9.710	120	30.453	
to							9.059		0.0	
TR2	12.170		212.74	4.26			18.769	0.0112	0.211	Vel = 4.79
TR2	12.170		0.0	4	S	28.968	10.250	120	30.664	
to					B	15.8	71.102		3.972	
BR2	3		212.74	4.26	T	26.334	81.352	0.0112	0.912	Vel = 4.79
BR2	3		0.0	6	X	31.433	2.000	120	35.548	
to							31.433		0.0	
BR1	3		212.74	6.357			33.433	0.0016	0.053	Vel = 2.15
BR1	3		0.0	6			2.000	120	35.601	
to									0.866	
BASR	1		212.74	6.357			2.000	0.0020	0.004	Vel = 2.15
BASR	1	H100	100.00	8	Zai	0.0	91.000	150	36.471	
to					T	52.855	200.850		12.729	* * Fixed Loss = 10.997
U2	-3		312.74	7.98	2G	12.081	291.850	0.0007	0.208	Vel = 2.01
					5E	135.913				
U2	-3		0.0	8	G	6.041	16.000	150	49.408	
to							6.040		0.0	
HYD	-3		312.74	7.98			22.040	0.0007	0.016	Vel = 2.01
HYD	-3		0.0	8	G	6.326	142.000	140	49.424	
to							6.326		0.0	
U1	-3		312.74	8.27			148.326	0.0007	0.100	Vel = 1.87
U1	-3		0.0	8	2G	12.652	352.000	140	49.524	
to					T	55.354	68.006		0.0	
TEST	-3		312.74	8.27			420.006	0.0007	0.286	Vel = 1.87
			0.0							
TEST			312.74						49.810	K Factor = 44.31

WATER FLOW TEST REPORT

HYDRANT # & LOCATION Existing Hydrants US-401 DATE: 7/17/2025

TEST BY: Debby Autry Day or Week: Thursday TIME OF DAY: 10:00 MIN. OF FLOW: 5

WATER SUPPLIED BY: Harnett County

PURPOSE OF TEST: Existing Water Supply

DATA

FLOW HYDRANT(S)	A1	A2	A3
SIZE OPENING:	2.5		
COEFFICIENT:	0.9		
PITOT READING:	44		
GPM:	**1119**	0	0

TOTAL FLOW DURING TEST: **1119** GPM

STATIC READING: 88 PSI RESIDUAL: 73 PSI

RESULTS: AT 20 PSI RESIDUAL **2531** GPM AT 0 PSI **2909** GPM

ESTIMATED CONSUMPTION: **5595** GAL.

REMARKS: Flow Hydrant at 3483 US 401, Gauge Hydrant at Intersection US 401 and Joel Johnson Road
Witnessed By: James Lowery (Harnett County Water) Jake Monson (Phoenix Fire Protection)

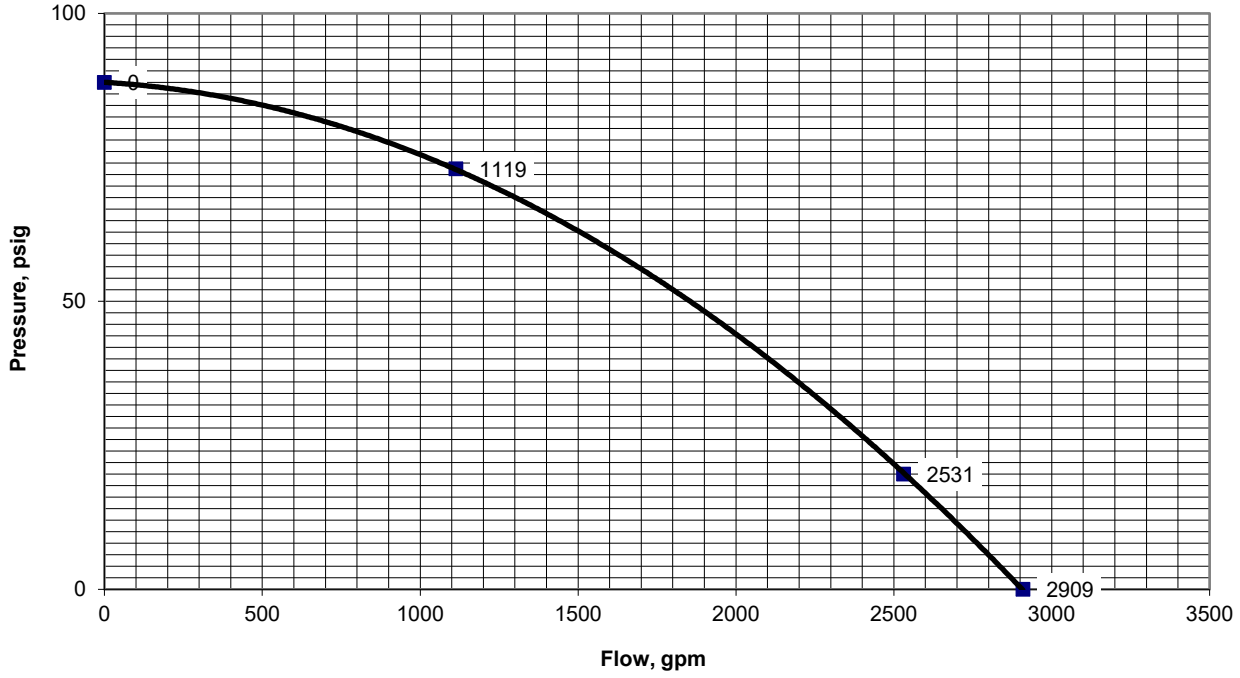

Victaulic® FireLock™ Series FL-ECLH/C Extended Coverage, Quick Response Concealed Pendent Sprinklers K5.6 (8.1), K8.0 (11.5), K11.2 (16.2)

1.0 PRODUCT DESCRIPTION

QUICK RESPONSE EXTENDED COVERAGE CONCEALED PENDENT SPRINKLERS			
SIN	**V5603**	**V3102**	**V1106**
ORIENTATION	Concealed Pendent	Concealed Pendent	Concealed Pendent
K-FACTOR[1]	5.6 Imp./8.1 S.I.	8.0 Imp./11.5 S.I.	11.2 Imp. /16.2 S.I.
CONNECTION	½" NPT/15mm BSPT	¾" NPT/ 20mm BSPT	¾" NPT/ 20mm BSPT
MAX. WORKING PRESSURE	175 psi (1200 kPa)	175 psi (1200 kPa)	175 psi (1200 kPa)
GLOBE RE-DESIGNATION	GL5603	–	GL1106
VICTAULIC EQUIVALENT	–	–	V3104

AVAILABLE WRENCHES			
SPRINKLER	**V56 Concealed**	**V33 Concealed**	**V11 Concealed**
PENDENT	■	■	■

Factory Hydrostatic Test: 100% @ 500 psi/3447 kPa/34 bar

Min. Operating Pressure: UL/FM: 7psi/48 kPa/.5 bar

Temperature Rating: See tables in section 2.0

[1] For K-Factor when pressure is measured in bar, multiply S.I. units by 10.0.

ALWAYS REFER TO ANY NOTIFICATIONS AT THE END OF THIS DOCUMENT REGARDING PRODUCT INSTALLATION, MAINTENANCE OR SUPPORT.

 © 2023 Victaulic Company. All rights reserved.

2.0 CERTIFICATION/LISTINGS

SIN		V5603					
Nominal K Factor Imperial		5.6					
Nominal K Factor S.I.[2]		8.1					
Installation Type		Concealed Pendent					
Maximum Coverage Area Width x Length Ft. x Ft m x m	**Listing Agency**	**Response**	**Flow** GPM L/min	**Pressure** PSI kPa	**Approved Temperature Ratings**	**Approved Coverplate Temperature Ratings**	**Minimum Spacing** Ft m
16 X 16 4.9 X 4.9	cULus	QR	26 98	21.5 148	135°F/57°C 155°F/68°C 175°F/79°C	135°F/57°C 135°F/57°C 155°F/68°C	8 2.4
18 x 18 5.5 x 5.5	cULus	QR	33 125	34.7 239	135°F/57°C 155°F/68°C 175°F/79°C	135°F/57°C 135°F/57°C 155°F/68°C	
20 x 20 6.1 x 6.1	cULus	QR	40 151	51 352	135°F/57°C	135°F/57°C	

SIN		V3102					
Nominal K Factor Imperial		8					
Nominal K Factor S.I.[2]		11.5					
Installation Type		Concealed Pendent					
Maximum Coverage Area Width x Length Ft. x Ft m x m	**Listing Agency**	**Response**	**Flow** GPM L/min	**Pressure** PSI kPa	**Approved Temperature Ratings**	**Approved Coverplate Temperature Ratings**	**Minimum Spacing** Ft. m
16 X 16 4.9 X 4.9	cULus	QR	26 98	10.6 73	135°F/57°C	135°F/57°C	8 2.4
18 x 18 5.5 x 5.5	cULus	QR	33 125	17 117	135°F/57°C	135°F/57°C	
20 x 20 6.1 x 6.1	cULus	QR	40 151	25 172	135°F/57°C	135°F/57°C	

SIN		V1106					
Nominal K Factor Imperial		11.2					
Nominal K Factor S.I.[2]		16.2					
Installation Type		Concealed Pendent					
Maximum Coverage Area Width x Length Ft. x Ft m x m	**Listing Agency**	**Response**	**Flow** GPM L/min	**Pressure** PSI kPa	**Approved Temperature Ratings**	**Approved Coverplate Temperature Ratings**	**Minimum Spacing** Ft. m
16 X 16 4.9 X 4.9	cULus	QR	30 113.6	7.2 50	135°F/57°C 155°F/68°C 175°F/79°C 200°F/93°C	135°F/57°C 135°F/57°C 155°F/68°C 155°F/68°C	9 2.7
18 x 18 5.5 x 5.5	cULus	QR	33 125	8.7 60	135°F/57°C 155°F/68°C 175°F/79°C 200°F/93°C	135°F/57°C 135°F/57°C 155°F/68°C 155°F/68°C	
20 x 20 6.1 x 6.1	cULus	QR	40 151	12.8 88	135°F/57°C 155°F/68°C 175°F/79°C 200°F/93°C	135°F/57°C 135°F/57°C 155°F/68°C 155°F/68°C	

[2] For K-Factor when pressure is measured in bar, multiply S.I. units by 10.0.

NOTES

- Listings and approval as of printing.
- These sprinklers are required to be vented. Installations with a positive pressure air plenum above the housing are not permitted.

 © 2023 Victaulic Company. All rights reserved.

3.0 SPECIFICATIONS – MATERIAL

Deflector: Bronze
Bulb Nominal Diamter: 3.0 mm
Load Screw: Brass
Pip Cap: Brass
Spring Seal: PTFE coated Beryllium nickel alloy
Frame: Brass
Lodgement Spring: Stainless Steel
Pin: Stainless Steel
Cup: Steel
Cover Plate: Steel
Installation Wrench: Ductile Iron
Cover Plate Finishes:

- Chrome plated
- White painted
- Flat black painted
- Custom painted

NOTE

- For cabinets and other accessories refer to separate sheet.

4.0 DIMENSIONS

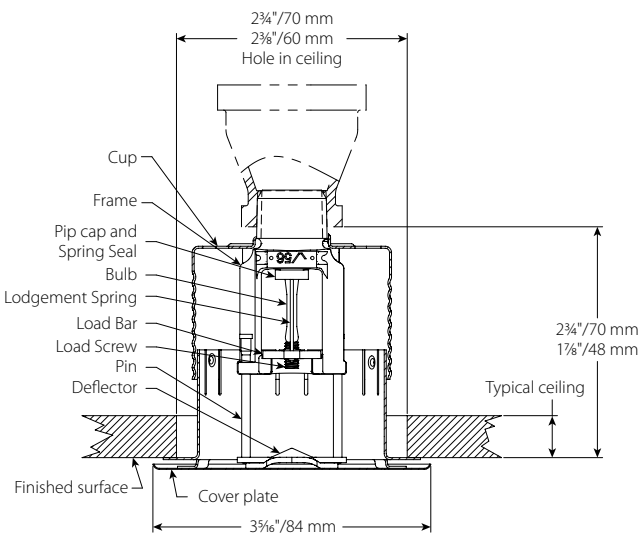

V5603

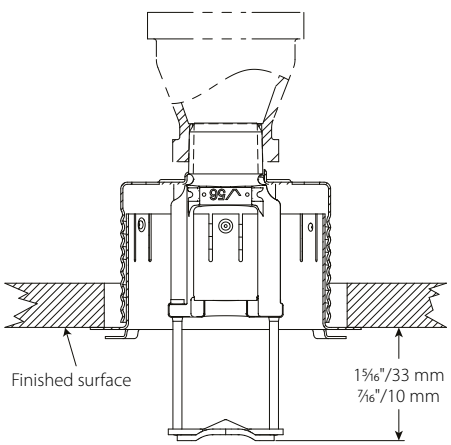

V5603

 © 2023 Victaulic Company. All rights reserved.

4.0 DIMENSIONS

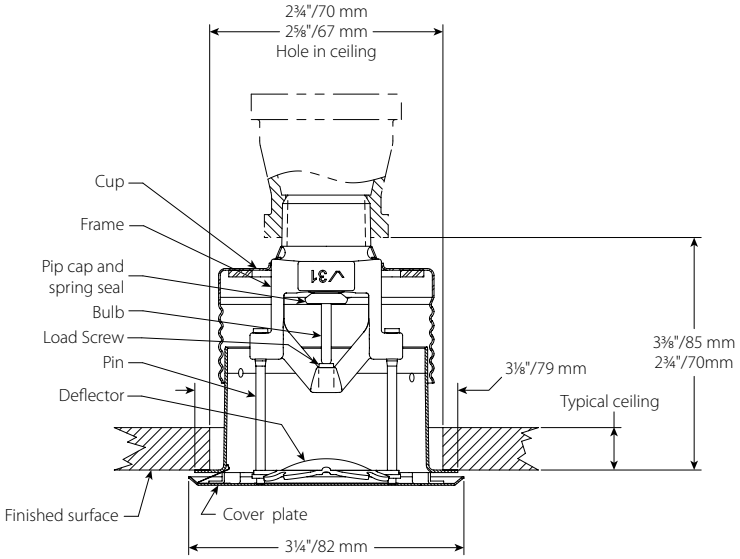

V3102

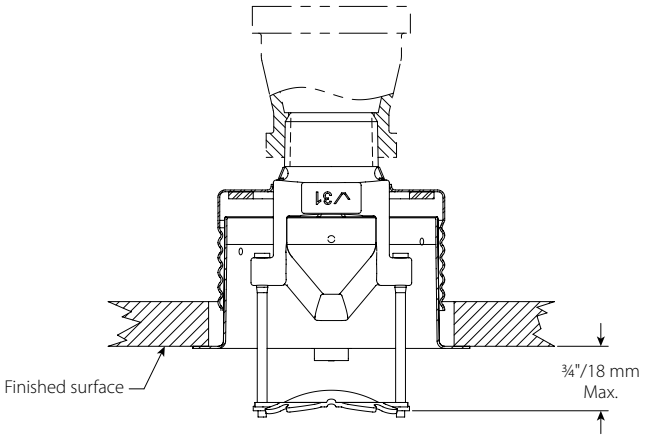

V3102

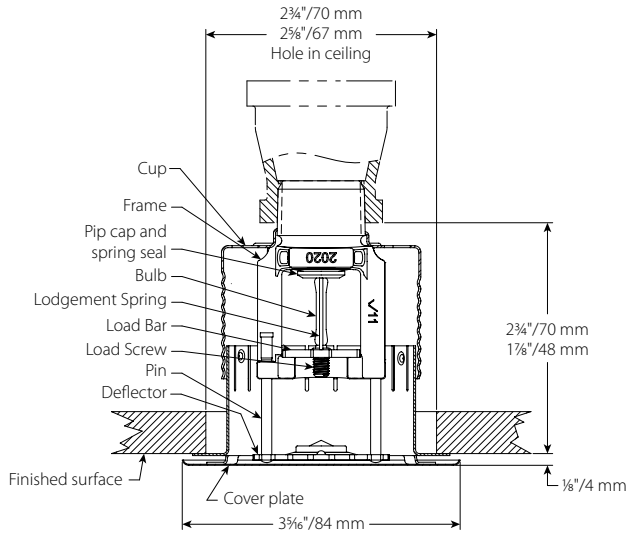

V1106

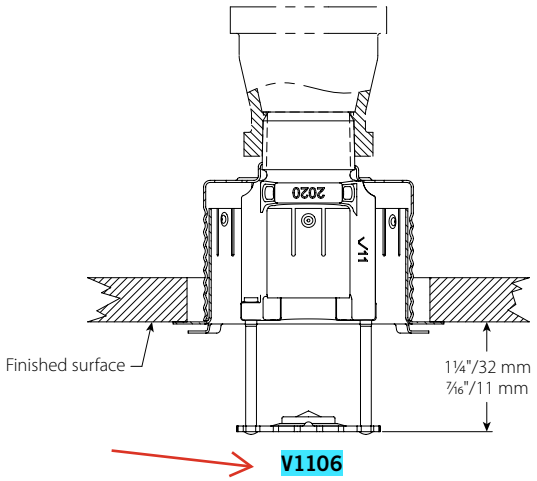

V1106

5.0 PERFORMANCE

Sprinkler is to be installed and designed as per NFPA, FM Datasheets, or any local standards.

 © 2023 Victaulic Company. All rights reserved.

Victaulic® FireLock Model FL-QR/C Standard Coverage, Quick Response Concealed Pendent Sprinklers, K5.6 (8.1)

1.0 PRODUCT DESCRIPTION

QUICK RESPONSE CONCEALED PENDENT SPRINKLERS			
SIN	**V5606**	**V3802[2]**	**V3808[2]**
ORIENTATION	Concealed Pendent	Concealed Pendent	Concealed Pendent
K-FACTOR[1]	5.6 Imp./8.1 S.I.	5.6 Imp./8.1 S.I.	5.6 Imp./8.1 S.I.
CONNECTION	½" NPT/15mm BSPT	½" NPT/15mm BSPT	½" NPT/15mm BSPT
MAX. WORKING PRESSURE	175 psi (1200 kPa)	175 psi (1200 kPa)	300psi (2068 kPa)
ESCUTCHEON	Concealed	Concealed	Concealed
GLOBE RE-DESIGNATED	GL5606	–	–
GLOBE EQUIVALENT	–	GL5604	GL5605

AVAILABLE WRENCHES			
SPRINKLER	**1" ADJ Concealed**	**V38 Concealed**	**V38 Concealed**
PENDENT	■	■	■

CLEAN ROOM GASKET			
SPRINKLER	**1" ADJ Concealed**	**V38 Concealed**	**V38 Concealed**
PENDENT		■	■

Factory Hydrostatic Test: 100% @ 500 psi/3447 kPa/34 bar

Min. Operating Pressure: UL/FM: 7psi/48 kPa/.5 bar

Temperature Rating: See tables in section 2.0

1 For K-Factor when pressure is measured in bar, multiply S.I. units by 10.0.

2 V3802 and V3808 are listed as Standard Response when installed using clean room gasketed coverplate.

ALWAYS REFER TO ANY NOTIFICATIONS AT THE END OF THIS DOCUMENT REGARDING PRODUCT INSTALLATION, MAINTENANCE OR SUPPORT.

 © 2023 Victaulic Company. All rights reserved.

2.0 CERTIFICATION/LISTINGS

LPS 1186: Issue 3.1
Cert/LPCB Ref. 104b/06

APPROVALS/LISTINGS					
SIN	**V5606**	**Cover Plate**	**V3802**	**V3808**	**Cover Plate**
Nominal K Factor Imperial	5.6	–	5.6	5.6	–
Nominal K Factor S.I.[2]	8.1	–	8.1	8.1	–
Orientation	Pendent	–	Pendent	Pendent	–
Escutcheon	Concealed	–	Concealed	Concealed	–
	APPROVED TEMPERATURE RATINGS F°/C°				
cULus	135°F/57°C 155°F/68°C 175°F/79°C 200°F/93°C	135°F/57°C 135°F /57°C | 155°F/68°C 155°F/68°C 155°F/68°C	135°F/57°C 155°F/68°C 175°F/79°C 200°F/93°C	135°F/57°C 155°F/68°C 175°F/79°C 200°F/93°C	135°F/57°C 135°F/57°C 165°F/74°C 165°F/74°C
FM Standard Response Only	155°F/68°C 175°F/79°C 200°F/93°C	135°F /57°C | 155°F/68°C 155°F/68°C 155°F/68°C	155°F/68°C 175°F/79°C 200°F/93°C	–	135°F/57°C 135°F/57°C | 165°F/74°C 165°F/74°C
LPCB	–	–	155°F/68°C 175°F/79°C 200°F/93°C	–	138°F/59°C 165°F/74°C 165°F/74°C
CE	–	–	155°F/68°C 175°F/79°C 200°F/93°C	–	138°F/59°C 165°F/74°C 165°F/74°C
CCC K ZSTDY	–	–	155°F/68°C 200°F/93°C	–	135°F/57°C 135°F/57°C | 165°F/74°C

APPROVALS/LISTINGS WITH CLEAN ROOM GASKET			
SIN	**V3802[3]**	**V3808[3]**	**Cover Plate**
Nominal K Factor Imperial	5.6	5.6	–
Nominal K Factor S.I.[2]	8.1	8.1	–
Orientation	Pendent	Pendent	–
Escutcheon	Concealed	Concealed	–
	APPROVED TEMPERATURE RATINGS F°/C°		
cULus	135°F/57°C 155°F/68°C 175°F/79°C 200°F/93°C	135°F/57°C 155°F/68°C 175°F/79°C 200°F/93°C	135°F/57°C 135°F/57°C 165°F/74°C 165°F/74°C

[2] For K-Factor when pressure is measured in Bar, multiply S.I. units by 10.

[3] Listed as standard response when installed clean room using gasketed coverplate.

NOTES

- Listings and approval as of printing.
- New York City Acceptance – All UL Listed and/or FM Appwroved sprinklers acceptable to NYC per section 28-113 of the Administrative Code and the OTCR Rule.
- These sprinklers are required to be vented. Installations with a positive pressure air plenum above the housing are not permitted.

 © 2023 Victaulic Company. All rights reserved.

3.0 SPECIFICATIONS – MATERIAL

Deflector: Bronze
Bulb Nominal Diamter: 3.0 mm
Load Screw: Brass
Pip Cap: Brass
Spring Seal: PTFE coated Beryllium nickel alloy
Frame: Brass
Concealed Cup: Steel
Cover Plate: Steel
Lodgement Spring: Stainless Steel
Pin: Stainless Steel
Installation Wrench: Ductile Iron
Sealing Gasket: White nitrile (CLEAN ROOM USE ONLY)
Cover Plate Finishes:

- Chrome plated
- White painted
- Flat black painted
- Custom painted

NOTE

- For cabinets and other accessories refer to separate sheet.

4.0 DIMENSIONS

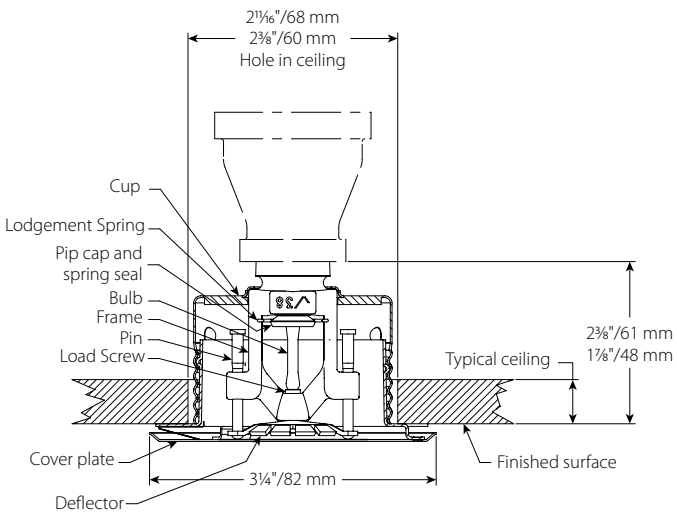

V3802, V3808

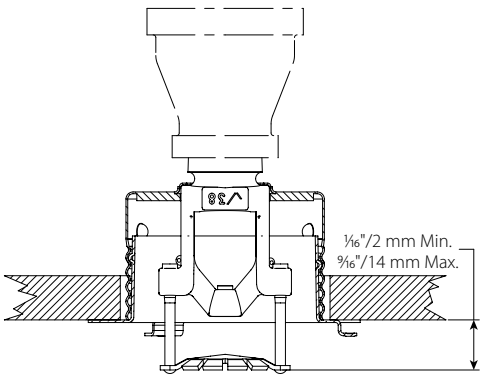

V3802, V3808

 © 2023 Victaulic Company. All rights reserved.

Victaulic® FireLock™ Series FL-QR
Standard Coverage, Quick Response
Upright, Pendent and Recessed Pendent Sprinklers
K2.8 (4.0), K4.2 (6.1), K5.6 (8.1), K8.0 (11.5)

41.01

1.0 PRODUCT DESCRIPTION

QUICK RESPONSE UPRIGHT SPRINKLERS				
SIN	**V2815**	**V4215**	**V2704**	**V3402**
ORIENTATION	UPRIGHT	UPRIGHT	UPRIGHT	UPRIGHT
K-FACTOR[1]	2.8 Imp./4.0 S.I.	4.2 Imp./6.1 S.I.	5.6 Imp./8.1 S.I.	8.0 Imp./11.5 S.I.
CONNECTION	½" NPT/15mm BSPT	½" NPT/15mm BSPT	½" NPT/15mm BSPT/IGS	¾" NPT/20mm BSPT/IGS
MAX. WORKING PRESSURE	175 psi/1200 kPa	175 psi/1200 kPa	175 psi/1200 kPa cULus 250 psi /1725 kPa	175 psi/1200 kPa
GLOBE RE-DESIGNATION	GL2815	GL4215	–	–
GLOBE EQUIVALENT	–	–	GL5615	GL8118

QUICK RESPONSE PENDENT SPRINKLERS				
SIN	**V2801**	**V4201**	**V2708**	**V3406**
ORIENTATION	PENDENT	PENDENT	PENDENT	PENDENT
K-FACTOR[1]	2.8 Imp./4.0 S.I.	4.2 Imp./6.1 S.I.	5.6 Imp./8.1 S.I.	8.0 Imp./11.5 S.I.
CONNECTION	½" NPT/15mm BSPT	½" NPT/15mm BSPT	½" NPT/15mm BSPT/IGS	¾" NPT/20mm BSPT/IGS
MAX. WORKING PRESSURE	175 psi /1200 kPa	175 psi /1200 kPa	175 psi /1200 kPa cULus 250 psi/1725 kPa	175 psi/1200 kPa
GLOBE RE-DESIGNATION	GL2801	GL4201	–	–
GLOBE EQUIVALENT	–	–	GL5601	GL8101

QUICK RESPONSE RECESSED PENDENT SPRINKLERS				
SIN	**V2801**	**V4201**	**V2708**	**V3406**
ORIENTATION	PENDENT	PENDENT	PENDENT	PENDENT
K-FACTOR[1]	2.8 Imp./4.0 S.I.	4.2 Imp./6.1 S.I.	5.6 Imp./8.1 S.I.	8.0 Imp./11.5 S.I.
CONNECTION	½" NPT/15mm BSPT	½" NPT/15mm BSPT	½" NPT/15mm BSPT/IGS	¾" NPT/20mm BSPT/IGS
MAX. WORKING PRESSURE	175 psi/1200 kPa	175 psi/1200 kPa	175 psi/1200 kPa cULus 250 psi/1725 kPa	175 psi/1200 kPa
ESCUTCHEON	Recessed	Recessed	Recessed	Recessed
GLOBE RE-DESIGNATION	GL2801	GL4201	–	–
GLOBE EQUIVALENT	–	–	GL5601	GL8101

AVAILABLE GUARDS/SHIELDS				
SPRINKLER	**V28**	**V42**	**V27**	**V34**
Upright			■	■
Pendent			■	■

AVAILABLE WRENCHES							
SPRINKLER	**V56-2 Recessed**	**V56 Open End**	**V27-2 Recessed**	**V27 Open End**	**V34-2 Recessed**	**V34 Open End**	**3/16 Hex-Bit**
V2815 and V4215		■					
V2707 and V2704				■			■
V3402						■	■
V2801, and V4201	■	■					
V2706 and V2708			■	■			■
V3406					■	■	■

[1] For K-Factor when pressure is measured in Bar, multiply S.I. units by 10.0.

Factory Hydrostatic Test: 100% @ 500 psi/3447 kPa/34 Bar
Min. Operating Pressure: UL/FM: 7 psi/48 kPa/.5 Bar
VdS: 5 psi/35 kPa/.35 Bar (Upright only)
Temperature Rating: See tables in section 2.0

ALWAYS REFER TO ANY NOTIFICATIONS AT THE END OF THIS DOCUMENT REGARDING PRODUCT INSTALLATION, MAINTENANCE OR SUPPORT.

 © 2024 Victaulic Company. All rights reserved.

2.0 CERTIFICATIONS/LISTINGS

0786 0832

UPRIGHT APPROVALS/LISTINGS				
SIN	**V2815**	**V4215**	**V2704**	**V3402**
Nominal K Factor Imperial	2.8	4.2	5.6	8.0
Nominal K Factor S.I.[2]	4.0	6.1	8.1	11.5
Orientation	UPRIGHT	UPRIGHT	UPRIGHT	UPRIGHT
	Approved Temperature Ratings F°/C°			
cULus	135°F/57°C 155°F/68°C 175°F/79°C 200°F/93°C 286°F/141°C	135°F/57°C 155°F/68°C 175°F/79°C 200°F/93°C 286°F/141°C	135°F/57°C 155°F/68°C 175°F/79°C 200°F/93°C 286°F/141°C	135°F/57°C 155°F/68°C 175°F/79°C 200°F/93°C 286°F/141°C
FM	–	–	135°F/57°C 155°F/68°C 175°F/79°C 200°F/93°C 286°F/141°C	135°F/57°C 155°F/68°C 175°F/79°C 200°F/93°C 286°F/141°C
LPCB/UKCA	–	–	135°F/57°C 155°F/68°C 175°F/79°C 200°F/93°C 286°F/141°C	135°F/57°C 155°F/68°C 175°F/79°C 200°F/93°C 286°F/141°C
VdS/CE	–	–	135°F/57°C 155°F/68°C 175°F/79°C 200°F/93°C 286°F/141°C	135°F/57°C 155°F/68°C 175°F/79°C 200°F/93°C 286°F/141°C
CCC K-ZSTZ	–	–	155°F/68°C 175°F/79°C 286°F/141°C	155°F/68°C 286°F/141°C

[2] For K-Factor when pressure is measured in Bar, multiply S.I. units by 10.

PENDENT APPROVALS/LISTINGS				
SIN	**V2801**	**V4201**	**V2708**	**V3406**
Nominal K Factor Imperial	2.8	4.2	5.6	8.0
Nominal K Factor S.I.[2]	4.0	6.1	8.1	11.5
Orientation	PENDENT	PENDENT	PENDENT	PENDENT
Escutcheon	Flush/Extended	Flush/Extended	Flush/Extended	Flush/Extended
	Approved Temperature Ratings F°/C°			
cULus	135°F/57°C 155°F/68°C 175°F/79°C 200°F/93°C 286°F/141°C	135°F/57°C 155°F/68°C 175°F/79°C 200°F/93°C 286°F/141°C	135°F/57°C 155°F/68°C 175°F/79°C 200°F/93°C 286°F/141°C	135°F/57°C 155°F/68°C 175°F/79°C 200°F/93°C 286°F/141°C
FM	–	–	135°F/57°C 155°F/68°C 175°F/79°C 200°F/93°C 286°F/141°C	135°F/57°C 155°F/68°C 175°F/79°C 200°F/93°C 286°F/141°C
CCC K-ZSTX	–	–	155°F/68°C 200°F/93°C 286°F/141°C	155°F/68°C 286°F/141°C

[2] For K-Factor when pressure is measured in Bar, multiply S.I. units by 10.

NOTES

- Reference the specific agency website listings for the most up-to-date certification information.
- Where cULus Listed, Polyester and VC-250 Coatings Listed as Corrosion Resistant (V3402 with VC-250 Only)
- Where FM Approved, VC-250 Coating Approved as Corrosion Resistant
- New York City Acceptance - All UL Listed and/or FM Approved sprinklers acceptable to NYC per section 28-113 of the Administrative Code and the OTCR Rule.

 © 2024 Victaulic Company. All rights reserved.

3.0 SPECIFICATIONS – MATERIAL

Deflector: Bronze

Bulb Nominal Diameter: 3.0 mm

Load Screw: Bronze

Pip Cap: Bronze

Spring Seal: PTFE coated Beryllium nickel alloy

Frame: Brass

Lodgement Spring: Stainless steel

Installation Wrench: Ductile iron

Sprinkler Frame Finishes:

- Plain brass
- Chrome plated
- White polyester painted[3, 4]
- Flat black polyester painted[3, 4]
- Custom polyester painted[3, 4]
- VC-250[5]

3 Not available on the Intermediate Level Style Pendent.

4 UL Listed for corrosion resistance.

5 UL Listed and FM Approved for corrosion resistance.

NOTE

- For cabinets and other accessories, refer to separate sheet.

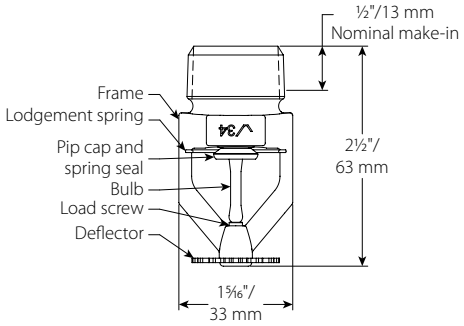

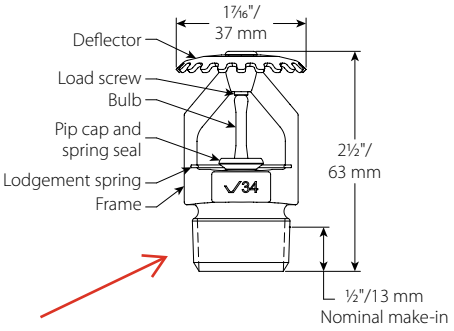

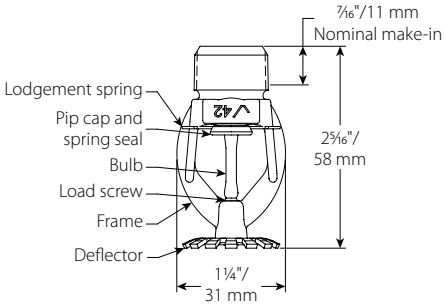

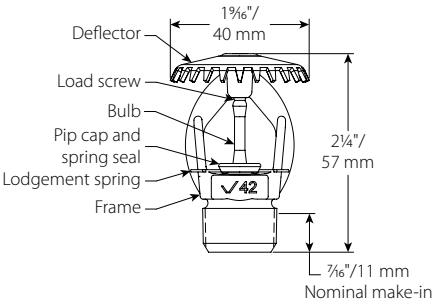

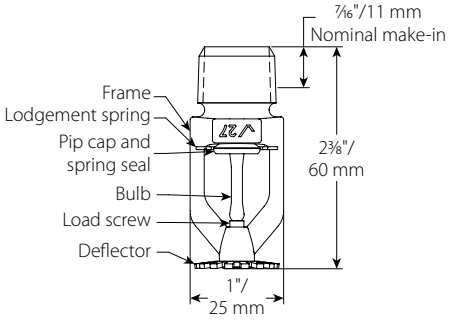

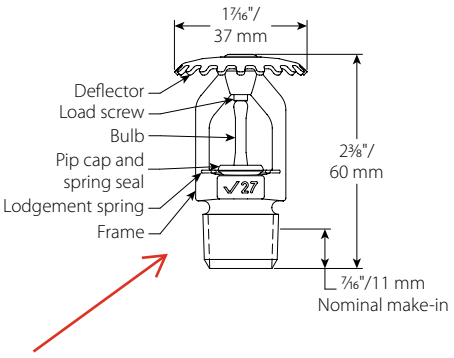

 © 2024 Victaulic Company. All rights reserved.

Victaulic® FireLock™ Series FL-QR/SW Standard Coverage, Quick Response Horizontal Sidewall and Recessed Horizontal Sidewall Sprinklers K2.8 (4.0), K4.2 (6.1), K5.6 (8.1), K8.0 (11.5)

1.0 PRODUCT DESCRIPTION

QUICK RESPONSE HORIZONTAL SIDEWALL				
SIN	**V2826**	**V4226**	**V2710**	**V3410**
ORIENTATION	Horizontal Sidewall	Horizontal Sidewall	Horizontal Sidewall	Horizontal Sidewall
K-FACTOR[1]	2.8 Imp./4.0 S.I.	4.2 Imp./6.1 S.I.	5.6 Imp./8.1 S.I.	8.0 Imp./11.5 S.I.
CONNECTION	½" NPT/15mm BSPT	½" NPT/15mm BSPT	½" NPT/15mm BSPT/IGS	¾" NPT/ 20mm BSPT/IGS
MAX. WORKING PRESSURE	175 psi/1200 kPa	175 psi/1200 kPa	175 psi/1200 kPa	175 psi/1200 kPa
GLOBE RE-DESIGNATION	GL2826	GL4226		
GLOBE EQUIVALENT			GL5626	GL8127

QUICK RESPONSE RECESSED HORIZONTAL SIDEWALL				
SIN	**V2826**	**V4226**	**V2710**	**V3410**
ORIENTATION	Horizontal Sidewall	Horizontal Sidewall	Horizontal Sidewall	Horizontal Sidewall
K-FACTOR[1]	2.8 Imp./4.0 S.I.	4.2 Imp./6.1 S.I.	5.6 Imp./8.1 S.I.	8.0 Imp./11.5 S.I.
CONNECTION	½" NPT/15mm BSPT	½" NPT/15mm BSPT	½" NPT/15mm BSPT	¾" NPT/ 20mm BSPT
MAX. WORKING PRESSURE	175 psi/1200 kPa	175 psi/1200 kPa	175 psi/1200 kPa	175 psi/1200 kPa
ESCUTCHEON	Recessed	Recessed	Recessed	Recessed
GLOBE RE-DESIGNATION	GL2826	GL4226		
GLOBE EQUIVALENT			GL5626	GL8127
AVAILABLE GUARDS				
SPRINKLER	**V28**	**V42**	**V27**	**V34**
Horizontal Sidewall			■	

AVAILABLE WRENCHES							
Sprinkler	**V56-2 Recessed**	**V56 Open End**	**V27-2 Recessed**	**V27 Open End**	**V34-2 Recessed**	**V34 Open End**	**3⁄16 Hex-Bit**
V2826 and V4226	■	■					
V2710			■	■			■
V3410					■	■	■

Factory Hydrostatic Test: 100% @ 500 psi/3447 kPa/34 bar

Min. Operating Pressure: UL/FM: 7psi/48 kPa/.5 bar

Temperature Rating: See tables in section 2.

[1] For K-Factor when pressure is measured in bar, multiply S.I. units by 10.0.

ALWAYS REFER TO ANY NOTIFICATIONS AT THE END OF THIS DOCUMENT REGARDING PRODUCT INSTALLATION, MAINTENANCE OR SUPPORT.

 © 2021 Victaulic Company. All rights reserved.

2.0 CERTIFICATION/LISTINGS

HORIZONTAL SIDEWALL APPROVALS/LISTINGS				
SIN	**V2826**	**V4226**	**V2710**	**V3410**
Nominal K Factor Imperial	2.8	4.2	5.6	8
Nominal K Factor S.I.[2]	4.0	6.1	8.1	11.5
Orientation	Horizontal Sidewall	Horizontal Sidewall	Horizontal Sidewall	Horizontal Sidewall
Escutcheon	Flush | Extended	Flush | Extended	Flush | Extended	Flush | Extended
	Approved Temperature Ratings F°/C°			
cULus 4" – 12" Deflector Distance	135°F/57°C 155°F/68°C 175°F/79°C 200°F/93°C 286°F/141°C	135°F/57°C 155°F/68°C 175°F/79°C 200°F/93°C 286°F/141°C	135°F/57°C 155°F/68°C 175°F/79°C 200°F/93°C 286°F/141°C	135°F/57°C 155°F/68°C 175°F/79°C 200°F/93°C 286°F/141°C
FM	–	–	135°F/57°C 155°F/68°C 175°F/79°C 200°F/93°C 286°F/141°C	–
LPCB	–	–	135°F/57°C 155°F/68°C 175°F/79°C 200°F/93°C 286°F/141°C	–
CE	–	–	135°F/57°C 155°F/68°C 175°F/79°C 200°F/93°C 286°F/141°C	–

RECESSED HORIZONTAL SIDEWALL APPROVALS/LISTINGS				
SIN	**V2826**	**V4226**	**V2710**	**V3410**
Nominal K Factor Imperial	2.8	4.2	5.6	8
Nominal K Factor S.I.[2]	4.0	6.1	8.1	11.5
Orientation	Horizontal Sidewall	Horizontal Sidewall	Horizontal Sidewall	Horizontal Sidewall
Escutcheon	RECESSED	RECESSED	RECESSED	RECESSED
	Approved Temperature Ratings F°/C°			
cULus 4" – 12" Deflector Distance ½" and ¾" Adjustment Escutcheon "	135°F/57°C 155°F/68°C 175°F/79°C 200°F/93°C 286°F/141°C	135°F/57°C 155°F/68°C 175°F/79°C 200°F/93°C 286°F/141°C	135°F/57°C 155°F/68°C 175°F/79°C 200°F/93°C	135°F/57°C 155°F/68°C 175°F/79°C 200°F/93°C
FM ½" Adjustment Escutcheon Only	–	–	135°F/57°C 155°F/68°C 175°F/79°C 200°F/93°C	–

[2] For K-Factor when pressure is measured in Bar, multiply S.I. units by 10.

NOTES

- Listings and approval as of printing.
- Where cULus Listed, Polyester and VC-250 Coatings Listed as Corrosion Resistant
- Where FM Approved, VC-250 Coating Approved as Corrosion Resistant
- New York City Acceptance - All UL Listed and/or FM Approved sprinklers acceptable to NYC per section 28-113 of the Administrative Code and the OTCR Rule

 © 2021 Victaulic Company. All rights reserved.

3.0 SPECIFICATIONS – MATERIAL

Deflector: Bronze
Bulb Nominal Diameter: 3.0mm
Load Screw: Bronze
Pip Cap: Bronze
Spring Seal: PTFE coated Beryllium nickel alloy
Frame: Brass
Lodgement Spring: Stainless steel
Installation Wrench: Ductile iron
Sprinkler Frame Finishes:

- Plain brass
- Chrome plated
- White polyester painted[3, 4]
- Flat black polyester painted[3, 4]
- Custom polyester painted[3, 4]
- VC-250[5]

3 Not available on the Intermediate Level Style Pendent.
4 UL Listed for corrosion resistance.
5 UL Listed and FM Approved for corrosion resistance.

NOTE

- For cabinets and other accessories refer to separate sheet.

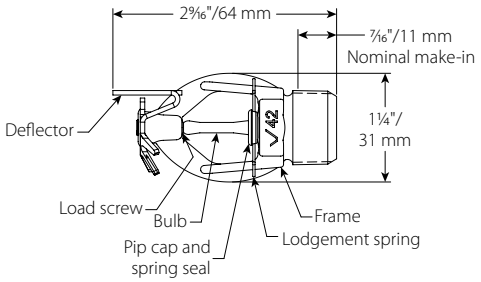

V2826, V4226

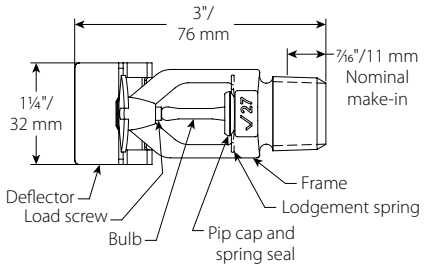

V2710

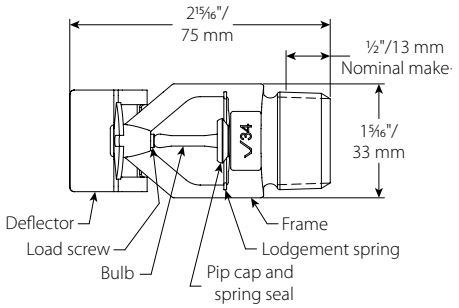

V3410

4.0 DIMENSIONS

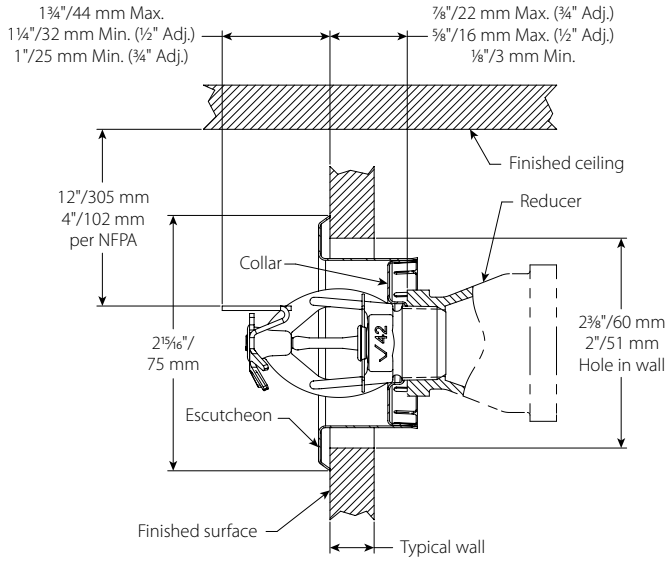

V2826, V4226

 © 2021 Victaulic Company. All rights reserved.

4.0 DIMENSIONS (CONTINUED)

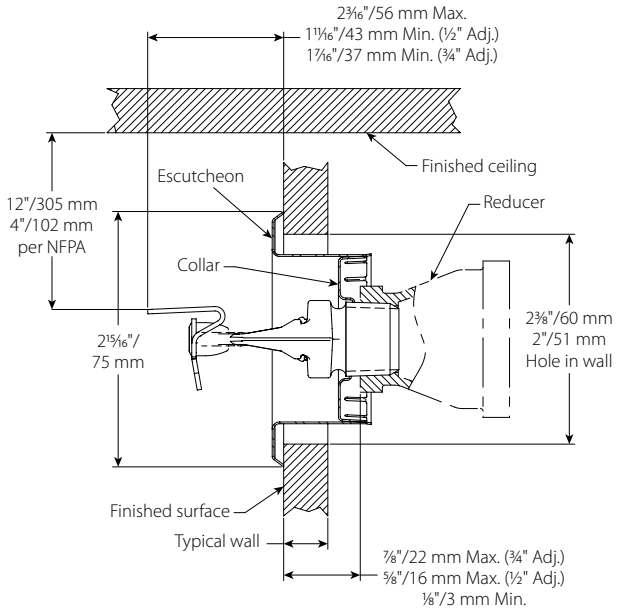

V2710

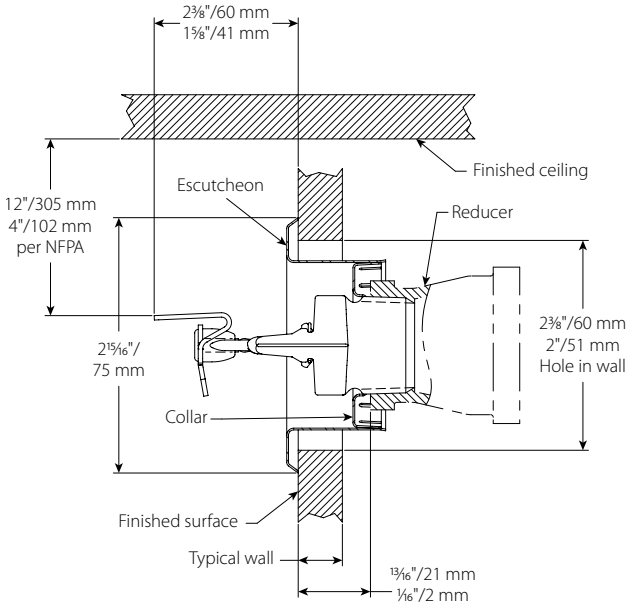

V3410

 © 2021 Victaulic Company. All rights reserved.

FireLock™ Series FL-QR/DRY
Standard Coverage, Quick Response Dry, Upright, Pendent and Recessed Pendent Sprinklers K5.6 (8.1), K8.0 (11.5)

45.01

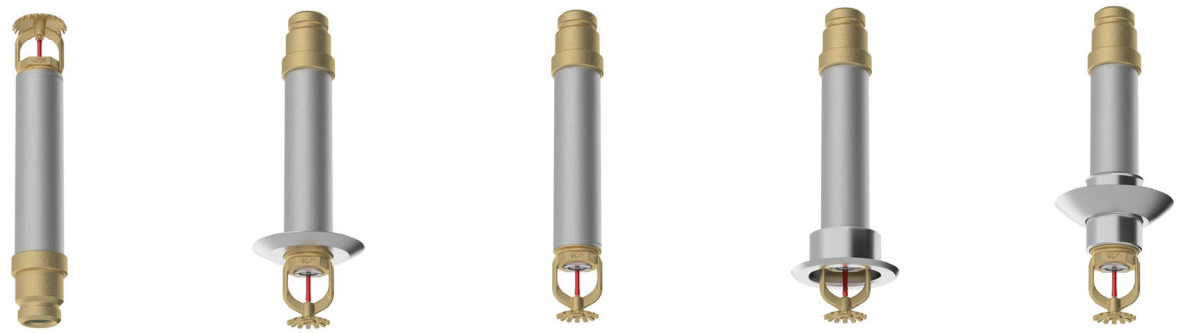

1.0 PRODUCT DESCRIPTION

UPRIGHT QUICK RESPONSE DRY SPRINKLERS		
SIN	**V3602**	**V3604**
ORIENTATION	UPRIGHT	UPRIGHT
K-FACTOR[1]	5.6 Imp./8.1 S.I.	8.0 Imp./11.5 S.I.
CONNECTION	1" NPT/25mm BSPT/1" IGS	1" NPT/25mm BSPT/1" IGS
MAX WORKING PRESSURE	175 psi (1200 kPa)	175 psi (1200 kPa)
ESCUTCHEON	Plain	Plain
GLOBE EQUIVALENT	GL5639	GL8139

PENDENT QUICK RESPONSE DRY SPRINKLERS		
SIN	**V3614**	**V3616**
ORIENTATION	PENDENT	PENDENT
K-FACTOR[1]	5.6 Imp./8.1 S.I.	8.0 Imp./11.5 S.I.
CONNECTION	1" NPT/25mm BSPT/1" IGS	1" NPT/25mm BSPT/1" IGS
MAX WORKING PRESSURE	175 psi (1200 kPa)	175 psi (1200 kPa)
ESCUTCHEON	Plain/Flush/Sleeve and Skirt/Extended	Plain/Flush/Sleeve and Skirt/Extended
GLOBE EQUIVALENT	GL5635	GL8135

RECESSED PENDENT QUICK RESPONSE DRY SPRINKLERS		
SIN	**V3614**	**V3616**
ORIENTATION	PENDENT	PENDENT
K-FACTOR[1]	5.6 Imp./8.1 S.I.	8.0 Imp./11.5 S.I.
CONNECTION	1" NPT/25mm BSPT/1" IGS	1" NPT/25mm BSPT/1" IGS
MAX WORKING PRESSURE	175 psi (1200 kPa)	175 psi (1200 kPa)
ESCUTCHEON	Recessed	Recessed
GLOBE EQUIVALENT	GL5635	GL8135

AVAILABLE GUARDS/SHIELDS			
SPRINKLER	**V34/V36**	**V36 Intermediate Shield**	**V34/V36 Int. Shield/Guard**
Upright	■		■
Pendent	■	■	

AVAILABLE WRENCHES			
Sprinkler	**V36 Recessed**	**V36 Open End**	**3/16 Hex Bit (V9)**
Upright		■	■
Pendent	■	■	■

Factory Hydrostatic Test: 100% @ 500 psi/3447 kPa/34 bar

Min. Operating Pressure: Pendent: 7 psi/48 kPa/.5 bar
Upright: 12 psi/83 kPa/0.8 bar

Temperature Rating: See tables in section 2.0

[1] For K-Factor when pressure is measured in bar, multiply S.I. units by 10.0.

ALWAYS REFER TO ANY NOTIFICATIONS AT THE END OF THIS DOCUMENT REGARDING PRODUCT INSTALLATION, MAINTENANCE OR SUPPORT.

 © 2024 Victaulic Company. All rights reserved.

2.0 CERTIFICATION/LISTINGS

APPROVALS/LISTINGS		
SIN	**V3602**	**V3604**
Nominal K Factor Imperial	5.6	8.0
Nominal K Factor S.I.[2]	8.1	11.5
Orientation	Upright	Upright
Escutcheon	Plain	Plain
	Approved Temperature Ratings F°/C°	
cULus	135°F/57°C 155°F/68°C 200°F/93°C 286°F/141°C	135°F/57°C 155°F/68°C 200°F/93°C 286°F/141°C
FM	135°F/57°C 155°F/68°C 200°F/93°C 286°F/141°C	135°F/57°C 155°F/68°C 200°F/93°C
CCC	155°F/68°C	–

APPROVALS/LISTINGS				
SIN	**V3614**	**V3616**	**V3614**	**V3616**
Nominal K Factor Imperial	5.6	8.0	5.6	8.0
Nominal K Factor S.I.[2]	8.1	11.5	8.1	11.5
Orientation	Pendent	Pendent	Pendent	Pendent
Escutcheon	Plain, Flush, Slv & Skt, Ext	Plain, Flush, Slv & Skt, Ext	Recessed	Recessed
	Approved Temperature Ratings F°/C°			
cULus	135°F/57°C 155°F/68°C 200°F/93°C 286°F/141°C	135°F/57°C 155°F/68°C 200°F/93°C 286°F/141°C	135°F/57°C 155°F/68°C 200°F/93°C 286°F/141°C	135°F/57°C 155°F/68°C 200°F/93°C 286°F/141°C
FM	135°F/57°C 155°F/68°C 200°F/93°C 286°F/141°C	135°F/57°C 155°F/68°C 200°F/93°C 286°F/141°C	135°F/57°C 155°F/68°C 200°F/93°C	135°F/57°C 155°F/68°C 200°F/93°C
CCC	155°F/68°C 200°F/93°C 286°F/141°C	155°F/68°C 200°F/93°C 286°F/141°C	155°F/68°C 200°F/93°C 286°F/141°C	155°F/68°C 200°F/93°C 286°F/141°C
CE	135°F/57°C 155°F/68°C 200°F/93°C 286°F/141°C	135°F/57°C 155°F/68°C 200°F/93°C 286°F/141°C	135°F/57°C 155°F/68°C 200°F/93°C	135°F/57°C 155°F/68°C 200°F/93°C

[2] For K-Factor when pressure is measured in Bar, multiply S.I. units by 10.

NOTES

- Listings and approval as of printing.
- Temperatures are UL Listed for ordinary hazards for V3614 and V3616 dry sprinklers up to 48"/1219mm length.
- CCCf approved for V3614 and V3616 dry sprinklers 79 to 1304 mm/3.1 – 51.3" in length.
- V3616 dry sprinklers are FM-Approved and CE-certified from 5" (127mm) to 30" (762mm) length.
- V3614 and V3616 dry sprinklers with IGS connections are for wet system installation or dry/preaction systems in spaces maintained at 40˚F/5˚C or greater.

 © 2024 Victaulic Company. All rights reserved.

3.0 SPECIFICATIONS – MATERIAL

Deflector: Stainless Steel

Bulb Nominal Diameter: 3.0mm

Split Spacer: Stainless Steel

Load Screw: Brass

Pip Cap: Stainless Steel

Spring Seal Assembly: PTFE coated Beryllium nickel alloy and stainless steel

Frame: Brass

Inlet Fitting: Brass

Outer Tube: Galvanized steel pipe

Inner Tube: Stainless Steel

Orifice Insert: Stainless Steel

Escutcheon/Plate: 1010 - 1018 mild steel and stainless steel

Torsion Spring: SST wire

Installation Wrench: Ductile iron

Sprinkler Frame Finishes:

- Plain brass
- Chrome plated
- White painted[3, 4]
- Bright White painted[3, 4]
- Flat black painted[3, 4]
- Custom painted[3, 4]
- VC-250[5]

3 Not available on the Intermediate Level Style Pendent.

4 UL Listed for corrosion resistance.

5 UL Listed, FM Approved, and CE-certified for corrosion resistance.

NOTES

- Weather resistant escutcheon available upon request.
- For cabinets and other accessories refer to separate sheet.

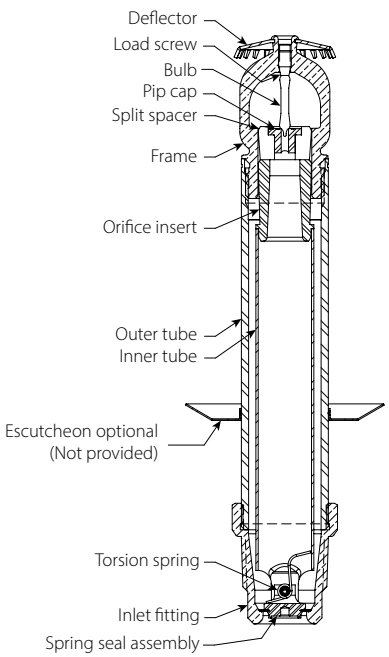

Material Specifications
V3602, V3604

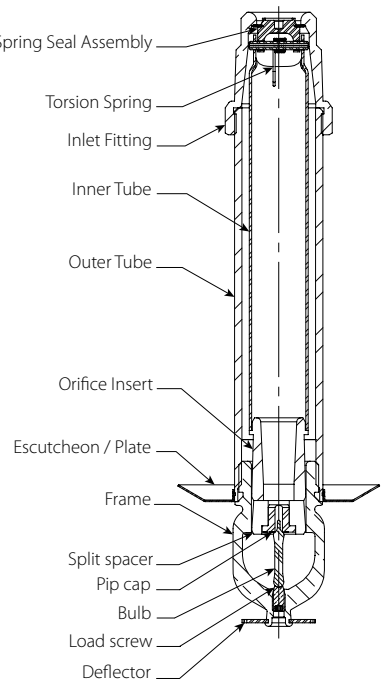

Material Specifications
V3614, V3616

 © 2024 Victaulic Company. All rights reserved.

4.0 DIMENSIONS (CONTINUED)

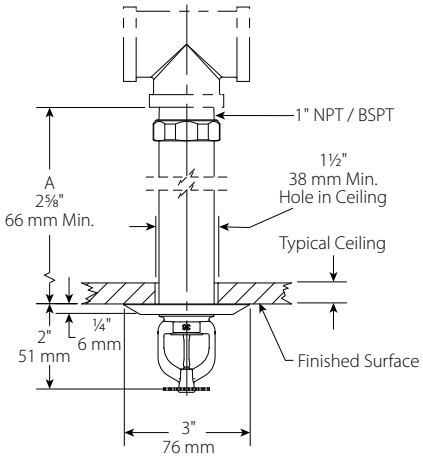

Flush, Threaded
V3614, V3616

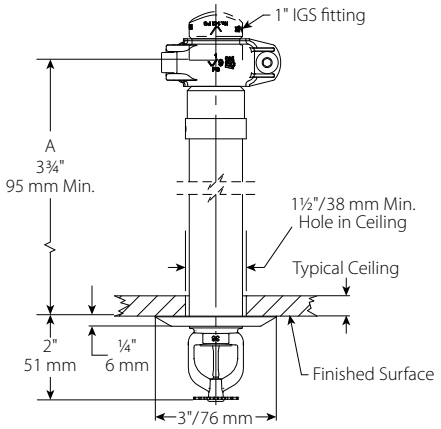

Flush, Grooved
V3614, V3616

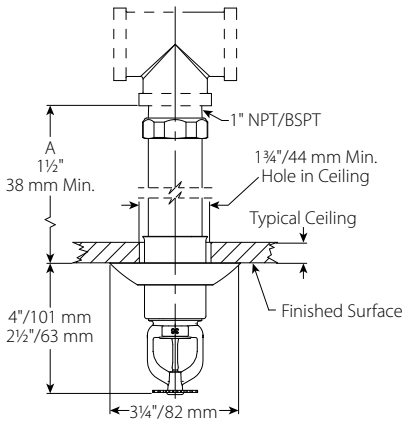

Sleeve and Skirt, Threaded
V3614, V3616

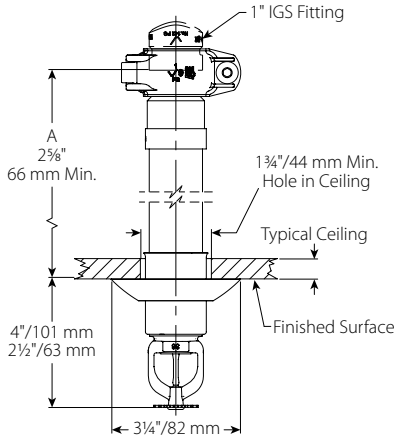

Sleeve and Skirt, Grooved
V3614, V3616

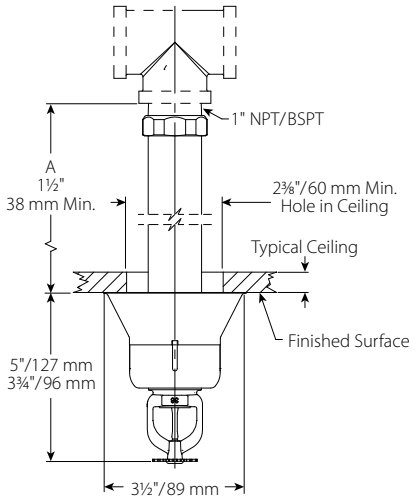

Extended
Sleeve and Skirt, Threaded
V3614, V3616

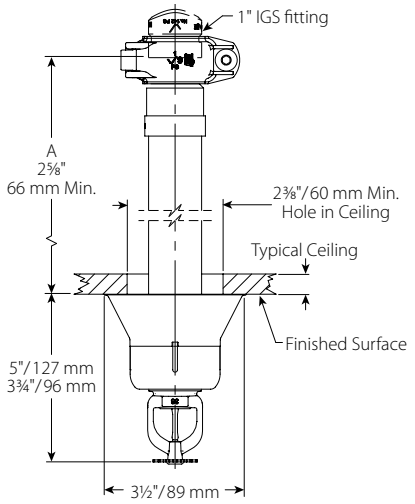

Extended
Sleeve and Skirt, Grooved
V3614, V3616

 © 2024 Victaulic Company. All rights reserved.

6.0 NOTIFICATIONS

WARNING

- **Read and understand all instructions before attempting to install any Victaulic products.**
- **Always verify that the piping system has been completely depressurized and drained immediately prior to installation, removal, adjustment, or maintenance of any Victaulic products.**
- **Wear safety glasses, hardhat, and foot protection.**

Failure to follow these instructions could result in death or serious personal injury and property damage.

- **These products shall be used only in fire protection systems that are designed and installed in accordance with current, applicable National Fire Protection Association (NFPA 13, 13D, 13R, etc.) standards, or equivalent standards, and in accordance with applicable building and fire codes. These standards and codes contain important information regarding protection of systems from freezing temperatures, corrosion, mechanical damage, etc.**
- **The installer shall understand the use of this product and why it was specified for the particular application.**
- **The installer shall understand common industry safety standards and potential consequences of improper product installation.**
- **It is the system designer's responsibility to verify suitability of materials for use with the intended fluid media within the piping system and external environment.**
- **The material specifier shall evaluate the effect of chemical composition, pH level, operating temperature, chloride level, oxygen level, and flow rate on materials to confirm system life will be acceptable for the intended service.**

Failure to follow installation requirements and local and national codes and standards could compromise system integrity or cause system failure, resulting in death or serious personal injury and property damage.

7.0 REFERENCE MATERIALS

Ratings: All glass bulbs are rated for temperatures from -67°F/-55°C.

1-40: Victaulic FireLock™ Automatic Sprinklers Installation and Maintenance Instructions

I-V9: Style V9 Victaulic FireLock™ IGS™ Installation-Ready™ Sprinkler Coupling Installation Instructions

User Responsibility for Product Selection and Suitability
Each user bears final responsibility for making a determination as to the suitability of Victaulic products for a particular end-use application, in accordance with industry standards and project specifications, as well as Victaulic performance, maintenance, safety, and warning instructions. Nothing in this or any other document, nor any verbal recommendation, advice, or opinion from any Victaulic employee, shall be deemed to alter, vary, supersede, or waive any provision of Victaulic Company's standard conditions of sale, installation guide, or this disclaimer.

Intellectual Property Rights
No statement contained herein concerning a possible or suggested use of any material, product, service, or design is intended, or should be constructed, to grant any license under any patent or other intellectual property right of Victaulic or any of its subsidiaries or affiliates covering such use or design, or as a recommendation for the use of such material, product, service, or design in the infringement of any patent or other intellectual property right. The terms "Patented" or "Patent Pending" refer to design or utility patents or patent applications for articles and/or methods of use in the United States and/or other countries.

Note
This product shall be manufactured by Victaulic or to Victaulic specifications. All products to be installed in accordance with current Victaulic installation/assembly instructions. Victaulic reserves the right to change product specifications, designs and standard equipment without notice and without incurring obligations.

Installation
Reference should always be made to the Victaulic installation handbook or installation instructions of the product you are installing. Handbooks are included with each shipment of Victaulic products, providing complete installation and assembly data, and are available in PDF format on our website at www.victaulic.com.

Warranty
Refer to the Warranty section of the current Price List or contact Victaulic for details.

Trademarks
Victaulic and all other Victaulic marks are the trademarks or registered trademarks of Victaulic Company, and/or its affiliated entities, in the U.S. and/or other countries.

 © 2023 Victaulic Company. All rights reserved.

Worldwide Contacts | www.tyco-fire.com

Series DS-8 – 8.0 K-factor, Dry-Type Sprinklers Pendent and Horizontal Sidewall Standard Response, Standard Coverage

IMPORTANT

Refer to Technical Data Sheet TFP2300 for warnings pertaining to regulatory and health information.

Always refer to Technical Data Sheet TFP700 for the "INSTALLER WARNING" that provides cautions with respect to handling and installation of sprinkler systems and components. Improper handling and installation can permanently damage a sprinkler system or its components and cause the sprinkler to fail to operate in a fire situation or cause it to operate prematurely.

Scan the QR code or enter the URL in a web browser to access the most up-to-date electronic version of this document. Data rates may apply.

docs.jci.com/tycofire/tfp503

General Description

The TYCO Series DS-8 8.0 K-factor, Pendent and Horizontal Sidewall (HSW), Standard Response, Standard Coverage Dry-Type Sprinklers are stainless steel sprinklers listed by UL and C-UL. The standard response bulb size is 5 mm. For information about the Series DS-8 Quick Response (3 mm bulb) sprinklers, see technical data sheet TFP513.

Use the sprinklers in wet-pipe, dry-pipe, or preaction systems based on the following criteria:

- On dry pipe systems that are exposed to freezing temperatures, for example, sprinkler drops from unheated portions of buildings
- When sprinklers and/or a portion of the connecting piping may be exposed to freezing temperatures, for example, sprinkler drops from wet systems into freezers, sprinkler sprigs from wet systems into unheated attics, or horizontal piping extensions through a wall to protect unheated areas of a building such as loading docks, overhangs, and building exteriors
- On systems that are seasonably drained to avoid freezing, for example, vacation resort areas

NOTICE

The TYCO Series DS-8 Dry-Type Sprinklers described herein must be installed and maintained in compliance with this document, as well as with the applicable standards of the NATIONAL FIRE PROTECTION ASSOCIATION (NFPA), in addition to the standards of any other authorities having jurisdiction. Failure to do so may impair the performance of these devices.

The owner is responsible for maintaining their fire protection system and devices in proper operating condition. Contact the installing contractor or product manufacturer with any questions.

Series DS-8 Dry-Type Sprinklers must only be installed in fittings that meet the requirements of the Design Criteria section.

Sprinkler Identification Number (SIN)

TY4255 . . . . . Pendent
TY4355 . . . . . Horizontal Sidewall

Technical Data

Approvals
UL and C-UL Listed

Note: *For more information, see Table A and Table B.*

Maximum Working Pressure
175 psi (12,1 bar)

Inlet Thread Connections
1 in. NPT
ISO 7-R 1

Discharge Coefficient
K=8.0 gpm/psi$^{1/2}$ (115,2 lpm/bar$^{1/2}$)

Temperature Ratings
See Table A and Table B

Finishes
Sprinkler: See Table D
Escutcheon: See Table D

Physical Characteristics

Inlet	Brass
Plug	Brass
Yoke	Stainless Steel
Casing	Galvanized Carbon Steel
Bulb Seat	Stainless Steel
Bulb (5 mm dia.)	Glass
Compression Screw	Brass
Deflector	Bronze
Frame	Brass
Guide Tube	Stainless Steel
Water Tube	Stainless Steel
Spring	Stainless Steel
Sealing Assembly	Beryllium Nickel w/TEFLON
Escutcheon	Brass Plated, Chrome Plated Polyester, or Stainless Steel

Sprinkler Type	Escutcheon Type	Temperature Rating	Bulb Liquid Color	Sprinkler Finish		
				Natural Brass	Chrome Plated	Polyester
Pendent (TY4255)	Standard	155°F (68°C)	Red	1, 2		1, 2
		175°F (79°C)	Yellow			
		200°F (93°C)	Green			
		286°F (141°C)	Blue			
		360°F (182°C)	Mauve			
	Recessed	155°F (68°C)	Red	1, 2		1, 2
		175°F (79°C)	Yellow			
		200°F (93°C)	Green			
		286°F (141°C)	Blue			
		360°F (182°C)	Mauve	N/A		N/A
	Deep	155°F (68°C)	Red	1, 2		1, 2
		175°F (79°C)	Yellow			
		200°F (93°C)	Green			
		286°F (141°C)	Blue			
		360°F (182°C)	Mauve			
	Without	155°F (68°C)	Red	1, 2		1, 2
		175°F (79°C)	Yellow			
		200°F (93°C)	Green			
		286°F (141°C)	Blue			
		360°F (182°C)	Mauve			

Notes:
1. Listed by Underwriters Laboratories, Inc. (UL), maximum order length of 48 in. 2. Listed by Underwriters Laboratories for use in Canada (C-UL), maximum order length of 48 in.

TABLE A
SERIES DS-8 DRY-TYPE SPRINKLERS, 8.0K, PENDENT, STANDARD RESPONSE
LABORATORY LISTINGS AND APPROVALS

Sprinkler Type	Escutcheon Type	Temperature Rating	Bulb Liquid Color	Sprinkler Finish		
				Natural Brass	Chrome Plated	Polyester
Horizontal Sidewall (TY4355)	Standard	155°F (68°C)	Red	1, 2		1, 2
		200°F (93°C)	Green			
		286°F (141°C)	Blue			
	Recessed	155°F (68°C)	Red	1, 2		1, 2
		200°F (93°C)	Green			
		286°F (141°C)	Blue			
	Deep	155°F (68°C)	Red	1, 2		1, 2
		200°F (93°C)	Green			
		286°F (141°C)	Blue			
	Without	155°F (68°C)	Red	1, 2		1, 2
		200°F (93°C)	Green			
		286°F (141°C)	Blue			

Notes:
1. Listed by Underwriters Laboratories, Inc. (UL), maximum order length of 48 in. 2. Listed by Underwriters Laboratories for use in Canada (C-UL), maximum order length of 48 in.

TABLE B
SERIES DS-8 DRY-TYPE SPRINKLERS, 8.0K, HORIZONTAL SIDEWALL, STANDARD RESPONSE
LABORATORY LISTINGS AND APPROVALS

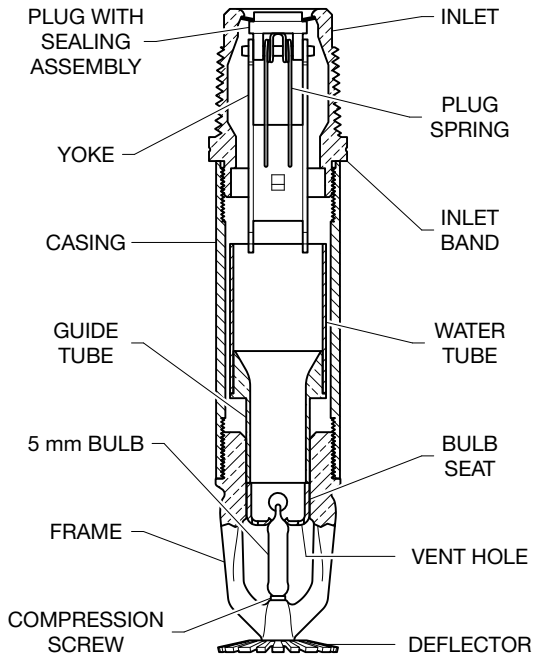

FIGURE 1
SERIES DS-8 PENDENT DRY-TYPE SPRINKLER, 8.0K, STANDARD RESPONSE ASSEMBLY

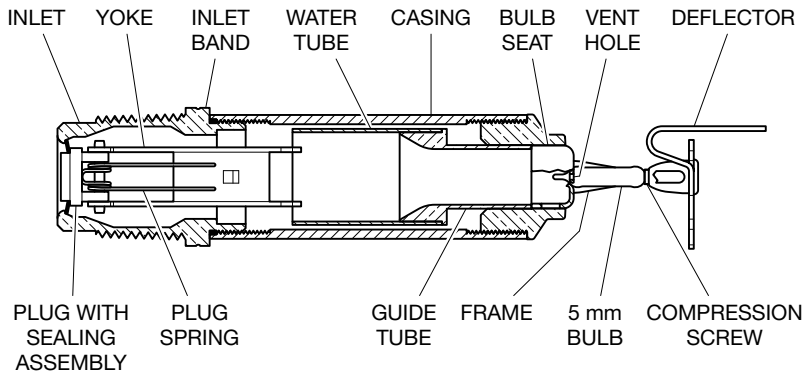

FIGURE 2
SERIES DS-8 HORIZONTAL SIDEWALL DRY-TYPE SPRINKLER, 8.0K, STANDARD RESPONSE ASSEMBLY

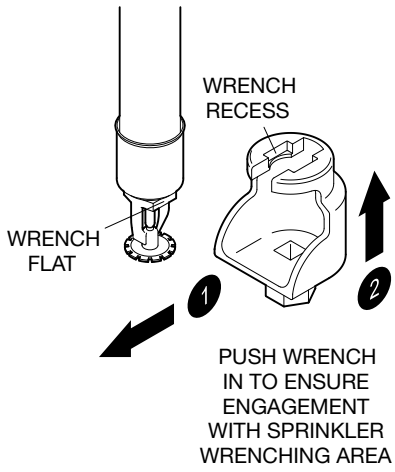

FIGURE 3
W-TYPE 7 WRENCH

Ambient Temperature Exposed to Discharge End of Sprinkler	Temperatures for Heated Area[1]		
	40°F (4°C)	50°F (10°C)	60°F (16°C)
	Minimum Exposed Barrel Length[2], in. (mm)		
40°F (4°C)	0	0	0
30°F (-1°C)	0	0	0
20°F (-7°C)	4 (100)	0	0
10°F (-12°C)	8 (200)	1 (25)	0
0°F (-18°C)	12 (305)	3 (75)	0
-10°F (-23°C)	14 (355)	4 (100)	1 (25)
-20°F (-29°C)	14 (355)	6 (150)	3 (75)
-30°F (-34°C)	16 (405)	8 (200)	4 (100)
-40°F (-40°C)	18 (455)	8 (200)	4 (100)
-50°F (-46°C)	20 (510)	10 (255)	6 (150)
-60°F (-51°C)	20 (510)	10 (255)	6 (150)

Notes:
1. For protected area temperatures that occur between values listed above, use the next cooler temperature.
2. These lengths are inclusive of wind velocities up to 30 mph (18,6 kph).

TABLE C
EXPOSED SPRINKLER BARRELS IN WET PIPE SYSTEMS MINIMUM RECOMMENDED LENGTHS

Operation

When TYCO Series DS-8 8.0K Pendent and Horizontal Sidewall, Standard Response, Standard Coverage Dry-Type Sprinklers are in service, water is prevented from entering the assembly by the plug with sealing assembly as shown in Figure 1 and Figure 2 in the Inlet of the sprinkler.

The glass bulb contains a fluid that expands when exposed to heat. When the rated temperature is reached, the fluid expands sufficiently to shatter the glass bulb, and the bulb seat is released.

Once the bulb seat is released, the compression holding the sealing assembly is released. The Spring is then able to flip off to the side and out of the waterway. This action pushes the water tube as well as the guide tube outward. This action allows the sprinkler to activate and water to flow.

Design Criteria

TYCO Series DS-8 8.0K Pendent and Horizontal Sidewall, Standard Response, Standard Coverage Dry-Type Sprinklers are intended for use in fire sprinkler systems designed in accordance with the standard installation rules recognized by the applicable listing or approval agency. For example, the UL Listing is based on NFPA 13 requirements.

Sprinkler Fittings
Install 1 in. NPT Series DS-8 Dry-Type Sprinklers in the 1 in. NPT outlet or run of the following fittings:

- Malleable or ductile iron threaded tee fittings that meet the dimensional requirements of ANSI B16.3 (Class 150)
- Cast iron threaded tee fittings that meet the dimensional requirements of ANSI B16.4 (Class 125)

Do not install sprinklers into elbow fittings. The inlet of the sprinkler can contact the interior of the elbow.

The unused outlet of the threaded tee is plugged as shown in Figure 13.

You can also install Series DS-8 Dry-Type Sprinklers in the 1 in. NPT outlet of a GRINNELL Figure 730 Mechanical Tee and GRINNELL G-FIRE Figure 522; however, the use of the Figure 730 Tee and Figure 522 for this arrangement is limited to wet pipe systems.

The configuration shown in Figure 14 is only applicable for wet pipe systems where the sprinkler fitting and water-filled pipe above the sprinkler fitting are not subject to freezing and where the length of the dry-type sprinkler has the minimum exposure length depicted in Figure 12. See the Exposure Length section.

For wet pipe system installations of 1 in. NPT Series DS-8 Dry-Type Sprinklers connected to CPVC piping, use the following CPVC fittings:

- 1 in. x 1 in. NPT female adapter
- 1 in. x 1 in. x 1 in. NPT sprinkler head adapter tee

Note: *For more information on specific CPVC fitting design and installation criteria, refer to CPVC manufacturer.*

For dry pipe system installations, use only the side outlet of maximum 2 1/2 in. reducing tee when locating Series DS-8 Dry-Type Sprinklers directly below the branchline; otherwise, use the configuration shown in Figure 13 to assure complete water drainage from above Series DS-8 Dry-Type Sprinklers and the branchline. Failure to do so may result in pipe freezing and water damage.

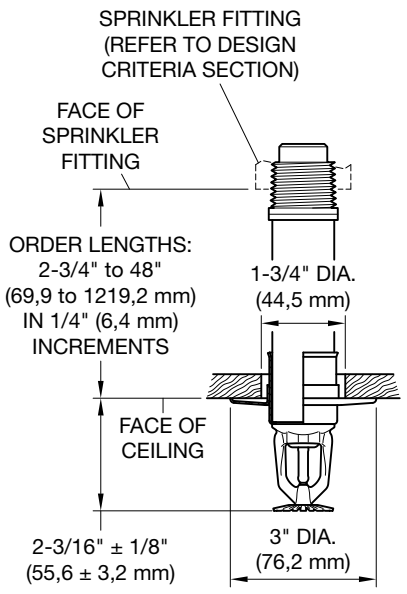

FIGURE 4
PENDENT
WITH STANDARD ESCUTCHEON

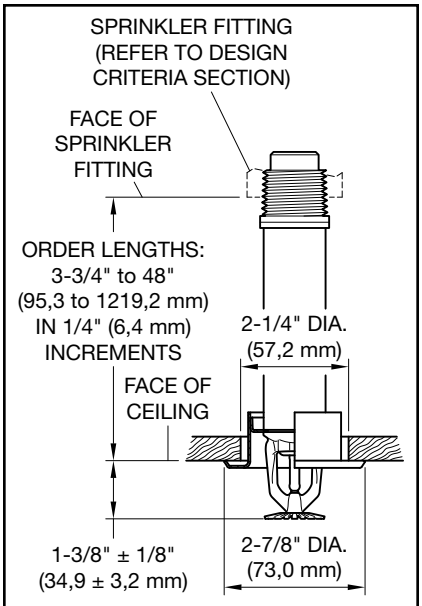

FIGURE 5
PENDENT
WITH STANDARD
RECESSED ESCUTCHEON

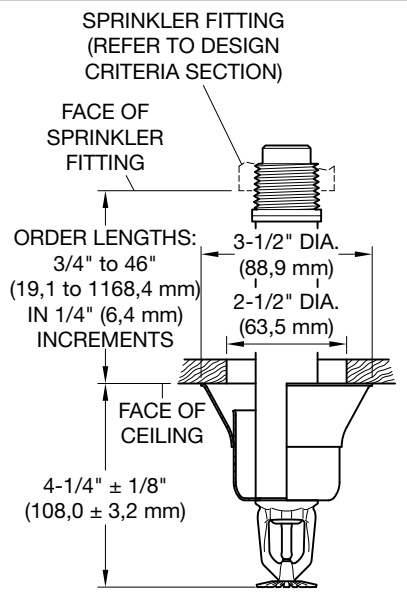

FIGURE 6
PENDENT
WITH DEEP ESCUTCHEON

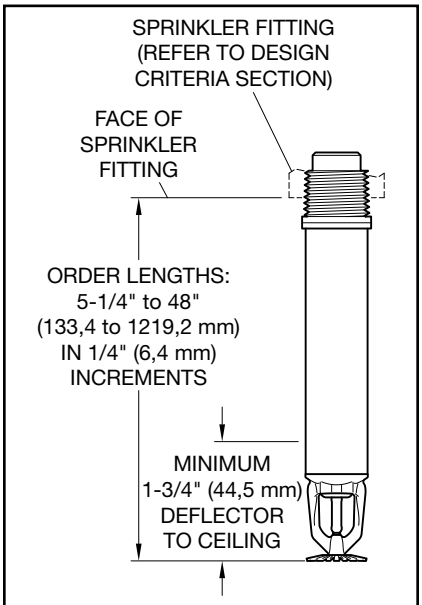

FIGURE 7
PENDENT
WITHOUT ESCUTCHEON

NOTICE

Do not install Series DS-8 Dry-Type Sprinklers into any other type fitting without first consulting the JOHNSON CONTROLS INC. (JCI) Technical Services. Failure to use the appropriate fitting may result in one of the following:

- *Failure of the sprinkler to operate properly due to formation of ice over the inlet plug or binding of the inlet plug.*
- *Insufficient engagement of the Inlet pipe-threads with consequent leakage.*

Drainage

In accordance with the minimum requirements of the NATIONAL FIRE PROTECTION ASSOCIATION for dry pipe sprinkler systems, branch, cross, and feed-main piping connected to dry-type sprinklers and subject to freezing temperatures must be pitched for proper drainage.

Exposure Length

When using dry-type sprinklers in wet pipe sprinkler systems to protect areas subject to freezing temperatures, use Table C to determine a sprinkler's appropriate exposed barrel length to prevent water from freezing in the connecting pipes due to conduction. The exposed barrel length measurement must be taken from the face of the sprinkler fitting to the surface of the structure or insulation that is exposed to the heated area as shown in Figure 12.

For protected area temperatures between those given on the next page, the minimum recommended length from the face of the fitting to the outside of the protected area may be determined by interpolating between the indicated values.

Clearance Space

In accordance with NFPA 13, when connecting an area subject to freezing and an area containing a wet pipe sprinkler system, the clearance space around the sprinkler barrel of dry-type sprinklers must be sealed. Due to temperature differences between two areas, the potential for the formation of condensation in the sprinkler and subsequent ice build-up is increased. If this condensation is not controlled, ice build-up can occur that might damage the dry-type sprinkler and/or prevent proper operation in a fire situation.

Use of the Model DSB-2 Dry-Type Sprinkler Boot, as described in technical data sheet TFP591, and as shown in Figure 15 and Figure 16, can provide the recommended seal.

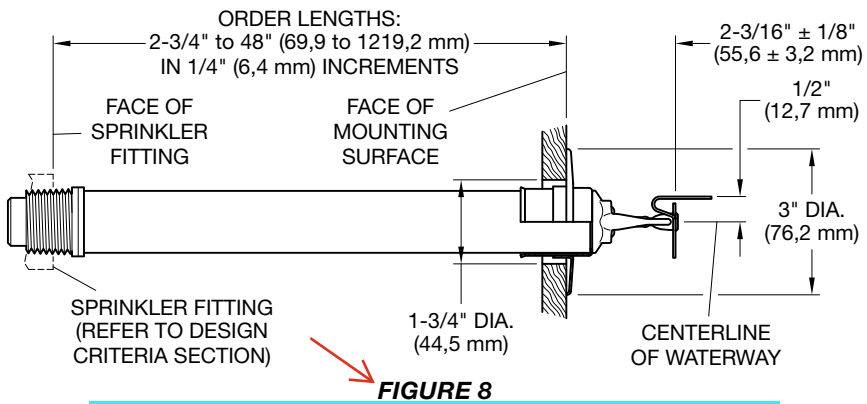

FIGURE 8
HORIZONTAL SIDEWALL WITH STANDARD ESCUTCHEON

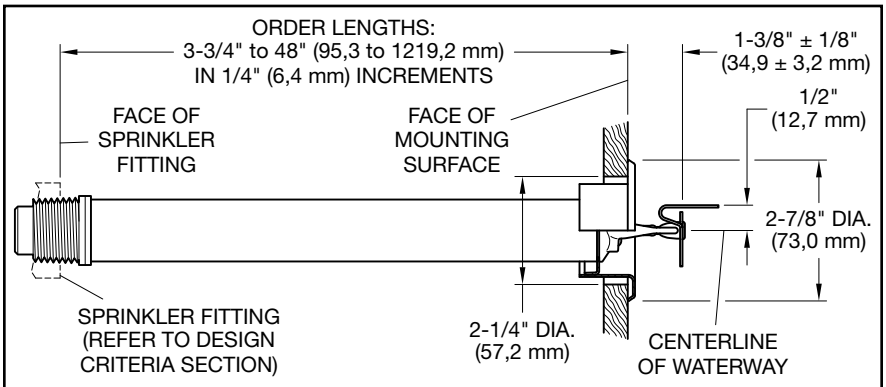

FIGURE 9
HORIZONTAL SIDEWALL WITH STANDARD RECESSED ESCUTCHEON

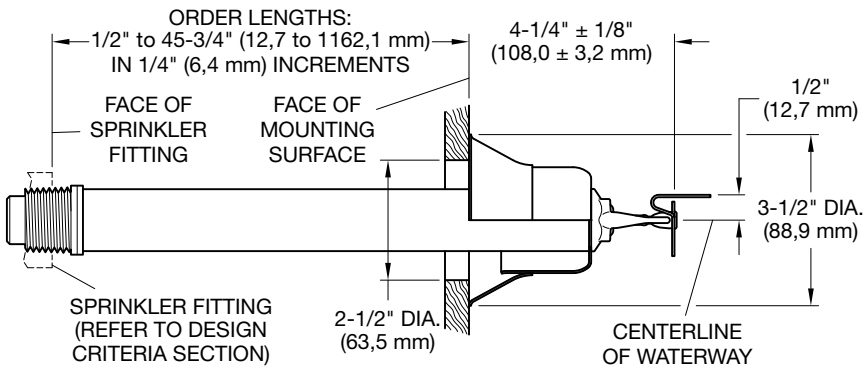

FIGURE 10
HORIZONTAL SIDEWALL WITH DEEP ESCUTCHEON

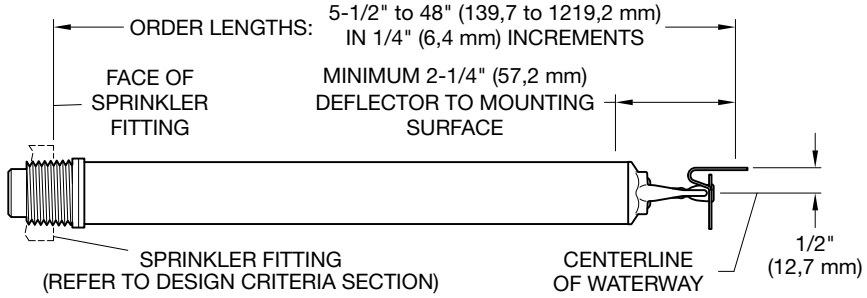

FIGURE 11
HORIZONTAL SIDEWALL WITHOUT ESCUTCHEON

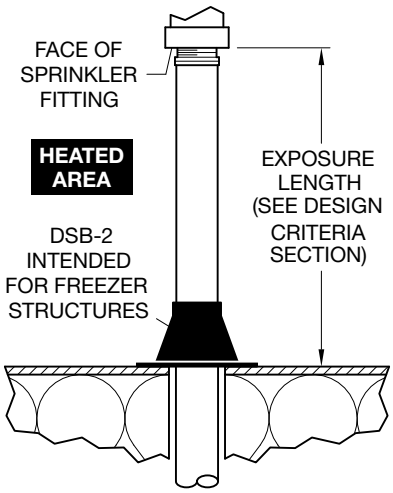

FIGURE 12
EXPOSURE LENGTH

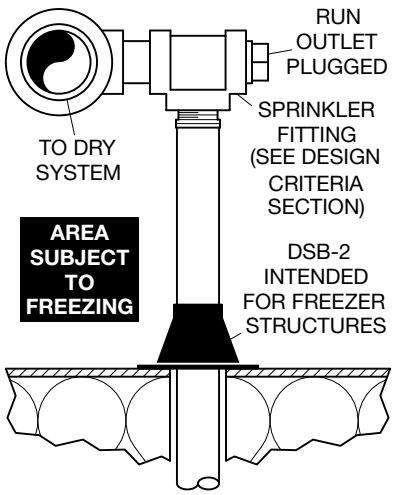

FIGURE 13
SPRINKLER FITTING
UNHEATED AREA

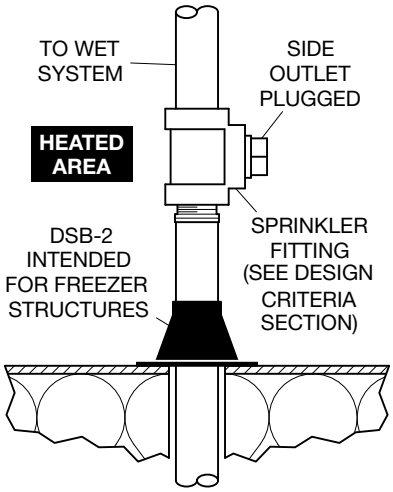

FIGURE 14
SPRINKLER FITTING
HEATED AREA

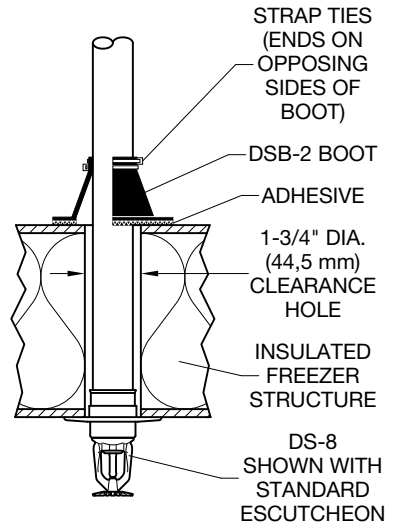

FIGURE 15
MODEL DSB-2 DRY SPRINKLER
BOOT WITH PENDENT SERIES
DS-8 DRY-TYPE SPRINKLER

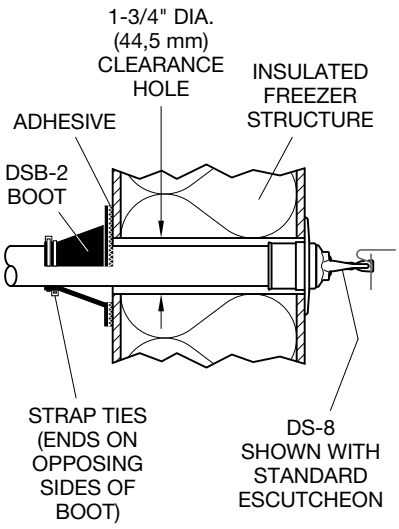

FIGURE 16
MODEL DSB-2 DRY SPRINKLER
BOOT WITH HORIZONTAL
SIDEWALL SERIES
DS-8 DRY-TYPE SPRINKLER

Installation

TYCO Series DS-8 8.0K Pendent and Horizontal Sidewall, Standard Response, Standard Coverage Dry-Type Sprinklers must be installed in accordance with this section.

General Instructions
Series DS-8 Dry-Type Sprinklers must only be installed in fittings that meet the requirements of the Design Criteria section. See the Design Criteria section for other important requirements regarding piping design and sealing of the clearance space around the sprinkler casing.

Do not install any bulb-type sprinkler if the bulb is cracked or there is a loss of liquid from the bulb. With the sprinkler held horizontally, a small air bubble should be present. The diameter of the air bubble is approximately 1/16 in. (1,6 mm) for the 155°F (68°C) rating to 1/8 in. (3,2 mm) for the 360°F (182°C) rating.

Obtain a leak-tight 1 in. NPT sprinkler joint by applying a minimum-to-maximum torque of 20 lb-ft to 30 lb-ft (26,8 N·m to 40,2 N·m). Higher levels of torque may distort the sprinkler Inlet with consequent leakage or impairment of the sprinkler.

Do not attempt to compensate for insufficient adjustment in an escutcheon plate by under or over-tightening the sprinkler. Re-adjust the position of the sprinkler fitting to suit.

Note: *Install pendent sprinklers only in the pendent position. The deflector of a pendent sprinkler is to be parallel to the ceiling.*

Step 1. With a non-hardening pipe-thread sealant such as TEFLON applied to the inlet threads, hand-tighten the sprinkler into the sprinkler fitting.

Step 2. Wrench-tighten the sprinkler using either of the following tools:

- Pipe wrench on the inlet band or the casing, see Figure 1 and Figure 2
- W-Type 7 Sprinkler Wrench on the wrench flat, see Figure 3

Apply the wrench recess of the W-Type 7 Sprinkler Wrench to the wrench flat.

Note: *If sprinkler removal becomes necessary, remove the sprinkler using the same wrenching method noted above. Sprinkler removal is easier when a non-hardening sealant was used and torque guidelines were followed. After removal, inspect the sprinkler for damage.*

Step 3. After installing the ceiling or wall and applying a ceiling finish, slide on the outer piece of the escutcheon until it comes in contact with the ceiling/wall. Do not lift the ceiling panel out of its normal position.

When using the deep escutcheon, hold the outer piece in contact with the mounting surface (ceiling or wall). Then rotate the inner piece approximately 1/4 turn with respect to the outer piece, to hold the deep escutcheon firmly together.

Care and Maintenance

TYCO Series DS-8 8.0K Pendent and Horizontal Sidewall, Standard Response, Standard Coverage Dry-Type Sprinklers must be maintained and serviced in accordance with this section.

Before closing a fire protection system main control valve for maintenance work on the fire protection system that it controls, obtain permission to shut down the affected fire protection systems from the proper authorities and notify all personnel who may be affected by this action.

Absence of the outer piece of an escutcheon, which is used to cover a clearance hole, may delay the time to sprinkler operation in a fire situation.

A vent hole is provided in the bulb seat as shown in Figure 1 and Figure 2 to indicate if the dry sprinkler is remaining dry. Evidence of leakage from the vent hole indicates potential leakage past the Inlet seal and the need to remove the sprinkler to determine the cause of leakage; for example, an improper installation or an ice plug. Close the fire protection system control valve and drain the system before removing the sprinkler.

Sprinklers which are found to be leaking or exhibiting visible signs of corrosion must be replaced.

Automatic sprinklers must never be painted, plated, coated, or otherwise altered after leaving the factory. Modified sprinklers must be replaced. Sprinklers that have been exposed to corrosive products of combustion, but have not operated, should be replaced if they cannot be completely cleaned by wiping the sprinkler with a cloth or by brushing it with a soft bristle brush.

Care must be exercised to avoid damage to the sprinklers before, during, and after installation. Sprinklers damaged by dropping, striking, wrench twist/slippage, or the like, must be replaced. Also, replace any sprinkler that has a cracked bulb or that has lost liquid from its bulb. See the Installation section.

The owner is responsible for the inspection, testing, and maintenance of their fire protection system and devices in compliance with this document, as well as with the applicable standards of the NATIONAL FIRE PROTECTION ASSOCIATION such as NFPA 25, in addition to the standards of any other authorities having jurisdiction. Contact the installing contractor or product manufacturer with any questions.

Automatic sprinkler systems are recommended to be inspected, tested, and maintained by a qualified Inspection Service in accordance with local requirements and/or national codes.

P/N* 65–XXX–X–XXX

	Orientation	Escutcheon
96	Pendent	Standard
93		Deep
97		Recessed
92		Without
94	Horizontal Sidewall	Standard
53		Deep
55		Recessed
54		Without

	Temperature Rating[3]
1	155°F (68°C)
2	175°F (79°C)
3	200°F (93°C)
4	286°F (141°C)
5	360°F (182°C)

	Sprinkler Finish	Escutcheon Finish[1]
0	Chrome Plated	Signal White (RAL9003) Polyester
1	Natural Brass	Signal White (RAL9003) Polyester
2	Natural Brass	Brass Plated
4	Signal White (RAL9003) Polyester	Signal White (RAL9003) Polyester
8	Chrome Plated	Stainless Steel[2]
9	Chrome Plated	Chrome Plated

	Order Length[4]
055	5.50 in.
082	8.25 in.
180	18.00 in.
187	18.75 in.
372	37.25 in.
480	48.00 in.

NOTES
1. Escutcheon finish applies to sprinklers provided with escutcheons.
2. The stainless steel escutcheon finish is available for the pendent sprinkler only.
3. 175°F (79°C) and 360°F (182°C) temperature ratings apply to pendent sprinkler assemblies only; 360°F (182°C) temperature rating applies to non-recessed sprinkler assemblies.
4. Dry-type sprinklers are furnished based upon "Order Length" as measured according to Figures 3 to 6, as applicable, and for each individual sprinkler where it is to be installed. After the measurement is taken, round it to the nearest 1/4 in. increment.

* Use Prefix "I" for ISO 7-R 1 Connection (for example, I-65-961-9-180).

TABLE D
SERIES DS-8 DRY-TYPE SPRINKLERS
8.0 K-FACTOR, 1 IN. NPT, STANDARD RESPONSE, STANDARD COVERAGE
PART NUMBER SELECTION

Limited Warranty

For warranty terms and conditions, visit www.tyco-fire.com.

Ordering Procedure

Contact your local distributor for availability. When placing an order, indicate the full product name, including description and part number (P/N).

Dry-type Sprinklers
When ordering Series DS-8 8.0K Pendent or Horizontal Sidewall, Standard Response, Standard Coverage Dry-Type Sprinklers, specify the following information:

- SIN:
  TY4255 – Pendent
  TY4355 – Horizontal Sidewall (HSW)
- Order Length:
  Pendent Dry-Type Sprinklers are furnished based on Order Length as measured according to Figures 4 to 7, as applicable. After the measurement is taken, round it to the nearest 1/4 in. increment.

  Horizontal Sidewall Dry-Type Sprinklers are furnished based upon order length as measured according to Figures 8 to 11, as applicable. After the measurement is taken, round it to the nearest 1/4 in. increment.
- Inlet Connections:
  1 in. NPT (Standard)
  ISO 7-R 1

  Note: *For information on ISO Inlet Thread Connections, contact Johnson Controls Technical Services.*
- Temperature Rating
- Sprinkler Finish
- Escutcheon Type and Finish, as applicable
- P/N from Table D
  Part numbers are for 1 in. NPT standard order sprinklers. Orders for all other sprinkler assemblies must be accompanied by a complete description.

Replacement Escutcheons
Order separately.

Note: *Style 10 Recessed Escutcheons are shipped as assemblies comprised of closure ring and mounting plate. The included mounting plate is not used for dry type sprinkler applications, discard accordingly.*

Specify: (specify type), (specify) finish, P/N (specify):

Recessed (Style 10)
Brass Plated. 91-960-2-010
Signal White (RAL9003). 91-960-4-010
Chrome Plated. 91-960-9-010
Stainless Steel 91-960-0-010

Standard (Push-On)
White Color 91-106-0-007
Brass Plated. 91-106-2-007
Chrome Plated. 91-106-9-007
Stainless Steel 91-106-8-007

Standard Horizontal Sidewall
Brass Plated. 854922
Signal White (RAL9003). 854902
Chrome Plated. 854912

Deep
Brass Plated. 91-107-2-010
White 91-107-4-007
Chrome Plated. 91-107-9-007
Stainless Steel 91-107-0-007

Sprinkler Wrench
Specify W-Type 7 Sprinkler Wrench, P/N 56-850-4-001

Sprinkler Boot
Specify Model DSB-2 Dry Sprinkler Boot, P/N 63-000-0-002

This part number includes one (1) Boot, two (2) Strap Ties, and 1/3 oz of Adhesive (a sufficient quantity for installing one boot).

1467 Elmwood Avenue, Cranston, RI 02910 | Telephone +1-401-781-8220

© 2024 Johnson Controls. All rights reserved. All specifications and other information shown were current as of document revision date and are subject to change without notice.

NATIONAL FIRE PROTECTION ASSOCIATION and NFPA are registered trademarks of National Fire Protection Association;
TEFLON is a trademark of The Chemours Company FC, LLC

Johnson Controls

General Terms and Conditions of Sale

All products or services (collectively the "Products") furnished by Tyco Fire Products LP or its affiliate that sells Products to Buyer hereunder (hereinafter referred to as "Seller") shall be in accordance with the following terms and conditions unless set forth in a customer master agreement previously executed by and between Seller and Buyer:

1. ACCEPTANCE AND COMPLETE AGREEMENT. Buyer's order is binding only when accepted in writing at the principal office of Seller. The terms and conditions of sale are only those stated below, which shall constitute the complete agreement between the parties and may not be altered or modified except in writing duly executed by each party. The parties agree there are no agreements between the parties, oral or written, with respect to the Products sold hereunder (including any made or implied from past dealings) except as expressed herein. No terms and conditions stated in or attached to Buyer's communications to Seller, including but not limited to Buyer's purchase orders, the terms of which are hereby rejected, are applicable to these terms and conditions in any way and are not to be considered Buyer's exceptions to the provisions of these terms and conditions. Trade custom, trade usage and past performance are superseded by these terms and conditions and shall not be used to interpret these terms and conditions.

2. DELIVERY. Seller will deliver or make available the Products within a reasonable time after receiving Buyer's purchase order, subject to their availability. The delivery date provided by Seller for the Products is only an estimate and is based upon prompt receipt of all necessary information from Buyer. If Buyer causes Seller to delay shipment or completion of the Products, Seller will be entitled to any and all extra costs and expenses resulting from the delay. Seller will not be liable for any delays, loss, or damage in transit, and failure to deliver within the time estimated will not be a material breach of contract on Seller's part. Seller will use commercially reasonable efforts to make shipments as scheduled.

3. EXPORTATION. If the Products ordered are to be exported from the United States (US), the quoted shipping dates are subject to receipt of all export documents and authorizations. Regardless of ultimate destination, the prices quoted are based on packing for domestic shipment unless otherwise stated in writing. Buyer agrees to provide Seller in writing with the ultimate destination and identity of the end-user at the time the order is placed if the Products are to be exported. Seller reserves the right to choose the freight forwarder, carrier and/or broker. These commodities, technology or software shall be exported from the United States in accordance with the Export Administration Regulations. Diversion contrary to U.S. law is prohibited. Buyer acknowledges and agrees that it shall be responsible for compliance with any chemical registration or importation requirements of any county into which it seeks to import the Products. Domestic Destinations – The Buyer of items shipping to US destinations is solely responsible for complying with applicable U.S. export laws. Seller shall not be the importer of record and is not responsible for compliance with importation requirements of any country to which the Products are shipped.

4. PRICES; TAXES. Seller may change its pricing structure upon written notice to Buyer. Notwithstanding anything contained herein to the contrary, prices may be adjusted by Seller, upon notice to Buyer, prior to shipment for products or services supplied hereunder or any time, for all other costs, regardless of whether a proposal, quotation or purchase order has been accepted, acknowledged or otherwise agreed, to take into account increases in the cost of raw materials (e.g., steel, aluminum, electronic components), difficulties in securing products, changes in law, increases in labor rates or Taxes (as defined below), Trade Restrictions (as defined below), government actions, or to cover any unforeseen or other extra cost elements. The term "Trade Restrictions" is defined as any additional or new tariff/duty, quota, tariff-rate quota, or cost associated with the withdrawal of tariff/duty concessions pursuant to a trade agreement(s). Notwithstanding anything contained herein to the contrary, all stated prices are exclusive of, and Buyer agrees to pay any taxes, fees, duties, tariffs, false alarm assessments, permits and levies or other charges imposed and/or enacted by a government, however designated or imposed (collectively, "Taxes"). Any Taxes related to the products and/or services purchased pursuant to this Agreement are the responsibility of Buyer (excluding taxes based on Seller's net income), unless Buyer presents an exemption certificate acceptable to Seller and the applicable taxing authorities. If possible, Seller will bill Taxes as a separate item on the invoice presented to Buyer. In the event Seller is required to pay any such taxes or other charges, Buyer shall reimburse Seller therefor on demand. If any exemption certificate presented by Buyer is held to be invalid, then Buyer will immediately pay Seller the amount of the Tax and any penalties and interest related thereto. At any time prior to shipment, Seller shall be entitled to an increase in time and money for any costs that it incurs directly or indirectly that arise out of or relate to changes in taxes, tariffs, duties or similar charges due to such changes. Revisions to the desired delivery date by the Buyer and delays not due to Seller's negligence may be subject to escalation of prices at Seller's sole discretion.

5. ORDERS FOR FEDERAL GOVERNMENT CONTRACTS/SUBCONTRACTS. For direct and indirect US Federal government contracts, the Products to be supplied by Seller are "commercial items" and/or "commercially available off-the-shelf (COTS) items" as defined in the Federal Acquisition Regulation (FAR), 48 CFR Part 52.

(a) (i) 52.203-13, Contractor Code of Business Ethics and Conduct (Apr 2010) (41 U.S.C. 3509), if the subcontract exceeds $5,000,000 and has a performance period of more than 120 days. In altering this clause to identify the appropriate parties, all disclosures of violation of the civil False Claims Act or of Federal criminal law shall be directed to the agency Office of the Inspector General, with a copy to the Contracting Officer; (ii) 52.203-15, Whistleblower Protections Under the American Recovery and Reinvestment Act of 2009 (Jun 2010) (Section 1553 of Pub. L. 111-5), if the subcontract is funded under the Recovery Act; (iii) 52.219-8, Utilization of Small Business Concerns (Oct 2014) (15 U.S.C. 637(d)(2) and (3)), if the subcontract offers further subcontracting opportunities. If the subcontract (except subcontracts to small business concerns) exceeds $650,000 ($1.5 million for construction of any public facility), the subcontractor must include 52.219-8 in lower tier subcontracts that offer subcontracting opportunities; (iv) 52.222-26, Equal Opportunity (Mar 2007) (E.O. 11246); (v) 52.222-35, Equal Opportunity for Veterans (Jul 2014) (38 U.S.C. 4212(a)); (vi) 52.222-36, Equal Opportunity for Workers with Disabilities (Jul 2014) (29 U.S.C. 793); (vii) 52.222-37, Employment Reports on Veterans (Jul 2014) (38 U.S.C. 4212); (viii) 52.222-40, Notification of Employee Rights Under the National Labor Relations Act (Dec 2010) (E.O. 13496), if flow down is required in accordance with paragraph (f) of FAR clause 52.222-40; (ix) 52.222-50, Combating Trafficking in Persons (Mar 2015) (22 U.S.C. 7104(g)); (x) 52.225-26, Contractors Performing Private Security Functions Outside the United States (Jul 2013) (Section 862, as amended, of the National Defense Authorization Act for Fiscal Year 2008; 10 U.S.C. 2302 Note); (xi) 52.232-40, Providing Accelerated Payments to Small Business Subcontractors (Dec 2013), if flow down is required in accordance with paragraph (c) of FAR clause 52.232-40; (xii) 52.247-64, Preference for Privately Owned U.S.-Flag Commercial Vessels (Feb 2006) (46 U.S.C. App. 1241 and 10 U.S.C. 2631), if flow down is required in accordance with paragraph (d) of FAR clause 52.247-64). As used in the referenced FAR clauses "Contract" means these terms and conditions; "Contracting Officer" means the U.S. Government Contracting Officer; "Contractor" and "Offeror" means Seller; "Prime Contract" means prime contract between Buyer and the Federal government; and "Subcontract" means any contract placed by Seller or lower-tier subcontracts under these terms and conditions.

© 2025 Johnson Controls. All rights reserved. All specifications and other information shown were current as of document revision date and are subject to change without notice.

(b) Seller will also comply with the following mandatory terms of the Department of Defense FAR Supplement (DFARS) *provided* the Federal prime contract is identified by Contract Number in the Government Order *and* the Federal prime contract (i) is for Products that are not commercial items *and* (ii) contains any of the following four DFARS clauses: 252.225-7009, Restriction on Acquisition of Certain Articles Containing Specialty Metals; 252.246-7003, Notification of Potential Safety Issues; 252.247-7023 Transportation of Supplies by Sea; or 252.247-7024, Notification of Transportation of Supplies by Sea: (i) 252.225-7009 Restriction on Acquisition of Certain Articles Containing Specialty Metals (10 U.S.C. 2533b); (ii) 252.246-7003 Notification of Potential Safety Issues (Jan 2007); (iii) 252.247-7023 Transportation of Supplies by Sea (10 U.S.C. 2631); and (vi) 252.247-7024 Notification of Transportation of Supplies by Sea (10 U.S.C. 2631).

(c) Any commercial computer software or commercial computer software documentation to be delivered by Seller will be acquired under Seller's standard commercial licenses customarily provided to the general public.

6. PAYMENT. Standard payment terms are net thirty (30) days from date of invoice, unless otherwise agreed in writing by the parties prior to each order. Invoices shall be paid by Buyer via electronic delivery via EFT/ACH in accordance with written instructions separately provided by Seller (as may be updated by Seller in writing from time to time), unless an alternative payment method is agreed to by Seller in writing. Buyer shall confirm Seller's payment instructions with their Seller account representative prior to making payment, and Buyer shall bear the risk of loss for payments made using unauthorized instructions. In the event credit has not been established Seller reserves the right to require payment, or the issuance of an irrevocable letter of credit, in advance of shipment. In the event payment is not received when due, without prejudice to any other right or remedy, Seller reserves the right to: (i) immediately stop performing any services, withhold deliveries of Products and other materials, terminate or suspend any software licenses provided hereunder, and/or terminate this Agreement; and (ii) in addition, Buyer shall automatically incur, and agrees to pay, the following additional costs and charges on any amounts that are not paid when due: (a) interest at a rate equal to the lesser of one and one half percent (1.5%) per month or the highest rate permitted by law (except for accounts in the European Union, where late payment interest rate shall be the base interest rate of the European Bank plus 10 percentage points);, from the date of shipment until paid; (b) all of Seller's costs of collection, including (1) actual out of pocket expenses and (2) a collection fee of twenty-five percent (25%) of the past due amount if collected through a collection agency or attorney and thirty-five percent (35%) if litigation is commenced to collect such past due amount; and (c) for accounts in the European Union, a fixed indemnity per invoice of €40.00. Invoicing disputes must be identified in writing within 15 days of the date of invoice. Invoicing disputes not resolved within 30 days will be deemed invalid. Payments of any disputed amounts are due and payable immediately upon resolution. Shipments to Buyer with outstanding invoices unpaid after thirty (30) days will be suspended until all overdue invoices are paid or be made on a cash-in-advance basis only, in Seller's sole discretion. Seller reserves a purchase money security interest in each Product shipped, which will be satisfied by payment in full. Seller has the right to file a copy of this document as a financing statement. Buyer's entitlement to receive any rebate or other incentive that Seller may offer from time to time shall be conditioned on Buyer timely paying all invoices and other amounts owed by Buyer to Seller during the period to which the rebate or other incentive relates Any rebate or other incentives will be determined at the time of the order, if applicable. Quoted orders not including the quote number will be billed at the Buyer's standard price. In the event that Buyer does not use any portion of a credit (including any rebate credit) within ninety (90) days of its issue date, then Seller shall be entitled to apply such credit against any invoice(s) or other amounts owing by Buyer to Seller. All credits (including rebate credits) shall expire if not used within one hundred eighty (180) days of its issue date. In the event that Buyer provides a payment without designating the invoice(s) to which such payment is to be applied, Seller may apply such payment to such invoice(s) or other amounts owing by Buyer to Seller as Seller may determine in its sole discretion.

7. SOLVENCY. Buyer's order will be deemed a representation that Buyer is solvent and able to pay for the Products ordered. If Buyer fails to make payments when due or if bankruptcy or insolvency proceedings are instituted by or against Buyer, or if Buyer makes an assignment for the benefit of creditors, Buyer will be deemed to be in default and Seller will have the right to terminate its obligations by written notice to Buyer, but such termination will not affect Buyer's obligation to pay for Products delivered and works in progress.

8. CANCELLATION. No Products may be returned without prior written approval of Seller. Orders placed with and accepted by Seller may not be canceled except upon Seller's written consent prior to shipment and Buyer's acceptance of Seller's cancellation charges which shall protect Seller against all costs and losses. Seller reserves the right to cancel any sale hereunder in Seller's sole discretion without liability to Buyer (except for refund of monies already paid).

9. RETURN GOODS POLICY. The request to return material must include the description of material, reason for return, customer order number and/or customer invoice number to enable the request to be processed. No materials may be returned without this information. If and when the request is approved, a Return Authorization form will be completed and include a predetermined number for reference and will advise where the material should be returned. The Return Authorization form will contain a Packing List that must accompany materials when they are returned. Return Authorizations are valid for thirty (30) days only from date of issue. No credit will be issued for returned materials without an approved Return Authorization. Materials being returned due to order entry and/or shipping errors on the part of Seller will be credited at full value providing the materials are returned within thirty (30) days from the date of the original shipment. Credit of the actual price paid will be issued for defective materials only after the material has been inspected and verified by Seller to contain a defect. A 25% restocking charge and/or a $25.00 minimum charge, whichever is greater, will be assessed for inspecting, handling and restocking the material and the total credit will depend upon the resale value of the material. Returned freight will be at the Buyer's expense. Items purchased for resale by Seller may be returned under the Manufacturer's terms and conditions only. If the Manufacturer will not accept the materials, credit will not be issued by Seller to the Buyer. Special material orders and made-to-order Products are non-returnable. Credit will not be issued for discontinued items. Items no longer manufactured or items superseded by another model are defined as discontinued. In order to receive consideration for credit, material must be returned less than ninety (90) days from date of original invoice and of reasonable quantities. To receive consideration for credit, material must be in resalable condition. Material that has been approved for return must be packaged in such a way as to prevent damage during shipment. The use of original packaging is preferred. Credit cannot be issued for materials damaged in transit due to improper packaging.

10. MINIMUM ORDER. The Minimum Order Policy is $100.00 per order.

11. MANUFACTURE. Seller reserves the right to discontinue the manufacture of, or change or modify the design and/or construction of the Products sold pursuant to these terms and conditions, without incurring any obligation to Buyer.

12. JURISDICTION AND DISPUTES. These terms and conditions shall be governed in accordance with the law of the State of New York without regard to principles of conflicts of law. THE UNITED NATIONS CONVENTION ON CONTRACTS FOR THE INTERNATIONAL SALE OF GOODS DOES NOT APPLY TO THESE TERMS OR THE DOCUMENTS RELATED HERETO AND IS HEREBY EXPRESSLY DISCLAIMED BY SELLER AND BUYER. . All disputes under these terms and conditions shall be resolved by the state or federal

© 2025 Johnson Controls. All rights reserved. All specifications and other information shown were current as of document revision date and are subject to change without notice.

courts of the State of New York and the parties all consent to the jurisdiction of such courts, agree to accept service process by mail, and hereby waive any jurisdiction or venue defenses otherwise available.

13. INSPECTION. All Products must be inspected within five (5) calendar days of receipt. If any damage is discovered, a claim must be filed with the carrier. A full report of the damage must be forwarded to Seller so that it can arrange for repair or replacement.

14. TITLE/SHIPPING. Unless otherwise agreed in the sales confirmation, all Products furnished hereunder will be shipped "Ex-Works (EX-W)" INCOTERMS 2020 Seller's plant or factory (the "Delivery Location"), using Seller's standard methods for packaging and shipping same. The shipping term is subject to change upon notice to Buyer at any time prior to shipment. Buyer will take delivery of the Products within three (3) days of Seller's notice that the Products have been delivered to the Delivery Location. If Buyer fails to take delivery of the Products within this three (3) day period, Buyer will pay Seller for the Products and all storage expenses incurred by Seller or, in Seller's discretion, Seller may ship the Products to Buyer at Buyer's expense. Seller may, in its sole discretion, without liability or penalty, make partial shipments of Products to Buyer. Each shipment will constitute a separate sale, and Buyer will pay for the units shipped whether the shipment is in whole or partial fulfillment of Buyer's purchase order. Title in, risk of loss, and the right of possession to such goods shall pass to the Buyer upon the Seller's delivery to carrier at Seller's shipping facility, and Seller is not responsible for damage or loss in transit, regardless of whether or not Buyer may have the right to reject or revoke acceptance of said Products. Seller can arrange for in-transit insurance at Buyer's expense, but will not do so without Buyer's written instructions. Unless otherwise stated in contract documents, all goods will be shipped freight prepaid and billed. Seller reserves the right to manage freight arrangements and pass-through the costs to Buyer, without significant mark-ups. Charges for shipping may not reflect net transportation cost paid by the Seller. Buyer shall be responsible for all import requirements of any country into which it seeks to import the Products, at its own expense, and will provide the licenses and consents to the Seller before shipment.

15. LIMITED WARRANTY. Unless otherwise stated in a customer master agreement, Products manufactured by Seller are warranted solely to the original Buyer for eighteen months (18) months from date of shipment or one (1) year from date of installation, whichever is sooner, against defects in material and workmanship when paid for and properly installed and maintained under normal use and service. Exceptions to the limited warranties contained in this Section 15 are set forth in Appendix A attached hereto. Warranty will be immediately voided by substitution of non-Seller approved parts. No warranty is provided for products or components that have been subject to normal wear and tear, misuse, improper installation, incompatible chemicals/materials, corrosion; that have not been used for their intended purpose; or that have not been installed, maintained, modified or repaired in accordance with applicable Standards of the National Fire Protection Association and/or the standards of any other Authorities Having Jurisdiction. For Products identified in a Seller price book as manufactured by third parties ("Resale Products"), Seller will pass through to Buyer any transferable warranties provided to Seller by the manufacturer of such Resale Products. Materials found by Seller to be defective shall be either repaired or replaced, at Seller's sole option. Seller neither assumes, nor authorizes any person to assume for it, any other obligation in connection with the sale of Products or parts of Products. Seller shall not be responsible for system design errors or inaccurate or incomplete information supplied by Buyer or Buyer's representatives, or for the establishment, operation, maintenance, access, security and other aspects of Buyer's or its customer's computer network, as well as network performance and compatibility issues. Buyer is solely responsible for the establishment, operation, maintenance, access, security and other aspects of its computer network, as well as network performance and compatibility issues. EXCEPT FOR THE REPRESENTATIONS AND WARRANTIES CONTAINED IN THIS AGREEMENT OR THE APPLICABLE EULA, SELLER MAKES NO REPRESENTATION OR WARRANTY, EXPRESS OR IMPLIED (INCLUDING IMPLIED WARRANTIES OF MERCHANTABILITY, FITNESS FOR A PARTICULAR PURPOSE AND NON-INFRINGEMENT) CONCERNING ANY PRODUCT, AND ALL OTHER GUARANTEES, WARRANTIES, CONDITIONS AND REPRESENTATIONS, EITHER EXPRESS OR IMPLIED, ARE EXCLUDED. SELLER MAKES NO WARRANTY THAT ANY PORTION OF THE SOFTWARE (INCLUDING WITHOUT LIMITATION FIRMWARE) WILL OPERATE UNITERRUPTED, BE FREE OF ALL ERRORS AND MALICOUS CODE, BE SECURE FROM MALICIOUS ACTIVITY, OR THAT DEFECTS IN ANY SUCH SOFTWARE WILL BE CORRECTED. SELLER SHALL NOT BE RESPONSIBLE FOR PROBLEMS CAUSED BY CHANGES IN THE OPERATING CHARACTERISTICS OF THE DEVICE(S) UPON WHICH ANY SOFTWARE (INCLUDING WITHOUT LIMITATION FIRMWARE) IS OPERATING, OR FOR PROBLEMS IN THE INTERACTION OF ANY SUCH SOFTWARE WITH NON-SELLER SOFTWARE OR HARDWARE PRODUCTS. This limited warranty sets forth the exclusive remedy for claims based on failure of or defect in Products, materials or components, whether the claim is made in contract, tort, strict liability or any other legal theory. This warranty will apply to the full extent permitted by law. The invalidity, in whole or part, of any portion of this warranty will not affect the remainder.

16. LIMITATION OF LIABILITY. IN NO EVENT WILL SELLER BE LIABLE FOR ANY INDIRECT, SPECIAL, INCIDENTAL, EXEMPLARY, OR CONSEQUENTIAL DAMAGES, INCLUDING BUT NOT LIMITED TO ANY LOSS OF USE OR UNDER-UTILIZATION OF LABOR OR FACILITIES, LOSS OF REVENUE OR ANTICIPATED PROFITS, LOST DATA AND OTHER LOSSES ARISING FROM VIRUSES, RANSOMWARE, CYBER ATTACKS OR FAILURES OR INTERRUPTIONS TO NETWORK SYSTEMS, AND COSTS OF PROCUREMENT OF SUBSTITUTE PRODUCTS, REGARDLESS OF THE FORM OF ACTION, WHETHER IN CONTRACT, TORT, OR OTHERWISE, EVEN IF SELLER HAS BEEN ADVISED OF THE POSSIBILITY OF SUCH DAMAGES. SELLER'S LIABILITY UNDER THIS AGREEMENT INCLUDING ANY INDEMNIFICATION OBLIGATIONS WILL NOT INDIVIDUALLY OR IN THE AGGREGATE EXCEED THE AMOUNTS PAID TO SELLER BY BUYER FOR THE PRODUCT GIVING RISE TO SUCH LIABILITY OR $2 MILLION U.S. DOLLARS, WHICHEVER IS LESS.

17. NUCLEAR APPLICATIONS. Unless otherwise agreed in writing by a duly authorized representative of Seller, Products sold hereunder are not intended for use in connection with any nuclear facility or activity. If so used, the provisions of this Rider for Nuclear Applications will apply. If any Products sold hereunder are used in connection with any nuclear facility or activity, Seller and its suppliers shall have no liability to Buyer or its insurers for any nuclear damage or contamination, and Buyer shall indemnify Seller against any such liability, whether as a result of breach of contract, indemnity, warranty, tort (including Seller's negligence), strict liability or otherwise. The indemnity shall not apply to any damages or bodily injury, or both, arising out of a "nuclear incident", as that term is defined in the Atomic Energy Act of 1954, as amended (the "Act"). In addition, Buyer shall furnish financial protection as required by Section 170 of the Act, including an agreement of indemnification and/or nuclear liability insurance from ANI and MAELU, or both, pursuant to Section 170 of the Act, as applicable. Buyer shall not remove any items of equipment from the plant site or otherwise transfer any interest therein without first providing Seller with written assurance of limitation of and protection against liability (both nuclear and non-nuclear) following the proposed removal or transfer at least equivalent to that afforded to Seller and its suppliers under Sections 15 and 23 of these General Terms and Conditions of Sale. Removal or transfer contrary to this provision shall, in addition to any other legal or equitable rights of Seller, make Buyer the indemnitor of Seller and its suppliers to the same extent that they would have been protected had no such removal or transfer taken place. Any Seller's material or equipment which becomes radioactive at the work site, shall, at Seller's option, be purchased by Buyer. Any nuclear decontamination necessary for Seller's performance (including warranty) shall be performed by Buyer without cost to Seller.

© 2025 Johnson Controls. All rights reserved. All specifications and other information shown were current as of document revision date and are subject to change without notice.

18. COMPLIANCE WITH LAWS, CODES, AND STANDARDS.

(a) Seller represents that the Products will be produced in compliance with applicable fair labor standards laws, occupational safety and health laws, and laws related to nonsegregation and equal employment opportunity. Warranties for design services and the accuracy of any materials list provided by Seller shall be limited only to those codes, standards or specification requirements specifically stated in Seller's quotation documents or transmittal sheets or accepted change order or revisions and only as in effect at the time of quotation or Seller accepted change revisions. The Contract price, delivery and performance dates and any performance guarantees will be equitably adjusted to reflect additional costs or obligations incurred by Seller resulting from a change in industry specifications, codes, standards, applicable laws or regulations.

(b) Each party shall comply with all applicable laws, regulations, and ordinances. Without limiting the foregoing, in no event shall Buyer take any action(s) contrary to the export and import laws and regulations in effect as of the date of shipment of the Products of any country involved in the transactions contemplated by the Agreement. Buyer shall comply with applicable international export and/or embargo regulations, in particular the applicable German, EU and US regulations. Seller reserves the right to terminate or withdraw from the Agreement and/or the fulfillment of any purchase order hereunder if it becomes apparent that Buyer or its end user of Seller's Products or services is a person or entity listed under applicable German, US, European, and/or international export or embargo regulations or that the delivery is intended for a country to which delivery is prohibited under these regulations. Buyer undertakes to inform Seller in due time if any Products and/or services are to be passed on to an end user or transferred to such country and if this could violate the afore mentioned regulations. Buyer shall not sell, export or re-export, directly or indirectly, to the Russian Federation or for use in the Russian Federation, any goods supplied under or in connection with the Agreement or any purchase order hereunder that fall under the scope of Article 12g of Council Regulation (EU) No 833/2014. The same obligations apply in relation to Belarus conform Article 8g of Council Regulation (EU) 765/2006. Buyer shall undertake its best efforts to ensure that the purpose of this clause is not frustrated by any third parties further down the commercial chain, including by possible resellers. Any violation of this clause shall constitute a material breach of an essential element of this Agreement, and Seller shall be entitled to all appropriate remedies, including, but not limited to, termination of the Agreement and/or any purchase order hereunder. Buyer shall immediately inform Seller about any problems in applying the requirements of this clause. including any relevant activities by third parties that could frustrate the purpose of this clause.

19. FAIR DEALING. Seller is committed to prohibiting bribery anywhere in the world, in connection with any kind of business, directly by Seller personnel or through intermediaries or third parties, to government or private individuals. Seller maintains an active program to monitor the activities of third parties with whom it conducts business and will not interact with third parties who engage in improper activities or make improper payments.

20. DRAWINGS. Any drawings submitted herewith are only to show the general style, arrangement, and approximate dimensions of the Products offered. No work is to be based on drawings unless the drawings are certified. In no event will manufacturing or proprietary drawings be supplied.

21. CONFIDENTIALITY. Buyer agrees that all drawings, prints and other technical material which Seller provides to Buyer, whether prepared by Seller or by third parties under contract to Seller, contain data which embody trade secrets and confidential know-how of commercial value to Seller or third parties under contract to Seller. Buyer agrees (a) to keep such information confidential; (b) that it will not disclose such information to any other person, corporate division or entity; (c) will not use such information except in connection with the Products supplied hereunder; and

(d) will not sell, lease, loan or permit any other person, corporate division or entity to use such information for any purpose, without Seller's prior written consent. Nothing herein shall restrict the use of information generally available to the public.

22. INTELLECTUAL PROPERTY. Buyer acknowledges Seller and its affiliates are the owners of brands, trademarks, designs, patents, copyrights and other intellectual property relating to Seller's Products, and that no right or license is conveyed by Seller to Buyer to manufacture, have manufactured, modify, import or copy such Products. Buyer agrees that it will reference brands of Seller or its affiliates only in connection with the use or sale of Products delivered to Buyer hereunder, and not in connection with the sale of any other Product, except as separately authorized by Seller in writing.

23. PATENT INDEMNITY. Seller will defend, at its own expense, any action against Buyer brought by a third party to the extent that the action is based upon a claim that a Product provided under the Agreement infringes any U.S. (Canadian) patents or copyrights, or misappropriates any trade secrets, of a third party. Seller will pay those costs and damages finally awarded against Buyer in the action that are specifically attributable to the claim or those costs and damages agreed to in a monetary settlement of the action. Notwithstanding the foregoing, Seller will have no obligation to defend or pay any costs or damages related to any infringement claim based upon any: (i) misuse or modification of the Product by Buyer or its employees, agents or downstream customers, (ii) use of the Product in combination with other materials, goods, products, or services for which the Product was not intended to be used (as demonstrated, for example, by Seller's applicable product literature), (iii) failure of Buyer to implement any update provided by Seller that would have prevented the claim, (iv) Product that Seller made to Buyer's specifications or designs, (v) Product that is not supplied by Seller, or (vi) patents declared to be essential by the patent owner under a technical standard or otherwise available for licensing under fair, reasonable, and non-discriminatory terms. The foregoing obligations are conditioned on Buyer (i) notifying Seller promptly in writing of the action, (ii) making no admission of liability and giving Seller sole control of the defense thereof and any related settlement negotiations, and (iii) cooperating and, at Seller's request and expense, assisting in the defense. If the Product becomes, or in Seller's opinion is likely to become, the subject of an infringement claim, Seller may, at its option and expense, either (i) procure for Buyer the right to continue using the Product, (ii) replace or modify the Product so that it becomes non-infringing, or (iii) accept return of the Product and refund Buyer the amounts actually paid by the Buyer to Seller for the Product, less depreciation over a three (3) year period. THIS IS SELLER'S ENTIRE LIABILITY AND BUYER'S EXCLUSIVE REMEDY FOR INFRINGEMENT CLAIMS AND ACTIONS.

24. INDEMNITY. Buyer agrees to defend, indemnify and hold the Seller (and its agents, representatives, employees, officers, related companies, successors and assigns, and customers) harmless from all claims, demands, actions, damages, and liabilities (including attorney's fees and consequential and incidental damages) arising out of any injury (including death) to any person or damage to any property in any way connected with any act or omission of Buyer, its agents, employees, or subcontractors.

25. EXCUSABLE DELAY/FORCE MAJEURE. Seller shall not be liable, nor in breach or default of its obligations under this Agreement, for any delays, interruption, or failure to perform under this Agreement, where such delay, interruption or failure is caused, in whole or in part, directly or indirectly, by a Force Majeure Event. If Seller's performance is delayed, impacted,

© 2025 Johnson Controls. All rights reserved. All specifications and other information shown were current as of document revision date and are subject to change without notice.

or prevented by a Force Majeure Event or its continued effects, Seller will be excused from performance or, at Seller's option, entitled to complete performance and extend any relevant completion date or scheduled milestone by the amount of time that Seller was delayed as a result of the Force Majeure Event, plus such additional time as may be reasonably necessary to overcome the effect of the delay. To the extent that the Force Majeure Event directly or indirectly increases Seller's cost to perform, Buyer shall reimburse Seller for such increased costs, including, without limitation, costs incurred by Seller for additional labor, inventory storage, expedited shipping fees, trailer and equipment rental fees, subcontractor fees, compliance with government requirements, or other costs and expenses incurred by Seller in connection with the Force Majeure Event. As used herein, a "*Force Majeure Event*" is a condition or event that is beyond the reasonable control of Seller, whether foreseeable or unforeseeable, including but not limited to the following: acts of God or natural disasters, acts or omissions of any governmental authority (including, without limitation, change of any applicable law or regulation), disease or public health risks and/or responses thereto, strikes, labor disputes, an increase of 5% or more as a result of Trade Restrictions or other excise taxes for materials to be used on the project, fires, explosions or other casualties, thefts, vandalism, civil disturbances, riots, war or other armed conflict (or the serious threat of same), acts of terrorism, electrical power outages, interruptions or degradations in telecommunications, computer, network, or electronic communications systems, cyber-attacks, or unavailability or shortage of parts, materials, supplies, or transportation

26. WAIVER. No failure to exercise and no delay in exercising on the part of Seller any right, power or privilege hereunder will operate as a waiver thereof nor will any single or partial exercise of any right, power or privilege hereunder preclude further exercise of the same right, power or privilege.

27. VALIDITY OF PROVISIONS. In the event any provision or any part or portion of any provision of these terms and conditions shall be held to be invalid, void or otherwise unenforceable, such holding shall not affect the remaining part or portions of that provision, or any other provision hereof.

28. ELECTRONIC MEDIA. Buyer agrees that Seller may scan, image or otherwise convert these terms and conditions into an electronic format of any nature. Buyer agrees that a copy of these terms and conditions produced from such electronic format is legally equivalent to the original for any and all purposes, including litigation.

29. MISCELLANEOUS. Seller expressly disclaims any requirement, understanding or agreement, whether express or implied, contained in any Buyer purchase order, shipping release form, policy, code of conduct or elsewhere, that any of Seller's personnel be vaccinated against Covid-19 under any federal, state or local law, regulation or order applicable to government contracts or subcontracts, including, without limitation, Presidential Executive Order 14042 ("Ensuring Adequate COVID Safety Protocols for Federal Contractors") and Federal Acquisition Regulation (FAR) 52.223-99 ("Ensuring Adequate COVID Safety Protocols for Federal Contractors"), unless and solely to the extent that such requirement is expressly set forth in a written agreement manually signed by an authorized officer of Seller.

© 2025 Johnson Controls. All rights reserved. All specifications and other information shown were current as of document revision date and are subject to change without notice.

General Terms and Conditions of Sale

Appendix A

Business	Product	Warranty Length From Shipment
Detection	SIMPLEX (outside United States and Canada), AUTOCALL, ZETTLER and FIRECLASS Fire Detection and Alarm Products	3 Years
EAS-1 Electronically Activated Sprinkler System	EAS-1 Components (including sprinklers)	3 Years
Firefighter Air Replenishment Systems (FARS)	Firefighter Air Replenishment Systems (FARS) – Component Parts	Earlier of 2 Years from shipment or 1 Year from final commissioning
Foam Agents & Hardware	TYCO Foam Hardware - Purchased Product	1 Year
Gaseous Suppression Systems	CV98 Valve	5 Years
Gaseous Suppression Systems	Engineered Fire Suppression Systems – Component Parts	1 Year
Gaseous Suppression Systems	Engineered Fire Suppression Systems - IGS-300 System	3 Years
Gaseous Suppression Systems	Engineered Fire Suppression Systems - CV98 Valve	5 Years
Gas Station System	ATTENDANT Gas Station Systems	3 Years
Industrial Systems	I-101 - Purchased Parts	1 Year
Industrial Systems	MONARCH Industrial/Paint Booth Fire Protection System	3 Years
Mechanical Products	GRINNELL Grooved	10 Years
Portable Extinguishers	ANSUL Extinguishers including SENTRY Dry Chemical, CO2, Water, K-GUARD and CLEANGUARD	6 Years
Portable Extinguishers	ANSUL Wheeled Extinguishers	6 Years
Portable Extinguishers	PYRO-CHEM Extinguishers including Dry Chemical, CO2, Water, KITCHEN ONE and CLEAN AGENT	6 Years
Portable Extinguishers	RED LINE Cartridge Operated Hand Portables	12 Years
Restaurant Systems	KITCHEN KNIGHT II	3 Years
Restaurant Systems	R-102/PIRAHNA	5 Years
Restaurant Systems	R-102/PIRANHA - Purchased Parts	1 Year
Spill Control Products	SPILL-X - Purchased Products	1 Year
Spill Control Products	SPILL-X Spill Gun Applicator	5 Years
Sprinkler System Components	TYCO FH-1A & FASTFLEX Flexible Hose	1 Year
Sprinkler System Components	G-FIRE	10 Years
Sprinkler System Components	Sprinklers	10 Years
Tyco Corrosion Solutions	NG-1 Nitrogen Generator and Accessories	1 Year
Valves & Accessories	TYCO Branded Valves	10 Years
Vehicle Systems	A-101/LVS and CHECKFIRE - Purchased Products	1 Year

© 2025 Johnson Controls. All rights reserved. All specifications and other information shown were current as of document revision date and are subject to change without notice.

Victaulic® VicFlex™ Sprinkler Fittings
Series AH2 and AH2-CC Braided Flexible Hoses

Series AH2

Series AH2-CC

1.0 PRODUCT DESCRIPTION

Available Sizes by Component

- **Series AH2 1"/DN25 Nominal ID Braided Hose:** 31"/790 mm, 36"/915 mm, 48"/1220 mm, 60"/1525 mm, 72"/1830 mm Note: length includes adapter nipple and 5.75"/146 mm straight reducer.
- **Series AH2-CC 1"/DN25 Nominal ID Braided Hose:** 31"/790 mm, 36"/915 mm, 48"/1220 mm, 60"/1525 mm, 72"/1830 mm Note: length includes captured coupling and 5.75"/146 mm straight reducer.

Connections

- **From Branchline**
  - ¾"/20 mm BSPT Female Thread (VdS only)
  - 1"/25 mm NPT or BSPT Female Thread
  - 1"/25 mm Grooved IGS (refer to Publication 10.54 for additional IGS connections)
    - No. 116 CPVC Adapter (1"/25 mm Female CPVC Socket x 1"/25 mm Grooved IGS)
    - No. 142 Welded Outlet
    - Style 922 Outlet-T
    - Style 920N Mechanical-T Outlet
    - No. 65 Grooved End of Run Fitting
  - 1 ¼"/32 mm BSPT Female Thread (LPCB only)
- **Hose Inlet**
  - ¾"/20 mm BSPT Male Thread (VdS only)
  - 1"/25 mm Grooved IGS
  - 1"/25 mm NPT or BSPT Male Thread
  - 1 ¼"/32 mm BSPT Male Thread (LPCB only)
- **Sprinkler Reducer**
  - Sprinkler Connection: ½"/15 mm, ¾"/20 mm NPT or BSPT Female Thread
  - Straight Lengths: 5.75"/146 mm, 9"/230 mm, 13"/330 mm
  - 90˚ Elbows: Short elbows typically used with concealed sprinklers; Long elbows typically used with recessed pendent sprinklers.
    - Standard Short
    - Low-Profile Short
    - Standard Long
    - Low-Profile Long

ALWAYS REFER TO ANY NOTIFICATIONS AT THE END OF THIS DOCUMENT REGARDING PRODUCT INSTALLATION, MAINTENANCE OR SUPPORT.

 © 2025 Victaulic Company. All rights reserved.

1.0 PRODUCT DESCRIPTION (CONTINUED)

Brackets

- Style AB2 for suspended and hard-lid ceilings and sidewalls: allows for vertical sprinkler adjustment and installation before most ceiling tiles are in place
- Style AB3 for surface mount applications: wood, metal and block walls, or ceilings.
- Style AB4 for hard-lid ceilings with hat furring channel grid systems: allows for vertical sprinkler adjustment
- Style AB5 for hard-lid ceilings and sidewalls: allows for vertical sprinkler adjustment
- Style AB7 / Adjustable AB7 for suspended and hard-lid ceilings
- Style AB10 for Armstrong® TechZone™ ceilings
- Style AB11 for lay-in panel suspended t-grid ceilings or drywall suspended t-grid ceilings: allows for low-profile installation (use only with 90° low-profile elbows)
- Style AB12 for suspended and hard-lid ceilings: allows for vertical sprinkler adjustment, and allows for low-profile installation down to 4"/100 mm.
- Style ABBA bracket for suspended, exposed, and hard-lid ceilings
- Style ABMM bracket for surface mount and stand off-mount applications: wood, metal and block walls, or ceilings and hard-lid ceilings
- Strut channel and pipe clamp, not supplied by Victaulic

Maximum Working Temperature

- 225°F/107°C
- 150°F/65°C (No. 116 CPVC Adapter)

Maximum Working Pressure

- 200 psi/1375 kPa (FM)
- 175 psi/1206 kPa (cULus)
- 232 psi/1600 kPa (VdS/LPCB)
- 203 psi/1.4 MPa (CCC)
- 175 psi/1206 kPa (No. 116 CPVC Adapter)

Minimum Bend Radius

- 7"/178 mm (FM/CCC)
- 2"/51 mm (cULus)
- 3"/76.2 mm (VdS/LPCB)

Maximum Allowable Sprinkler K-Factors

- FM (½"/15 mm reducer) K5.6/8,1 (S.I.), (¾"/20 mm reducer) K14.0/20,2 (S.I.)
- cULus (½"/15 mm reducer) K8.0/11,5 (S.I.), (¾"/20 mm reducer) K14.0/20,2 (S.I.)
- VdS/LPCB (½"/15 mm reducer) K5.6/8,1 (S.I.), (¾"/20 mm reducer) K8.0/11,5 (S.I.)

 © 2025 Victaulic Company. All rights reserved.

2.0 CERTIFICATIONS/LISTINGS

LPS 1261: Issue 1.2
Cert/LPCB Ref: 104/01
104/04

NOTE

- The VicFlex™ Series AH2 Hose has been tested and evaluated by Spears® for acceptable use with Spears® CPVC Products and is therefore covered under the Spears® FlameGuard® Installer Protection Plan.

3.0 SPECIFICATIONS – MATERIAL

Series AH2:

Flexible Hose: 300-series Stainless Steel
Collar/Weld Fitting: 300-series Stainless Steel
Gasket Seal: Victaulic EPDM
Isolation Ring: Nylon
Nut and Nipple: Carbon Steel, Zinc-Plated
Reducer: Carbon Steel, Zinc-Plated
Low-Profile Elbows: Ductile Iron, Zinc-Plated or Carbon Steel, Zinc-Plated
Brackets: Carbon Steel, Zinc-Plated

Series AH2-CC:

Flexible Hose: 300-series Stainless Steel
Collar/Weld Fitting: 300-series Stainless Steel
Gasket Seal: Victaulic EPDM
Isolation Ring: Nylon
Coupling Retainer Ring: Polyethylene
Nut: Carbon Steel, Zinc-Plated
Reducer: Carbon Steel, Zinc-Plated
Low-Profile Elbows: Ductile Iron, Zinc-Plated or Carbon Steel, Zinc-Plated
Housing: Ductile Iron conforming to ASTM A 536, Grade 65-45-12. Ductile Iron conforming to ASTM A 395, Grade 65-45-15, is available upon special request.

Coupling Housing Coating:

- Orange Enamel (North America, Asia Pacific)
- Red Enamel (Europe)
- Hot Dipped Galvanized

Gasket[1]:

Grade "E" EPDM (Type A)
FireLock EZ™ products have been Listed by Underwriters Laboratories Inc., Underwriters Laboratories of Canada Limited, and Approved by Factory Mutual Research for wet and dry (oil free air) sprinkler services within the rated working pressure.

[1] Services listed are General Service Guidelines only. It should be noted that there are services for which these gaskets are not compatible. Reference should always be made to the latest Victaulic Seal Selection Guide for specific gasket service guidelines and for a listing of services which are not compatible.

Bolts/Nut: Zinc electroplated carbon steel, trackhead meeting the physical and chemical requirements of ASTM A 449 and physical requirements of ASTM A 183.

Linkage: CrMo Alloy Steel zinc electroplated per ASTM B633 Zn/Fe 5, Type III Finish

No. 116 Adapter Fitting: CPVC and Brass
Seal: Victaulic EPDM

 © 2025 Victaulic Company. All rights reserved.

4.0 DIMENSIONS

Product Details - Series AH2 Braided Hose

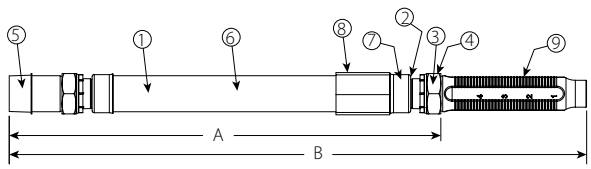

Item	Description
1	Flexible Hose
2	Isolation Ring
3	Gasket
4	Nut
5	Adapter Nipple
6	Braid
7	Collar/Weld Fitting
8	Sleeve
9	Reducer

Hose	Dimensions	
	A	B
Series	inches mm	inches mm
AH2-31	25.6 650	31.0 790
AH2-36	31.6 803	36.0 915
AH2-48	42.6 1082	48.0 1220
AH2-60	54.6 1387	60.0 1525
AH2-72	66.6 1692	72.0 1830

Series AH2-CC Braided Hose

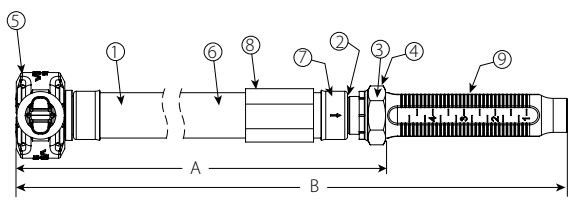

Item	Description
1	Flexible Hose
2	Isolation Ring
3	Gasket
4	Nut
5	Captured Coupling
6	Braid
7	Collar/Weld Fitting
8	Sleeve
9	Reducer

Hose	Dimensions	
	A	B
Series	inches mm	inches mm
AH2-CC-31	24.5 622	29.8 760
AH2-CC-36	29.5 749	34.8 885
AH2-CC-48	41.5 1054	46.8 1190
AH2-CC-60	53.5 1359	58.8 1495
AH2-CC-72	65.5 1664	70.8 1800

 © 2025 Victaulic Company. All rights reserved.

4.1 DIMENSIONS

Standard Reducer

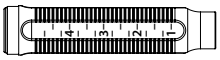

5.75"/146 mm straight reducer

Optional Reducers

9.0"/230 mm straight reducer

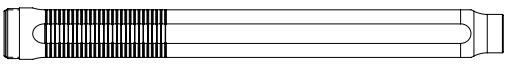

13.0"/330 mm straight reducer

Standard Elbow Reducers

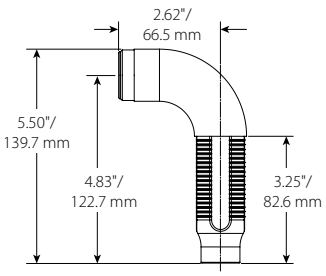

Short 90°
Elbow Reducer

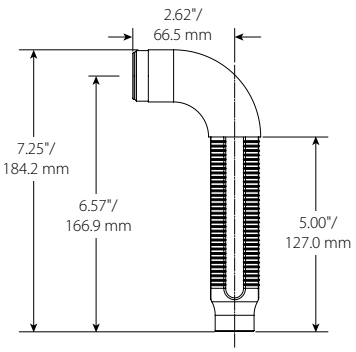

Long 90°
Elbow Reducer

NOTES

- The Short 90° Elbow Reducer is typically used with concealed sprinklers while the Long 90° Elbow Reducer is typically used in the installation of recessed pendent sprinklers.
- FM/VdS/LPCB Approved only

Low-Profile Elbow Reducers

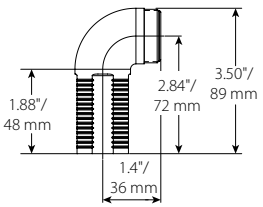

Short 90° Low-Profile
Elbow Reducer

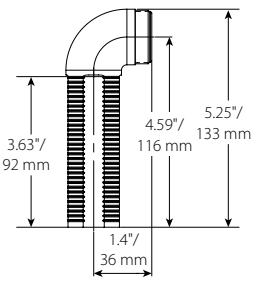

Long 90° Low-Profile
Elbow Reducer

NOTE

- Style AB11: When Low-Profile Elbows are used with the Style AB11 bracket, the Low-Profile Short Elbow is typically used with concealed sprinklers while the Low-Profile Long Elbow is typically used in the installation of recessed pendent sprinklers.

No. 116 CPVC Adapter

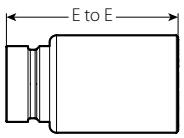

NOTES

- E to E is 3.0"/76.0 mm
- The No. 116 CPVC Adapter has 2 ft. (0.6 m) EQL of 1" Schedule 40 pipe.

 © 2025 Victaulic Company. All rights reserved.

4.2 DIMENSIONS

VicFlex™ Brackets

Style AB2

- Suspended Ceilings
- Hard-Lid Ceilings

Item	Description
1	24"/610 mm or 48"/1219 mm Square Bar
2	Patented Vertically Adjustable Center Bracket
3	End Bracket

NOTE

- Both sizes FM/VdS/LPCB Approved, cULus Listed

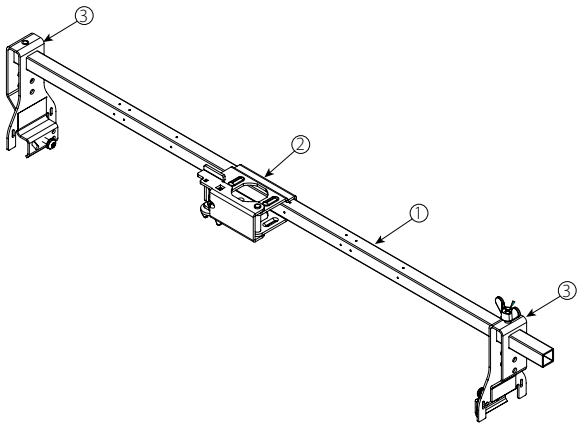

Style AB3

- Surface Mount Applications
- FM/LPCB Approved

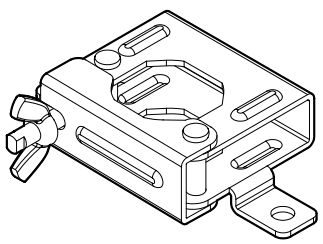

Style AB4

- Hard-Lid Ceilings with Hat Furring Channel Grid System

Item	Description
1	24"/610 mm or 48"/1219 mm Square Bar
2	Patented Vertically Adjustable Center Bracket
3	End Bracket for Hat Furring Channel

NOTE

- Both sizes FM/VdS/LPCB Approved, cULus Listed

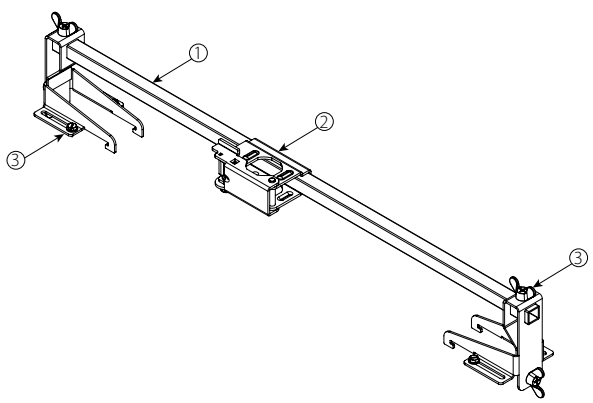

 © 2025 Victaulic Company. All rights reserved.

4.3 DIMENSIONS

Clearances

Series AH2 Braided Hose and Style AB2 Bracket with Suspended T-grid Ceilings

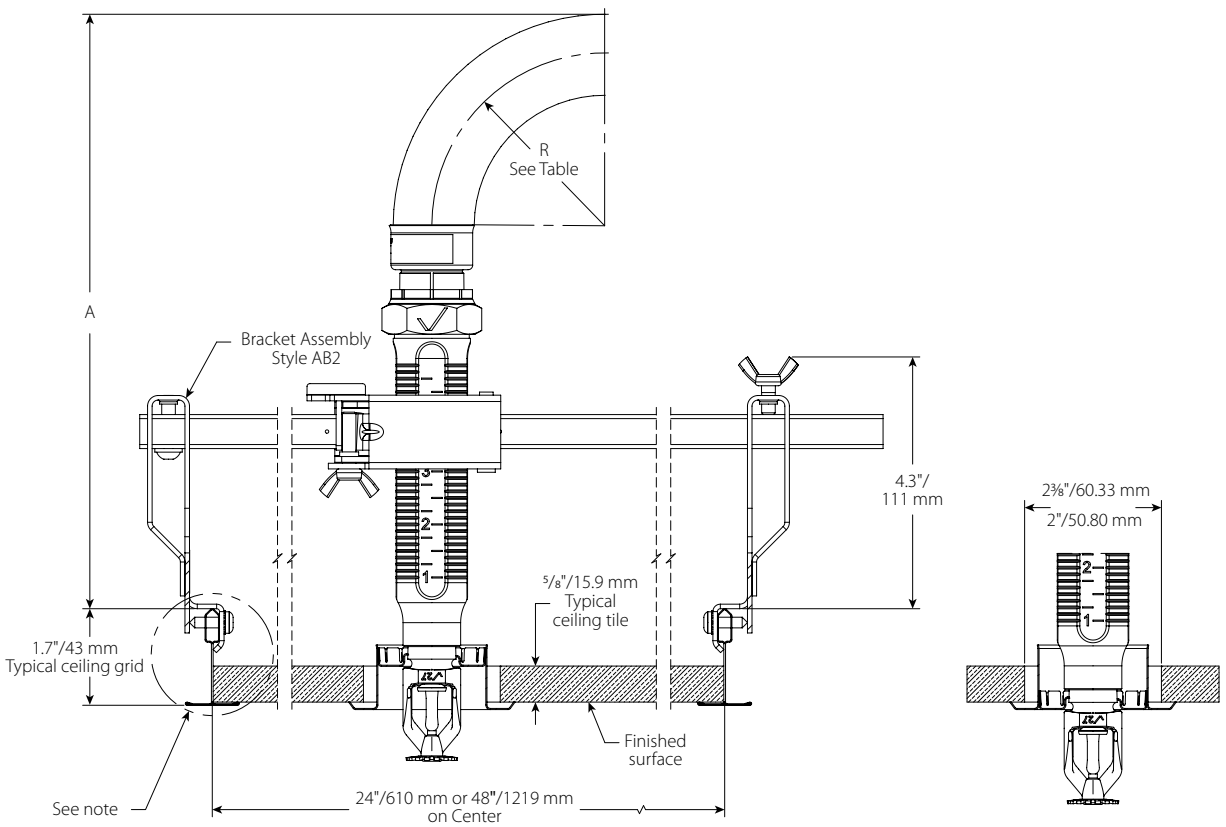

V2707 ¾"/19 MM MAX. RECESS

V2707 MAX. EXTENSION

Dimension		Hose Clearance							
		Straight Reducer						Long Elbow	Short Elbow
		V2707 ¾" Max Recess inches mm	V3802 ½" Max Recess inches mm	V2707 ¾" Max Recess inches mm	V3802 ½" Max Recess inches mm	V2707 ¾" Max Recess inches mm	V3802 ½" Max Recess inches mm	V2707 ¾" Max Recess inches mm	V3802 ½" Max Recess inches mm
R	Bend Radius	2.0 51		3.0 76.2		7.0 178		—	
A	Minimum Required Installation Space	8.6 218	10.1 269	9.6 244	11.1 281	13.6 345	15.1 383	5.8 147	5.8 147

NOTE

- Variations of ceiling grids, sprinkler heads, brackets, and hoses are permitted but may result in clearance differences from the figures above.

 © 2025 Victaulic Company. All rights reserved.

4.4 DIMENSIONS

Clearances

Series AH2 Braided Hose and Style AB2 Bracket with Wood/Metal Joist Ceilings

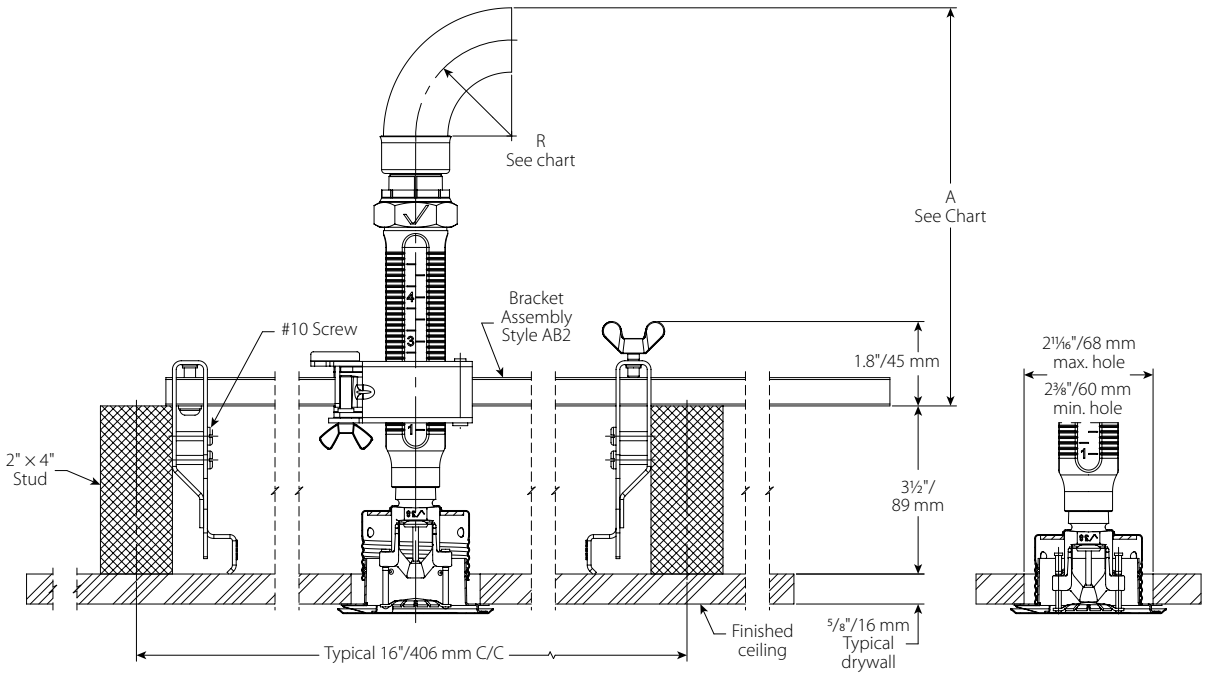

V38 ½"/13 mm MAX. RECESS **V38 MAX. EXTENSION**

Dimension		Hose Clearance								
		Straight Reducer								
		V2707 ¾" / 20 mm Max Recess inches mm	**V3802 ½" / 13 mm Max Recess** inches mm	**V2709 ¾" / 20 mm Sidewall** inches mm	**V2707 ¾" / 20 mm Max Recess** inches mm	**V3802 ½" / 13 mm Max Recess** inches mm	**V2709 ¾" / 20 mm Sidewall** inches mm	**V2707 ¾" / 20 mm Max Recess** inches mm	**V3802 ½" / 13 mm Max Recess** inches mm	**V2709 ¾" / 20 mm Sidewall** inches mm
R	Bend Radius	2.0 50			3.0 80			7.0 175		
A	Minimum Required Installation Space	6.2 158	7.6 193	6.1 155	7.2 183	8.6 218	7.1 180	11.2 285	12.6 320	11.1 282

Dimension		Hose Clearance		
		Long Elbow		Short Elbow
		V2707 ¾" / 20 mm Max Recess inches mm	**V2709 ¾" / 20 mm Sidewall** inches mm	**V3802 ½" / 13 mm Max Recess** inches mm
R	Bend Radius	—		—
A	Minimum Required Installation Space	3.3 84	3.6 91	3.3 84

NOTE

- Variations of ceiling grids, sprinkler heads, brackets, and hoses are permitted but may result in clearance differences from the figures above.

 © 2025 Victaulic Company. All rights reserved.

5.0 PERFORMANCE – FRICTION LOSS DATA

Series AH2 and AH2-CC Braided Hoses with Straight 5.75"/146 mm Reducers Style AB2, AB4, AB5 and AB10 VicFlex™ Brackets

Hose	Reducer		UL	
Length inches mm	**Type**	**Nominal Outlet Size** inches DN	**Equivalent Length of 1"/33.7mm Sch. 40 pipe** feet meters	**Maximum Bends**
31 790	Straight	½ DN15	15.0 4.6	3
			16.0 4.9	4
		¾ DN20	19.0 5.8	3
			20.0 6.1	4
36 915	Straight	½ DN15	18.0 5.5	3
			21.0 6.4	5
		¾ DN20	21.0 6.4	3
			23.0 7.0	5
48 1220	Straight	½ DN15	21.0 6.4	3
			32.0 9.8	8
		¾ DN20	26.0 7.9	3
			37.0 11.3	8
60 1525	Straight	½ DN15	27.0 8.2	3
			46.0 14.0	10
		¾ DN20	27.0 8.2	3
			46.0 14.0	10
72 1830	Straight	½ DN15	31.0 9.4	3
			55.0 16.8	12
		¾ DN20	30.0 9.1	3
			60.0 18.3	12

 © 2025 Victaulic Company. All rights reserved.

5.2 PERFORMANCE – FRICTION LOSS DATA

Series AH2 and AH2-CC Braided Hoses Equivalent Length Design Guide

Hose		Equivalent Length of 1"/33.7 mm Sch. 40 pipe									
Length inches mm	**Nominal Outlet Size** inches DN	**3 Bends** feet meters	**4 Bends** feet meters	**5 Bends** feet meters	**6 Bends** feet meters	**7 Bends** feet meters	**8 Bends** feet meters	**9 Bends** feet meters	**10 Bends** feet meters	**11 Bends** feet meters	**12 Bends** feet meters
31 790	½ DN15	15.0 4.6	16.0 4.9	–	–	–	–	–	–	–	–
	¾ DN20	19.0 5.8	20.0 6.1								
36 915	½ DN15	18.0 5.5	20.0 6.1	21.0 6.4	–	–	–	–	–	–	–
	¾ DN20	21.0 6.4	22.0 6.7	23.0 7.0							
48 1220	½ DN15	21.0 6.4	24.0 7.3	26.0 7.9	28.0 8.5	30.0 9.1	32.0 9.8	–	–	–	–
	¾ DN20	26.0 7.9	29.0 8.8	31.0 9.4	33.0 10.1	35.0 10.7	37.0 11.3				
60 1525	½ DN15	27.0 8.2	30.0 9.1	33.0 10.1	36.0 11.0	38.0 11.6	41.0 12.5	44.0 13.4	46.0 14.0	–	–
	¾ DN20	27.0 8.2	30.0 9.1	33.0 10.1	36.0 11.0	38.0 11.6	41.0 12.5	44.0 13.4	46.0 14.0		
72 1830	½ DN15	31.0 9.4	34.0 10.4	37.0 11.3	39.0 11.9	42.0 12.8	45.0 13.7	47.0 14.3	50.0 15.2	53.0 16.2	55.0 16.8
	¾ DN20	30.0 9.1	34.0 10.4	37.0 11.3	40.0 12.2	44.0 13.4	47.0 14.3	50.0 15.2	54.0 16.5	57.0 17.4	60.0 18.3

NOTES

- Values at 2"/51 mm center line bend radius for use with 5.75"/146 mm straight reducers

How to use this Design Guide:

- For some systems, it may be advantageous for the designer to calculate the system hydraulics using shorter equivalent lengths associated with fewer than the maximum allowable number of bends. In this case, the designer may select a design number of bends for the job and use the associated equivalent length from the design guide to determine the system hydraulics.
- It is possible that the actual installed condition of some of the flexible drops may have more bends than the designer selected. When this happens, the design guide may be used to find equivalent lengths based on the actual installed number of bends for particular sprinkler installations. The system hydraulics can be recalculated using actual equivalent lengths to verify the performance of the system.

 © 2025 Victaulic Company. All rights reserved.

5.3 PERFORMANCE – FRICTION LOSS DATA

Series AH2 and AH2-CC Braided Hoses
Style AB2, AB3, AB4, AB5, AB7, AB7 Adj., AB8, AB10, AB12, ABBA and ABMM VicFlex™ Brackets

Hose	Sprinkler	Reducer		FM	
Length inches mm	**K-factor** Imperial S.I.	**Nominal Outlet Size** inches DN	**Type**	**Equivalent Length of 1"/33.7 mm Sch. 40 Pipe** feet meters	**Maximum Bends**
31 790	5.6 8.1	½ DN15	Straight	13.8 4.2	2
			Elbow	23.5 7.2	
	8.0 11.5	¾ DN20	Straight	16.8 5.1	
			Elbow	16.8 5.1	
	11.2 16.1	¾ DN20	Straight	16.5 5.0	
			Elbow	17.8 5.4	
	14.0 20.2	¾ DN20	Straight	14.9 4.5	
			Elbow	15.5 4.7	
36 915	5.6 8.1	½ DN15	Straight	16.6 5.1	2
			Elbow	25.6 7.8	
	8.0 11.5	¾ DN20	Straight	20.0 6.1	
			Elbow	19.7 6.0	
	11.2 16.1	¾ DN20	Straight	19.5 5.9	
			Elbow	20.7 6.3	
	14.0 20.2	¾ DN20	Straight	19.4 5.9	
			Elbow	19.6 6.0	
48 1220	5.6 8.1	½ DN15	Straight	23.4 7.1	3
			Elbow	30.7 9.4	
	8.0 11.5	¾ DN20	Straight	27.8 8.5	
			Elbow	26.6 8.1	
	11.2 16.1	¾ DN20	Straight	26.7 8.1	
			Elbow	27.9 8.5	
	14.0 20.2	¾ DN20	Straight	30.3 9.2	
			Elbow	29.5 9.0	

FM NOTES

- The Series AH2 and AH2-CC hoses have been tested and Approved by FM Global for use in wet, dry and preaction systems per NFPA 13, 13R, and 13D and FM data sheets 2-0, 2-5, and 2-8. FM 1637 standard for safety include, but are not limited to, pressure cycling, corrosion resistance, flow characteristics, vibration resistance, leakage, mechanical and hydrostatic strength.
- EXAMPLE: A 48-inch hose installed with two 30° bends and two 90° bends is permitted and considered equivalent to the data in the table shown above. In this example, the total number of degrees is 240°, which is less than the allowable 270°.

 © 2025 Victaulic Company. All rights reserved.

7.0 REFERENCE MATERIALS – CHARACTERISTICS

VicFlex™ Maximum Load Values

Series AH2 Hose with 24" Bracket

Hose Length inches mm	Total Load		Maximum Uniform Load	
	lb	N	lb/linear ft	N/linear m
31 790	5.2	23	2.6	38
36 915	5.5	25	2.8	40
48 1220	6.3	28	3.1	46
60 1525	7.0	31	3.5	51
72 1830	7.7	34	3.9	57

Series AH2 Hose with 48" Bracket

Hose Length inches mm	Total Load		Maximum Uniform Load	
	lb	N	lb/linear ft	N/linear m
31 790	6.1	27	1.5	22
36 915	6.4	29	1.6	23
48 1220	7.2	32	1.8	26
60 1525	7.9	35	2.0	29
72 1830	8.7	39	2.2	32

Total Load is defined as the sum of the weights of the following:

- Water-filled flexible sprinkler hose with threaded end fittings, including a typical fire sprinkler
- Bracket assembly (any applicable Victaulic bracket model of the relevant associated size)

ASTM C 635: Suspension System Load-Carrying Capabilities (excerpted)

Suspension System	Actual Length	Minimum Allowable Uniform Load	
	ft/m	lb/linear ft	N/linear m
Direct Hung	Light	5.0	75.7
	Intermediate	12.0	181.0
	Heavy	16.0	241.7

SUMMARY: All direct-hung suspension system duty classifications per ASTM C 635 are able to withstand the maximum water-filled weight of the *VicFlex* sprinkler hose and bracket.

 © 2025 Victaulic Company. All rights reserved.

7.0 REFERENCE MATERIALS – CHARACTERISTICS (CONTINUED)

Flexible Hose In-Plane Bend Characteristics

One Bend	Two Bends	Three Bends
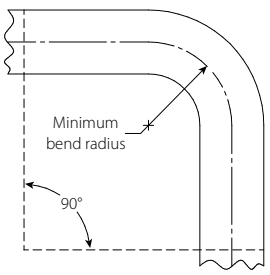	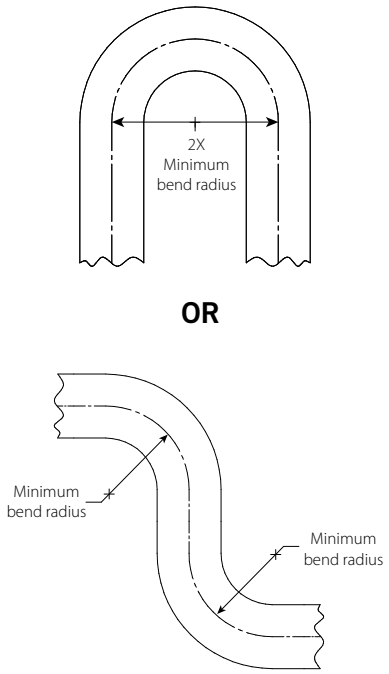	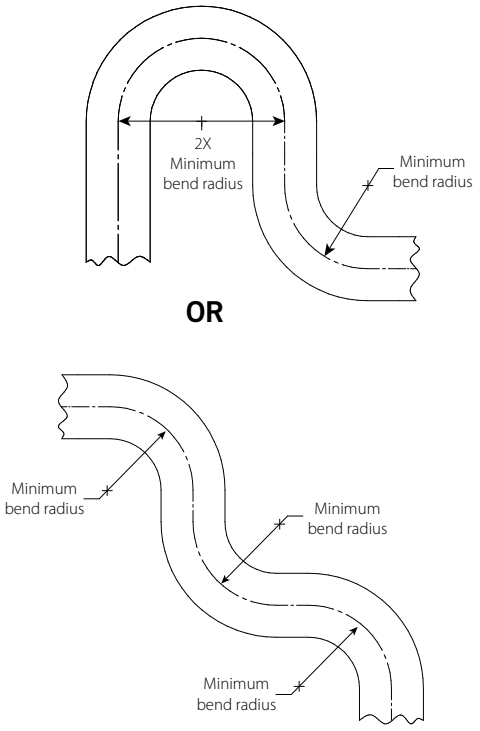

NOTE

- For out-of-plane (three-dimensional) bends, care must be taken to avoid imparting torque on the hose.

I-*VICFLEX*: Field Installation Handbook

I-RES: Field Installation Handbook

User Responsibility for Product Selection and Suitability

Each user bears final responsibility for determining the suitability of Victaulic products for their end-use application, in accordance with industry standards, project specifications, and Victaulic's published performance, maintenance, and safety data, as well as all warnings and installation instructions. Nothing in this or any other document, nor any verbal recommendation, advice, or opinion from any Victaulic employee, shall be deemed to alter, vary, supersede, or waive any provision of Victaulic Company's standard conditions of sale, warranty, installation instructions, or this disclaimer.

Installation

Always refer to and follow the Victaulic Installation Handbook or installation instructions for the product you are installing. Handbooks are included with each shipment of Victaulic products, providing complete installation and assembly data, and are available in PDF format on our website at victaulic.com.

Warranty

Refer to the Warranty section of the current Price List or contact Victaulic for details.

Intellectual Property Rights

No statement concerning the use of any material, product, service, or design is intended, or should be construed, to grant any license under any patent or other intellectual property right of Victaulic or any of its affiliates, or as a recommendation for the use of such material, product, service, or design in the infringement of any patent or other intellectual property right. The terms "Patented" or "Patent Pending" refer to design or utility patents or patent applications for articles and/or methods of use in the United States and/or other countries. Victaulic and all other Victaulic marks are the trademarks or registered trademarks of Victaulic Company, and/or its affiliated entities, in the U.S. and/or other countries.

Note

All products bearing a Victaulic trademark are manufactured by Victaulic or to Victaulic specifications. All products are to be installed only in accordance with the applicable Victaulic installation instructions. Victaulic reserves the right to change product specifications, designs and standard equipment without notice and without incurring obligations.

 © 2025 Victaulic Company. All rights reserved.

Victaulic® Series UMC (Universal Manifold Check) Assembly

1.0 PRODUCT DESCRIPTION

Available Sizes

- 1 ¼ – 8"/DN32 – DN200

Maximum Working Pressure

- Up to 300 psi/2068 kPa/20.6 bar

Application

- Floor control assemblies may be utilized to meet the zone separation requirements of multistory applications exceeding two stories in height or whenever separate control or zoning is specified.
- Shotgun riser assemblies may be utilized in vertical orientations on individual system risers.

Configurations

- Optional control valve: Series 705 Butterfly Valve or Series 728 Ball Valve
- Factory assembled right-handed/left-handed (field changeable if necessary)

Included Components

- Integrated Check Valve
- Series UTD (Universal Test Drain) with integrated Series ARV (Adjustable Relief Valve)
- Quick Drain Hose
- Vane Type Flow Switch
- 1 ¼ – 2"/DN32 – DN50 UMC use saddle type 2" VSR flow switch
- 2 ½ – 3"/73mm – DN80 and 8"/DN200 UMC use saddle type VSR flow switch for corresponding valve size
- 4 – 6"/DN100-DN150 UMC use VSR-M flow switch with flange adapter
- 1 ¼ – 8"/DN32 – DN200 System-side pressure gauge 400 psi/2750 kPa/27.5 bar
- 1 ¼ – 3"/DN32-DN80 supply side ½" plugged port located on control valve (if using as a system riser, pressure gauge ordered separately)
- 4 – 8"/DN100 – DN200 Supply-side pressure gauge 400 psi/2750 kPa/27.5 bar

Available End Connections

- Victaulic Original Groove System (OGS) standard groove

2.0 CERTIFICATION/LISTINGS

c UL us LISTED FM

ALWAYS REFER TO ANY NOTIFICATIONS AT THE END OF THIS DOCUMENT REGARDING PRODUCT INSTALLATION, MAINTENANCE OR SUPPORT.

 © 2022 Victaulic Company. All rights reserved.

4.0 DIMENSIONS (CONTINUED)

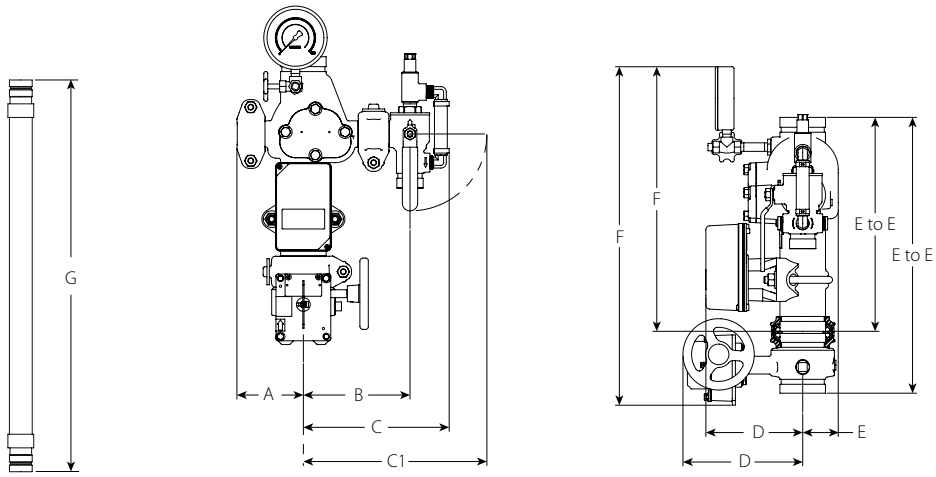

Size		Dimensions											Series UTD Valve Size (Nominal)	Series UTD Test Orifice	G Quick Drain Hose Length	Weight	
Nominal	Actual Outside Dia.	E to E with control valve	E to E without control valve	A	B	C	C-1	D with control valve	D without control valve	E	F with control valve	F without control valve				Approx. (Each) with control valve	Approx. (Each) without control valve
inches DN	inches mm	inches mm											inches DN	K-Factor S.I.	inches mm	lb kg	lb kg
2 DN50	2.375 60.3	17.50 445	13.13 333	3.63 92	5.88 149	8.25 210	10.00 254	6.38 162	6.00 152	2.00 51	21.13 537	16.38 416	1.00 25	2.8 4.0	24.00 610	36.0 16.3	25.0 11.3
2½	2.875 73.0	17.38 441	13.50 343	4.25 108	6.75 171	9.25 235	11.50 292	7.50 191	6.13 156	2.25 57	21.25 540	16.63 422	1.25 32	4.2 6.1	24.00 610	39.0 17.7	28.0 12.7
DN65	3.000 76.1	17.38 441	13.50 343	4.25 108	6.75 171	9.25 235	11.50 292	7.50 191	6.13 156	2.25 57	21.25 540	16.63 422	1.25 32	4.2 6.1	24.00 610	39.0 17.7	28.0 12.7
3 DN80	3.500 88.9	17.63 448	13.75 349	4.38 111	7.13 181	9.63 244	11.88 302	7.75 197	6.38 162	2.38 60	21.13 537	16.50 419	1.25 32	4.2 6.1	24.00 610	44.0 20.0	31.0 14.1
4 DN100	4.500 114.3	19.50 495	14.63 371	5.75 146	8.75 222	11.63 295	14.88 378	8.75 222	7.00 178	3.00 76	22.75 578	17.63 448	2.00 51	5.6 8.1	36.00 914	65.0 29.5	52.0 23.6
	6.500 165.1	23.50 597	17.38 441	6.88 175	10.00 254	12.88 327	16.13 410	11.38 289	8.00 203	3.88 98	25.88 657	19.75 502	2.00 51	5.6 8.1	36.00 914	100.0 45.4	73.0 33.1
6 DN150	6.625 168.3	23.50 597	17.38 441	6.88 175	10.00 254	12.88 327	16.13 410	11.38 289	8.00 203	3.88 98	25.88 657	19.75 502	2.00 51	5.6 8.1	36.00 914	100.0 45.4	73.0 33.1

NOTES

- ½" system supply pressure gauge port located on the control valve for sizes 2 – 3"/DN50 – DN80 (gauge sold separately)
- Included System supply pressure gauge located on the control valve for sizes 4 – 6"/DN100 – DN150
- When Series UTD Valve Size (Nominal) is 1"/25 mm, flexible drain hose connection utilizes FireLock IGS™ groove profile

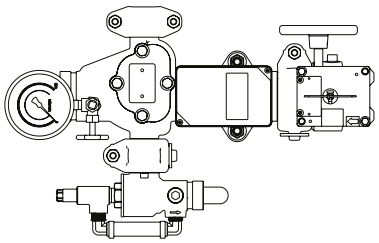

Horizontal Install Left Hand with Control Valve

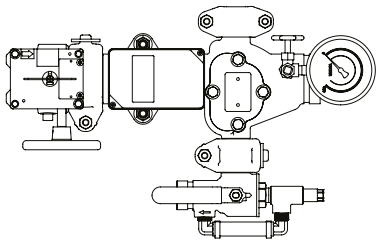

Horizontal Install Right Hand with Control Valve

 © 2022 Victaulic Company. All rights reserved.

5.0 PERFORMANCE

Size		Equivalent Length of Sch. 40 Pipe[1]		Flow Characteristics		
Nominal inches DN	**Actual Outside Diameter** inches mm	**with control valve** feet meters	**without control valve** feet meters	**Cv/Kv Values with control valve** Full Open	**Cv/Kv Values without control valve** Full Open	**Maximum Working Pressure** psi kPa
1 ¼ DN32	1.660 42.4	8.3 2.5	8.0 2.4	38.52 33	35.59 31	300 2068
1 ½ DN40	1.900 48.3	10.1 3.1	10.0 3.0	56.75 49	57.43 50	300 2068
2 DN50	2.375 60.3	21.1 6.4	15.8 4.8	71.43 62	83.14 72	300 2068
2 ½	2.875 73.0	19.6 6.0	15.8 4.8	112.43 97	125.84 109	300 2068
DN65	3.000 76.1	19.6 6.0	15.8 4.8	112.43 97	125.84 109	300 2068
3 DN80	3.500 88.9	20.0 6.1	13.3 4.0	199.32 172	241.43 209	300 2068
4 DN100	4.500 114.3	17.6 5.4	12.9 3.9	425.88 368	499.23 432	300 2068
	6.500 165.1	40.6 12.4	32.0 9.8	834.97 722	932.83 807	300 2068
6 DN150	6.625 168.3	40.6 12.4	32.0 9.8	834.97 722	932.83 807	300 2068
8 DN200	8.625 219.1	60.8 18.5	45.8 13.9	1376.8 1191	1556.57 1346	300 2068

[1] Equivalent length of Sch 40 pipe calculated using the Hazen-Williams formula with a roughness coefficient of C=120

 © 2022 Victaulic Company. All rights reserved.

5.0 PERFORMANCE (CONTINUED)

Series UMC with Control Valve

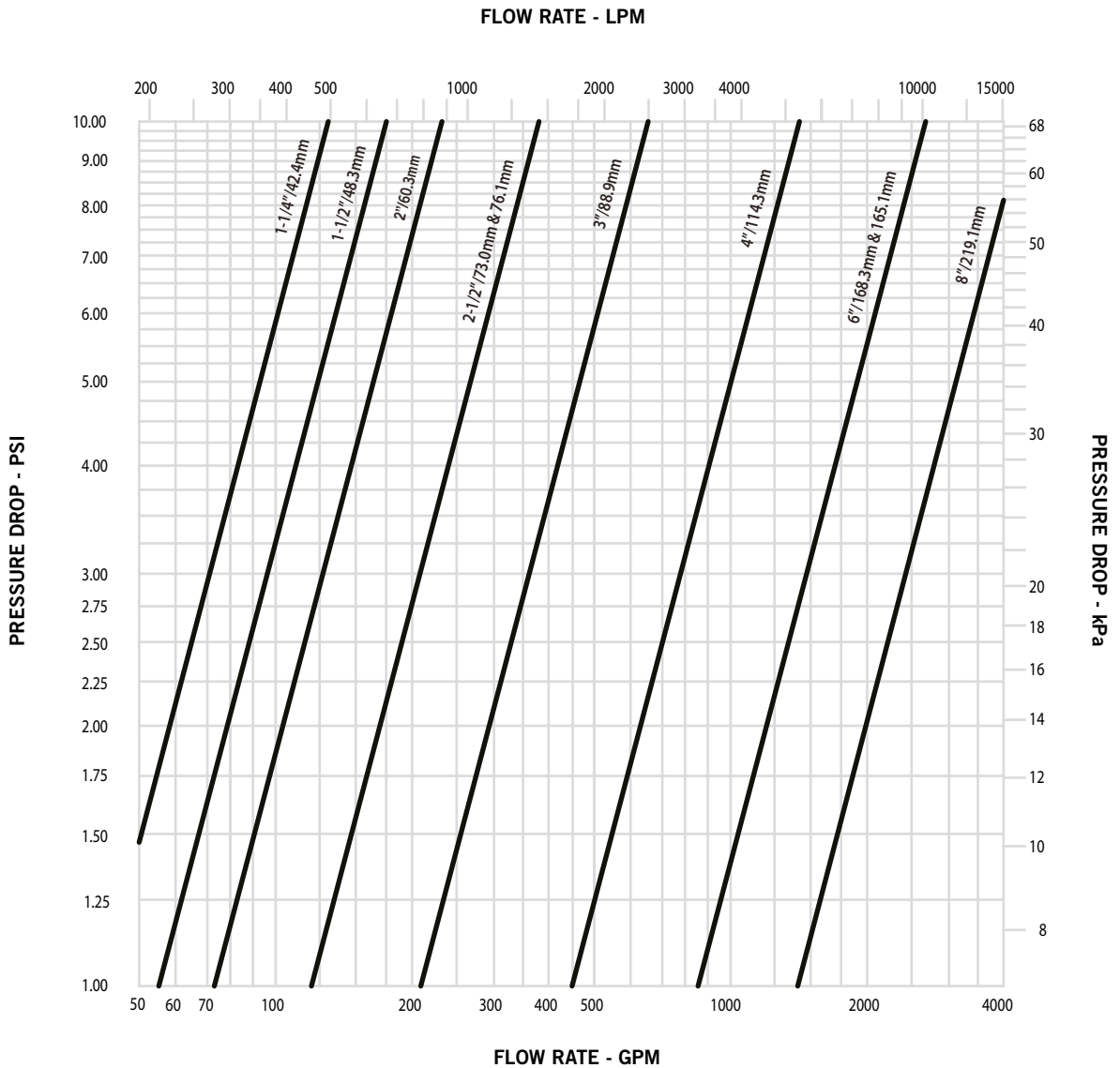

NOTE

- Includes friction loss across flow switch

 © 2022 Victaulic Company. All rights reserved.

6.0 NOTIFICATIONS

WARNING

- **Read and understand all instructions before attempting to install, remove, adjust, or maintain any Victaulic piping products.**
- **Depressurize and drain the piping system before attempting to install, remove, adjust, or maintain any Victaulic piping products.**
- **Wear safety glasses, hardhat, and foot protection.**

Failure to follow these instructions could result in death or serious personal injury and property damage.

7.0 REFERENCE MATERIALS

10.17: FireLock® Ball Valve
10.54: Victaulic FireLock™ Innovative Groove System I IGS™
10.64: Victaulic® FireLock™ Installation-Ready™ Rigid Couplings
10.81: FireLock® Butterfly Valve
30.71: Series UM Universal Manifold Assembly
30.73: Victaulic® Series UTD Universal Test and Drain
30.74: Victaulic® Series ARV Adjustable Relief Valve
I-100: Field Installation Handbook
I-UMC: Series UMC Universal Manifold Check Assembly

User Responsibility for Product Selection and Suitability
Each user bears final responsibility for making a determination as to the suitability of Victaulic products for a particular end-use application, in accordance with industry standards and project specifications, as well as Victaulic performance, maintenance, safety, and warning instructions. Nothing in this or any other document, nor any verbal recommendation, advice, or opinion from any Victaulic employee, shall be deemed to alter, vary, supersede, or waive any provision of Victaulic Company's standard conditions of sale, installation guide, or this disclaimer.

Intellectual Property Rights
No statement contained herein concerning a possible or suggested use of any material, product, service, or design is intended, or should be constructed, to grant any license under any patent or other intellectual property right of Victaulic or any of its subsidiaries or affiliates covering such use or design, or as a recommendation for the use of such material, product, service, or design in the infringement of any patent or other intellectual property right. The terms "Patented" or "Patent Pending" refer to design or utility patents or patent applications for articles and/or methods of use in the United States and/or other countries.

Note
This product shall be manufactured by Victaulic or to Victaulic specifications. All products to be installed in accordance with current Victaulic installation/assembly instructions. Victaulic reserves the right to change product specifications, designs and standard equipment without notice and without incurring obligations.

Installation
Reference should always be made to the Victaulic installation handbook or installation instructions of the product you are installing. Handbooks are included with each shipment of Victaulic products, providing complete installation and assembly data, and are available in PDF format on our website at www.victaulic.com.

Warranty
Refer to the Warranty section of the current Price List or contact Victaulic for details.

Trademarks
Victaulic and all other Victaulic marks are the trademarks or registered trademarks of Victaulic Company, and/or its affiliated entities, in the U.S. and/or other countries.

 © 2022 Victaulic Company. All rights reserved.

Series UMC Universal Manifold Check Assembly

(With or Without Control Valve)

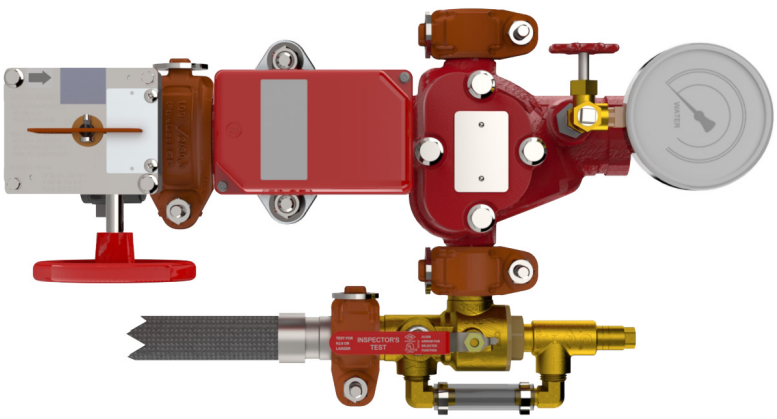

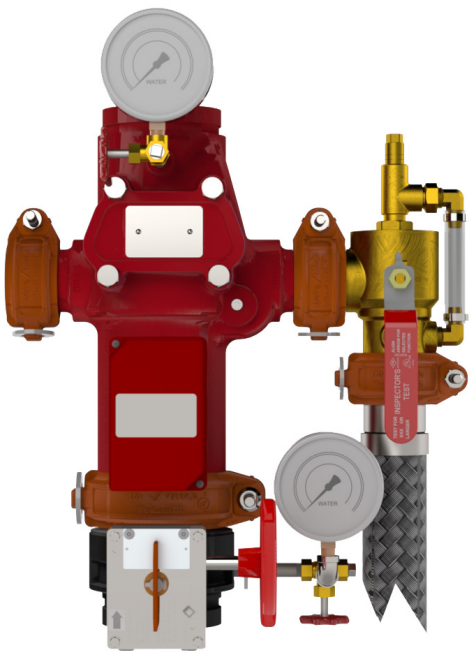

⚠ WARNING

- Read and understand all instructions before attempting to install any Victaulic products.
- Always verify that the piping system has been completely depressurized and drained immediately prior to installation, removal, adjustment, or maintenance of any Victaulic products.
- Confirm that any equipment, branch lines, or sections of piping that may have been isolated for/during testing or due to valve closures/positioning are identified, depressurized, and drained immediately prior to installation, removal, adjustment, or maintenance of any Victaulic products.
- Wear safety glasses, hardhat, and foot protection.

Failure to follow these instructions could result in death or serious personal injury and property damage.

- The Series UMC Universal Manifold Check Assembly shall be used only in fire protection systems that are designed and installed in accordance with current, applicable National Fire Protection Association (NFPA 13, 13D, 13R, etc.) standards, or equivalent standards, and in accordance with applicable building and fire codes. These standards and codes contain important information regarding protection of systems from freezing temperatures, corrosion, mechanical damage, etc.
- These installation instructions are intended for an experienced, trained installer. The installer shall understand the use of this product and why it was specified for the particular application.
- The installer shall understand common industry safety standards and potential consequences of improper product installation.

Failure to follow installation requirements and local and national codes and standards could compromise system integrity or cause system failure, resulting in death or serious personal injury and property damage.

INTRODUCTION

The Series UMC Universal Manifold Check Assembly is a complete floor control valve assembly or shotgun riser assembly:

FLOOR CONTROL VALVE ASSEMBLY – The UMC meets NFPA 13 requirements for "Floor Control Valve Assemblies" where multi-story buildings require zoning by floor, or whenever separate control and floor zoning is specified. Per NFPA 13 requirements, a system pressure gauge is provided on the system side of the clapper. If specified, a supply-side gauge may be added to the provided ½-inch NPT port on the control valve.

SHOTGUN RISER ASSEMBLY – Shotgun riser assemblies are typically installed in vertical orientations on individual system risers. The 4 – 8-inch/114.3 – 219.1-mm sizes of the UMC are provided with a supply-side and system-side gauge. The supply-side gauge is located at the ½-inch NPT port on the control valve.

NOTICE

- **NFPA 13 requires a test connection capable of providing a flow rate equal to or less than one sprinkler of the smallest orifice in the system.**
- **Drawings and/or pictures in this manual may be exaggerated for clarity.**
- **This product and this installation, maintenance, and testing manual contain trademarks, copyrights, and/or patented features that are the exclusive property of Victaulic.**

ASSEMBLY DRAWINGS

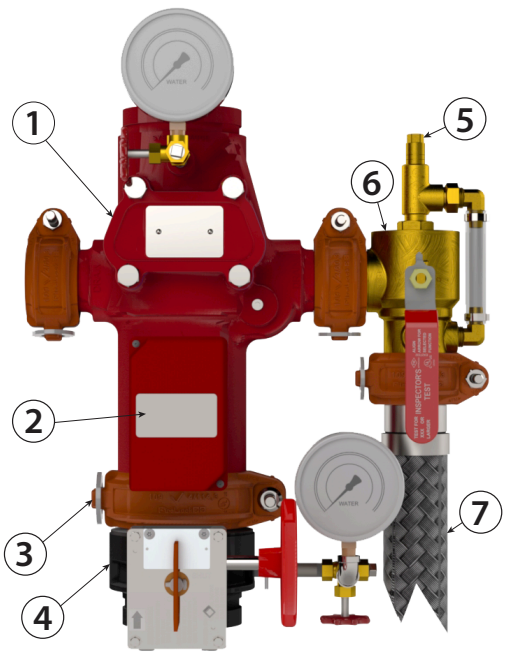

1 ¼ – 6-INCH/42.4 – 168.3-MM SIZES
(4-INCH/114.3-MM ASSEMBLY SHOWN ABOVE)

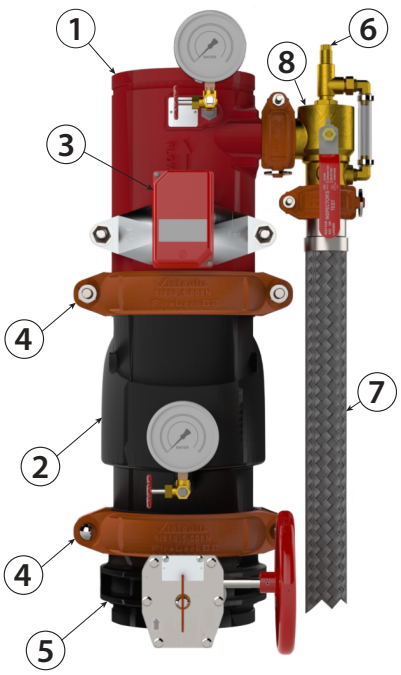

8-INCH/219.1-MM SIZE

Item	Description for 1 ¼ – 6-inch/42.4 – 168.3-mm Sizes
1	UMC Body with Removable Cover Plate*
2	Flow Switch
3	Rigid Coupling
4	Control Valve with Internal Supervisory Switch (Optional)†
5	Adjustable Pressure Relief Valve (ARV)***
6	Universal Test and Drain Assembly (UTD)‡
7	Stainless Steel Braided Flexible Drain Hose Assembly (Grooved x Grooved Connections)

Item	Description for 8-inch/219.1-mm Size
1	UM Body**
2	Check Valve
3	Flow Switch
4	Rigid Coupling
5	Control Valve with Internal Supervisory Switch (Optional)†
6	Adjustable Pressure Relief Valve (ARV)***
7	Stainless Steel Braided Flexible Drain Hose Assembly (Grooved x Grooved Connections)
8	Universal Test and Drain Assembly (UTD)‡

* UL Listed under File EX27312 Riser Manifold with Flow Detection with Check Valve

** UL Listed under File EX27312 Riser Manifold with Flow Detection

† The control valve for 1 ¼ – 1 ½-inch/42.4 – 48.3-mm sizes is the Victaulic Series 728 FireLock™ Ball Valve.
The control valve for 2 – 8-inch/60.3 – 219.1-mm sizes is the Victaulic Series 705 FireLock™ Butterfly Valve

*** NFPA 13 requirement that relief valve is UL Listed – Pre-piped to drain, preset for 175 psi/12 Bar, and adjustable to 310 psi/21 Bar for high-pressure system conditions and hydrostatic tests. NOTE: It is not necessary to remove the Adjustable Pressure Relief Valve (ARV) to perform a hydrostatic test. The ARV may be adjusted temporarily to a pressure above the test pressure.

‡ For flow testing, the 1-inch/33.7-mm Universal Test and Drain Assembly (UTD) utilizes a K2.8 test orifice; the 1 ¼-inch/42.4-mm UTD utilizes a K4.2 test orifice; and the 2-inch/60.3-mm UTD utilizes a K5.6 test orifice. Operating positions for the UTD are: Off (normal operating condition), Drain (full drain), and Test (flow through K-factor orifice).

LEFT-HANDED VERSUS RIGHT-HANDED ORIENTATIONS

Both the shotgun riser assembly and the floor control valve assembly are available as left- or right-handed orientations. While looking at the faceplate with the UMC in the vertical position and flow upward (shotgun riser), the position of the UTD determines the orientation of the valve.

NOTICE

- **The 8-inch/219.1-mm version is available only in the right-hand orientation.**
- **Field relocation of the UTD to the opposing "mirrored port" is allowed and does not affect UMC Listings and Approvals.**

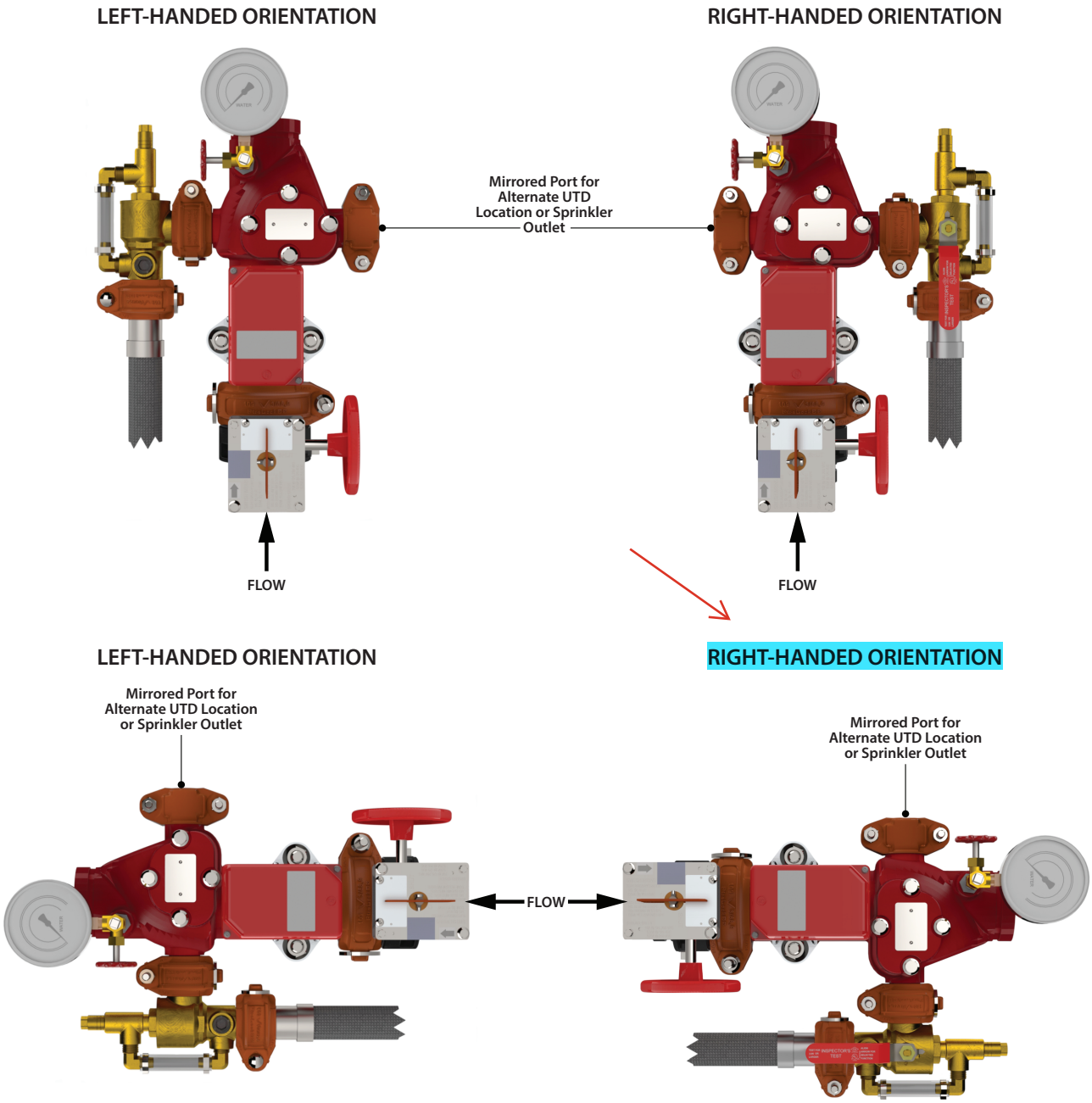

REPRESENTATIVE OF 1¼ - 6-INCH/42.4 - 168.3-MM SIZES
(3-INCH/88.9-MM SIZE SHOWN)

NOTES:
The control valve for 1¼ – 1½-inch/42.4 – 48.3-mm sizes is the Victaulic Series 728 FireLock™ Ball Valve.
The control valve for 2 – 6-inch/60.3 – 168.3-mm sizes is the Victaulic Series 705 FireLock™ Butterfly Valve.
The mirrored port for 2½ – 3-inch/73.0 – 88.9-mm sizes contains a Style 115 Reducing Coupling (1¼-inch/42.4-mm OGS x 1-inch/33.7-mm IGS).

INSTALLATION

- The UMC is shipped preassembled in a single box. Confirm that adequate space is available for the assembly.
- Flush water supply piping. Before installing the UMC, flush the water supply piping thoroughly to remove all foreign material.
- The UMC shall be installed in accordance with all applicable installation standards (i.e. NFPA 13 or other).
- Protect system from freezing temperatures. The UMC and supply piping SHALL NOT be located in an area where exposure to freezing temperatures or mechanical damage may occur. Install the UMC in an accessible and visible location that is maintained at or above a minimum temperature of 40°F/4°C.
- Confirm material compatibility. It is the system designer's responsibility to confirm material compatibility of the UMC and associated accessories when a corrosive environment or contaminated water is present.
- The UMC may be installed in the horizontal or vertical (flow upward) orientation.
- All electrical connections shall be made per the applicable installation standard and/or the National Electric Code (i.e. NFPA 70, NFPA 72 or other).
- Verify that the braided flexible drain hose does not become kinked or permanently deformed when routing it to the drain connection. The flexible braided drain hose is intended for use only downstream of a drain valve and shall not be used anywhere else within the system.
- All coupling connections shall be made by referencing the current version of the installation instructions, which can be downloaded by scanning the QR code below. All coupling connections shall be checked to verify proper installation, in accordance with the following instructions.

Scan Code for Access to the I-100 Field Installation Handbook on victaulic.com

Style 009N Installation Instructions
- For connections to the control valve on certain UMC sizes
- For connections to the drain hoses on 2½ inch/73.0 mm and larger UMC sizes

Style 108 Installation Instructions
- For connections to the drain hose on certain UMC sizes

Style 109 Installation Instructions
- For connection to the control valve on certain UMC sizes
- For connections to the drain hose on certain UMC sizes

Style 115 Installation Instructions
- For the mirrored port connection of 2½ – 3-inch/73.0 – 88.9-mm sizes

- Per NFPA 13, proper hydrostatic test procedures shall be followed. **NOTE: It is not necessary to remove the ARV to perform a hydrostatic test. The ARV may be adjusted temporarily to a pressure above the test pressure. Verify that the ARV is returned to its normal setting after completing the hydrostatic test.**

FLOW SWITCH WIRING

The flow switch includes two sets of switches. One set can be used to activate the central fire alarm system, while the other set can be used to activate a local alarm, if necessary. Refer to the schematic below for the wiring diagram.

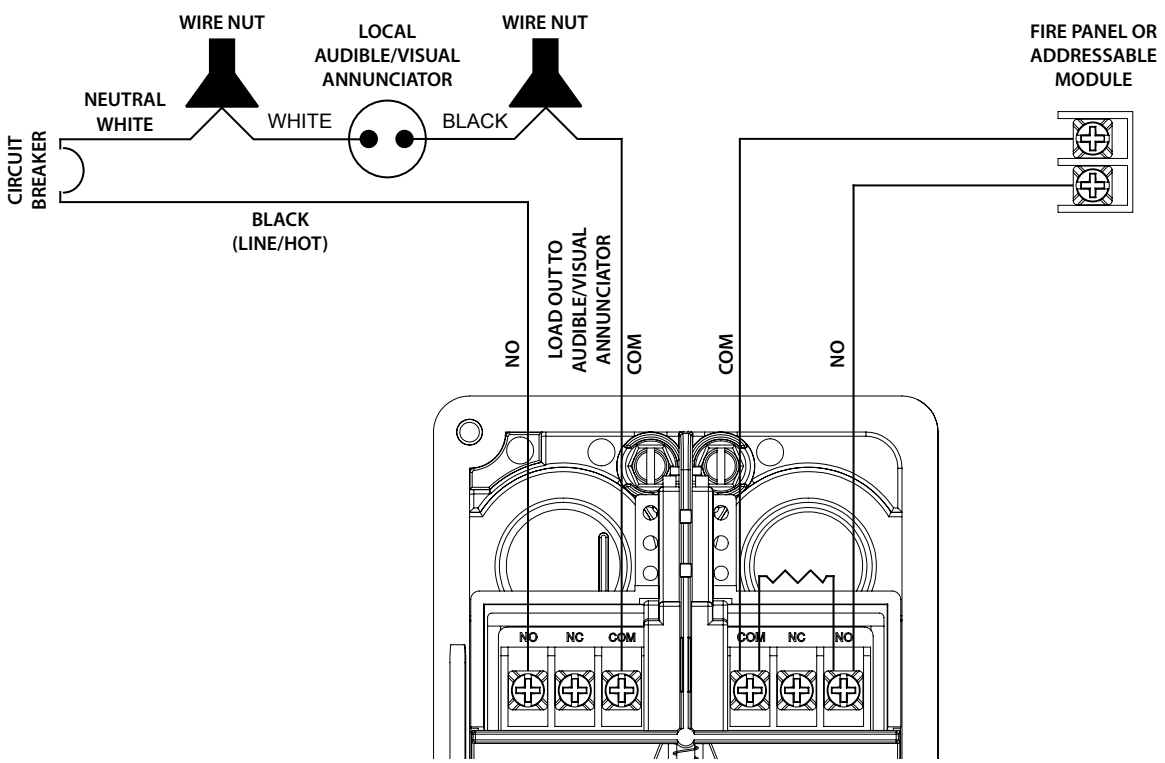

CONTROL VALVE WIRING

The following wiring instructions apply to both the Victaulic Series 728 FireLock™ Ball Valve and Victaulic Series 705 FireLock™ Butterfly Valve.

Scan QR code for access to the Series 728 Installation and Wiring Instructions

Scan QR code for access to the Series 705 Installation and Wiring Instructions

1. The supervisory switch contains two single-pole, double-throw, prewired switches.
2. Switches are rated:

   10 amps @ 125 or 250 VAC/60 Hz
   0.50 amps @ 125 VDC
   0.25 amps @ 250 VDC
3. **Switches supervise the control valve in the "fully opened" position. Switches will not supervise the valve in the "closed" position.**
4. One switch contains two #18 insulated wires per terminal, which permit complete supervision of leads (refer to diagrams and notes below). The second switch contains one #18 insulated wire per terminal. This double circuit provides flexibility to operate two electrical devices at separate locations, such as an indicating light and an audible alarm, in the area that the control valve is installed.
5. A #14 insulated ground lead (green) is provided.

Switch #1 = S1 For connection to the supervisory circuit of a UL Listed alarm control panel

Switch #2 = S2 Auxiliary switch that may be connected to auxiliary devices, per the authority having jurisdiction

S1
- Normally Closed Contact: (2) Blue
- Switch is Open When Valve is in "Fully Opened" Position
- Common Contact: (2) Yellow

S2
- Normally Closed Contact: Blue with Orange Stripe
- Normally Open Contact: Brown with Orange Stripe
- Common Contact: Yellow with Orange Stripe

Only S1 (two leads per terminal) may be connected to the fire alarm control panel.

Connection of alarm switch wiring shall be in accordance with NFPA 72, and the auxiliary switch per NFPA 70 (NEC).

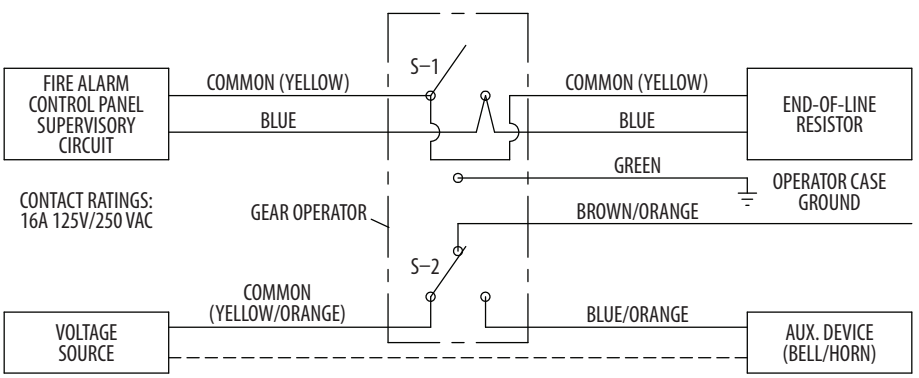

VALVE WIRING SHOWN WITH VALVE IN OPEN POSITION

ARV SETTING PROCEDURE

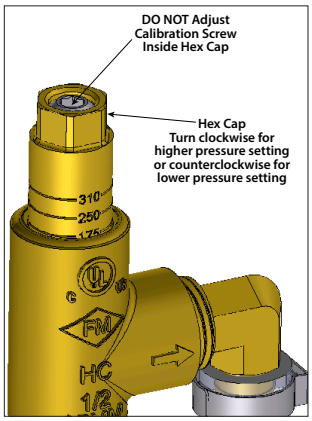

- The 310-psi/21.4-Bar ARV is factory set to fully relieve at approximately 175 psi/12 Bar.
- During hydrostatic testing required per NFPA 13 System Acceptance Testing, the ARV may be set to a higher pressure; however, it shall be reset to relieve at a pressure that is in accordance with requirements of the local authority having jurisdiction and NFPA 13.
- To reset the ARV, use an adjustable crescent wrench to turn the hex cap clockwise for a higher pressure setting or counter-clockwise for a lower pressure setting. Use the calibrated lines on the stem for an approximate relief pressure setting. One full turn of the hex cap will result in approximately 25 psi/1.7 Bar increase or decrease.
- DO NOT adjust the calibration screw inside the hex cap, as indicated in the drawing to the left.

NOTE: An ARV replacement kit is available for order. This kit includes the ARV, a hose, and two worm gear hose clamps.

TESTING

Refer to NFPA 25, FM Datasheets, or any applicable local requirements to perform testing. The authority having jurisdiction in the area may require these tests on a more frequent basis. Verify these requirements by contacting the authority having jurisdiction in the affected area.

Before proceeding with any tests involving water flow, the following precautions shall be taken.

NOTE: It is not necessary to remove the ARV to perform a hydrostatic test. The ARV may be adjusted temporarily to a pressure above the test pressure. Verify that the ARV is returned to its normal setting after completing the hydrostatic test.

1. Check for alarm connections to a central station or fire department. If such connections are found, notify the authority having jurisdiction, remote station alarm monitors, and those in the affected area before proceeding with testing. **NOTE:** A main drain test may also operate local fire alarms, unless they are temporarily disabled.
2. Check the location where the test connection discharges to verify that all is clear and that there is no possibility of water flow causing property damage or personal injury.
3. Check the end of the test connection to verify that it is unobstructed. To achieve a satisfactory test, there shall be an unrestricted flow of water when the handle on the UTD is in the “DRAIN” (full drain) position.
4. Move the handle on the UTD to the “TEST” (flow through K-factor orifice) position. Verify that an alarm condition results within the timeframe specified by the local authority having jurisdiction.
5. Move the handle on the UTD to the “OFF” (normal operating) position. **NOTE:** The ARV is located on the upstream side of the UTD and will continue to vent excess system pressure with the handle on the UTD in the “OFF” (normal operating) position.

NFPA 13 Hydrostatic Testing Procedure Required for System Acceptance Testing

- NFPA 13 requires an initial hydrostatic test of the sprinkler system to ensure that everything is properly assembled and capable of holding system pressure.
- This initial hydrostatic test requires the system to be pressurized to either 200 psi/13.8 Bar or 50 psi/3.4 Bar over the maximum expected system pressure (whichever is greater).
- The system shall maintain this pressure, without a loss, for a period of 2 hours.
- During this procedure, the ARV can remain in the system as long as it is set to a pressure where it will not relieve during the test.
- For systems being tested at 225 psi/15.5 Bar or less, it is recommended that the ARV set pressure be adjusted to 250 psi/17.2 Bar or greater for the duration of the test.
- For systems being tested at pressures higher than 225 psi/15.5 Bar, it is recommended that the ARV set pressure be adjusted to a minimum of 25 psi/1.7 Bar over the required hydrostatic test pressure.
- For systems where the ARV cannot be set to a pressure that is 25 psi/1.7 Bar over the required hydrostatic test pressure, it is recommended to plug the ARV port during the initial hydrostatic test.
- After the hydrostatic test procedure is complete, the ARV shall be set in accordance with the “ARV Setting Procedure” section on page 5.

REQUIRED INSPECTIONS AND/OR MAINTENANCE

⚠WARNING

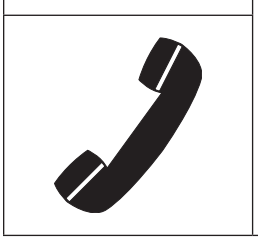

- **Depressurize and drain the piping system before attempting to remove the cover plate from the UMC body.**
- **The building owner or their representative is responsible for maintaining the fire protection system in proper operating condition.**
- **To ensure proper system operation, refer to NFPA 25, FM Datasheets, or any applicable local requirements for valve inspection requirements. The authority having jurisdiction in the area may require these inspections on a more frequent basis. Verify these requirements by contacting the authority having jurisdiction in the affected area, and always refer to the instructions in this manual for additional inspection and testing requirements.**
- **The frequency of inspections shall be increased in the presence of contaminated water supplies, corrosive/scaling water supplies, and corrosive atmospheres.**
- **Any activities that require taking the valve out of service may eliminate the fire protection provided. A fire patrol is strongly recommended for the affected areas.**
- **Before servicing or testing the system, notify the authority having jurisdiction.**

Failure to follow these instructions could cause system failure, resulting in death or serious personal injury and property damage.

Refer to NFPA 25, FM Datasheets, or any applicable local requirements to perform inspections and/or maintenance. The authority having jurisdiction in the area may require inspections and/or maintenance on a more frequent basis. Verify these requirements by contacting the authority having jurisdiction in the affected area.

1. Notify the authority having jurisdiction, remote station alarm monitors, and those in the affected area before performing any inspections, testing, or maintenance that requires closing the control valve.
2. Verify that the system is completely depressurized and drained immediately prior to removing the cover plate. Follow steps 2 - 5 of the “Clapper Removal and Replacement” section on the following page to remove the cover plate. **NOTE:** Keep the handle on the UTD in the “DRAIN” (full drain) position during any maintenance.
3. The water supply shall be free from sediment or other debris. During an inspection of a water control valve, if sediment or other debris is noted, a further examination of internal valve parts is required. Remove all deposits from all operating components and ports.

⚠CAUTION

- **DO NOT use solvents or abrasives on the clapper facing or near the seat ring.**

Failure to follow this instruction could prevent the clapper from sealing, resulting in valve leakage.

Clapper Facing for 6-inch/168.3-mm and Smaller UMC Sizes: The clapper facing shall be checked for damage or wear. Wipe away any contaminants, dirt, and mineral deposits. **DO NOT USE SOLVENTS OR ABRASIVES.** Compounds that could damage the clapper facing shall never be used. If any damage or wear is present (i.e. foreign material embedded in the surface or cuts/tears), the clapper shall be replaced by following all steps in the "Clapper Removal and Replacement" section on the following page.

Seat Ring for 6-inch/168.3-mm and Smaller UMC Sizes: Wipe away any contaminants, dirt, and mineral deposits from the seat ring. **DO NOT USE SOLVENTS OR ABRASIVES**. If the seat ring contains any damage (nicks, embedded particles, etc.), the entire UMC assembly shall be replaced.

Flow Switch (All Sizes):

Periodic testing and inspection is required for the flow switch. Scan the applicable QR code provided for complete flow switch and paddle replacement instructions.

Scan QR code for flow switch used on 4-inch/114.3-mm and 6-inch/168.3-mm UMC sizes

Scan QR code for flow switch used on all other UMC sizes

ARV (All Sizes): The ARV is not field serviceable. If leakage is observed, test the pressure setting by referring to the "ARV Setting Procedure." The ARV shall be replaced if it does not respond to field adjustments. **NOTE:** Visual calibration lines on the ARV are used for approximate adjustment. Verify the pressure setting with a calibrated pressure gauge.

UTD (All Sizes): The UTD does not require any regularly scheduled maintenance and is not field serviceable.

REPLACEMENT KIT INSTRUCTIONS

Full Clapper Replacement Kit for 6-inch/168.3-mm and Smaller Sizes

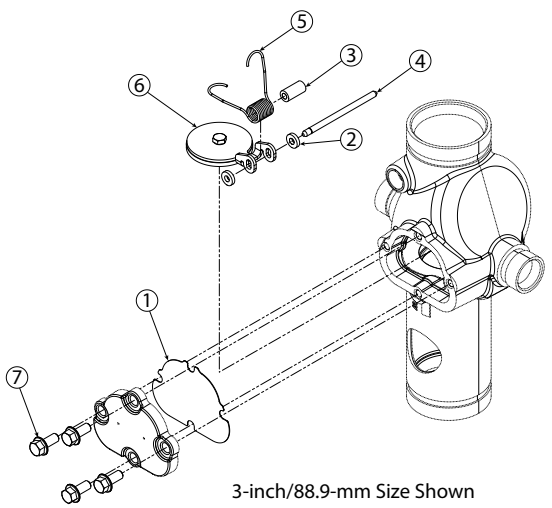

3-inch/88.9-mm Size Shown

Contents of Kit

Item	Description
1	Gasket
2	Clapper Spacers
3	Torsion Spring Spacer
4	Hinge Pin

Item	Description
5	Torsion Spring
6	Clapper Assembly
7	Hex Flange Screws

1. Notify the authority having jurisdiction, remote station alarm monitors, and those in the affected area before performing any maintenance that requires closing the control valve. Refer to warning on previous page.

2. Close the control valve.

3. Move the handle on the UTD to the "DRAIN" (full drain) position to fully drain the system.

4. For horizontal installations, after all pressure is released from the system, move the handle on the UTD to the "OFF" (normal operating position) or cover the drain port to prevent clapper assembly components from dropping into the drain piping. **NOTE:** The drain connection and/or mirrored port may also be removed for better access to all internal components.

5. Loosen the hex flange screws on the cover plate slowly. **NOTE:** DO NOT remove any hex flange screws until all are loosened.

6. Remove all hex flange screws, along with the cover plate and gasket.

7. Carefully grab the end of the hinge pin with pliers or a similar tool and pull it out from the body. **NOTE:** Support the clapper spacers, torsion spring, and torsion spring spacer while removing the hinge pin from the body. The torsion spring is under tension around hinge pin.

7a. If it is difficult to remove the hinge pin from the front of the body, remove the hinge pin plug from the back of the body. Use a hex key wrench or similar tool to push the hinge pin from the back of the body towards the front.

8. Carefully remove the old clapper assembly from the body.

9. Install the new kit components (Items 2 – 6), as shown in the drawing above. During replacement of the new clapper assembly, verify that the new torsion spring and new torsion spring spacer have been positioned properly around the new hinge pin so that the torsion spring applies tension to the clapper assembly. **Refer to the clapper spring orientation shown in the drawing above.**

10. If the hinge pin plug was removed in step 8, reinstall it into the back of the body.

11. Align the cover plate and new gasket to the body. Tighten the new hex flange screws into the cover plate/body in an even, crossing pattern to:

- 40 ft-lbs/54 N•m for 3-inch/88.9-mm and smaller sizes
- 80 ft-lbs/108 N•m for 4-inch/114.3-mm and larger sizes

DO NOT over-tighten the cover plate bolts.

12. If the drain connection or mirrored port was removed in step 4, reinstall it per the "Installation" section on page 4.

⚠CAUTION

- **DO NOT over-tighten the cover plate bolts.**

Failure to follow this instruction could cause damage to the cover plate gasket, resulting in valve leakage.

Series UMC Universal Manifold Check Assembly

(With or Without Control Valve)

REPLACEMENT KIT INSTRUCTIONS (CONTINUED)

Clapper Seal Replacement Kit for 6-inch/168.3-mm and Smaller Sizes

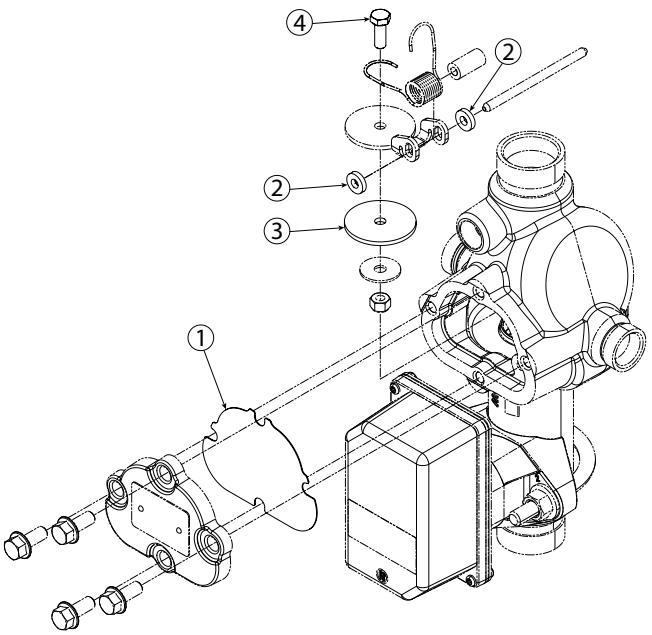

1½-inch/48.3-mm Size Shown

Contents of Kit

Item	Description
1	Gasket
2	Clapper Spacers

Item	Description
3	Clapper Facing
4	Self-Sealing Hex Cap Screw

1. Notify the authority having jurisdiction, remote station alarm monitors, and those in the affected area before performing any maintenance that requires closing the control valve. Refer to the warning on the previous page.

2. Close the control valve.

3. Move the handle on the UTD to the "DRAIN" (full drain) position to fully drain the system.

4. For horizontal installations, after all pressure is released from the system, move the handle on the UTD to the "OFF" (normal operating position) or cover the drain port to prevent clapper assembly components from dropping into the drain piping. **NOTE:** The drain connection and/or mirrored port may also be removed for better access to all internal components.

5. Loosen the hex flange screws on the cover plate slowly. **NOTE:** DO NOT remove any hex flange screws until all are loosened.

6. Remove all hex flange screws, along with the cover plate and gasket.

7. Carefully grab the end of the hinge pin with pliers or a similar tool and pull it out from the body. **NOTE:** Support the clapper spacers, torsion spring, and torsion spring spacer while removing the hinge pin from the body. The torsion spring is under tension around hinge pin.

7a. If it is difficult to remove the hinge pin from the front of the body, remove the hinge pin plug from the back of the body. Use a hex key wrench or similar tool to push the hinge pin from the back of the body towards the front.

8. Carefully remove the clapper assembly from the body. Discard the two existing clapper spacers.

9. Remove the lock nut, self-sealing hex cap screw, washer, and clapper facing from the current clapper. Keep the lock nut and washer for clapper reassembly. Discard the self-healing hex cap screw and clapper facing.

10. Install the new clapper facing, existing washer, new self-sealing hex cap screw, and existing lock nut onto the current clapper, as shown in the drawing above.

11. Install the rebuilt clapper assembly, as shown in the drawing above, with the two new clapper spacers. During replacement of the rebuilt clapper assembly, verify that the torsion spring and torsion spring spacer have been positioned properly around the hinge pin so that the torsion spring applies tension to the clapper assembly. **Refer to the clapper spring orientation shown in the drawing above.**

12. If the hinge pin plug was removed in step 8, reinstall it into the back of the body.

13. Align the cover plate and new gasket to the body. Tighten the new hex flange screws into the cover plate/body in an even, crossing pattern to:

- 40 ft-lbs/54 N•m for 3-inch/88.9-mm and smaller sizes
- 80 ft-lbs/108 N•m for 4-inch/114.3-mm and larger sizes

DO NOT over-tighten the cover plate bolts.

14. If the drain connection or mirrored port was removed in step 4, reinstall it per the "Installation" section on page 4.

⚠ CAUTION

- **DO NOT over-tighten the cover plate bolts.**

Failure to follow this instruction could cause damage to the cover plate gasket, resulting in valve leakage.

Check Valve Replacement Kit for the 8-inch/219.1-mm Size

Contact Victaulic regarding check valve replacement parts for the 8-inch/219.1-mm size of the UMC.

VICTAULIC AND FIRELOCK ARE REGISTERED TRADEMARKS OR TRADEMARKS OF VICTAULIC COMPANY AND/OR ITS AFFILIATED ENTITIES IN THE UNITED STATES AND/OR OTHER COUNTRIES. © 2022 VICTAULIC COMPANY. ALL RIGHTS RESERVED.

ANGLE VALVES 300LB. RATED

Fire Department Valves
FEMALE X MALE

STANDARD EQUIPMENT: Female NPT inlet and male hose thread outlet cast brass valve with wheel handle.

Figure No. 5010-5015

Fire Hose Rack Assembly Valves
DOUBLE FEMALE

STANDARD EQUIPMENT: Female NPT inlet and outlet cast brass valve with wheel handle

Figure No. 5020-5025

OPTIONAL FINISHES:
PB- Polished Brass
RC- Rough Chrome Plated
PC- Polished Chrome Plated

U/L LISTED
NY BSA/MEA APPROVED

SPECIFY THREAD

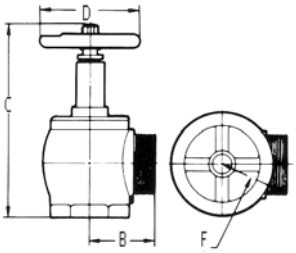

Figure No.	5010 5020	5015 5025
Size	1 1/2"	2 1/2"
A	2 11/64	3 3/16
B	2 7/32	3 3/16
C-Closed	6 5/8	9 1/4
C-Open	7 21/22	11
D	3 3/4	5
E	2 7/16	3 19/32
F	2 13/16	3 19/32
U/L Listed	Yes	Yes
FM Approved	Yes	Yes
NYC Approved	Yes	Yes
2 13/16	3 19/32	

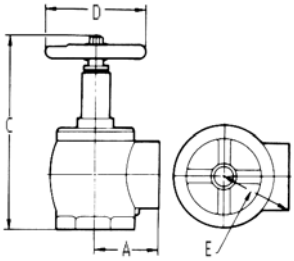

ANGLE VALVES 300LB. RATED

Fire Department Valves
FEMALE X MALE

STANDARD EQUIPMENT: Female NPT inlet and male hose thread outlet cast brass valve with wheel handle.

Figure No. 5030-5035

Fire Hose Rack Assembly Valves
DOUBLE FEMALE

STANDARD EQUIPMENT: Female NPT inlet and outlet cast brass valve with wheel handle

Figure No. 5040-5045

OPTIONAL FINISHES:
PB- Polished Brass
RC- Rough Chrome Plated
PC- Polished Chrome Plated

U/L LISTED
NY BSA/MEA APPROVED

SPECIFY THREAD

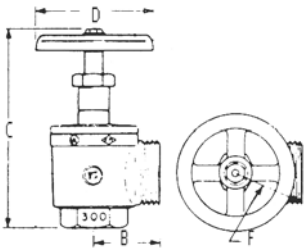

Figure No.	5030 5040	5035 5045
Size	1 1/2"	2 1/2"
A	2 9/64	3 5/32
B	2 17/64	3 3/16
C-Closed	6 1/2	8 3/4
C-Open	7 11/16	10 9/16
D	4 1/64	5 1/8
E	2 7/10	3 1/2
F	2 3/8	3 3/8
U/L Listed	Yes	Yes

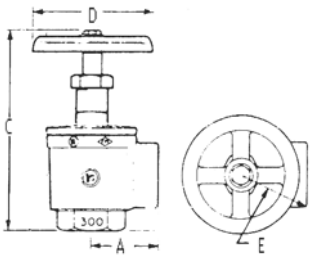

CROKER DIVISION
FIRE-END & CROKER CORPORATION
7 WESTCHESTER PLAZA
ELMSFORD, NY 10523

May 12, 2020

Croker Product Warranty Policy

All products sold by Fire-End & Croker Corporation are guaranteed under intended and normal use for a period of one year from the date of shipment.

This warranty applies to products deemed inoperable or unusable due to defects in the original material or quality and is limited to the original buyer only. Any field modifications made by the purchaser may negate this warranty. This warranty does not cover or apply to any personal injury, labor charges, or apply to products that have been damaged in transit, subject to abuse, neglect, accident or improper installation.

Fire-End & Croker Corp. will replace at no charge, any defective item received in our warehouse and shipped at the purchaser's expense, and which is received within the covered warranty period. All products considered for warranty claims require a return authorization before being returned and are subject to inspection. All warranty claims require final approval pending material return and inspection.

Fire–End & Croker Corp.

POTTER
The Symbol of Protection

BELLS

PBA-AC & PDC-DC

Features

- Listed for indoor and outdoor use
- Outdoor use requires BBK-1 or HC-BB weatherproof back box
- Indoor use mounts directly to standard 4” box
- Low current draw
- High dB output
- AC and DC models
- DC models are motor driven, polarized, and have built in transient protection for supervised alarm circuits
- Available in 6”, 8” and 10” sizes

FM APPROVED

* ULC on PDC-DC Only
** FM on PBA-AC Only

Description

These vibrating type bells are designed for use as fire or general signaling devices. They have low power consumption and high decibel ratings. The unit mounts on a standard 4” (101mm) square electrical box for indoor use or on a model BBK-1 or HC-BB weatherproof backbox for outdoor applications. Weatherproof backbox model BBK-1 or HC-BB, Stock No. 1500001.

Notes

1. Minimum dB ratings are calculated from integrated sound pressure measurements made at Underwriters Laboratories as specified in UL Standard 464. UL temperature range is -30° to 150°F (-34° to 66°C)
2. Typical dB ratings are calculated from measurements made with a conventional sound level meter and are indicative of output levels in an actual installation.
3. ULC only applies to PDC-DC bells.

Size inches (mm)	Voltage	Model Number	Stock Number	Current (Max.)	Typical dB at 10 ft. (3m) (2)	Minimum dB at 10 ft. (3m) (1)
6 (150)	12VDC	PDC-6-12	1750500	200mA	96	76
8 (200)	12VDC	PDC-8-12	1750502	.200mA	96	77
10 (250)	12VDC	PDC-10-12	1750504	.200mA	96	78
6 (150)	24VDC	PDC-6-24	1750501	.20mA	95	77
8 (200)	24VDC	PDC-8-24	1750503	20mA	83	79
10 (250)	24VDC	PDC-10-24	1750505	20mA	85	80
6 (150)	24VAC	PBA246	1806024*	.17A	91	78
8 (200)	24VAC	PBA248	1808024*	.17A	94	77
10 (250)	24VAC	PBA2410	1810024*	.17A	94	78
6 (150)	120VAC	PBA1206	1806120*	.05A	92	83
8 (200)	120VAC	PBA1208	1808120*	.05A	99	84
10 (250)	120VAC	PBA12010	1810120*	.05A	99	86

All DC bells are polarized and have built-in transient protection. * Does not have ULC listing.

Technical Specifications

Dimensions	6” (150mm), 8” (200mm) and 10” (250mm)
Enclosure	Cover: Steel Finish: Red Powder Coat Base: non-corrosive composite material All parts have corrosion resistant finishes Model BBK-1 or HC-BB weatherproof backbox (optional)
Voltages Available	24VAC 120VAC 12VDC (10.2 to 15.6) Polarized 24VDC (20.4 to 31.2) Polarized
Environmental Limitations	Indoor or outdoor use (See Note 1) -40° to 150°F (-40° to 66°C) (Outdoor use requires weatherproof backbox.)
Termination	AC Bells - 4 No. 18 AWG stranded wires DC Bells - 18 AWG stranded wire
Service Use	NFPA 13, 72, local AHJ

*Specifications subject to change without notice.

WARNING

- Installation must be performed by qualified personnel and in accordance with all national and local codes and ordinances.
- Shock hazard. Disconnect power source before servicing. Serious injury or death could result.
- Risk of explosion. Not for use in hazardous locations. Serious injury or death could result.

WARNING

In outdoor or wet installations, bell must be mounted with weatherproof backbox, BBK-1 or HC-BB. Standard electrical boxes will not provide a weatherproof enclosure. If the bell and/or assembly is exposed to moisture, it may fail or create an electrical hazard.

Installation

The bell shall be installed in accordance with NFPA 13, 72, or local AHJ. The top of the device shall be no less than 90" AFF and not less than 6" below the ceiling.

1. Remove the gong.
2. Connect wiring (see Fig. 3).
3. Mount bell mechanism to backbox (bell mechanism must be mounted with the striker pointing down).
4. Reinstall the gong (be sure that the gong positioning pin, in the mechanism housing, is in the hole in the gong).
5. Test all bells for proper operation and observe that they can be heard where required (bells must be heard in all areas as designated by the authority having jurisdiction).

⚠ WARNING

Failure to install striker down will prevent bell from ringing.

Bell Dimension Inches (mm)

Fig 1

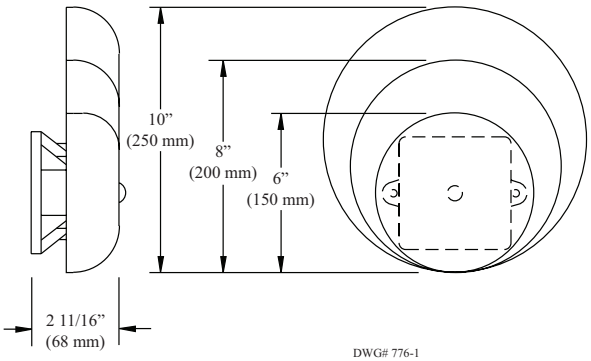

Weatherproof Backbox Dimensions Inches (mm)

MODEL BBK-1 OR HC-BB

Fig 2

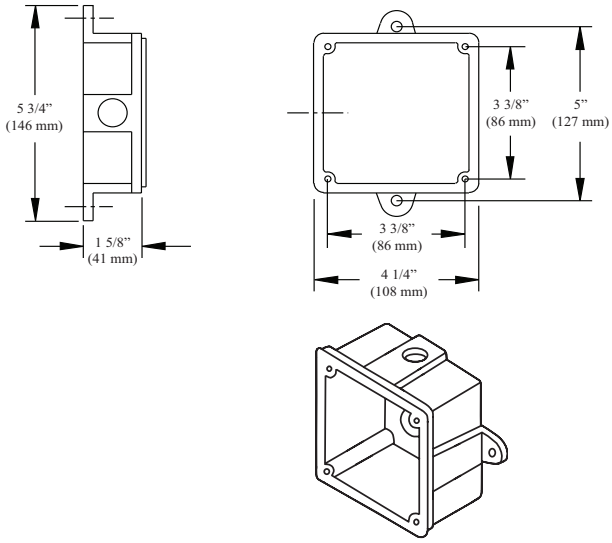

Wiring Rear View

Fig 3

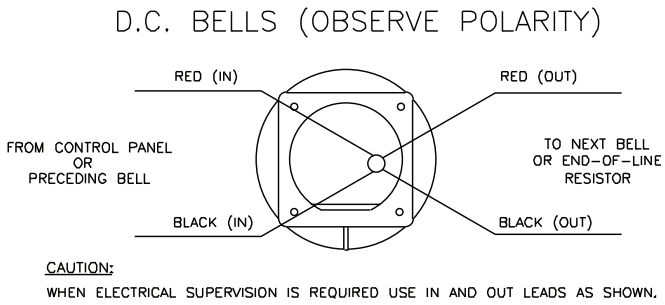

NOTES:

1. OBSERVE POLARITY TO RING D.C. BELLS.
2. RED WIRES POSITIVE (+).
3. BLACK WIRES NEGATIVE (-).
4. EOL RESISTOR IS SUPPLIED BY FIRE ALARM CONTROL PANEL.

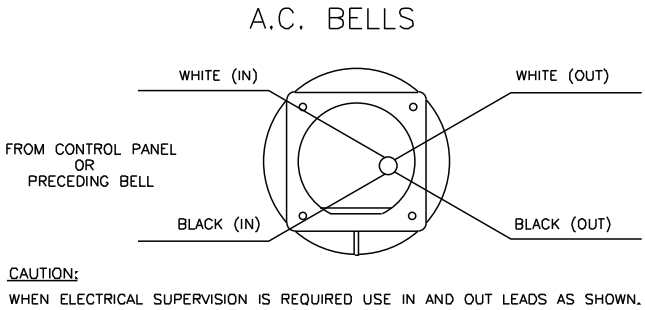

NOTES:

1. WHEN USING A.C. BELLS, TERMINATE EACH EXTRA WIRE SEPERATELY AFTER LAST BELL.
2. END-OF-LINE RESISTOR IS NOT REQUIRED ON AC BELLS .

Warranty Information

The essential purpose of any sale or contract for sale of any of the products listed in the POTTER catalog or price list is the furnishing of that product. It is expressly understood that in furnishing said product, POTTER does not agree to insure the Purchaser against any losses the Purchaser may incur, even if resulting from the malfunction of said product.

POTTER warrants that the equipment herein shall conform to said descriptions as to all affirmation of fact and shall be free from defects of manufacture, labeling, and packaging for a period of one (1), three (3), or five (5) year(s), depending on the product, from the invoice date to the original purchaser, provided that representative samples are returned to POTTER for inspection. The product warranty period is stated on the exterior of the product package. Upon a determination by POTTER that a product is not as warranted, POTTER shall, at its exclusive option, replace or repair said defective product or parts thereof at its own expense except that Purchaser shall pay all shipping, insurance, and similar charges incurred in connection with the replacement of the defective product or parts thereof. This Warranty is void in the case of abuse, misuse, abnormal usage, faulty installation, or repair by unauthorized persons, or if for any other reason POTTER determines that said product is not operating properly as a result of causes other than defective manufacture, labeling, or packaging.

The Aforesaid Warranty Is Expressly Made In Lieu Of Any Other Warranties, Expressed Or Implied, It Being Understood That All Such Other Warranties, Expressed Or Implied, Including The Warranties Of Merchantability And Fitness For Particular Purpose Are Hereby Expressly Excluded. In No Event Shall Potter Be Liable To Purchaser For Any Direct, Collateral, Incidental, Or Consequential Damages In Connection With Purchaser's Use Of Any Of The Products Listed Herein, Or For Any Other Cause Whatsoever Relating To The Said Products. Neither Potter Nor Its Representatives Shall Be Liable To The Purchaser Or Anyone Else For Any Liability, Claim, Loss, Damage, Or Expense Of Any Kind, Or Direct Collateral, Incidental, Or Consequential Damages Relative To Or Arising From Or Caused Directly Or Indirectly By Said Products Or The Use Thereof Or Any Deficiency, Defect, Or Inadequacy Of The Said Products. It Is Expressly Agreed That Purchaser's Exclusive Remedy For Any Cause Of Action Relating To The Purchase And/or Use Of Any Of The Products Listed Herein From Potter Shall Be For Damages, And Potter's Liability For Any And All Losses Or Damages Resulting From Any Cause Whatsoever, Including Negligence, Or Other Fault, Shall In No Event Exceed The Purchase Price Of The Product In Respect To Which The Claim Is Made, Or At The Election Of Potter, The Restoration Or Replacement Or Repair Of Such Product.

Victaulic® FireLock™ Fittings

1.0 PRODUCT DESCRIPTION

Available Sizes

- 1 ¼ – 8"/DN32 – DN200

Maximum Working Pressure

- Pressure ratings for Victaulic FireLock™ Fittings conform to the ratings of Victaulic FireLock EZ™ Style 009N couplings (refer to publication 10.64 for more information).

Application

- FireLock™ fittings are designed for use exclusively with Victaulic couplings that have been Listed or Approved for Fire Protection Services. Use of other couplings or flange adapters may result in bolt pad interference.
- Connects pipe, provides change in direction and adapts sizes or components

Pipe Materials

- Carbon steel

2.0 CERTIFICATION/LISTINGS

EN 10311
Regulation (EU)
No. 305/2011

3.0 SPECIFICATIONS – MATERIAL

Fitting: Ductile iron conforming to ASTM A536, Grade 65-45-12.

Fitting Coating: (specify choice)

- ☐ Orange coating.
- ☐ Red coating (standard for EMEA-I and Asia Pacific).
- ☐ Optional: Hot dipped galvanized.

ALWAYS REFER TO ANY NOTIFICATIONS AT THE END OF THIS DOCUMENT REGARDING PRODUCT INSTALLATION, MAINTENANCE OR SUPPORT.

 © 2021 Victaulic Company. All rights reserved.

4.0 DIMENSIONS

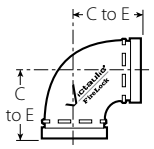

No. 001

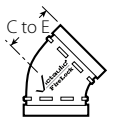

No. 003

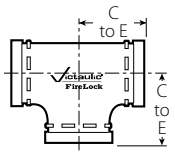

No. 002

No. 006

Nominal Size inches DN	Actual Outside Diameter inches mm	No. 001 90° Elbow C to E inches mm	No. 001 90° Elbow Approximate Weight Each lb kg	No. 003 45° Elbow C to E inches mm	No. 003 45° Elbow Approximate Weight Each lb kg	No. 002 Straight Tee C to E inches mm	No. 002 Straight Tee Approximate Weight Each lb kg	No. 006 Cap T inches mm	No. 006 Cap Approximate Weight Each lb kg
1 ¼ DN32	1.660 42.4	— —	— —	— —	— —	— —	— —	0.82 21	0.3 0.1
1 ½ DN40	1.900 48.3	— —	— —	— —	— —	— —	— —	0.82 21	0.4 0.2
2 DN50	2.375 60.3	2.75 70	1.7 0.8	2.00 51	1.8 0.8	2.75 70	2.4 1.1	0.88 22	0.6 0.3
2 ½	2.875 73.0	3.00 76	3.1 1.4	2.25 57	2.2 1.0	3.00 76	3.6 1.6	0.88 22	1.0 0.5
DN65	3.000 76.1	3.00 76	3.30 1.5	2.25 57	2.4 1.1	3.00 76	3.8 1.7	—	—
3 DN80	3.500 88.9	3.38 86	4.0 1.8	2.50 64	3.1 1.4	3.38 86	5.3 2.4	0.88 22	1.2 0.5
	4.250 108.0	4.00 102	5.7 2.6	3.00 76	5.1 2.3	4.00 102	7.5 3.4	—	—
4 DN100	4.500 114.3	4.00 102	6.7 3.0	3.00 76	5.6 2.5	4.00 102	8.7 3.9	1.00 25	2.4 1.1
5	5.563 141.3	4.88 124	12.6 5.7	3.25 83	8.3 3.8	4.88 124	15.7 7.1	1.00 25	4.1 1.9
DN125	5.500 139.7	4.88 124	12.4 5.6	3.25 82.6	8.2 3.7	4.88 124	15.4 6.9	—	—
	6.250 158.8	5.50 140	12.6 5.7	3.50 89	9.2 4.2	5.50 140	17.9 8.0	—	—
6 DN150	6.625 168.3	5.50 140	18.3 8.3	3.50 89	11.7 5.3	5.50 140	22.7 10.3	1.00 25	5.9 2.7
	6.500 165.1	5.43 140	17.6 7.9	3.50 89	11.4 5.2	5.50 140	22.0 9.9	—	—
8 DN200	8.625 219.1	6.81 173	25.5 11.6	4.25 108	20.4 9.3	6.94 176	38.7 17.6	1.13 29	12.7 5.8
	8.515 216.3	6.81 173	23.1 10.5	— —	— —	6.94 176	33.6 15.2	— —	— —

 © 2021 Victaulic Company. All rights reserved.

5.0 PERFORMANCE

Flow Data

Size		Frictional Resistance Equivalent of Straight Pipe[1]			
		Elbows		No. 002 Straight Tee	
Nominal Size inches DN	Actual Outside Diameter inches mm	No. 001 90° Elbow feet meters	No. 003 45° Elbow feet meters	Branch feet meters	Run feet meters
1 ¼ DN32	1.660 42.4	— —	— —	— —	— —
1 ½ DN40	1.900 48.3	— —	— —	— —	— —
2 DN50	2.375 60.3	3.5 1.1	1.8 0.5	8.5 2.6	3.5 1.1
2 ½	2.875 73.0	4.3 1.3	2.2 0.7	10.8 3.3	4.3 1.3
DN65	3.000 76.1	4.5 1.4	2.3 0.7	11.0 3.4	4.5 1.4
3 DN80	3.500 88.9	5.0 1.5	2.6 0.8	13.0 4.0	5.0 1.5
	4.250 108.0	6.4 2.0	3.2 0.9	15.3 4.7	6.4 2.0
4 DN100	4.500 114.3	6.8 2.1	3.4 1.0	16.0 4.9	6.8 2.1
5	5.563 141.3	8.5 2.6	4.2 1.3	21.0 6.4	8.5 2.6
DN125	5.500 139.7	8.3 2.5	4.1 1.3	20.6 6.3	8.3 2.5
	6.250 158.8	9.4 2.9	4.9 1.5	25.0 7.6	9.6 2.9
6 DN150	6.625 168.3	10.0 3.0	5.0 1.5	25.0 7.6	10.0 3.0
	6.500 165.1	9.8 3.0	4.9 1.5	24.5 7.5	9.8 3.0
8 DN200	8.625 219.1	13.0 4.0	5.0 1.5	33.0 10.1	13.0 4.0
	8.515 216.3	13.0 4.0	— —	33.0 10.1	13.0 4.0

[1] The flow data listed is based upon the pressure drop of Schedule 40 pipe.

 © 2021 Victaulic Company. All rights reserved.

6.0 NOTIFICATIONS

General Notes

NOTE: When assembling FireLock EZ™ couplings onto end caps, take additional care to make certain the end cap is fully seated against the gasket end stop. For FireLock EZ™ Style 009N/009H couplings, use FireLock™ No. 006 end caps containing the "EZ" marking on the inside face or No. 60 end caps containing the "QV EZ" marking on the inside face. Non-Victaulic end cap products shall not be used with Style 009/009V/009H/009N couplings.

7.0 REFERENCE MATERIALS

10.64: Victaulic® FireLock™ Rigid Coupling Style 009N

10.02: Victaulic® FireLock™ Rigid Coupling Style 005H with Vic-Plus™ Gasket System

29.01: Victaulic® Terms and Conditions of Sale

User Responsibility for Product Selection and Suitability
Each user bears final responsibility for making a determination as to the suitability of Victaulic products for a particular end-use application, in accordance with industry standards and project specifications, and the applicable building codes and related regulations as well as Victaulic performance, maintenance, safety, and warning instructions. Nothing in this or any other document, nor any verbal recommendation, advice, or opinion from any Victaulic employee, shall be deemed to alter, vary, supersede, or waive any provision of Victaulic Company's standard conditions of sale, installation guide, or this disclaimer.

Intellectual Property Rights
No statement contained herein concerning a possible or suggested use of any material, product, service, or design is intended, or should be constructed, to grant any license under any patent or other intellectual property right of Victaulic or any of its subsidiaries or affiliates covering such use or design, or as a recommendation for the use of such material, product, service, or design in the infringement of any patent or other intellectual property right. The terms "Patented" or "Patent Pending" refer to design or utility patents or patent applications for articles and/or methods of use in the United States and/or other countries.

Note
This product shall be manufactured by Victaulic or to Victaulic specifications. All products to be installed in accordance with current Victaulic installation/assembly instructions. Victaulic reserves the right to change product specifications, designs and standard equipment without notice and without incurring obligations.

Installation
Reference should always be made to the Victaulic installation handbook or installation instructions of the product you are installing. Handbooks are included with each shipment of Victaulic products, providing complete installation and assembly data, and are available in PDF format on our website at www.victaulic.com.

Warranty
Refer to the Warranty section of the current Price List or contact Victaulic for details.

Trademarks
Victaulic and all other Victaulic marks are the trademarks or registered trademarks of Victaulic Company, and/or its affiliated entities, in the U.S. and/or other countries.

 © 2021 Victaulic Company. All rights reserved.

Victaulic® FireLock™ Rigid Coupling
Style 005H

Patented

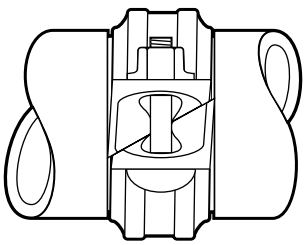

Exaggerated for clarity

1.0 PRODUCT DESCRIPTION

Available Sizes

- 1 ¼ – 8"/DN32 – DN200

Maximum Working Pressure

- Up to 350 psi/2413 kPa

Function

- Joins carbon steel pipe with grooved ends conforming to publication 25.01
- This product is designed for fire protection systems only

Pipe Material

- Schedule 10, Schedule 40 or specialty carbon steel pipe listed in Section 5. For use with alternative materials and wall thicknesses please contact Victaulic
- For exceptions reference section 6.0 Notifications

2.0 CERTIFICATION/LISTINGS

104-1a/02

ALWAYS REFER TO ANY NOTIFICATIONS AT THE END OF THIS DOCUMENT REGARDING PRODUCT INSTALLATION, MAINTENANCE OR SUPPORT.

 © 2022 Victaulic Company. All rights reserved.

3.0 SPECIFICATIONS – MATERIAL

Housing: Ductile iron conforming to ASTM A-536, grade 65-45-12. Ductile iron conforming to ASTM A-395, grade 65-45-15, is available upon special request.

Housing Coating: (specify choice)

- ☐ Orange coating.
- ☐ Red coating (standard for EMEA-I and Asia Pacific).
- ☐ Optional: Hot dipped galvanized.

Coupling Gasket (specify choice):

- ☐ Grade "E" EPDM Type A Vic-Plus™ Gasket System[1]

  EPDM (Violet color code). FireLock products have been Listed by Underwriters Laboratories Inc. and Approved by Factory Mutual Research for wet and dry (oil free air) sprinkler services up to the rated working pressure using the Grade "E" Type A Vic-Plus™ Gasket System, requiring no field lubrication for most installation conditions.

- ☐ Grade "L" silicone

  Recommended for dry heat, air without hydrocarbons to +350°F and certain chemical service.

  For dry services, Victaulic continues to recommend the use of Grade "E" Type A FlushSeal® Gasket. Contact Victaulic for details.

[1] Standard gasket and FlushSeal gasket approved for dry pipe systems to –40°F/–40°C. Based on "typical" pipe surface conditions, supplemental lubricant is recommended for services installed below 0°F/–18°C and for all dry pipe systems or systems to be subjected to air tests prior to being filled with water. Supplemental lubrication may also be required on pipe with raised or undercut weld seams or pipe that has voids and/or cracks at the weld seams. Victaulic continues to recommend the use of FlushSeal gaskets for dry services.

NOTE

- Additional gasket styles are available. Contact Victaulic for details.

Bolts/Nuts: Carbon steel oval neck track bolt(s) meeting the mechanical property requirements of ASTM A449 (imperial) and ISO 898-1 Class 9.8 (M10-M16) Class 8.8 (M20 and greater). Carbon steel hex nuts meeting the mechanical property requirements of ASTM A563 Grade B (imperial) and ASTM A563M Class 9 (metric). Track bolts and hex nuts are zinc electroplated per ASTM B633 Fe/Zn 5, finish Type III (imperial) or Type II (metric).

 © 2022 Victaulic Company. All rights reserved.

4.0 DIMENSIONS

Style 005H

Rated for wet and dry sprinkler systems at 350 psi/2413 kPa for 1 ¼ – 4"/32 – 100 mm sizes and 300 psi /2068 kPa for 4 ¼ – 8"/108 – 200 mm sizes; Schedule 10 roll grooved or Schedule 40 cut or roll grooved steel pipe. Style 005H is rigid and does not accommodate expansion, contraction or angular deflection.

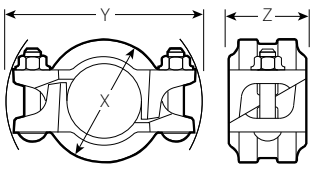

Style 005H

Size						Dimensions			
Nominal inches mm	**Actual Outside Diameter** inches mm	**Maximum Working Pressure**[1 4] psi kPa	**Maximum End Load**[1] lbs N	**Allow. Pipe End Separation**[2] inches mm	**Bolt/Nut**[3] No –size inches	**X** inches mm	**Y** inches mm	**Z** inches mm	**Approx. Weight Each** lbs kg
1 ¼ 32	1.660 42.4	350 2413	755 3370	0.05 1.2	2 – ⅜ × 2 ¼	2.75 70	4.50 114	1.88 48	1.2 0.5
1 ½ 40	1.900 48.3	350 2413	990 4415	0.05 1.2	2 – ⅜ × 2 ¼	3.00 76	4.75 121	1.88 48	1.2 0.5
2 50	2.375 60.3	350 2413	1550 6900	0.07 1.7	2 – ⅜ × 2 ½	3.50 89	5.25 133	1.88 48	1.6 0.7
2 ½ 65	2.875 73.0	350 2413	2270 10110	0.07 1.7	2 – ⅜ × 2 ½	4.00 102	5.75 146	1.88 48	1.9 .09
76.1 mm	3.000 76.1	350 2413	2475 11010	0.07 1.7	2 – ⅜ × 2 ½	4.13 105	5.75 146	1.88 48	1.9 0.9
3 80	3.500 88.9	350 2413	3365 14985	0.07 1.7	2 – ⅜ × 2 ½	4.63 118	6.13 156	1.88 48	2.1 1.0
4 100	4.500 114.3	350 2413	5565 24770	0.16 4.1	2 – ⅜ × 2 ½	5.75 146	7.25 184	2.13 54	3.1 1.4
108.0 mm	4.250 108.0	300 2068	4255 18940	0.16 4.1	2 – ⅜ × 2 ½	5.63 143	7.25 184	2.13 54	3.1 1.4
5 125	5.563 141.3	300 2068	7290 32445	0.16 4.1	2 – ½ × 3	6.88 175	9.00 229	2.13 54	4.5 2.0
133.0 mm	5.250 133.0	300 2068	6495 28900	0.16 4.1	2 – ½ × 2 ¾	6.63 168	9.00 229	2.13 54	4.5 2.0
139.7 mm	5.500 139.7	300 2068	7125 31715	0.16 4.1	2 – ½ × 2 ¾	6.88 175	9.00 229	2.13 54	4.8 2.2
6 150	6.625 168.3	300 2068	10340 46020	0.16 4.1	2 – ½ × 3	8.00 203	10.00 254	2.13 53	5.0 2.3
159.0 mm	6.250 159.0	300 2068	9200 40955	0.16 4.1	2 – ½ × 2 ¾	7.63 194	10.00 254	2.13 54	5.5 2.5
165.1 mm	6.500 165.1	300 2068	9955 44295	0.16 4.1	2 – ½ × 3	8.15 207	10.00 254	2.13 54	5.5 2.5
8 200	8.625 219.1	300 2068	17525 78000	0.19 4.8	2 – ⅝ × 4 ¼	10.50 267	13.14 334	2.63 67	11.3 5.1

1 Working Pressure and End Load are total, from all internal and external loads, based on standard weight (ANSI) steel pipe, standard roll or cut grooved in accordance with Victaulic specifications. Contact Victaulic for performance on other pipe. WARNING: FOR ONE TIME FIELD TEST ONLY, the Maximum Joint Working Pressure may be increased to 1½ times the figures shown.

2 The allowable pipe separation dimension shown is for system layout purposes only. Style 005H couplings are considered rigid connections and will not accommodate expansion or contraction of the piping system.

3 Number of bolts required equals number of housing segments. Metric thread size bolts are available (color coded gold) for all coupling sizes upon request. Contact Victaulic for details.

4 Style 005H couplings are VdS and LPC Approved to 16 Bar/235 psi.

 © 2022 Victaulic Company. All rights reserved.

5.0 PERFORMANCE

Style 005H

The information provided below is based on the latest listing and approval data at the time of publication. Listings/ Approvals are subject to change and/or additions by the approvals agencies.

Contact Victaulic for performance on other pipe and the latest listings and approvals.

Related Working Pressure psi					Related Working Pressure psi					Related Working Pressure psi				
Pipe Sch.	Size inches	UL	ULC	FM	Pipe Sch.	Size inches	UL	ULC	FM	Pipe Sch.	Size inches	UL	ULC	FM
5	1¼ – 3	175	175	175	EL	1¼ – 2	300	N/A	N/A	MT	1¼ – 2	300	N/A	N/A
10, 40	1¼ – 3	350	350	350	ET	1¼ – 2	300	N/A	N/A	STF	1¼ – 4	N/A	N/A	300
	5 – 8	300	300	300	EZ	4 – 6	300[6]	N/A	300	Steady Thd.	1¼ – 2	N/A	N/A	300
BLT	1¼ – 2	300	300	N/A	FF	1¼ – 4	N/A	N/A	300	TF	3 – 8	N/A	N/A	300
DF	1¼ – 4	300	300	300	GAL -7	1¼ – 2	300	N/A	N/A	WLS	1¼ – 2	300	300	N/A
DT	1¼ – 2	300	300	N/A	MLT	1¼ – 2	300	N/A	N/A	XL	1¼ – 3	300	300	300
EF	1¼ – 4	175[7]	N/A	175	MF	1¼ – 4	300	N/A	300[5]					

[5] FM approved for service in 1 ½ – 4" pipe.

[6] UL Listed for service up to 4" pipe only.

[7] UL Listed for service up to 3" only.

 © 2022 Victaulic Company. All rights reserved.

6.0 NOTIFICATIONS

WARNING

- **Read and understand all instructions before attempting to install any Victaulic products.**
- **Always verify that the piping system has been completely depressurized and drained immediately prior to installation, removal, adjustment, or maintenance of any Victaulic products.**
- **Wear safety glasses, hardhat, and foot protection.**

Failure to follow these instructions could result in death or serious personal injury and property damage.

- **These products shall be used only in fire protection systems that are designed and installed in accordance with current, applicable National Fire Protection Association (NFPA 13, 13D, 13R, etc.) standards, or equivalent standards, and in accordance with applicable building and fire codes. These standards and codes contain important information regarding protection of systems from freezing temperatures, corrosion, mechanical damage, etc.**
- **The installer shall understand the use of this product and why it was specified for the particular application.**
- **The installer shall understand common industry safety standards and potential consequences of improper product installation.**
- **It is the system designer's responsibility to verify suitability of materials for use with the intended fluid media within the piping system and external environment.**
- **The material specifier shall evaluate the effect of chemical composition, pH level, operating temperature, chloride level, oxygen level, and flow rate on materials to confirm system life will be acceptable for the intended service.**

Failure to follow installation requirements and local and national codes and standards could compromise system integrity or cause system failure, resulting in death or serious personal injury and property damage.

NOTICE

- **Victaulic does not recommend the use of any furnace butt-welded pipe with sizes 2"/DN50 and smaller Victaulic gasketed joint products. This includes, but is not limited to, ASTM A53 Type F pipe.**

7.0 REFERENCE MATERIALS

10.01 Victaulic Products for Fire Protection Piping Systems – Regulatory Approval Reference Guide

I-100 Victaulic Field Installation Handbook

User Responsibility for Product Selection and Suitability
Each user bears final responsibility for making a determination as to the suitability of Victaulic products for a particular end-use application, in accordance with industry standards and project specifications, and the applicable building codes and related regulations as well as Victaulic performance, maintenance, safety, and warning instructions. Nothing in this or any other document, nor any verbal recommendation, advice, or opinion from any Victaulic employee, shall be deemed to alter, vary, supersede, or waive any provision of Victaulic Company's standard conditions of sale, installation guide, or this disclaimer.

Intellectual Property Rights
No statement contained herein concerning a possible or suggested use of any material, product, service, or design is intended, or should be constructed, to grant any license under any patent or other intellectual property right of Victaulic or any of its subsidiaries or affiliates covering such use or design, or as a recommendation for the use of such material, product, service, or design in the infringement of any patent or other intellectual property right. The terms "Patented" or "Patent Pending" refer to design or utility patents or patent applications for articles and/or methods of use in the United States and/or other countries.

Note
This product shall be manufactured by Victaulic or to Victaulic specifications. All products to be installed in accordance with current Victaulic installation/assembly instructions. Victaulic reserves the right to change product specifications, designs and standard equipment without notice and without incurring obligations.

Installation
Reference should always be made to the Victaulic installation handbook or installation instructions of the product you are installing. Handbooks are included with each shipment of Victaulic products, providing complete installation and assembly data, and are available in PDF format on WeChat.

Warranty
Refer to the Warranty section of the current Price List or contact Victaulic for details.

Trademarks
Victaulic and all other Victaulic marks are the trademarks or registered trademarks of Victaulic Company, and/or its affiliated entities, in the U.S. and/or other countries.

 © 2022 Victaulic Company. All rights reserved.

1.0 TERMS AND CONDITIONS OF SALE

CONTROLLING PROVISIONS: These terms and conditions shall control with respect to any purchase order or sale of Victaulic products.

No alteration, modification or waiver of these terms and conditions whether on Customer's purchase order or otherwise shall be valid unless the alteration, modification or waiver is specifically accepted in writing by an authorized representative of Victaulic.

Prices, Designs and Terms and Conditions of Sale are subject to change without notice.

TERMS OF PAYMENT: As stated on invoice. Maximum legal interest rate charged thereafter.

MINIMUM INVOICE CHARGES: $500 net for any single order.

SHIPPING TERMS: F.O.B. shipping point (our option) freight prepaid and allowed on single orders (excluding No. 26/No. W26 Outlet Fittings, No. 826 Steam Outlet Fittings, Series 387 Inline/Series 388 End Suction Pump Skids, Customer Specified Flat Beds, Style W257 Dynamic Movement Joints, Bend Elbows – 3D/5D/6D, Victaulic Bolted Split-Sleeve Products and Victaulic Vortex™ Products) having a net price value of $15000 and over for shipment at one time to one destination into distributor stock or direct ship to a project, as determined by Victaulic within the continental United States, excluding Alaska, Hawaii, Puerto Rico and U.S. possessions.

Shipping and handling charges on orders less than net price value of $15000, F.O.B. shipping point (our option) will be paid by the customer. The most economical routing to recognized delivery points will be used, at our discretion. The cost of any special routing, packaging or handling that has been requested by the customer, and is a deviation to our normal handling methods, will be added to the order and paid by the customer.

Shipments beyond the borders of the United States are prepaid and chargeable or collectable to final destination.

Orders are accepted subject to approval of our General Office and Credit Department at Easton, Pennsylvania, and contingent upon **acts of God, war, civil disturbance, strikes, labor difficulties, delays of carriers, inability to obtain materials, accidents or any other cause beyond our control.**

Victaulic will endeavor to ship by the requested ship date, but reserves the right to ship within a reasonable period thereafter. **Under no circumstances shall Victaulic be liable for damages of any kind, including but not limited to incidental or consequential damages for lost profits or lost sales or liquidated damages, directly or indirectly arising from delays or failure to meet shipping dates.**

Orders, when accepted, cannot be cancelled without our written consent. No material will be taken back without our written consent. **Orders for non-standard (i.e. non-cancellable/non-returnable) material may not be cancelled nor will Victaulic accept return of such material for credit. Victaulic reserves the right to change the designation of products from standard to non-standard and vice versa. This may be done at any time without notice, and without incurring obligation. For further information contact Victaulic.**

All material is carefully examined, counted and packed by experienced employees. Claims for corrections must be made within 10 days of receipt of goods to the Customer Care center in Easton, PA (1-800-PICK VIC). We prove our count by weight. Claims for shortages are subject to that test. Our responsibility ceases when goods are delivered to carrier in good condition and its receipt obtained. Carriers are responsible for goods lost, damaged or delayed in transit. For your own protection, have transportation company's agent verify damages, shortages or delays and note them on freight bill over his signature.

WEIGHTS: All weights are approximate shipping weights and subject to change without notice.

Victaulic maintains a continual policy of product improvement and, therefore, reserves the right to change product specifications, designs, and standard equipment without notice and without incurring obligation.

2.0 LIMITED WARRANTY

What is Covered: This warranty covers any defects in materials or workmanship in products sold by Victaulic occurring under normal conditions of use and service with the exceptions stated below.

How Long Coverage Lasts: This warranty runs for one year from the date of delivery to the original buyer.

What is Not Covered: This warranty shall not apply to any product which has been subject to misuse, negligence, or accident (such as, without limitation, exposure to incompatible chemical or corrosive agents including microbial corrosion), which has been repaired or altered in any manner outside of Victaulic's factory, or which has been used in a manner contrary to Victaulic's instructions or recommendations. This warranty shall not apply to any Victaulic products utilizing proprietary grooves (such as, but not limited to, the Victaulic AGS™, IGS™, or PGS-300™ grooves) which have been used on pipe that has been grooved to ANSI/AWWA C-606 standards or which was grooved using tools not supplied by Victaulic or its licensees. Victaulic shall not be responsible for design errors due to inaccurate or incomplete information supplied by Buyer or its representatives.

What Victaulic will do: Victaulic will repair or replace, at its option, any product that proves to be defective in materials or workmanship following an examination by Victaulic that shows to its satisfaction the product was defective in materials or workmanship.

THIS LIMITED WARRANTY IS EXCLUSIVE AND MADE EXPRESSLY IN LIEU OF ANY OTHER WARRANTIES, EXPRESS OR IMPLIED, INCLUDING ANY IMPLIED WARRANTY OF MERCHANTABILITY OR FITNESS FOR A PARTICULAR PURPOSE. THE BUYER'S SOLE AND EXCLUSIVE REMEDY SHALL BE FOR THE REPAIR OR REPLACEMENT OF DEFECTIVE PRODUCTS AS PROVIDED HEREIN. THE BUYER AGREES THAT NO OTHER REMEDY (INCLUDING, BUT NOT LIMITED TO, INCIDENTAL OR CONSEQUENTIAL DAMAGES FOR LOST PROFITS, LOST SALES, INJURY TO PERSON OR PROPERTY OR ANY OTHER INCIDENTAL OR CONSEQUENTIAL LOSS) SHALL BE AVAILABLE.

Victaulic neither assumes nor authorizes any person to assume for it any other liability in connection with the sale of products.

Items purchased by Victaulic and resold will have the original equipment manufacturer's warranty extended to Victaulic customers.

How to Get Service: Contact Victaulic at 610-559-3300 within one year after delivery to the original buyer to arrange for an examination of the product. You will be asked to ship the product to Victaulic's factory, postage and transportation charges prepaid, for examination. There is no charge for examination. Victaulic will examine the product and contact you within a reasonable time regarding the results of that examination and to arrange for repair or replacement of any product determined to be defective in materials or workmanship.

FIG. SE-5 Groove x Thread Reducing 90˚ Elbow

SPF/ANVIL

- SE-5 ductile iron fittings are grooved on the large end and reduced size female NPT threaded on the small end. The SE-5 fittings are ideal for all types of applications where transition from grooved to female thread is required.
- SE-5 fittings allow for convenient connection of drains, vents, pressure gauges as well as direct connection of an end of line sprinkler head.
- All sizes are UL, ULC listed and FM approved for 300 PSI working pressure.

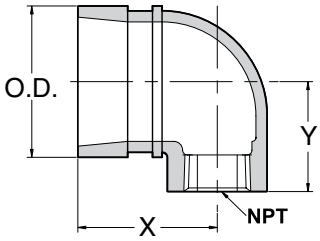

c UL us LISTED FM APPROVED

For Listings/Approval Details and Limitations, visit our website at www.anvilintl.com or contact an Anvil® Sales Representative.

SE-5 ELBOW

Nominal Size	O.D.	Max. Wk. Pressure	X	Y	Approx. Wt. Ea.
In./DN(mm)	*In./mm*	*PSI/bar*	*In./mm*	*In./mm*	*Lbs./Kg*
1¼ x ½	1.660	300	1¾	1⅜	0.5
32 x 15	*42.2*	*20.7*	*44*	*35*	*0.3*
1¼ x ¾	1.660	300	1⅞	1⅜	0.5
32 x 20	*42.2*	*20.7*	*48*	*35*	*0.3*
1¼ x 1	1.660	300	2	1½	0.6
32 x 25	*42.2*	*20.7*	*51*	*38*	*0.3*
1½ x ½	1.900	300	1¾	1⅜	0.6
40 x 15	*48.3*	*20.7*	*44*	*35*	*0.3*
1½ x ¾	1.900	300	1⅞	1⅜	0.7
40 x 20	*48.3*	*20.7*	*48*	*35*	*0.3*
1½ x 1	1.900	300	2	1½	0.8
40 x 25	*48.3*	*20.7*	*51*	*38*	*0.4*
2 x ½	2.375	300	1¾	1⅝	0.8
50 x 15	*60.3*	*20.7*	*44*	*41*	*0.4*
2 x ¾	2.375	300	1⅞	1⅝	0.9
50 x 20	*60.3*	*20.7*	*48*	*41*	*0.4*
2 x 1	2.375	300	2	1¾	1.0
50 x 25	*60.3*	*20.7*	*51*	*44*	*0.5*
2½ x ½	2.875	300	1¾	1 13/16	1.2
65 x 15	*73.0*	*20.7*	*44*	*46*	*0.5*
2½ x ¾	2.875	300	1⅞	1 13/16	1.3
65 x 20	*73.0*	*20.7*	*48*	*46*	*0.6*
2½ x 1	2.875	300	2	1 15/16	1.5
65 x 25	*73.0*	*20.7*	*51*	*49*	*0.7*
3 x ¾	3.500	300	2 1/16	2⅜	2.2
80 x 20	*88.9*	*20.7*	*52*	*60*	*1.0*
3 x 1	3.500	300	2 1/16	2½	2.5
80 x 25	*88.9*	*20.7*	*52*	*64*	*1.1*

MATERIAL SPECIFICATIONS

CAST FITTINGS:

Ductile Iron conforming to ASTM A-536, Grade 65-45-12

COATINGS:

☐ Rust inhibiting paint Color: BLACK
☐ Other available options: Example: RAL3000 or RAL9000 Series

PROJECT INFORMATION	APPROVAL STAMP
Project:	☐ **Approved**
Address:	☐ **Approved as noted**
Contractor:	☐ **Not approved**
Engineer:	**Remarks:**
Submittal Date:	
Notes 1:	
Notes 2:	

CAST IRON THREADED FITTINGS

Anvil standard and extra heavy cast iron threaded fittings are manufactured in accordance with ASME B16.4. Plugs and bushings are manufactured in accordance with ASME B16.14.

NOTE: Figure 367 Concentric Reducers do not meet the overall length requirement of ASME B16.4. All other dimensions are in compliance.

c UL us

FM APPROVED

For Listings/Approval Details and Limitations, visit our website at www.anvilintl.com or contact an Anvil Sales Representative.

Cast Iron Threaded Fittings Pressure - Temperature Ratings

Temperature		Pressure			
		Class 125		Class 250	
(°F)	*(°C)*	psi	*bar*	psi	*bar*
-20° to 150°	*-28.9 to 65.6*	175	*12.1*	400	*27.6*
200°	*93.3*	165	*11.4*	370	*25.5*
250°	*121.1*	150	*10.3*	340	*23.4*
300°	*148.9*	140	*9.7*	310	*21.4*
350°	*176.7*	125	*8.6*	300	*20.7*
400°	*204.4*	–	–	250	*17.2*

Standards and Specifications

	Dimensions	Material	Galvanizing*	Thread	Pressure Rating
CAST IRON THREADED FITTINGS					
Class 125	ASME B16.4	ASTM A-126 (A)	ASTM A-153	ASME B1.20.1	ASME B16.4
Class 250	ASME B16.4	ASTM A-126 (A)	ASTM A-153	ASME B1.20.1	ASME B16.4
CAST IRON PLUGS AND BUSHINGS					
	ASME B16.14	ASTM A- 126 (A)	ASTM A-153	ASME B1.20.1	ASME B16.14

* ASTM B 633. Type I, SC 4, may be supplied as alternate zinc coating per applicable ASME B16 product standard.

Anvil™

Manufacturer's Limited Warranty

This product has a limited warranty to be free from defects in materials and workmanship for a period of one-year from the date of purchase. This warranty does not cover accidental damages, unreasonable or improper use, normal wear and tear, loss of use, or consequential damages.

For information about our extended three-year warranty offer on select products, additional warranty information or to discuss a claim, please contact our Customer Service Team at 866-435-8665 (Monday through Friday) 8am to 5pm EST.

Fire Sprinkler Pipe

Schedule 10

Submittal Data Sheet

FM Approved and Fully Listed Sprinkler Pipe
Wheatland Tube's Schedule 10 steel fire sprinkler pipe is FM Approved and UL® and C-UL Listed.

Wheatland Tube is the only manufacturer with FM Approval on 10 NPS Schedule 10 steel fire sprinkler pipe.

Approvals and Specifications
Schedule 10 meets or exceeds the following standards:

- ASTM A135, Type E, Grade A (Schedule 10, 1–10 NPS)
- NFPA® 13 and NFPA 14

Manufacturing Protocols
Schedule 10 is subjected to the toughest possible testing protocols to ensure the highest quality and long-lasting performance.

Finishes and Coatings
Schedule 10 can be ordered in black or hot-dip galvanized to meet FM/UL requirements for dry systems that meet the zinc coating specifications of ASTM A53 or A795.

Schedule 10 receives a proprietary mill coating to ensure a clean, corrosion-resistant surface that outperforms and outlasts standard lacquer coatings. This coating allows the pipe to be easily painted without special preparation.

Every black steel Schedule 10 pipe also receives our MIC SHIELD™ antimicrobial coating to limit corrosion from microbes on the interior of the pipe.

Product Marking
Each length of Wheatland fire sprinkler pipe is continuously stenciled to show the manufacturer, type of pipe, grade, size and length. Bar coding is acceptable as a supplementary identification method.

SUBMITTAL INFORMATION

PROJECT: _____ CONTRACTOR: _____ DATE: _____

ENGINEER: _____ SPECIFICATION REFERENCE: _____ SYSTEM TYPE: _____

LOCATIONS: _____ COMMENTS: _____

☐ BLACK ☐ HOT-DIP GALVANIZED

1 Council Avenue, P.O. Box 608
Wheatland, PA 16161
P 800.257.8182
F 724.346.7260

info@wheatland.com
wheatland.com
Follow us on Twitter:
@WheatlandTube

Wheatland Tube
A DIVISION OF ZEKELMAN INDUSTRIES

Fire Sprinkler Pipe

Schedule 10

Submittal Data Sheet

SCHEDULE 10 WEIGHTS AND DIMENSIONS

NPS	NOMINAL OD		NOMINAL ID		NOMINAL WALL		WT./FT.	WT./FT. H_2O FILLED	PCS./LIFT	WT./LIFT 21'	WT./LIFT 24'	WT./LIFT 25'	UL
	in.	mm	in.	mm	in.	mm	lbs.	lbs.		lbs.	lbs.	lbs.	CRR*
1	1.315	33.4	1.097	27.9	0.109	2.77	1.405	1.814	70	2065	2360	2459	11.4
1¼	1.660	42.2	1.442	36.6	0.109	2.77	1.807	2.514	61	2315	2645	2756	7.3
1½	1.900	48.3	1.682	42.7	0.109	2.77	2.087	3.049	61	2673	3055	3183	5.8
2	2.375	60.3	2.157	54.8	0.109	2.77	2.640	4.222	37	2051	2344	2442	4.7
2½	2.875	73.0	2.635	66.9	0.120	3.05	3.354	5.895	30	2226	2544	2651	3.5
3	3.500	88.9	3.260	82.8	0.120	3.05	4.336	7.949	19	1730	1977	2060	2.6
4	4.500	114.3	4.260	108.2	0.120	3.05	5.619	11.789	19	2242	2562	2669	1.6
5	5.563	141.3	5.295	134.5	0.134	3.40	7.780	17.309	13	2124	2427	2529	1.5
6	6.625	168.3	6.357	161.5	0.134	3.40	9.298	23.038	10	1953	2232	2325	1.0
8	8.625	219.1	8.249	209.5	0.188	4.78	16.960	40.086	7	2493	2849	2968	1.7
10**	10.750	273.0	10.374	263.5	0.188	4.78	21.230	57.803	2	892	1019	1062	—

** Calculated using Standard UL CRR formula, UL Fire Protection Directory, Category VIZY. The CRR is a ratio value used to measure the ability of a pipe to withstand corrosion. Threaded Schedule 40 steel pipe is used as the benchmark (value of 1.0).*

*** 10 NPS Schedule 10 is FM Approved but not UL Listed.*

FM APPROVED

WFS-072921

1 Council Avenue, P.O. Box 608
Wheatland, PA 16161
P 800.257.8182
F 724.346.7260

info@wheatland.com
wheatland.com
Follow us on Twitter:
@WheatlandTube

Wheatland Tube
A DIVISION OF ZEKELMAN INDUSTRIES

Fire Sprinkler Pipe

Schedule 40

Submittal Data Sheet

FM Approved and Fully Listed Sprinkler Pipe
Wheatland Tube's Schedule 40 steel fire sprinkler pipe is FM Approved and UL® and C-UL Listed.

Approvals and Specifications
Schedule 40 meets or exceeds the following standards:

- ASTM A795, Type E, Grade A (Schedule 40, 1–2 NPS)
- ASTM A53, Type E, Grade B (Schedule 40, 2–8 NPS)
- ASTM A53, Type F, Grade A (Schedule 40, 1–4 NPS)
- NFPA® 13 and NFPA 14

Manufacturing Protocols
Schedule 40 is subjected to the toughest possible testing protocols to ensure the highest quality and long-lasting performance.

Finishes and Coatings
Schedule 40 can be ordered in black or hot-dip galvanized to meet FM/UL requirements for dry systems that meet the zinc coating specifications of ASTM A53 or A795.

Schedule 40 receives a proprietary mill coating to ensure a clean, corrosion-resistant surface that outperforms and outlasts standard lacquer coatings. This coating allows the pipe to be easily painted without special preparation.

Every black steel Schedule 40 pipe also receives our MIC SHIELD™ antimicrobial coating to limit corrosion from microbes on the interior of the pipe.

Product Marking
Each length of Wheatland fire sprinkler pipe is continuously stenciled to show the manufacturer, type of pipe, grade, size and length. Bar coding is acceptable as a supplementary identification method.

SUBMITTAL INFORMATION

PROJECT: _____ CONTRACTOR: _____ DATE: _____

ENGINEER: _____ SPECIFICATION REFERENCE: _____ SYSTEM TYPE: _____

LOCATIONS: _____ COMMENTS: _____

☐ BLACK ☐ HOT-DIP GALVANIZED

1 Council Avenue, P.O. Box 608
Wheatland, PA 16161
P 800.257.8182
F 724.346.7260

info@wheatland.com
wheatland.com
Follow us on Twitter:
@WheatlandTube

Wheatland Tube
A DIVISION OF ZEKELMAN INDUSTRIES

Fire Sprinkler Pipe

Schedule 40

Submittal Data Sheet

SCHEDULE 40 WEIGHTS AND DIMENSIONS

NPS	NOMINAL OD		NOMINAL ID		NOMINAL WALL		WT./FT.	WT./FT. H_2O FILLED	PCS./LIFT	WT./LIFT 21'	WT./LIFT 24'	WT./LIFT 25'	UL
	in.	mm	in.	mm	in.	mm	lbs.	lbs.		lbs.	lbs.	lbs.	CRR*
1	1.315	33.4	1.049	26.6	0.133	3.38	1.68	2.055	70	2470	2822	2940	1.000
1¼	1.660	42.2	1.380	35.1	0.140	3.56	2.27	2.922	51	2431	2778	2894	1.000
1½	1.900	48.3	1.610	40.9	0.145	3.68	2.72	3.602	44	2513	2872	2992	1.000
2	2.375	60.3	2.067	52.5	0.154	3.91	3.66	5.109	24	1845	2108	2196	1.000
2½	2.875	73.0	2.469	62.7	0.203	5.16	5.80	7.871	20	2436	2784	2900	1.000
3	3.500	88.9	3.068	77.9	0.216	5.49	7.58	10.783	13	2069	2365	2464	1.000
3½	4.000	101.6	3.548	90.1	0.226	5.74	9.12	13.400	10	1915	2189	2280	1.000
4	4.500	114.3	4.026	102.3	0.237	6.02	10.80	16.311	10	2268	2592	2700	1.000
5	5.563	141.3	5.047	158.2	0.258	6.55	14.63	23.262	7	2151	2458	2560	1.000
6	6.625	168.3	6.065	154.1	0.280	7.11	18.99	31.498	5	1994	2279	2374	1.000
8**	8.625	219.1	7.981	202.7	0.322	8.18	28.58	50.240	5	3001	3430	3573	1.000

** Calculated using Standard UL CRR formula, UL Fire Protection Directory, Category VIZY. The CRR is a ratio value used to measure the ability of a pipe to withstand corrosion. Threaded Schedule 40 steel pipe is used as the benchmark (value of 1.0).*

*** 8 NPS Schedule 40 is FM Approved but not UL Listed.*

FM APPROVED

WFS-072921

1 Council Avenue, P.O. Box 608
Wheatland, PA 16161
P 800.257.8182
F 724.346.7260

info@wheatland.com
wheatland.com
Follow us on Twitter:
@WheatlandTube

Wheatland Tube
A DIVISION OF ZEKELMAN INDUSTRIES

All Thread Rod

All Thread Rod meets following specifications:

ASTM A307	Domestic and Import All Thread Rod
ASTM A36	Domestic All Thread Rod only
ATSM B 633	Domestic and Import Clear Zinc Plated/Yellow Zinc Plated
ASTM A 153	Domestic and Import Hot Dipped Galvanized
ASTM A193–08B	Import Stainless Steel T-304
ASTM A193-B8	Domestic Stainless Steel T-304
ASTM A193 B8M	Domestic Stainless Steel T-316

Size (in. x ft.)	Ferguson Alt 1			
	Black	Galv	SS 304	SS 316
1/2X10	BATRD10	GATRD10		
1/2X12	BATRD12	GATRD12	SS4ATRD12	SS6ATRD12
1/2X6	BATRDU	GATRDU	SS4ATRDU	SS6ATRDU
1/4X10		GATRB10		
1/4X12	BATRB12			
1/4X6	BATRBU	GATRBU	SS4ATRBU	
1X10		GATRG10		
1X12		GATRG12	SS4ATRG12	
1X6	BATRGU	GATRGU	SS4ATRGU	
3/4X10	BATRF10	GATRF10		
3/4X12	BATRF12	GATRF12	SS4ATRF12	SS6ATRF12
3/4X6	BATRFU	GATRFU	SS4ATRFU	
3/8X10	BATRC10	GATRC10	SS4ATRC10	
3/8X12	BATRC12	GATRC12	SS4ATRC12	
3/8X12				SS6ATRC12
3/8X3		GATRCM		
3/8X6	BATRCU	GATRCU	SS4ATRCU	
3/8X6				SS6ATRCU
5/8X10	BATRE10	GATRE10		
5/8X12	BATRE12	GATRE12	SS4ATRE12	
5/8X3			SS4ATREM	
5/8X6	BATREU	GATREU	SS4ATREU	
7/8X10	BATR7810	GATR7810		
7/8X12	BATR7812	GATR7812	SS4ATR7812	SS6ATR7812
7/8X3			SS4ATR78M	
7/8X6	BATR78U	GATR78U	SS4ATR78U	

Distributed Exclusively by Ferguson and Wolseley Canada

© 2014 Ferguson Enterprises, Inc. All Rights Reserved

ASC Engineered Solutions

Adjustable Swivel Ring
Fig. 69

½" through 2" Size
Rounded Edge Design

2½" through 8" Size

c UL us LISTED

FM APPROVED

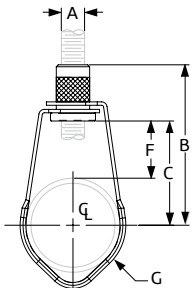

½" through 1" pipe

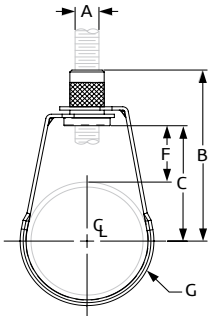

1¼" through 2" pipe

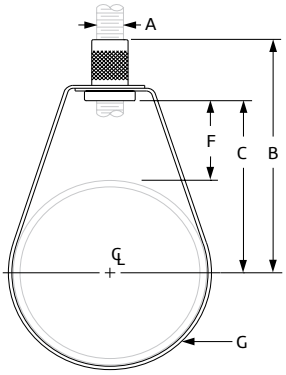

2½" through 8" pipe

Size Range: ½" through 8"

Material: Carbon steel

Finish: Strap is Pre-Galvanized Zinc Material. Nut is Zinc Plated.

Service: Recommended for suspension of non-insulated stationary pipe line.

Maximum Temperature: 450° F

Approvals: Complies with Federal Specification A-A-1192A (Type 10), WW-H-171-E (Type 10), and ANSI/MSS SP-58 (Type 10).
UL Listed and FM Approved (Sizes ¾" – 8").

Features:

- ½" – 2" sizes designed for use with steel and CPVC piping and manufactured with FBC System Compatible oil.
- Threads are countersunk so that they cannot become burred or damaged.
- Knurled swivel nut provides vertical adjustment after piping is in place.
- Captured swivel nut in the ½" through 6" sizes. The capture is permanent in the bottom portion of the band, allowing the hanger to be opened during installation if desired, but not allowing the nut to fall completely out.

Ordering:
Specify size, figure number and name.
Non-captured nut also available upon request.

Fig. 69: Dimensions (in) • **Loads** (lbs) • **Weight** (lbs)

Pipe Size	Max Load	Weight	Rod Size A	B	C	F	G Width
½	300	0.10	⅜	2⅞	2	1 9/16	⅝
¾		0.10		2¾	1⅞	1 5/16	
1		0.10		2 9/16	1 11/16	1	
1¼		0.10		2⅝	1¾	⅞	
1½		0.10		2¾	1⅞		
2		0.11		3¼	2⅜	1⅛	
2½	525	0.20		4	2¾	1 5/16	¾
3		0.20		3 13/16	2 15/16	1 3/16	
4	650	0.30		4 11/16	3 13/16	1 9/16	
5	1,000	0.54	½	5 5/16	4⅜		
6		0.65		6 11/16	5 9/16	2¼	
8		1.00		8 9/16	7 9/16	3¼	

ANVIL
An ASC Engineered Solution

PROJECT INFORMATION	APPROVAL STAMP
Project:	☐ Approved
Address:	☐ Approved as noted
Contractor:	☐ Not approved
Engineer:	Remarks:
Submittal Date:	
Notes 1:	
Notes 2:	

ASC Engineered Solutions

Universal C-type Clamp (Standard Throat)
Fig. 35BC

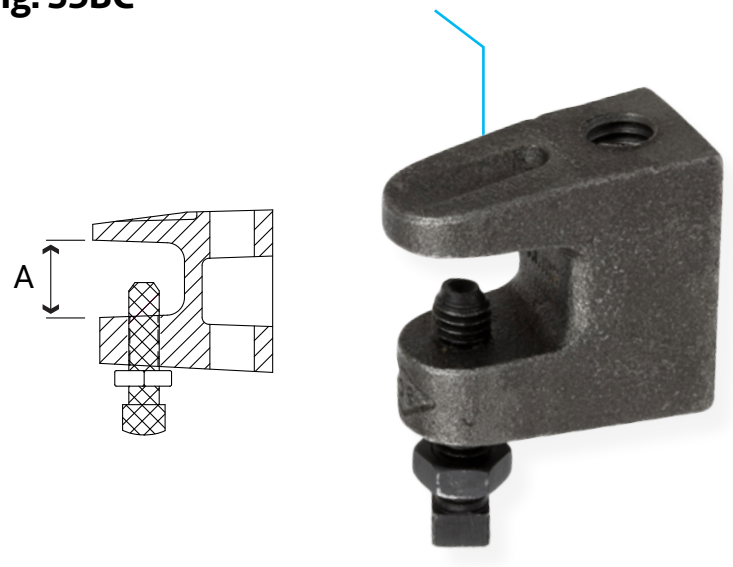

Dimensions (In) – Load (Lbs) – Torque (In-Lbs) – Weight (Lbs)

Rod Size	A	Torque Value	Design Loads ■		Weight
			Top	Bottom	
In.	In.	In.-Lbs.	Lbs.	Lbs.	Lbs.
3/8	3/8	60	400	250	0.34
1/2	3/8	125	950	760	0.63

Note:
■ Maximum temperature of 450° F

c UL us LISTED FM APPROVED

Material Specifications

Size
3/8" Rod
1/2" Rod

Material
Ductile iron, hardened steel cup point set screw and locknut.

Finish
☐ Plain
☐ Zinc Plated (Hot-Dip Galvanized optional)

Service
Recommended for use under roof installations with bar joist or I-Beam type construction, or for attachment to the top or bottom flange of structural shapes where the vertical hanger rod is required to be offset from the edge of the flange and where the thickness of joist or flange does not exceed 3/4".

Approvals
Complies with Federal Specification A-A-1192A (Type 19 & 23), WW-H-171-E (Type 23), ANSI/MSS SP-69 and MSS SP-58 (Type 19 & 23).
UL, ULC Listed and FM Approved.

How to size
Size of clamp is determined by size of rod to be used.

Installation
Follow recommended set screw torque values per MSS-SP-69.

Features
- They may be attached to horizontal flanges of structural members in either the top beam or bottom beam positions.
- Secured in place by a cup-pointed Set Screw tightened against the flange. A Jam Nut is provided for tightening the Set Screw against the Body Casting.
- Thru tapping of the body casting permits extended adjustment of the threaded rod.
- Can be used with AF090 or AF090R retaining clip for seismic applications.

Ordering
Specify rod size, figure number, name of clamp and finish.

ANVIL
An ASC Engineered Solution

PROJECT INFORMATION	APPROVAL STAMP
Project:	☐ Approved
Address:	☐ Approved as noted
Contractor:	☐ Not approved
Engineer:	Remarks:
Submittal Date:	
Notes 1:	
Notes 2:	

ASC Engineered Solutions

Swivel Attachment
Fig. AF777

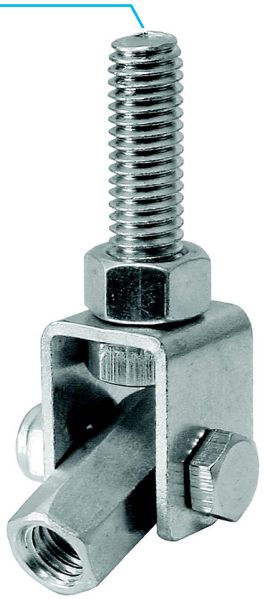

c UL us LISTED

Dimensions (In)

Rod Size	A	B	C	D	E	F
3/8	3	1 3/8	3/4	1 5/8	7/8	3/8
1/2	3 5/8	1 1/2	1 3/16	1 13/16	7/8	1/2

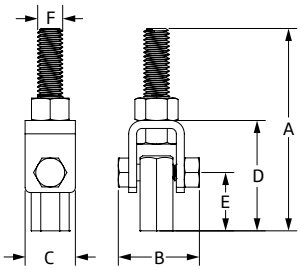

Loads (Lbs) • Dimensions (In)

Hanger Rod Diameter	UL Max Sprinkler Pipe Size (UL 203)	UL Max Seismic Restraint Load (UL 203a)	Max Hanger Load
3/8	Up to 4" Pipe	1,000	250
1/2	Up to 8" Pipe	n/a	760

Notes
ASC Engineered Solutions™ brand bracing components are designed to be compatible ONLY with other ASC Engineered Solutions brand bracing components, resulting in a Listed seismic bracing assembly. Updated UL listing information may be viewed at www.ul.com

Disclaimer
ASC Engineered Solutions does not provide any warranties and specifically disclaims any liability whatsoever with respect to ASC Engineered Solutions bracing products and components that are used in combination with products, parts or systems not manufactured or sold by ASC Engineered Solutions. In no event shall ASC Engineered Solutions be liable for any incidental, direct, consequential, special or indirect damages or lost profits where non-ASC Engineered Solutions bracing components have been, or are used.

Material Specifications

Size Range
3/8" through 1/2" rod

Material
Carbon steel

Finish
Electro-Galvanized per ASTM B633

Hanger Service:
Swivel hanger designed to support horizontal piping from angled structures. Listed for installation at angles between 0 and 90 degrees.

Restraint Service
May be installed as a branch line restraint per the requirements of NFPA 13. The AF777 may be installed directly to the structure or to the Fig. AF779.

Approvals
cULus Listed (UL 203 and UL 203a – 3/8" only). Complies with the hanging and restraint requirements listed in NFPA 13.

Installation
- Install mounting bolt into structure or structural attachment and tighten hex nut until the yoke (U-Shaped Bracket) is tight against the structure or attachment.
- Thread the hanger rod or restraint rod into the hex union until it bottoms. Back rod off a maximum of one turn to allow the hex union to swivel freely.
- Adjust angle as necessary.
- If the AF777 is exposed to vibration from the piping system or the structure, jam nuts may be installed on the mounting bolt and the threaded rod.
- Fire Protection applications shall also be installed per NFPA 13 requirements.

Features
Full 90 degree rotation allows for installation at any angle.

Ordering
Specify figure number, finish, size, and description.

ANVIL®
An ASC Engineered Solution

PROJECT INFORMATION	APPROVAL STAMP
Project:	☐ Approved
Address:	☐ Approved as noted
Contractor:	☐ Not approved
Engineer:	Remarks:
Submittal Date:	
Notes 1:	
Notes 2:	

3.3.14 HDI-P DROP-IN ANCHORS

PRODUCT DESCRIPTION

HDI-P Drop-in Anchors

Anchor System	Features and Benefits
HDI-P Drop-in Anchor	• Optimized anchor length to allow reliable fastenings in hollow core panels, precast plank and post tensioned slabs • Shallow drilling enables fast installation • Lip provides flush installation, consistent anchor depth and easy rod alignment • HSD-G 3/8 setting tool with hand guard leaves mark on flange when anchor is set properly to enable inspection and verification of proper expansion

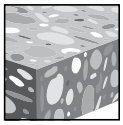
Uncracked concrete

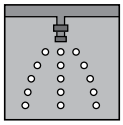
Fire sprinkler listings

MATERIAL SPECIFICATIONS

The HDI-P is manufactured from mild carbon steel, which is zinc plated for corrosion protection in accordance with ASTM B633, SC 1, Type III.

Approvals/Listings	
FM (Factory Mutual)	Pipe hanger components for automatic sprinkler systems for ¾=8-in. model

DESIGN DATA IN CONCRETE USING ALLOWABLE STRESS DESIGN

Technical data

Table 1 — Hilti HDI-P loads in normal-weight concrete and hollow core concrete panels

Nominal anchor diameter	Length in. (mm)	Nom. bit dia. in.	Ultimate loads, lb (kN)				Allowable loads, lb (kN)[3]			
			f'_c = 4,000 psi concrete		Hollow core[1,2]		f'_c = 4,000 psi concrete		Hollow core[1,2]	
			Tension	Shear	Tension	Shear	Tension	Shear	Tension	Shear
1/4	5/8 (15.9)	3/8	1,430 (6.4)	1,870 (8.3)	1,550 (6.9)	2,275 (10.1)	285 (1.3)	375 (1.7)	310 (1.4)	455 (2.0)
3/8	3/4 (19.1)	1/2	1,900 (8.5)	3,000 (13.3)	2,100 (9.3)	4,000 (17.8)	380 (1.7)	600 (2.7)	420 (1.9)	800 (3.6)
1/2	1 (25.4)	5/8	3,000 (13.3)	6,075 (27.0)	3,110 (13.8)	5,495 (24.5)	600 (2.7)	1215 (5.4)	620 (2.8)	1,100 (4.9)

1 The Admissible Anchor Location must be established to prevent damage to the prestressed cable during the drilling process. Verify the location and height of the cable with the hollow core plank supplier to confirm Admissible Anchor Location.
2 Minimum compressive strength of hollow core panels is 7,000 psi at the time of installation. The minimum thickness "t" is 1-3/8 inches.
3 Allowable loads calculated with a 5:1 factor-of-safety.

3.3.14

INSTALLATION INSTRUCTIONS

Installation Instructions For Use (IFU) are included with each product package. They can also be viewed or downloaded online at www.hilti.com (Canada). Because of the possibility of changes, always verify that downloaded IFU are current when used. Proper installation is critical to achieve full performance. Training is available on request. Contact Hilti Technical Services for applications and conditions not addressed in the IFU.

Figure 1 — Installation of Hilti HDI-P in hollow core concrete

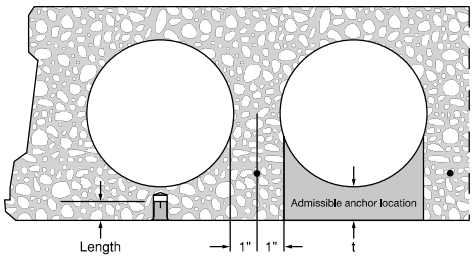

ORDERING INFORMATION

HDI-P anchor

Description	Bit diameter	Qty / box
HDI-P 1/4	3/8	100
HDI-P 3/8	1/2	100
HDI-P 1/2	5/8	50

Setting tools for HDI-P anchors

Description
HST-P 1/4 Hand Setting Tool
HST-P 3/8 Hand Setting Tool
HSD-G 3/8 Hand Setting Tool with hand guard
HST-P 1/2 Hand Setting Tool

INSTALLATION INSTRUCTIONS

Manufacturer's Printed Installation Instructions (MPII) are included with each product package. They can also be viewed or downloaded at www.hilti.com. Because of the possibility of changes, always verify that downloaded MPII are current when used. Proper installation is critical to achieve full performance. Training is available on request. Contact Hilti Technical Services for applications and conditions not addressed in the MPII.

ORDERING INFORMATION[1]

HDI+, HDI-L+ and HDI

Carbon steel

Description	Description	Anchor thread size	Qty / box
HDI+ 1/4	**HDI-L+ 1/4**	1/4	100
HDI+ 3/8	**HDI-L+ 3/8**	3/8	50
HDI+ 1/2	**HDI-L+ 1/2**	1/2	50
HDI 5/8	**–**	5/8	25
HDI 3/4	**–**	3/4	25

HDI-SS anchors

Stainless steel

Description	Anchor thread size	Qty / box
HDI 1/4 SS303	1/4	100
HDI 3/8 SS303	3/8	50
HDI 1/2 SS303	1/2	50
HDI 5/8 SS303	5/8	25
HDI 3/4 SS303	3/4	25

Setting tools for HDI and HDI-SS anchors

Description	Anchor thread size
HST 5/8 Setting Tool	5/8
HST 3/4 Setting Tool	3/4

Setting Tools for HDI+ and HDI-L+

Anchor thread size	Description
1/4	HST 1/4 Setting tool
	HSD-MM 1/4 (TE-C-24D6 1/4 Setting tool)
	HDI+ Setting Tool includes a TE-CX 3/8x1 carbide bit
3/8	HST 3/8 Setting tool
	HSD-MM 3/8 (TE-C-24SD10 3/8 Setting tool)
	HDI+ Setting Tool includes a TE-CX 1/2x1-9/16 carbide bit
1/2	HST 1/2 Setting tool
	HSD-MM 1/2 (TE-C-24SD12 1/2 Setting tool)
	HDI+ Setting Tool includes a TE-CX 5/8x2 carbide bit

1 All dimensions in inches