Sprinkler Design Data

Project: Antioch Church of Erwin		System: Wet	
Project Street Address: 494 Antioch Church Road		Sys. Sq. Ft.: 22,547	
SUITE: n/a	Floor#: n/a	Ceiling Height:Varies	
Designed By: Carolina Fire Protection	Phone: (910)-892-1700	Total Bldg. Hgt.: 25'-7"	
Occupancy: Assembly	Hazard: Ordinary Group 2		

Design Summary

Design Method	HYDRAULIC CALC.	HYDRAULIC CALC.			
Design Area #	Roof	1st Floor			
Location	Remote Area 1	Remote Area 2			
Type of System	Wet System	Wet System			
Hazard Class	Ordinary Group 1/Light	Light			
Criteria From	NFPA 13	NFPA 13			
Design Area	1500	1015			
Sprinkler Spacing	130 sqft	168 sqft			
Density	.20 / .10	.10			
K-factor	8.0 / 5.6	5.6			
Hose Allowance	250	100			
# Design Sprinklers	13	12			
Special App. Spk.	N/A	N/A			
Requirement @	BASR	BASR			
G.P.M. Req'd	249.99	203.16			
P.S.I. Req'd	30.12	30.1			
Safety Factor @	BASR	BASR			
Safety Factor (psi)	5.65 (13.2%)	11.89 (26.6%)			
System Sq Ft	22,547	17,530			
Dry Sys. Vol. (gal)	n/a	n/a			

Water Supply Information

Tested by	CFP	Date/Time	6/3/22 10:15 AM	Pressure Hydrant	
Hydrant Elevation		Flow Hydrant		Flow Hydrant	
Static (PSI)	46	Residual (PSI)	42	Flow (gpm)	579 GPM

Water test data required

Victaulic Vicflex Stainless Steel Sprinkler Fitting System:

In lieu of rigid pipe offsets or return bends for sprinkler drops, the Victaulic Vicflex Stainless Steel Sprinkler Fitting System may be used to locate sprinklers as required by final finished ceiling tiles and walls. The drop system shall consist of a braided or unbraided (corrugated) type 304 stainless steel flexible tube, a zinc plated steel 1" NPT Male threaded nipple for connection to branchline piping, and a zinc plated steel reducer with a 1/2" or 3/4" NPT female thread for connection to the sprinkler head. Union joints shall be provided for ease of installation. The flexible drop shall attach to the ceiling grid using a one-piece open gate bracket. (The bracket shall allow for sprinkler installation before or after the bracket is secured to the sprinkler grid.) The braided drop system is FM Approved for sprinkler services to 200 psi (1380 kPa) and can be installed without the use of tools, and the corrugated system is UL Listed for sprinkler services to 175 psi (1207 kPa).

a. All hoses shall be factory-pressure tested to 400 psi. (2760 kPa).
b. Approvals:
a. FM-1637 (Braided)
b. UL 2443 (Unbraided / Corrugated)
c. NYC MEA 60-05-E
d. City of Los Angeles 5/1/09 – 5/1/10.

PRODUCT LEGEND

1 1" NIPPLE (INLET)
2 NUT
3 ADAPTER RING
4 COLLAR
5 304 STAINLESS STEEL FLEXIBLE BRAIDED HOSE (1" NOMINAL DIAMETER) (LENGTHS AVAILABLE 31", 48", 60", & 72")
6 COLLAR
7 NUT
8 REDUCING OUTLET (AVAILABLE 1/2" OR 3/4" FMPT)
9 CENTER BRACKET ASSEMBLY
10 SQUARE BAR (AVAILABLE IN 24" AND 48" LENGTHS)
11 END BRACKET ASSEMBLY
12 SHEET METAL SCREW

SEE VICTAULIC SUBMITTAL NUMBER 10.85

FM

NOTES:
1. REFER TO VICTAULIC SUBMITTAL 10.85 FOR ADDITIONAL DETAILS.
2. THIS PRODUCT IS APPROVED TO APPLICABLE FM STANDARDS AND REQUIREMENTS BY FACTORY MUTUAL 1637

Victaulic

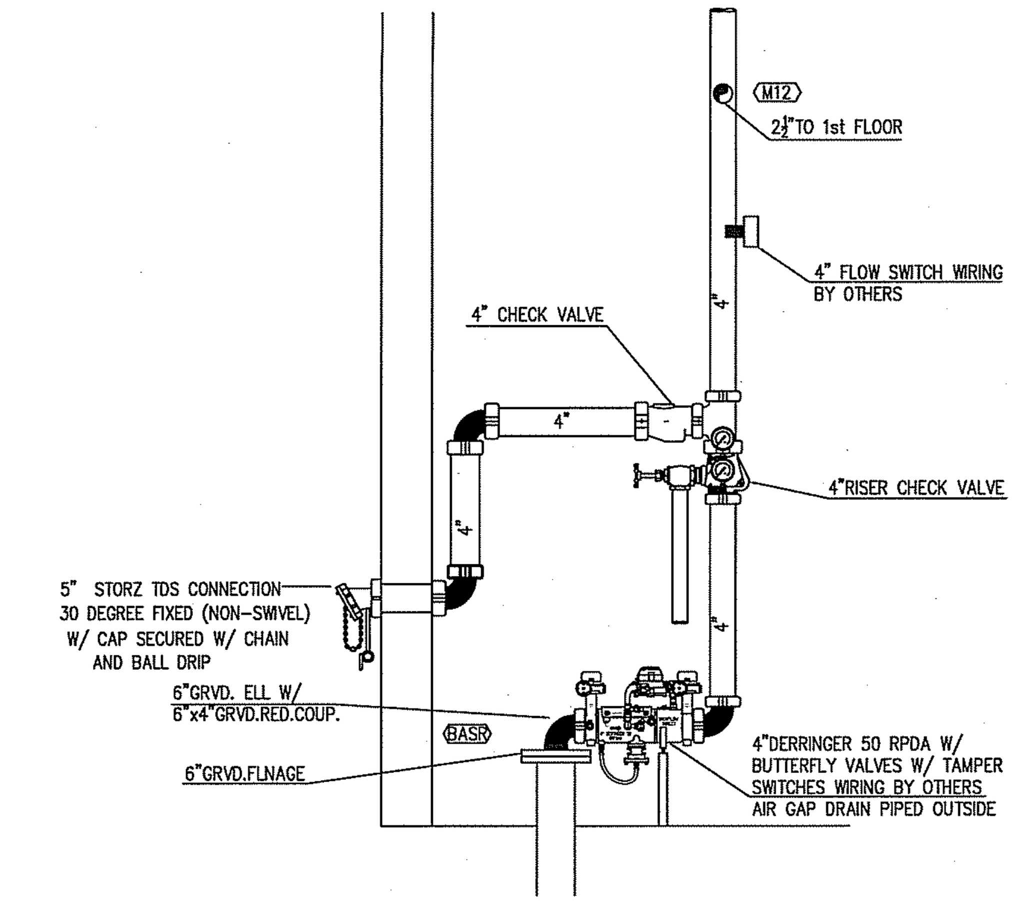

RISER DETAIL
1/2"=1'

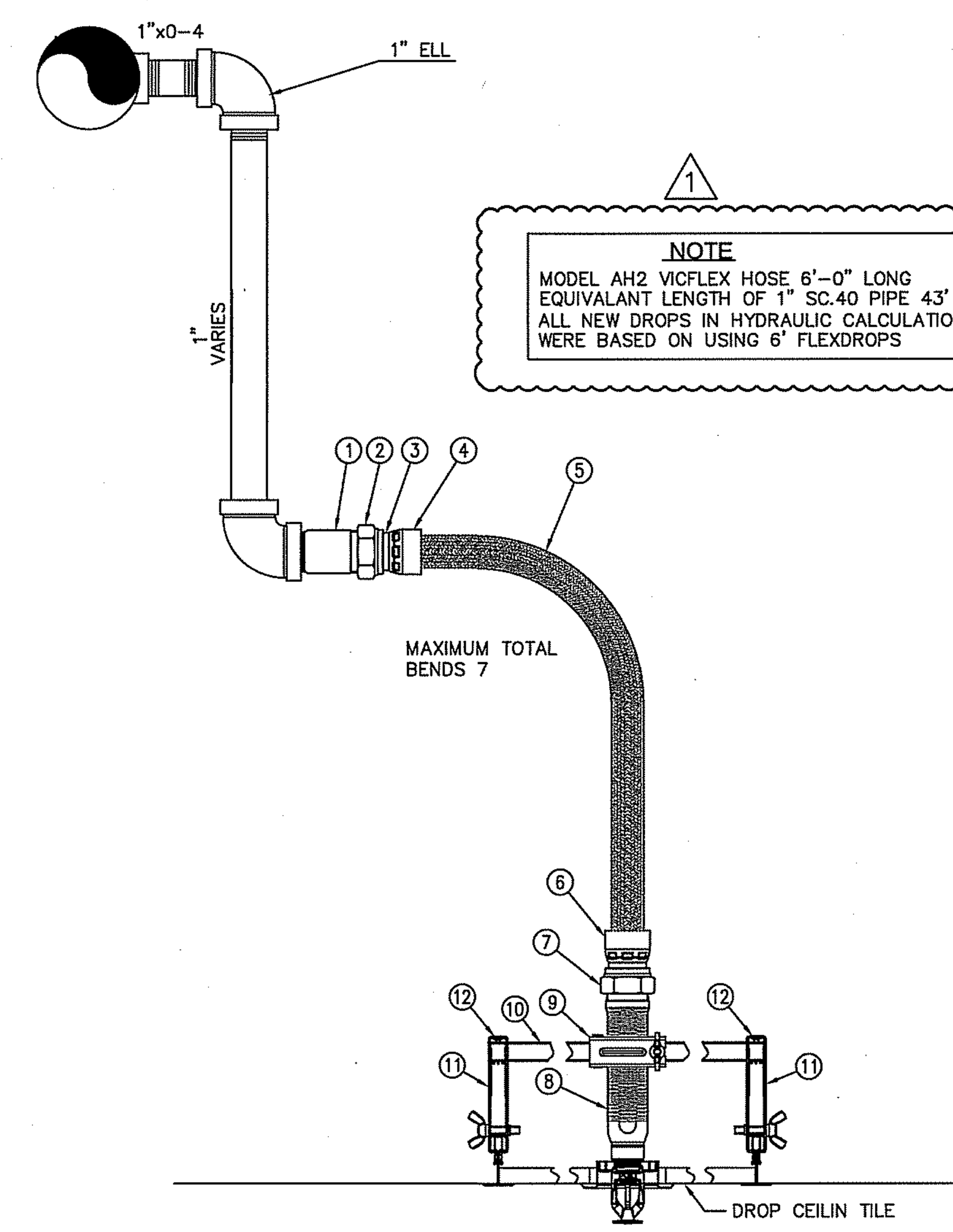

NOTE
MODEL AH2 VICFLEX HOSE 6'-0" LONG EQUIVALANT LENGTH OF 1" SC.40 PIPE 43' ALL NEW DROPS IN HYDRAULIC CALCULATIONS WERE BASED ON USING 6' FLEXDROPS

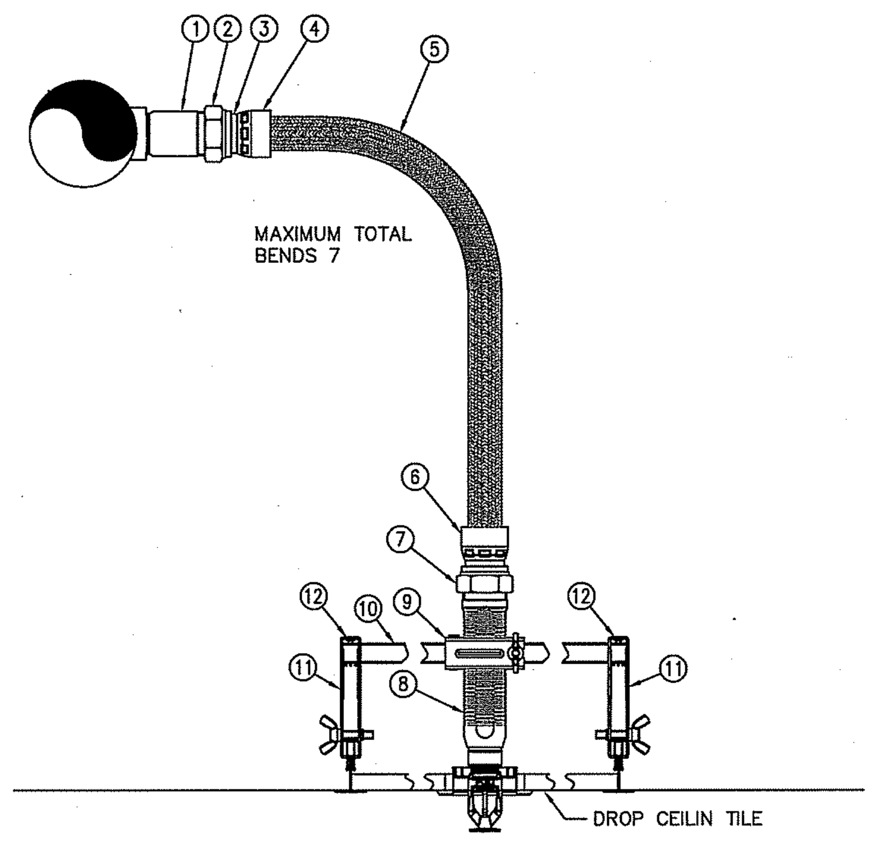

NOTES

-INSTALL WET TYPE SPRINKLER THROUGH OUT EXISTING AND NEW BUILDING.
-SYSTEM TO BE DESIGNED TO PROVIDE A DENSITY OF .15 OVER THE MOST REMOTE 1500 SQ.FT. ARE PLUS 250 GPM HOSE FOR STORAGE AND KITCHEN AREA, SANCTUARY, OFFICES AND MULTI PURPOSE AREA DESIGNED TO PROVIDE A DENSITY OF .10 OVER THE MOST REMOTE 1500 SQ.FT. AREA PLUS 100 GPM HOSE.
-ALL WORK TO BE DONE IN ACCORDANCE WITH NFPA 13.
-ALL PIPE 1 1/2" AND LARGER TO BE BLACK SCHEDULE 10 ROLLED GROOVED WITH GROOVED FITTINGS.
-1" PIPE TO BE BLACK SCHEDULE 40 WITH THREADED FITTINGS.
-UNSUPPORTED 1" BREAK OVERS NOT TO EXCEED 24"
-BUILDING TO BE HEATED AND MAINTAINED AT A MINIMUM OF 40 DEGREES BY OTHERS.
-ALL WORK TO BE DONE IN ACCORDANCE WITH NFPA 13 2013 EDITION.

HANGER INSTALLATION REQUIREMENTS

	MAXIMUM DISTANCE BETWEEN HANGERS								
NOMINAL PIPE SIZE	3/4"	1"	1-1/4"	1-1/2"	2"	2-1/2"	3"	4"	
BLAZEMASTER CPVC	5' 6"	6' 0"	6' 6"	7' 0"	8' 0"	9' 0"	10' 0"	N/A	N/A
THREADABLE LIGHTWALL	N/A	12' 0"	12' 0"	12' 0"	12' 0"	12' 0"	12' 0"	N/A	N/A
STEEL PIPE (10/ 40)	N/A	12' 0"	12' 0"	15' 0"	15' 0"	15' 0"	15' 0"	15' 0"	15' 0"

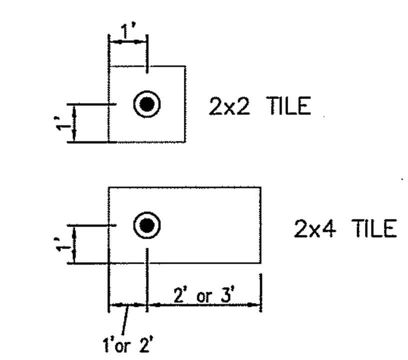

CEILING TILE DETAIL
NTS

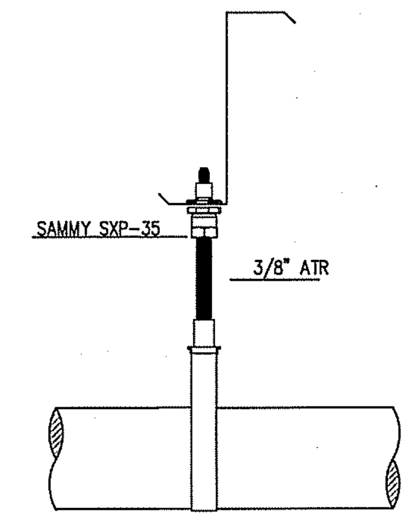

#6 Z-PURLIN HANGER DETAILS
NTS

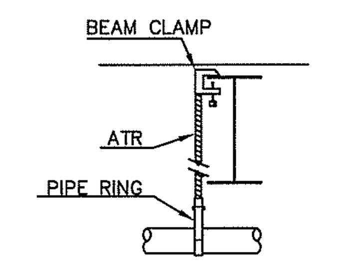

#9 HANGER DETAIL
NTS

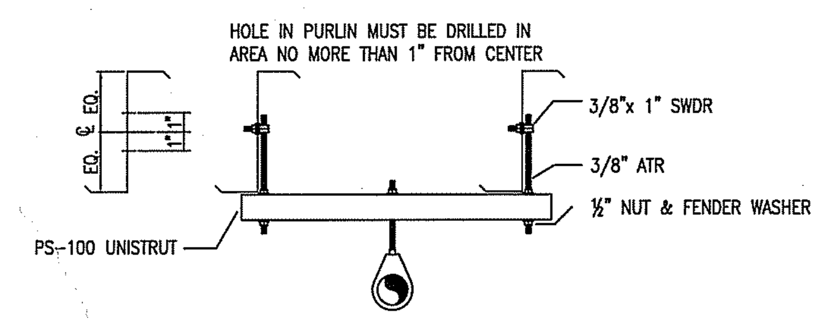

#12S HANGER DETAIL

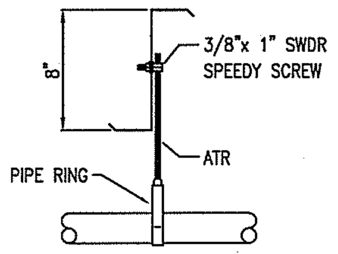

#6 HANGER DETAIL

IMPORTANT

In locations that are subject to freezing conditions, it is the owner's responsibility to provide heat throughout areas protected by wet pipe sprinkler systems and in enclosures for dry pipe, deluge or other types of valves controlling water supplies to sprinkler systems.

This drawing including all information and design concept herein contained is the property of Carolina Fire Protection Company, Inc. and is loaned upon express conditions that the same be returned to CFP,Inc. upon request; all information contained herein shall be treated as secret, and confidential; no reproduction of this drawing or any part thereof shall be made without written consent of CFP,Inc.

CONTRACT RESPONSIBILITIES

ITEM	C.F.P.	OTHERS
STREET WATER CONNECTION		N/A
UNDERGROUND WATER MAINS		N/A
EXCAVATIONS		N/A
BACKFILL		N/A
WIRING		N/A
PAINTING		N/A

SYMBOLS

CEILING HT. ABOVE REF.
C/L OF PIPE BELOW BOD
C/L OF PIPE ABOVE REF.
HYDRAULIC REF. POINT
LINE DESIGNATION
MAIN DESIGNATION
HANGER
UNION
GROOVED COUPLING (GC)
SCREWED CAP
GROOVED CAP
SCREWED PLUG
FLANGED CONNECTION
GATE VALVE(SEE NOTES)
FIRE HOSE ASSEMBLY
FLOW SWITCH (FS)
MONITOR SWITCH
BUTTERFLY VALVE
ALARM VALVE (ALV)
DRY PIPE VALVE
WAFER CHECK VALVE
SWING CHECK VALVE
SYSTEM RISER
INSPECTOR'S TEST
GLOBE VALVE
ANGLE VALVE
ELECTRIC BELL
WATER MOTOR GONG (WMG)
FIRE DEPT.CONN.(STANDARD)
FIRE DEPT.CONN.(FLUSH)
FIRE DEPT.CONN.(SIDEWALK)
POST INDICATOR VALVE (PIV)
KEY GATE SECTIONAL VALVE WITH ROADWAY BOX
FIRE HYDRANT (3 WAY)
THRUST BLOCK
2&4 WAY SEISMIC BRACING
(LOW)(HIGH) ELEVATION CHANGE IN PIPE (NOT THROUGH FLOOR)

ABBREVIATIONS

BOB Bottom of Beam
BOD Bottom of Deck
BOP Bottom of Pipe
DO Ditto
HV Hose Valve
N & C Nipple and Cap
NIC Not in Contract
NTS Not to Scale
OBJ Open Bar Joist
PRV Pressure Red. Valve
RM Roof Manifold
SP Standpipe
TOB Top of Beam
TOP Top of Pipe
TOS Top of Steel
UNO Unless Noted Otherwise

SYSTEM TYPE

WET- ☒ DELUGE- ☐
DRY- ☐ PREACTION- ☐

APPROVALS

☐ ISO ___ OUT ___ IN
☐ IRI ___ OUT ___ IN
☐ FM ___ OUT ___ IN
☐ ___ OUT ___ IN

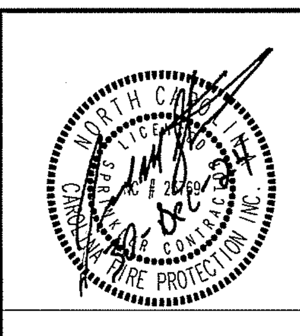

SPRINKLER SYMBOL DESCRIPTION

SYMBOL	SIZE	MODEL	MAKE	SIN	FINISH	STYLE	TEMP	K-FACTOR	TOTAL
◉	1/2	QR	VICTAULIC	V2708	CHROME	RECESSED PENDENT	155°	5.6	44
⊕	1/2	QR	VICTAULIC	V2708	CHROME	PENDENT W/2-PC DEEP ESCUTCHEON	155°	5.6	20
◓	1/2	QR	VICTAULIC	V3402	BRASS	UPRIGHT	155°	8.0	17
○	1/2	QR	VICTAULIC	V2704	BRASS	UPRIGHT	155°	5.6	266
⊗	1/2	QR	VICTAULIC	V2704	BRASS	CONCEALED SPACE SPRINKLER	200°	5.6	19
◀	1/2	QR	VICTAULIC	V2710	BRASS	HORIZONTAL SIDEWALL UNDER DOOR	155°	5.6	2
◁	1/2'	QR	VICTAULIC	V3610	BRASS	DRY HORIZONTAL SIDEWALL	200°	25.2	2
TOTAL SPRINKLERS SHOWN ON THIS SHEET									0
TOTAL SPRINKLERS REQUIRED ON THIS CONTRACT									270

CAROLINA FIRE PROTECTION
4055 HODGES CHAPEL ROAD
Dunn,N.C. 28334
Phone (910) 892-1700
Fax (910) 892-7322

NO.	DATE	REVISIONS – SEE FLAGGED AREA ON PLAN

CONTRACT NAME:
ANTIOCH CHURCH OF ERWIN
494 ANTIOCH CHURCH ROAD
ERWIN, NC

CONTRACT WITH: DENNING CONTRACTING

DESCRIPTION: INFORMATION

SYSTEM DESIGN DATA

HAZARD CLASSIFICATION: SYSTEM AREA: SQ. FT.
HYDRAULIC DESIGN DATA DENSITY: GPM/SQ. FT. COVERAGE: SQ. FT./HEAD
AREA OF APPLICATION: SQ. FT. HOSE ALLOWANCES: GPM
TOTAL SYSTEM REQUIREMENTS: GPM. AT PSI. AT
WATER SUPPLY INFORMATION: STATIC PRESSURE: PSI. RESIDUAL PRESSURE: PSI. w/ GPM FLOWING

SEE SHEET FP-1 FOR DESIGN CRITERIA

CHECKED BY: J.DUNN
DATE: 12-29-24
SCALE: 1/8"=1'-0"
CONTRACT NO: 24j961
DRAWN BY: M.FORD
DRAWING NO.

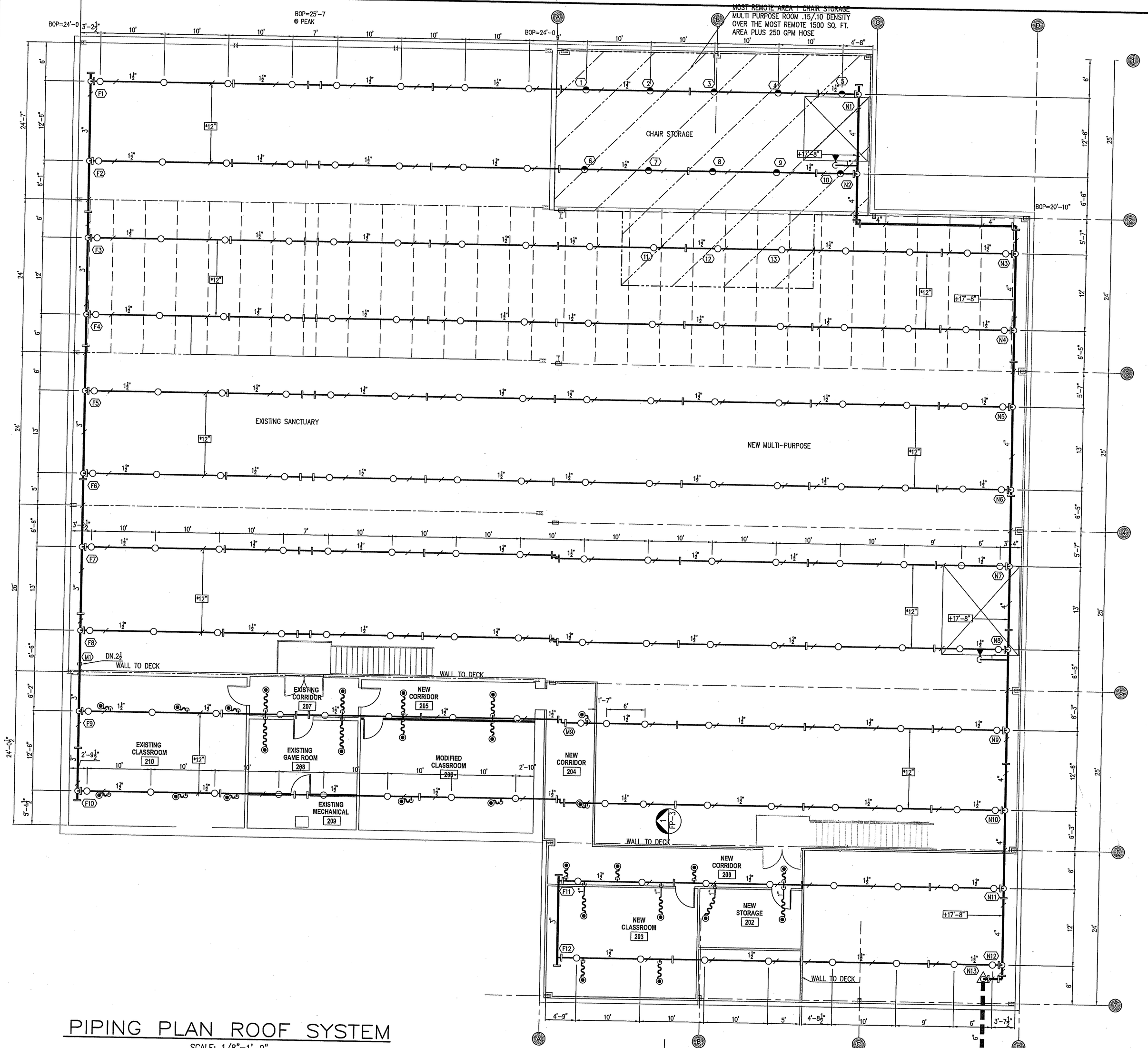

PIPING PLAN ROOF SYSTEM

SCALE: 1/8"=1'-0"

IMPORTANT

In locations that are subject to freezing conditions, it is the owner's responsibility to provide heat throughout areas protected by wet pipe sprinkler systems and in enclosures for dry pipe, deluge or other types of valves controlling water supplies to sprinkler systems.

This drawing including all information and design concept herein contained is the property of Carolina Fire Protection Company, Inc. and is loaned upon express conditions that the same be returned to CFP,Inc. upon request: all information contained herein shall be treated as secret, and confidential: no reproduction of this drawing or any part thereof shall be made without written consent of CFP,Inc.

CONTRACT RESPONSIBILITIES

ITEM	C.F.P.	OTHERS
STREET WATER CONNECTION	N/A	
UNDERGROUND WATER MAINS	N/A	
EXCAVATIONS	N/A	
BACKFILL	N/A	
WIRING	N/A	
PAINTING	N/A	

SYMBOLS

- 8—0 CEILING HT. ABOVE REF.
- *13 C/L OF PIPE BELOW BOD
- 12—4 C/L OF PIPE ABOVE REF.
- (10) HYDRAULIC REF. POINT
- LINE DESIGNATION
- A1 MAIN DESIGNATION
- HANGER
- UNION
- GROOVED COUPLING (GC)
- SCREWED CAP
- GROOVED CAP
- SCREWED PLUG
- FLANGED CONNECTION
- GATE VALVE(SEE NOTES)
- FIRE HOSE ASSEMBLY
- FS FLOW SWITCH (FS)
- MS MONITOR SWITCH
- BUTTERFLY VALVE
- AV ALARM VALVE (AV)
- DRY PIPE VALVE
- WAFER CHECK VALVE
- SWING CHECK VALVE
- SYSTEM RISER
- INSPECTOR'S TEST
- GLOBE VALVE
- ANGLE VALVE
- ELECTRIC BELL
- WATER MOTOR GONG (WMG)
- FIRE DEPT.CONN.(STANDARD)
- FIRE DEPT.CONN.(FLUSH)
- FIRE DEPT.CONN.(SIDEWALK)
- POST INDICATOR VALVE (PIV)
- KEY GATE SECTIONAL VALVE WITH ROADWAY BOX
- FIRE HYDRANT (3 WAY)
- THRUST BLOCK
- 2&4 WAY SEISMIC BRACING (LOW&HIGH) ELEVATION CHANGE IN PIPE (NOT THROUGH FLOOR)

ABBREVIATIONS

BOB	Bottom of Beam
BOD	Bottom of Deck
BOP	Bottom of Pipe
DO	Ditto
HV	Hose Valve
N & C	Nipple and Cap
NIC	Not in Contract
NTS	Not to Scale
OBJ	Open Bar Joist
PRV	Pressure Red. Valve
RM	Roof Manifold
SP	Standpipe
TOB	Top of Beam
TOP	Top of Pipe
TOS	Top of Steel
UNO	Unless Noted Otherwise

SYSTEM TYPE

WET— [X] DELUGE— [ ]
DRY— [ ] PREACTION— [ ]

APPROVALS

	OUT	IN
[ ] ISO		
[ ] IRI		
[ ] FM		
[ ]		

SPRINKLER SYMBOL DESCRIPTION

SYMBOL	SIZE	MODEL	MAKE	SIN	FINISH	STYLE	TEMP	K-FACTOR	TOTAL
	1/2	QR	VICTAULIC	V2708	CHROME	RECESSED PENDENT	155°	5.6	44
	1/2	QR	VICTAULIC	V2708	CHROME	PENDENT W/2-PC DEEP ESCUTCHEON	155°	5.6	20
	1/2	QR	VICTAULIC	V3402	BRASS	UPRIGHT	155°	8.0	17
	1/2	QR	VICTAULIC	V2704	BRASS	UPRIGHT	155°	5.6	166
	1/2	QR	VICTAULIC	V2704	BRASS	CONCEALED SPACE SPRINKLER	200°	5.6	19
	1/2	QR	VICTAULIC	V2710	BRASS	HORIZONTAL SIDEWALL UNDER DOOR	155°	5.6	2
	1/2'	QR	VICTAULIC	V3610	BRASS	DRY HORIZONTAL SIDEWALL	200°	25.2	2
TOTAL SPRINKLERS SHOWN ON THIS SHEET									202
TOTAL SPRINKLERS REQUIRED ON THIS CONTRACT									270

CAROLINA FIRE PROTECTION
4055 HODGES CHAPEL ROAD
Dunn,N.C. 28334
Phone (910) 892-1700
Fax (910) 892-7322

NO.	DATE	REVISIONS – SEE FLAGGED AREA ON PLAN

CONTRACT NAME:
ANTIOCH CHURCH OF ERWIN
494 ANTIOCH CHURCH ROAD
ERWIN, NC

CONTRACT WITH: DENNING CONTRACTING

DESCRIPTION: ROOF PIPE

SYSTEM DESIGN DATA

HAZARD CLASSIFICATION: SYSTEM AREA: SQ. FT.
HYDRAULIC DESIGN DATA DENSITY: GPM/SQ. FT. COVERAGE: SQ. FT./HEAD
AREA OF APPLICATION: SQ. FT. HOSE ALLOWANCES: GPM
TOTAL SYSTEM REQUIREMENTS: GPM. AT PSI. AT
WATER SUPPLY INFORMATION: STATIC PRESSURE: PSI- RESIDUAL PRESSURE: PSI. @ GPM FLOWING

SEE SHEET FP-1 FOR DESIGN CRITERIA

CHECKED BY: J.DUNN
DATE: 12-29-24
SCALE: 1/8"=1'-0"
CONTRACT NO: 24j961
DRAWN BY: M.FORD
DRAWING NO. FP 2 of 5

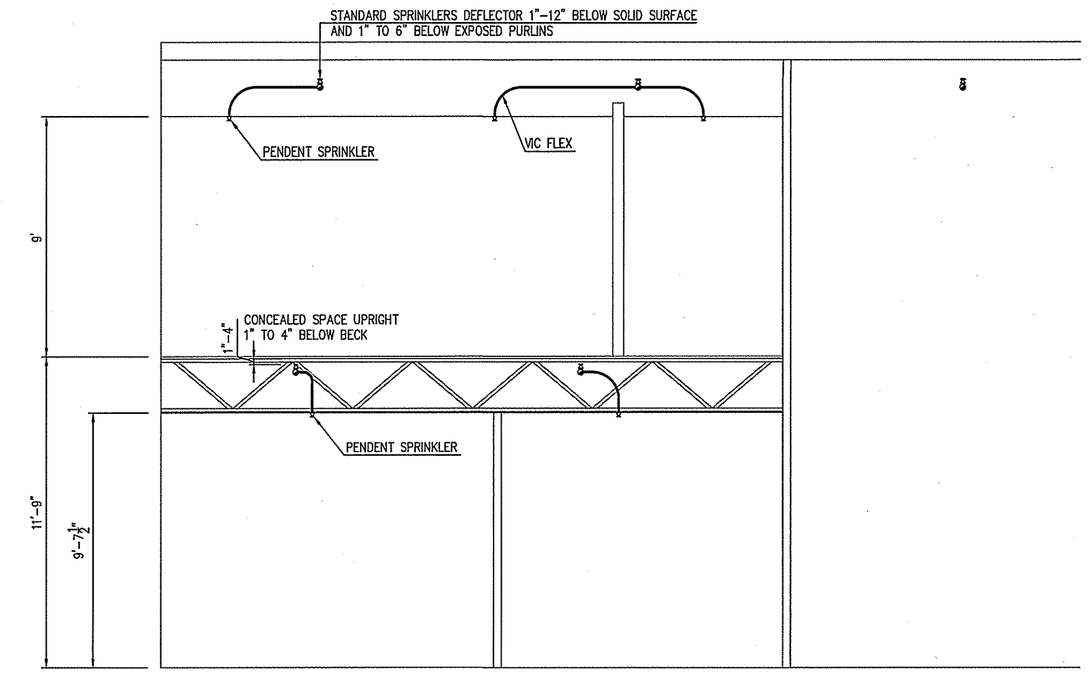

1 / FP-1 CROSS SECTION
1/4"=1'-0"

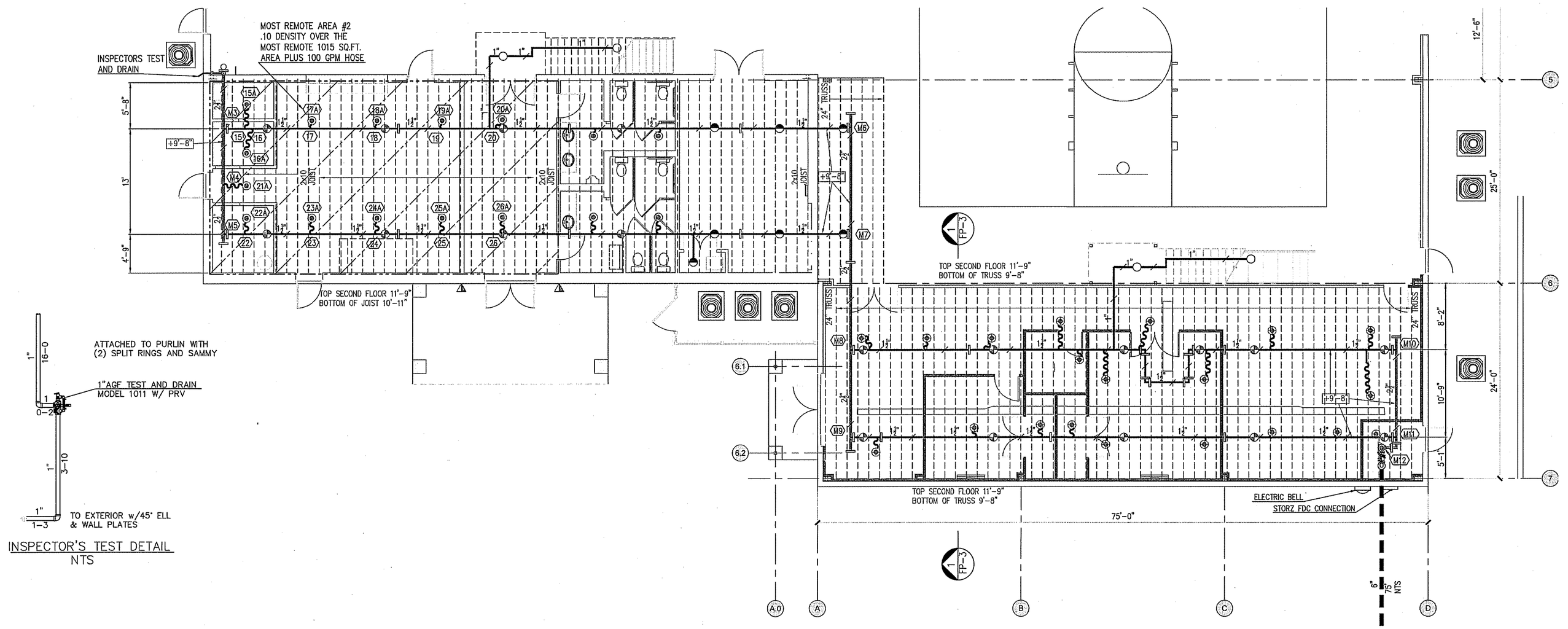

INSPECTOR'S TEST DETAIL
NTS

PIPING PLAN 1st FLOOR

SCALE: 1/8"=1'-0"

NO.	DATE	REVISIONS – SEE FLAGGED AREA ON PLAN

IMPORTANT

In locations that are subject to freezing conditions, it is the owner's responsibility to provide heat throughout areas protected by wet pipe sprinkler systems and in enclosures for dry pipe, deluge or other types of valves controlling water supplies to sprinkler systems.

This drawing including all information and design concept herein contained is the property of Carolina Fire Protection Company, Inc. and is loaned upon express conditions that the same be returned to CFP,Inc. upon request; all information contained herein shall be treated as secret, and confidential; no reproduction of this drawing or any part thereof shall be made without written consent of CFP,Inc.

CONTRACT RESPONSIBILITIES

ITEM	C.F.P. /OTHERS
STREET WATER CONNECTION	N/A
UNDERGROUND WATER MAINS	N/A
EXCAVATIONS	N/A
BACKFILL	N/A
WIRING	N/A
PAINTING	N/A

SYMBOLS

- CEILING HT. ABOVE REF.
- C/L OF PIPE BELOW BOD
- C/L OF PIPE ABOVE REF.
- HYDRAULIC REF. POINT
- LINE DESIGNATION
- MAIN DESIGNATION
- HANGER
- UNION
- GROOVED COUPLING (GC)
- SCREWED CAP
- GROOVED CAP
- SCREWED PLUG
- FLANGED CONNECTION
- GATE VALVE(SEE NOTES)
- FIRE HOSE ASSEMBLY
- FLOW SWITCH (FS)
- MONITOR SWITCH
- BUTTERFLY VALVE
- ALARM VALVE (ALV)
- DRY PIPE VALVE
- WAFER CHECK VALVE
- SWING CHECK VALVE
- SYSTEM RISER
- INSPECTOR'S TEST
- GLOBE VALVE
- ANGLE-VALVE
- ELECTRIC BELL
- WATER MOTOR GONG (WMG)
- FIRE DEPT.CONN.(STANDARD)
- FIRE DEPT.CONN.(FLUSH)
- FIRE DEPT.CONN.(SIDEWALK)
- POST INDICATOR VALVE (PIV)
- KEY GATE SECTIONAL VALVE WITH ROADWAY BOX
- FIRE HYDRANT (3 WAY)
- THRUST BLOCK
- 2&4 WAY SEISMIC BRACING
- (LOW)-(HIGH) ELEVATION CHANGE IN PIPE (NOT THROUGH FLOOR)

ABBREVIATIONS

BOB	Bottom of Beam
BOD	Bottom of Deck
BOP	Bottom of Pipe
DO	Ditto
HV	Hose Valve
N & C	Nipple and Cap
NIC	Not in Contract
NTS	Not to Scale
OBJ	Open Bar Joist
PRV	Pressure Red. Valve
RM	Roof Manifold
SP	Standpipe
TOB	Top of Beam
TOP	Top of Pipe
TOS	Top of Steel
UNO	Unless-Noted-Otherwise

SYSTEM TYPE

WET– [X] DELUGE– [ ]
DRY– [ ] PREACTION– [ ]

APPROVALS

	OUT	IN
[ ] ISO		
[ ] IRI		
[ ] FM		
[ ]		

NORTH CAROLINA CERTIFICATE OF AUTHORITY 23780 CAROLINA FIRE PROTECTION, INC.
DATE 12-30-24

SPRINKLER SYMBOL DESCRIPTION

SYMBOL	SIZE	MODEL	MAKE	SIN	FINISH	STYLE	TEMP	K-FACTOR	TOTAL
	1/2	QR	VICTAULIC	V2708	CHROME	RECESSED PENDENT	155'	5.6	44
	1/2	QR	VICTAULIC	V2708	CHROME	PENDENT W/2-PC DEEP ESCUTCHEON	155'	5.6	20
	1/2	QR	VICTAULIC	V3402	BRASS	UPRIGHT	155'	8.0	17
	1/2	QR	VICTAULIC	V2704	BRASS	UPRIGHT	155'	5.6	266
	1/2	QR	VICTAULIC	V2704	BRASS	CONCEALED SPACE SPRINKLER	200'	5.6	19
	1/2	QR	VICTAULIC	V2710	BRASS	HORIZONTAL SIDEWALL UNDER DOOR	155'	5.6	2
	1/2'	QR	VICTAULIC	V3610	BRASS	DRY HORIZONTAL SIDEWALL	155'	5.6	2
TOTAL SPRINKLERS SHOWN ON THIS SHEET									68
TOTAL SPRINKLERS REQUIRED ON THIS CONTRACT									270

CAROLINA FIRE PROTECTION
4055 HODGES CHAPEL ROAD
Dunn,N.C. 28334
Phone (910) 892-1700
Fax (910) 892-7322

CONTRACT NAME: ANTIOCH CHURCH OF ERWIN
494 ANTIOCH CHURCH ROAD
ERWIN, NC

CONTRACT WITH: DENNING CONTRACTING

DESCRIPTION: 1ST FLOOR PIPE

SYSTEM DESIGN DATA

HAZARD CLASSIFICATION:		SYSTEM AREA:	SQ. FT.
HYDRAULIC DESIGN DATA: DENSITY:	GPM/SQ. FT.	COVERAGE:	SQ. FT./HEAD
AREA OF APPLICATION:	SQ. FT.	HOSE ALLOWANCES:	GPM
TOTAL SYSTEM REQUIREMENTS:	GPM, AT	PSI, AT	
WATER SUPPLY INFORMATION: STATIC PRESSURE:	PSI, RESIDUAL PRESSURE:	PSI, w/	GPM FLOWING

SEE SHEET FP-1 FOR DESIGN CRITERIA

CHECKED BY: J.DUNN
DATE: 12-29-24
SCALE: 1/8"=1'-0"
CONTRACT NO: 24J961
DRAWN BY: M.FORD
DRAWING NO.
FP 3 of 5

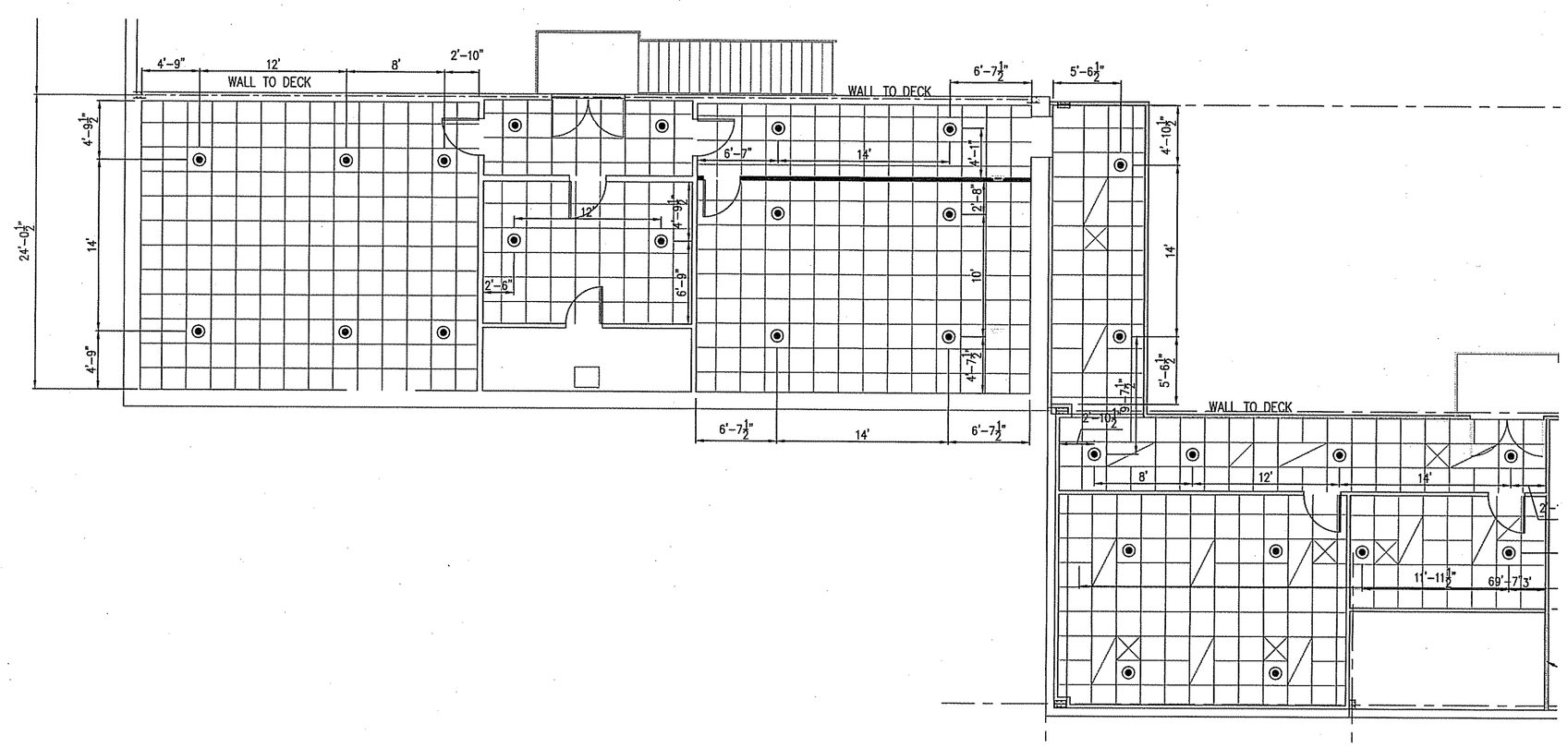

2nd FLOOR CEILING

SCALE: 1/8"=1'-0"

NO.	DATE	REVISIONS – SEE FLAGGED AREA ON PLAN
1	06/26/24	REDRAWN DOOR
2	08/26/24	REVISED MEGA SYSTEM LABEL

IMPORTANT

In locations that are subject to freezing conditions, it is the owner's responsibility to provide heat throughout areas protected by wet pipe sprinkler systems and in enclosures for dry pipe, deluge or other types of valves controlling water supplies to sprinkler systems.

This drawing including all information and design concept herein contained is the property of Carolina Fire Protection Company, Inc. and is loaned upon express conditions that the same be returned to CFP,Inc. upon request: all information contained herein shall be treated as secret, and confidential: no reproduction of this drawing or any part thereof shall be made without written consent of CFP,Inc.

CONTRACT RESPONSIBILITIES

ITEM	C.F.P. /OTHERS
STREET WATER CONNECTION	N/A
UNDERGROUND WATER MAINS	N/A
EXCAVATIONS	N/A
BACKFILL	N/A
WIRING	N/A
PAINTING	N/A

SYMBOLS

- CEILING HT. ABOVE REF.
- *13 C/L OF PIPE BELOW BOD
- 12–4 C/L OF PIPE ABOVE REF.
- (10) HYDRAULIC REF. POINT
- LINE DESIGNATION
- A1 MAIN DESIGNATION
- HANGER
- UNION
- GROOVED COUPLING (GC)
- SCREWED CAP
- GROOVED CAP
- SCREWED PLUG
- FLANGED CONNECTION
- GATE VALVE(SEE NOTES)
- FIRE HOSE ASSEMBLY
- FLOW SWITCH (FS)
- MONITOR SWITCH
- BUTTERFLY VALVE
- ALARM VALVE (ALV)
- DRY PIPE VALVE
- WAFER CHECK VALVE
- SWING CHECK VALVE
- SYSTEM RISER
- INSPECTOR'S TEST
- GLOBE VALVE
- ANGLE VALVE
- ELECTRIC BELL
- WATER MOTOR GONG (WMG)
- FIRE DEPT.CONN.(STANDARD)
- FIRE DEPT.CONN.(FLUSH)
- FIRE DEPT.CONN.(SIDEWALK)
- POST INDICATOR VALVE (PIV)
- KEY GATE SECTIONAL VALVE WITH ROADWAY BOX
- FIRE HYDRANT (3 WAY)
- THRUST BLOCK
- 2&4 WAY SEISMIC BRACING
- (LOW)(HIGH) ELEVATION CHANGE IN PIPE (NOT THROUGH FLOOR)

ABBREVIATIONS

BOB	Bottom of Beam
BOD	Bottom of Deck
BOP	Bottom of Pipe
DO	Ditto
HV	Hose Valve
N & C	Nipple and Cap
NIC	Not in Contract
NTS	Not to Scale
OBJ	Open Bar Joist
PRV	Pressure Red. Valve
RM	Roof Manifold
SP	Standpipe
TOB	Top of Beam
TOP	Top of Pipe
TOS	Top of Steel
UNO	Unless Noted Otherwise

SYSTEM TYPE

WET– [X] DELUGE– [ ]
DRY– [ ] PREACTION– [ ]

APPROVALS

	OUT	IN
ISO		
IRI		
FM		

SPRINKLER SYMBOL DESCRIPTION

SYMBOL	SIZE	MODEL	MAKE	SIN	FINISH	STYLE	TEMP	K-FACTOR	TOTAL
	1/2	QR	VICTAULIC	V2708	CHROME	RECESSED PENDENT	155°	5.6	44
	1/2	QR	VICTAULIC	V2708	CHROME	PENDENT W/2–PC DEEP ESCUTCHEON	155°	5.6	20
	1/2	QR	VICTAULIC	V3402	BRASS	UPRIGHT	155°	8.0	17
	1/2	QR	VICTAULIC	V2704	BRASS	UPRIGHT	155°	5.6	266
	1/2	QR	VICTAULIC	V2704	BRASS	CONCEALED SPACE SPRINKLER	200°	5.6	19
	1/2	QR	VICTAULIC	V2710	BRASS	HORIZONTAL SIDEWALL UNDER DOOR	155°	5.6	2
	1/2'	QR	VICTAULIC	V3610	BRASS	DRY HORIZONTAL SIDEWALL	155°	5.6	2
TOTAL SPRINKLERS SHOWN ON THIS SHEET									28
TOTAL SPRINKLERS REQUIRED ON THIS CONTRACT									270

CAROLINA FIRE PROTECTION
4055 HODGES CHAPEL ROAD
Dunn,N.C. 28334
Phone (910) 892–1700
Fax (910) 892–7322

CONTRACT NAME: ANTIOCH CHURCH OF ERWIN
494 ANTIOCH CHURCH ROAD
ERWIN, NC

CONTRACT WITH: DENNING CONTRACTING

DESCRIPTION: INFORMATION

SYSTEM DESIGN DATA

HAZARD CLASSIFICATION: SYSTEM AREA: SQ. FT.
HYDRAULIC DESIGN DATA DENSITY: GPM/SQ. FT. COVERAGE: SQ. FT./HEAD
AREA OF APPLICATION: SQ. FT. HOSE ALLOWANCES: GPM
TOTAL SYSTEM REQUIREMENTS: GPM, AT PSI, AT
WATER SUPPLY INFORMATION: STATIC PRESSURE: PSI, RESIDUAL PRESSURE: PSI, w/ GPM FLOWING

SEE SHEET FP–1 FOR DESIGN CRITERIA

CHECKED BY: J.DUNN
DATE: 12–29–24
SCALE: 1/8"=1'–0"
CONTRACT NO: 24J961
DRAWN BY: M.FORD

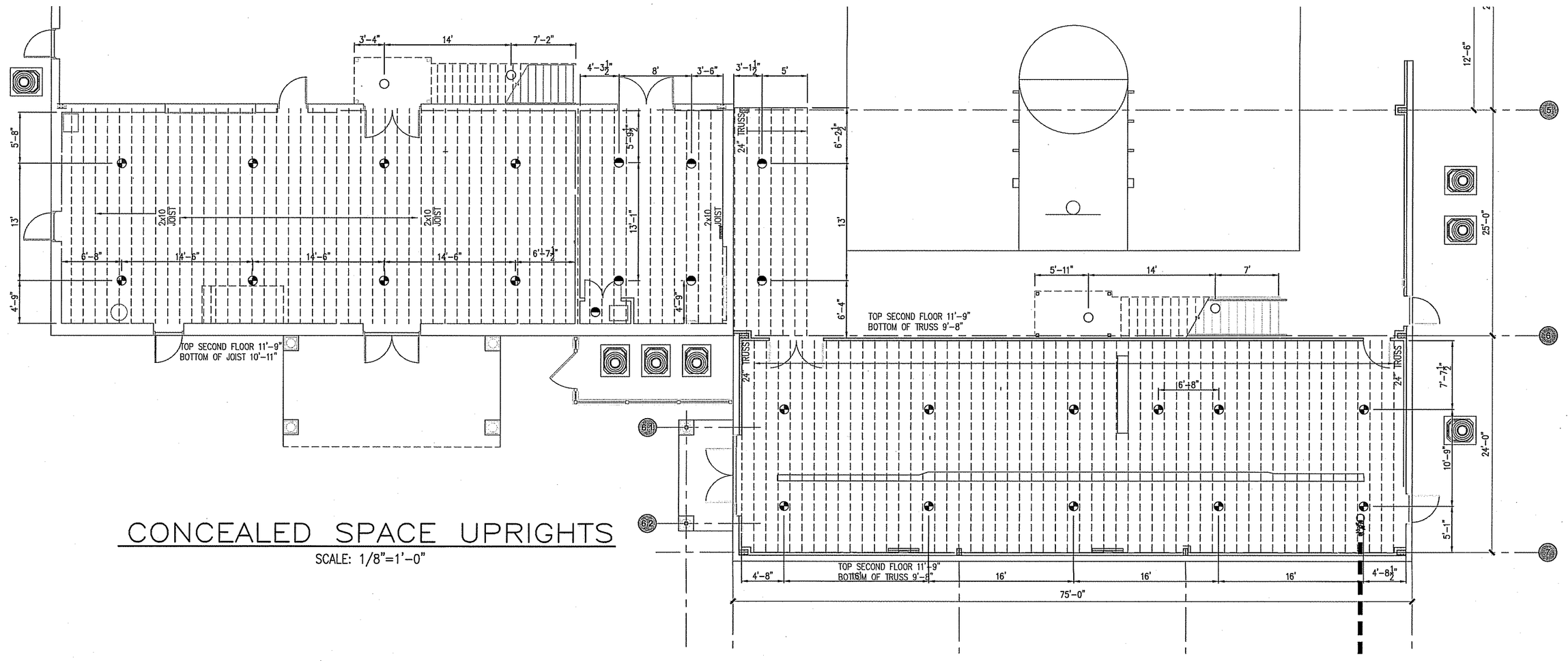

CONCEALED SPACE UPRIGHTS

SCALE: 1/8"=1'-0"

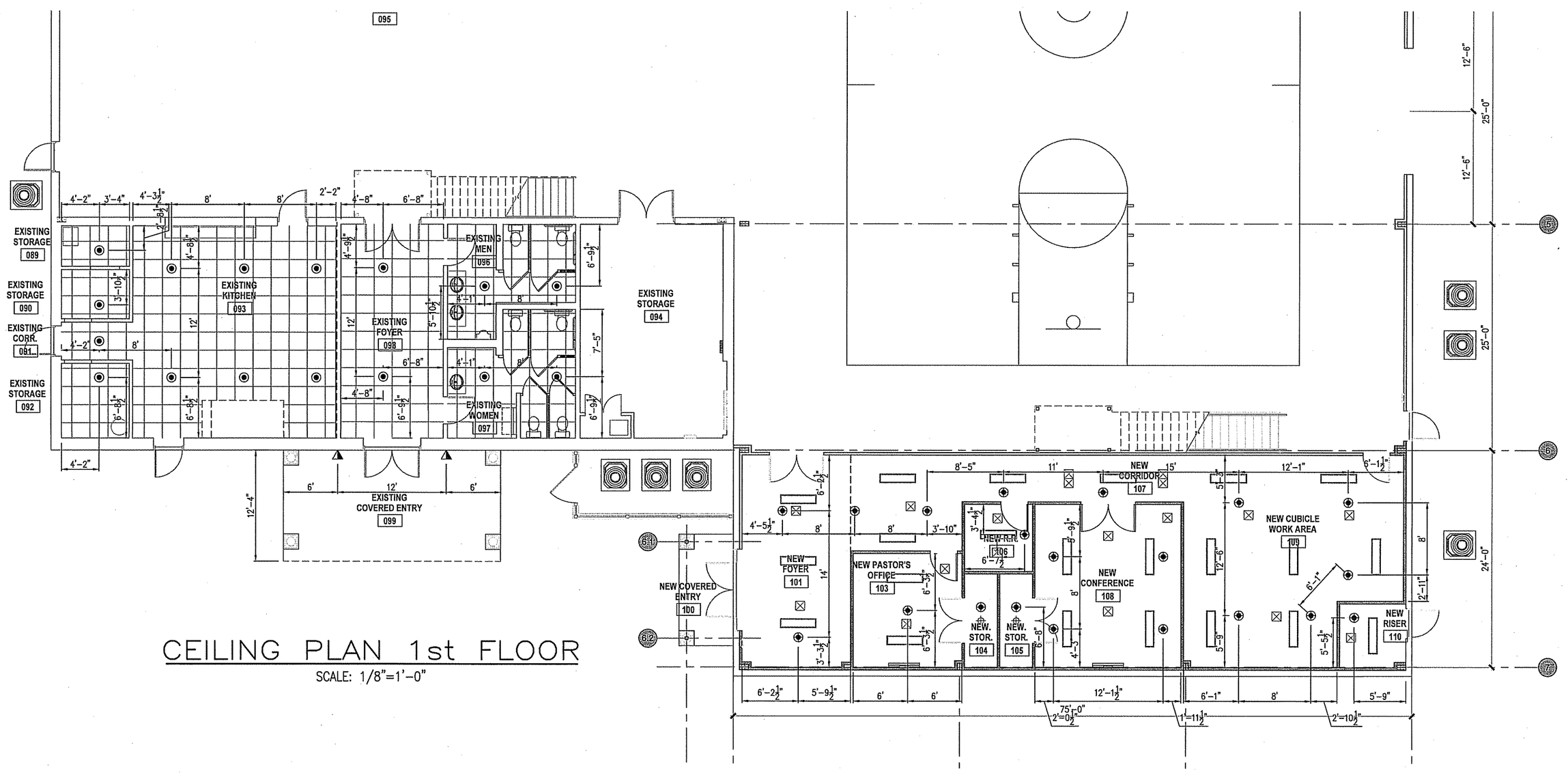

CEILING PLAN 1st FLOOR

SCALE: 1/8"=1'-0"

NO.	DATE	REVISIONS – SEE FLAGGED AREA ON PLAN

IMPORTANT

In locations that are subject to freezing conditions, it is the owner's responsibility to provide heat throughout areas protected by wet pipe sprinkler systems and in enclosures for dry pipe, deluge or other types of valves controlling water supplies to sprinkler systems.

This drawing including all information and design concept herein contained is the property of Carolina Fire Protection Company, Inc. and is loaned upon express conditions that the same be returned to CFP,Inc. upon request: all information contained herein shall be treated as secret, and confidential: no reproduction of this drawing or any part thereof shall be made without written consent of CFP,Inc.

CONTRACT RESPONSIBILITIES

ITEM	C.F.P.	/OTHERS
STREET WATER CONNECTION	N/A	
UNDERGROUND WATER MAINS	N/A	
EXCAVATIONS	N/A	
BACKFILL	N/A	
WIRING	N/A	
PAINTING	N/A	

SYMBOLS

- CEILING HT. ABOVE REF.
- C/L OF PIPE BELOW BOD
- C/L OF PIPE ABOVE REF.
- HYDRAULIC REF. POINT
- LINE DESIGNATION
- MAIN DESIGNATION
- HANGER
- UNION
- GROOVED COUPLING (GC)
- SCREWED CAP
- GROOVED CAP
- SCREWED PLUG
- FLANGED CONNECTION
- GATE VALVE(SEE NOTES)
- FIRE HOSE ASSEMBLY
- FLOW SWITCH (FS)
- MONITOR SWITCH
- BUTTERFLY VALVE
- ALARM VALVE (ALV)
- DRY PIPE VALVE
- WAFER CHECK VALVE
- SWING CHECK VALVE
- SYSTEM RISER
- INSPECTOR'S TEST
- GLOBE VALVE
- ANGLE VALVE
- ELECTRIC BELL
- WATER MOTOR GONG (WMG)
- FIRE DEPT.CONN.(STANDARD)
- FIRE DEPT.CONN.(FLUSH)
- FIRE DEPT.CONN.(SIDEWALK)
- POST INDICATOR VALVE (PIV)
- KEY GATE SECTIONAL VALVE WITH ROADWAY BOX
- FIRE HYDRANT (3 WAY)
- THRUST BLOCK
- 2&4 WAY SEISMIC BRACING
- ELEVATION CHANGE IN PIPE (FLOW DWSN) (NOT THROUGH FLOOR)

ABBREVIATIONS

BOB	Bottom of Beam
BOD	Bottom of Deck
BOP	Bottom of Pipe
DO	Ditto
HV	Hose Valve
N & C	Nipple and Cap
NIC	Not in Contract
NTS	Not to Scale
OBJ	Open Bar Joist
PRV	Pressure Red. Valve
RM	Roof Manifold
SP	Standpipe
TOB	Top of Beam
TOP	Top of Pipe
TOS	Top of Steel
UNO	Unless Noted Otherwise

SYSTEM TYPE

WET– ☒ DELUGE– ☐
DRY– ☐ PREACTION– ☐

APPROVALS

	OUT	IN
☐ ISO		
☐ IRI		
☐ FM		
☐		

SPRINKLER SYMBOL DESCRIPTION

SYMBOL	SIZE	MODEL	MAKE	SIN	FINISH	STYLE	TEMP	K-FACTOR	TOTAL
	1/2	QR	VICTAULIC	V2708	CHROME	RECESSED PENDENT	155°	5.6	44
	1/2	QR	VICTAULIC	V2708	CHROME	PENDENT W/2-PC DEEP ESCUTCHEON	155°	5.6	20
	1/2	QR	VICTAULIC	V3402	BRASS	UPRIGHT	155°	8.0	17
	1/2	QR	VICTAULIC	V2704	BRASS	UPRIGHT	155°	5.6	266
	1/2	QR	VICTAULIC	V2704	BRASS	CONCEALED SPACE SPRINKLER	200°	5.6	19
	1/2	QR	VICTAULIC	V2710	BRASS	HORIZONTAL SIDEWALL UNDER DOOR	155°	5.6	2
	1/2'	QR	VICTAULIC	V3610	BRASS	DRY HORIZONTAL SIDEWALL	155°	5.6	2
TOTAL SPRINKLERS SHOWN ON THIS SHEET									64
TOTAL SPRINKLERS REQUIRED ON THIS CONTRACT									270

CAROLINA FIRE PROTECTION
4055 HODGES CHAPEL ROAD
Dunn,N.C. 28334
Phone (910) 892-1700
Fax (910) 892-7322

CONTRACT NAME: ANTIOCH CHURCH OF ERWIN
494 ANTIOCH CHURCH ROAD
ERWIN, NC

CONTRACT WITH: DENNING CONTRACTING

DESCRIPTION: 1st Floor ceiling

SYSTEM DESIGN DATA

HAZARD CLASSIFICATION:		SYSTEM AREA:	SQ. FT.
HYDRAULIC DESIGN DATA DENSITY:	GPM/SQ. FT.	COVERAGE:	SQ. FT./HEAD
AREA OF APPLICATION:	SQ. FT.	HOSE ALLOWANCES:	GPM
TOTAL CRITERIA REQUIREMENTS:	GPM. AT	PSI. AT	
WATER SUPPLY INFORMATION:	STATIC PRESSURE: PSI. RESIDUAL PRESSURE:	PSI. @	GPM FLOWING

SEE SHEET FP-1 FOR DESIGN CRITERIA

CHECKED BY:	J.DUNN
DATE:	12-29-24
SCALE:	1/8"=1'-0"
CONTRACT NO:	24J961
DRAWN BY:	M.FORD