FIRE ALARM

WALL / CEILING SYMBOL	DESCRIPTION
H / H x	HORN AND STROBE FIRE ALARM SYSTEM. X = cd
S / S x	SPEAKER AND STROBE FIRE ALARM SYSTEM. X = cd
H / F x	HORN ONLY, FIRE ALARM SYSTEM.
x / x	FIRE ALARM STROBE ONLY DEVICE. X=cd
F	MANUAL FIRE ALARM PULL STATION
DD	DUCT DETECTOR, FURNISHED BY E.C. INSTALLED BY M.C. REQUIRED FOR ALL HVAC SYSTEM OVER 2000 CFM, COORDINATE FINAL COUNTS AND LOCATIONS WITH M.C.
L	FLUSH MOUNTED CEILING FIRE ALARM SYSTEM DUCT DETECTOR REMOTE TEST STATION AND ALARM INDICATING LAMP.
R	FIRE ALARM SYSTEM RELAY. SUBSCRIPT, WHEN SHOWN, INDICATES ZONE.
SD	LOCAL 120v SMOKE DETECTOR.
S	SYSTEM SMOKE DETECTOR. SMOKE DETECTOR NOMENCLATURE — P PHOTOELECTRIC; I IONIZATION; R RELAY BASE
S	SYSTEM SMOKE DETECTOR WITH SOUNDER BASE
S #	SYSTEM SMOKE DETECTOR WITH STROBE BASE
SE	SYSTEM SMOKE DETECTOR FOR ELEVATOR RECALL.
HD	LOCAL 120v HEAT DETECTOR.
H	SYSTEM HEAT DETECTOR.
HR	SYSTEM HEAT DETECTOR. RATE OF RISE
HF #	SYSTEM HEAT DETECTOR. FIXED TEMP, #° = ACTIVATING TEMP
CO	CARBON MONOXIDE DETECTOR
CO2	CARBON DIOXIDE DETECTOR
FS	SYSTEM FIRE WATER FLOW MONITORING SWITCH.
TS	SYSTEM FIRE WATER TAMPER MONITORING SWITCH.
HO	MAGNETIC DOOR HOLD OPEN. PROVIDE 120v AND FIRE ALARM INTERFACE. HOLD OPEN WILL DE-ENERGIZE ALLOWING DOOR TO CLOSE WHEN FIRE ALARM IS ACTIVATED
FACP	FIRE ALARM CONTROL PANEL
FAA	FIRE ALARM ANNUNCIATOR PANEL
FAPS	FIRE ALARM POWER SUPPLY
FATC	FIRE ALARM TERMINAL CABINET
CM	FIRE ALARM ADDRESSABLE CONTROL MODULE
MM	FIRE ALARM ZONE INTERFACE MODULE WITH RELAY
PS	PRESSURE SWITCH FOR DRY TYPE SPRINKLER SYSTEM. FURNISHED AND INSTALLED BY THE PLUMBING CONTRACTOR AND WIRED BY THE ELECTRICAL CONTRACTOR.
GDS	GAS DETECTION SYSTEM
MS	FIREMAN'S TWO-WAY COMMUNICATION SYSTEM MASTER STATION.
CS	FIREMAN'S TWO-WAY COMMUNICATION SYSTEM CALL STATION.
FSD Z DD CM	FIRE SMOKE DAMPER (BY MC), PROVIDE DUCT DETECTOR, 120V POWER, CONTROL MODULE, & INTERFACE MODULE TO FIRE ALARM SYSTEM. COORDINATE FINAL COUNTS AND LOCATIONS WITH M.C.

MOUNTING HEIGHT SCHEDULE

HEIGHT	MOUNTING
4-INCHES BELOW THE FINISHED CEILING TO TOP OF DEVICE AND NOT MORE THAN 12-INCHES TO BOTTOM OF DEVICE.	TOP OF WALL MOUNTED HEAT OR SMOKE DETECTORS
6'-8" AFF OR 6" BELOW FINISHED CEILING, WHICHEVER IS LOWER (BOTTOM OF LENS; MIN.) 96-INCHES AFF MAXIMUM.	TOP OF FIRE ALARM HORNS/STROBES
6'-0"	TOP OF FIRE ALARM CONTROL PANEL
4'-0" MAX	TOP OF PULL HANDLE ON FIRE ALARM PULL STATIONS
0'-0"	FINISHED FLOOR

GENERAL NOTES

1. THE WIRING REQUIREMENTS CHANGE FROM MANUFACTURER TO MANUFACTURER. VERIFY WIRING WITH THE FIRE ALARM MANUFACTURER AND INSTALL AS DIRECTED AND APPROVED.
2. THE FIRE ALARM SYSTEM PRODUCT DATA INFORMATION, BATTERY CALCULATIONS, VOLTAGE DROP CALCULATIONS, INSTALLATION DRAWINGS AND DETAILS WILL BE PROVIDED AS A DEFERRED SUBMISSION TO THE FIRE ALARM PERMIT REVIEWER FROM THE CONTRACTOR AFTER THE FIRE ALARM SYSTEM VENDOR HAS SUBMITTED THE INFORMATION TO BE REVIEWED AND APPROVED BY THE ENGINEER.
3. SOUND PRESSURE COVERAGE THROUGHOUT THE BUILDING WILL BE DETERMINED AFTER THE FIRE ALARM SYSTEM HAS BEEN INSTALLED. ADDITIONAL DEVICES WILL BE ADDED IF THE COVERAGE IS DEEMED TO BE INADEQUATE BY THE INSPECTOR DURING THE FIRE ALARM SYSTEM TEST.
4. 25 PERCENT SPARE CAPACITY SHALL BE PROVIDED ON ALL NOTIFICATION APPLIANCE CIRCUITS FOR ANY ADDITIONAL DEVICES THAT MAY BE ADDED IN THE FUTURE. ALL EMPLOYEE WORK AREAS SHALL HAVE AUDIBLE AND VISUAL APPLIANCES.
5. ALL AUDIBLE DEVICES SHALL PROVIDE A SOUND PRESSURE LEVEL OF 15 DECIBELS ABOVE THE AVERAGE AMBIENT SOUND LEVEL OR 5 DECIBELS ABOVE THE MAXIMUM SOUND LEVEL FOR A DURATION OF NOT LESS THAN 60 SECONDS, WHICHEVER IS GREATER. PER 907.5.2.1.1.

FIRE ALARM SHEET INDEX FIT-UP

FAI102	FIRE ALARM - NEW WORK PLAN - LEVEL 2
FAI001	FIRE ALARM DATA SHEET
FAI101	FIRE ALARM - NEW WORK PLAN - LEVEL 1

INSTALLATION REQUIREMENTS

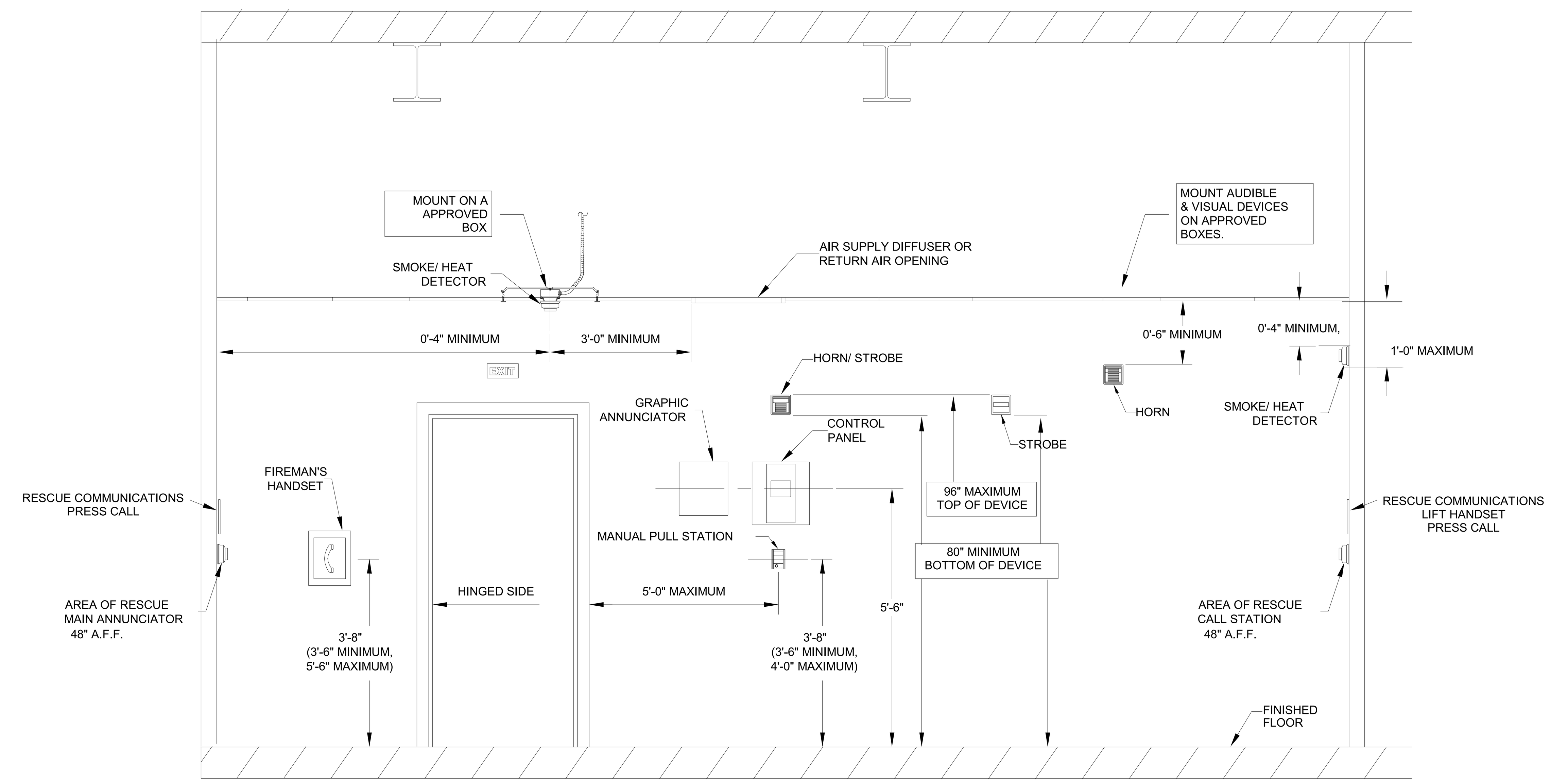

1 TYPICAL MOUNTING HEIGHT OF FIRE ALARM DEVICES TI
SCALE: NTS

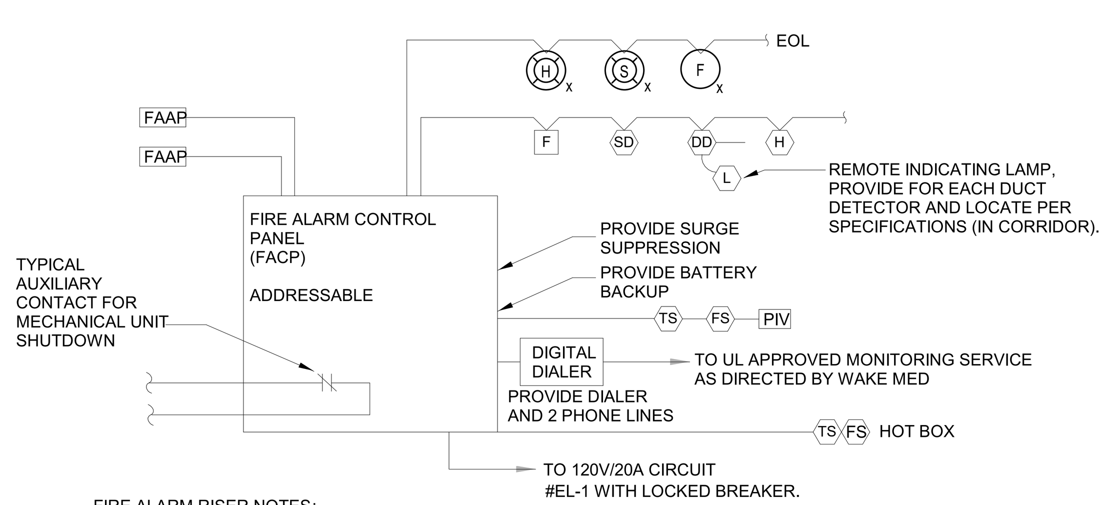

FIRE ALARM RISER NOTES:

1. ALL CONDUCTORS SHALL BE IN METALLIC RACEWAYS. MC CABLE MAY BE USED IN CERTAIN LOCATIONS.
2. SEE PLANS FOR QUANTITY AND TYPE OF DEVICES. INITIATING DEVICES ARE: F D SD FS TS H DD. INDICATING DEVICES ARE: H x S x F x
3. UPON ACTIVATION OF ANY INITIATING DEVICE, ALL INDICATING DEVICES SHALL ANNUNCIATE AS DESCRIBED IN SPECIFICATIONS.
4. UPON ACTIVATION OF SMOKE DETECTOR ASSOCIATED WITH STAIRWELL,MAGNETIC DOOR HOLDERS SHALL RELEASE STAIRWELL DOORS ON BOTH LEVELS ABOVE AND BELOW.
5. UPON ACTIVATION OF SMOKE DETECTORS ASSOCIATED WITH ADJACENT DOOR HOLDERS ONLY THOSE PARTICULAR DOORS SHALL CLOSE.
6. UPON ACTIVATION OF ANY DUCT DETECTOR, ALL AIR HANDLING UNITS AND FAN COIL UNITS IN THE ASSOCIATED SMOKE ZONE ONLY SHALL AUTOMATICALLY SHUT DOWN. UPON ACTIVATION OF ALL OTHER INITIATING DEVICE, ALL AIR HANDLING UNITS AND FAN COIL UNITS SHALL AUTOMATICALLY SHUTDOWN.
7. SEE MECHANICAL DRAWINGS FOR SMOKE DAMPER LOCATIONS.
8. SEE MECHANICAL & ELECTRICAL PLANS FOR QUANTITY OF DUCT DETECTORS. THE CONTRACTOR SHALL NOTIFY THE ENGINEER PRIOR TO BID ANY DISCREPANCIES.
9. PROVIDE TEMPORAL FIRE ALARM EVACUATION TONE, SEE SPECIFICATIONS 283111.

MATRIX - SPRINKLED OFFICE BUILDING 6 STORIES OR LESS

FIRE ALARM SYSTEM INPUT/OUTPUT MATRIX

SYSTEM OUTPUTS — FACP ANNUNCIATION / NOTIFICATION / REQUIRED FIRE SAFETY CONTROL

- A — ACTUATE COMMON ALARM SIGNAL INDICATOR
- B — ACTUATE AUDIBLE FIRE ALARM SIGNAL
- C — ACTUATE AUDIBLE CARBON MONOXIDE ALARM SIGNAL
- D — ACTUATE COMMON SUPERVISORY SIGNAL INDICATOR
- E — ACTUATE AUDIBLE SUPERVISORY SIGNAL
- F — ACTUATE COMMON TROUBLE SIGNAL INDICATOR
- G — ACTUATE AUDIBLE TROUBLE SIGNAL
- H — ACTUATE ZONE OR DEVICE ADDRESS ALARM INDICATOR
- I — ACTUATE GENERAL EVACUATION SIGNAL TEMPORAL 3
- J — DISPLAY CHANGE OF STATUS
- K — TRANSMIT FIRE ALARM SIGNAL TO CENTRAL STATION
- L — TRANSMIT CARBON MONOXIDE SIGNAL TO CENTRAL STATION
- M — TRANSMIT SUPERVISORY SIGNAL TO CENTRAL STATION
- N — TRANSMIT TROUBLE SIGNAL TO CENTRAL STATION
- O — TEMPORAL 4
- P — RELEASE MAGNETICALLY HELD DOORS
- Q — RECALL ELEVATOR TO RECALL FLOOR
- R — RECALL ELEVATOR TO ALTERNATE RECALL FLOOR
- S — ACTUATE WARNING TO ELEVATOR CABS
- T — DELAYED REMOVAL OF POWER FROM ELEVATOR
- U — UNLOCK EXITS AND CONTROL DOORS
- V — SHUT DOWN RESPECTIVE AIR HANDLING EQUIPMENT

	SYSTEM INPUTS	A	B	C	D	E	F	G	H	I	J	K	L	M	N	O	P	Q	R	S	T	U	V	W	X	Y	Z	
1	FIRE ALARM SYSTEM AC POWER FAILURE					●	●						●															1
2	FIRE ALARM SYSTEM LOW BATTERY					●	●						●															2
3	OPEN CIRCUIT					●	●						●															3
4	GROUND FAULT					●	●						●															4
5	NOTIFICATION APPLIANCE CIRCUIT SHORT					●	●						●															5
6	BUILDING MANUAL PULL STATIONS	●	●					●	●	●	●				●					●		●	●					6
7	CORRIDOR SMOKE DETECTORS	●	●					●	●	●	●				●	●				●		●	●					7
8	AREA SMOKE DETECTORS	●	●					●	●	●	●				●	●				●		●	●					8
9	HVAC AIR DUCT SMOKE DETECTORS			●	●			●				●									●	●	●					9
10	SPRINKLER TAMPER SWITCH			●	●			●				●																10
11	SPRINKLER WATER FLOW IN BUILDING	●	●					●	●	●	●				●	●				●								11
12	SPRINKLER WATER FLOW IN ELEV SHAFT	●	●					●	●	●	●				●	●		●	●	●								12
13	ELEV SHAFT AREA SMOKE DETECTOR	●	●					●	●	●	●				●	●		●		●		●	●					13
14	ELEV SHAFT HEAT DETECTORS	●	●					●	●	●	●				●	●		●	●	●		●	●					14
15	ELEV LOBBY SMOKE DETECTORS - UPPER FLOORS	●	●					●	●	●	●				●	●				●		●	●					15
16	ELEV LOBBY SMOKE DETECTOR - RECALL FLOOR	●	●					●	●	●	●				●		●	●		●		●	●					16
17	ELEV CONTROLLER POWER SHUNT TRIP STATUS			●	●			●				●																17
18	CARBON MONIOXIDE									●				●														18
19	-																											19
20	-																											20
21	-																											21
22	-																											22
23	-																											23
24	-																											24
25	-																											25
26	-																											26
27	-																											27
		A	B	C	D	E	F	G	H	I	J	K	L	M	N	O	P	Q	R	S	T	U	V	W	X	Y	Z	

McKIM&CREED
Venture IV, 1730 Varsity Dr #500
Raleigh, NC 27606
919.233.8091 (Voice)
919.233.8031 (Fax)
NC License # F-1222

Designed OWN Drawn OWN
Checked JCA Date 07/20/23
Project No. 05607-0028

THIS DRAWING IS AN INSTRUMENT OF SERVICE. THE DRAWING AND INFORMATION THEREON IS THE PROPERTY OF McKIM & CREED, INC. ANY REPRODUCTION, ALTERATION OR USE FOR OTHER THAN THE INTENDED PROJECT WITHOUT WRITTEN CONSENT OF McKIM & CREED, INC. IS EXPRESSLY FORBIDDEN. COPYRIGHT 2023, McKIM & CREED, INC.

THE KEITH CORPORATION
CAPE FEAR VALLEY HEALTH
HARNETT HEALTH
LS3P

434 FAYETTEVILLE STREET SUITE 1700
RALEIGH, NORTH CAROLINA 27601
TEL. 919.829.2700 FAX. 919.829.2730
WWW.LS3P.COM

NOT FOR CONSTRUCTION
FOR REVIEW PURPOSES ONLY
NORTH CAROLINA PROFESSIONAL ENGINEER JESSE C. ALONZO JR.

COPYRIGHT 2022 ALL RIGHTS RESERVED. PRINTED OR ELECTRONIC DRAWINGS AND DOCUMENTATION MAY NOT BE REPRODUCED IN ANY FORM WITHOUT WRITTEN PERMISSION FROM LS3P ASSOCIATES LTD.

CFVH HARNETT MOB - Tenant Fit-Up

225 Brightwater Drive Lillington, NC 27546

LS3P PROJECT: 8403-225630

Δ	DATE	DESCRIPTION

SHEET NAME: FIRE ALARM DATA SHEET

ORIG SUBMISSION: 06/19/23

SHEET: FAI001

DESIGN DEVELOPMENT

THE LINE SHOWN ABOVE IS EXACTLY ONE INCH LONG AT THIS SHEETS ORIGINAL PAGE SIZE
7/20/2023 7:06:01 PM

THE LINE SHOWN ABOVE IS EXACTLY ONE INCH ON ORIGINAL PAPER SIZE

1 FIRE ALARM FIRST FLOOR PLAN
SCALE: 1/8" = 1'-0"

GENERAL SHEET NOTES:

1. PROVIDE 120V/1P POWER FOR ADDITIONAL FIRE DAMPERS, FIRE/SMOKE DAMPERS.

THE KEITH CORPORATION
CAPE FEAR VALLEY HEALTH
HARNETT HEALTH
LS3P
434 FAYETTEVILLE STREET SUITE 1700
RALEIGH, NORTH CAROLINA 27601
TEL. 919.829.2700 FAX. 919.829.2730
WWW.LS3P.COM

NORTH CAROLINA PROFESSIONAL ENGINEER SEAL
FOR REVIEW PURPOSES ONLY
JESSE C. ALLRED JR.
NOT FOR CONSTRUCTION

COPYRIGHT 2022 ALL RIGHTS RESERVED. PRINTED OR ELECTRONIC DRAWINGS AND DOCUMENTATION MAY NOT BE REPRODUCED IN ANY FORM WITHOUT WRITTEN PERMISSION FROM LS3P ASSOCIATES LTD.

CFVH HARNETT MOB - Tenant Fit-Up

225 Brightwater Drive Lillington, NC 27546

LS3P PROJECT: 8403-225630

Δ	DATE	DESCRIPTION

SHEET NAME:
FIRE ALARM - NEW WORK PLAN - LEVEL 1

ORIG SUBMISSION: 06/19/23

SHEET:
FAI101

DESIGN DEVELOPMENT

7/20/2023 7:06:05 PM

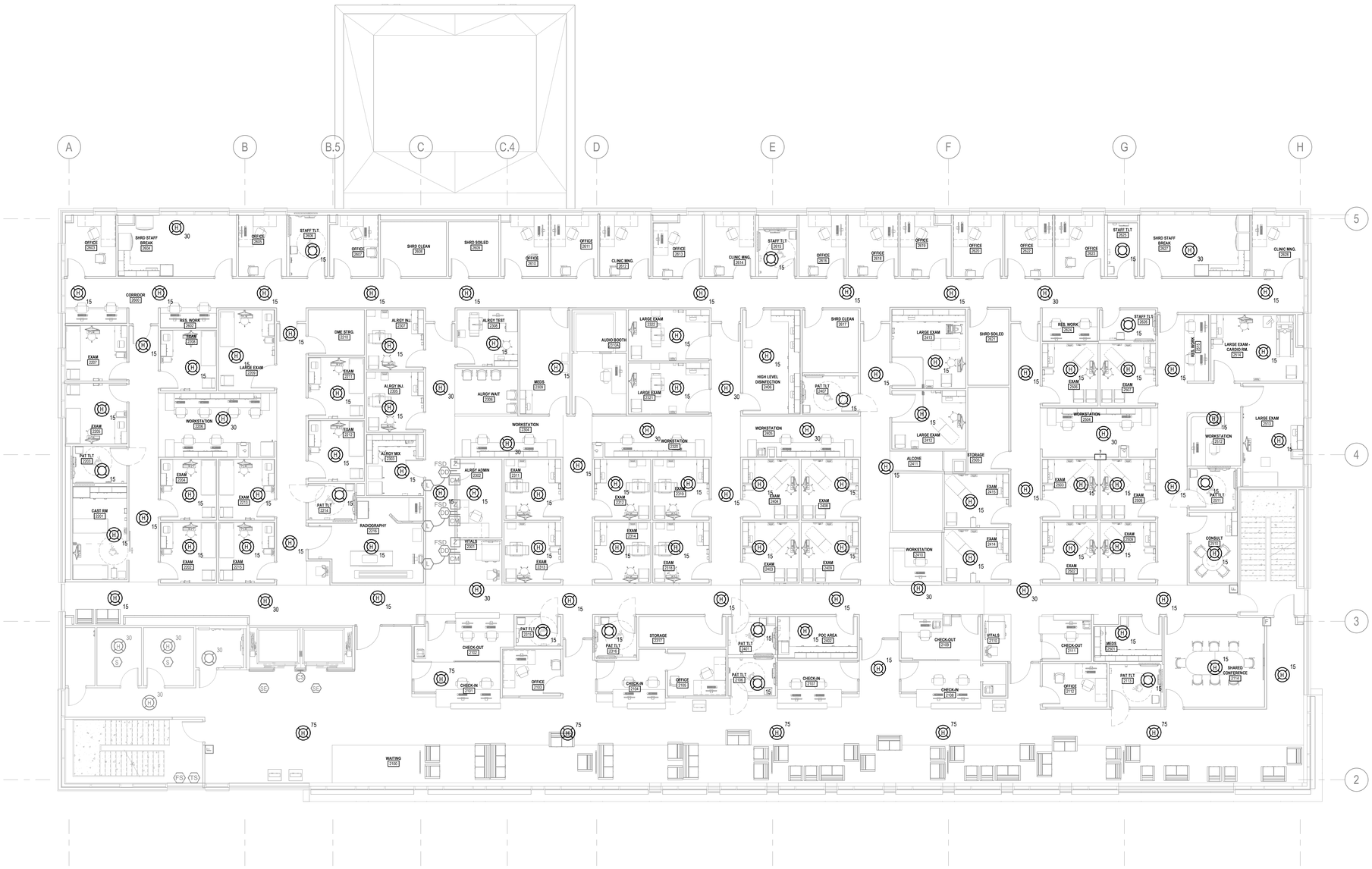

1 FIRE ALARM SECOND FLOOR PLAN
SCALE: 1/8" = 1'-0"

McKIM & CREED
Venture IV, 1730 Varsity Dr #500
Raleigh, NC 27606
919.233.8091 (Voice)
919.233.8031 (Fax)
NC License # F-1222

Designed Designer Drawn Author
Checked Checker Date 07/20/23
Project No. 05607-0026

THIS DRAWING IS AN INSTRUMENT OF SERVICE. THE DRAWING AND INFORMATION THEREON IS THE PROPERTY OF McKIM & CREED, INC. ANY REPRODUCTION, ALTERATION OR USE FOR OTHER THAN THE INTENDED PROJECT WITHOUT WRITTEN CONSENT OF McKIM & CREED, INC. IS EXPRESSLY FORBIDDEN. COPYRIGHT 2023, McKIM & CREED, INC.

THE KEITH CORPORATION

CAPE FEAR VALLEY HEALTH

HARNETT HEALTH

LS3P

434 FAYETTEVILLE STREET SUITE 1700
RALEIGH, NORTH CAROLINA 27601
TEL. 919.829.2700 FAX. 919.829.2730
WWW.LS3P.COM

NOT FOR CONSTRUCTION
FOR REVIEW PURPOSES ONLY
NC ALONZO R.

COPYRIGHT 2022 ALL RIGHTS RESERVED. PRINTED OR ELECTRONIC DRAWINGS AND DOCUMENTATION MAY NOT BE REPRODUCED IN ANY FORM WITHOUT WRITTEN PERMISSION FROM LS3P ASSOCIATES LTD.

CFVH HARNETT MOB - Tenant Fit-Up

225 Brightwater Drive Lillington, NC 27546

LS3P PROJECT: 8403-225630

Δ	DATE	DESCRIPTION

SHEET NAME:
FIRE ALARM - NEW WORK PLAN - LEVEL 2

ORIG SUBMISSION: 06/19/23

SHEET:
FAI102

DESIGN DEVELOPMENT

THE LINE SHOWN ABOVE IS EXACTLY ONE INCH LONG ON ORIGINAL PLOT SHEETS

7/20/2023 7:06:12 PM