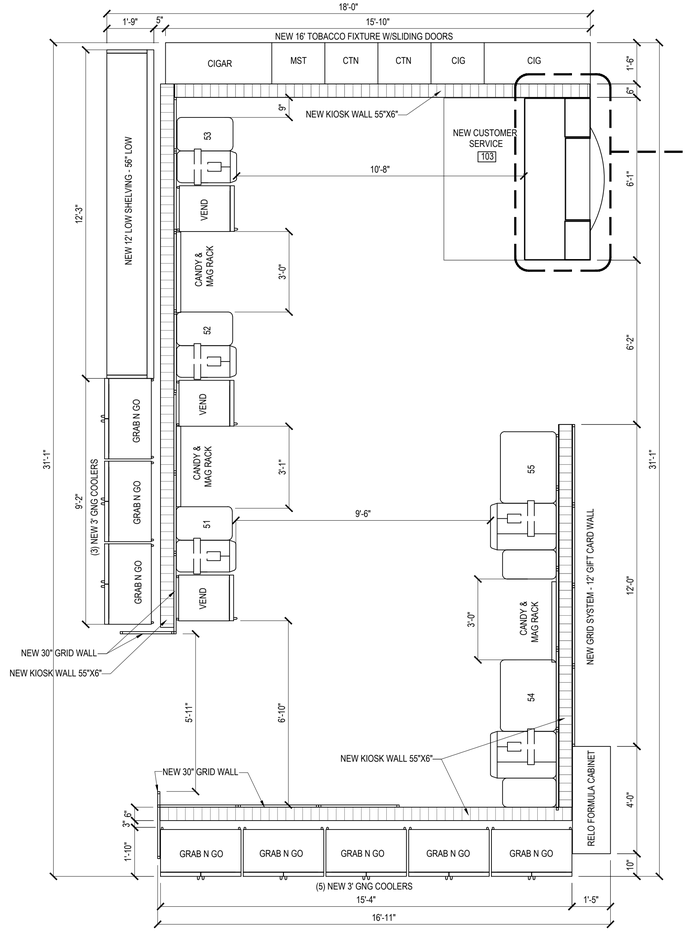

1 A5.01 ENLARGED CUSTOMER SERVICE KIOSK
Scale 3/8"=1'-0"

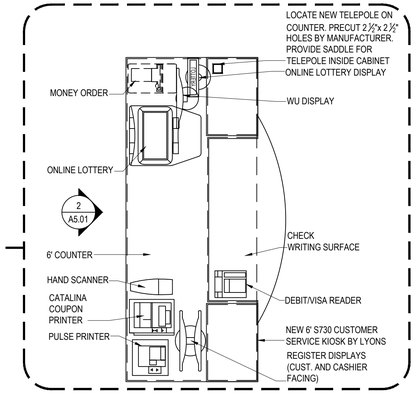

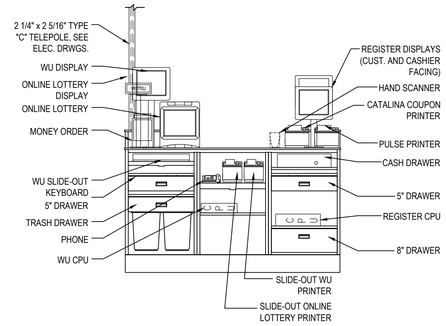

2 A5.01 CUSTOMER SERVICE COUNTER ELEVATION
Scale 1/2"=1'-0"

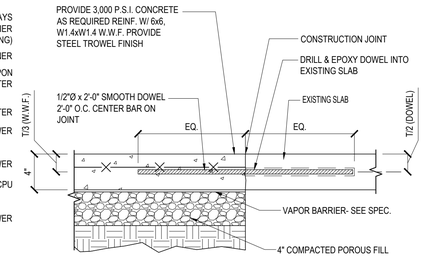

3 A5.01 SLAB JOINT DETAIL - TYP.
SCALE: 1 1/2"=1'-0"

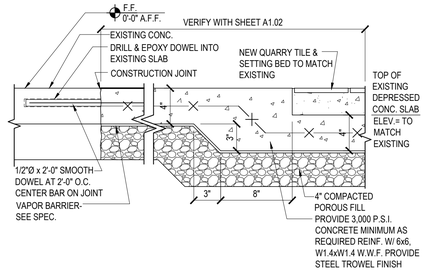

4 A5.01 DEPRESSED SLAB JOINT DETAIL
Scale 1 1/2"=1'-0"

MANUFACTURED BY McCUE CORP. PHONE #	1-800 (800-8503) 1-770 (972-1495)
BOX RAIL CHART	
QUANTITY (3)	8' BOX RAIL MODEL NUMBER (CSB-96)
QUANTITY (1)	LEGS - MODEL NUMBER (CSB-LLK)
QUANTITY (2)	END CAPS MODEL NUMBER (CSBE-00)
QUANTITY (1)	CONNECTORS - MODEL NUMBER (CSBC)
QUANTITY (6)	ANCHORS

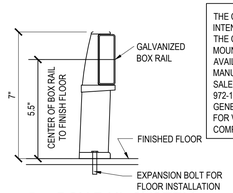

5 A5.01 BOX RAIL SYSTEM
Scale NTS

THE CART BUMPERS IN THE VESTIBULE ARE INTENDED TO PROTECT BOTH THE WALL AND THE CARTS. THE BUMPERS SHOULD BE FLOOR MOUNTED. McCUE BOX RAIL CART BUMPERS ARE AVAILABLE ONLY IN 8 FOOT LENGTHS. MANUFACTURED BY McCUE CORPORATION OF SALEM MA. PHONE # 1-(800) 800-8503, OR 1-(770) 972-1495.
GENERAL CONTRACTOR SHALL BE RESPONSIBLE FOR VERIFYING ALL QUANTITIES OF BOXRAIL COMPONENTS REQUIRED.

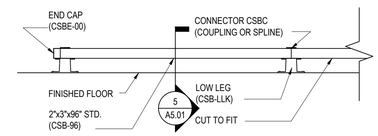

6 A5.01 ELEVATION ELEVATION CART BUMPER SYSTEM
Scale NTS

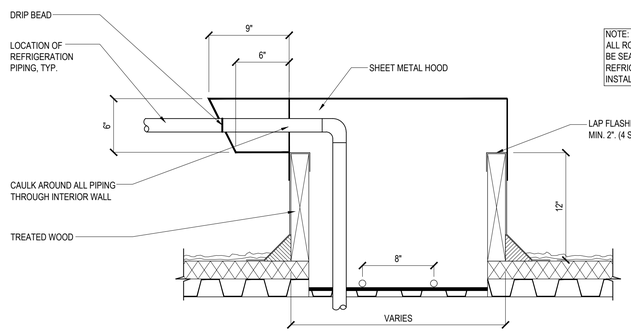

NOTE:
ALL ROOF PENETRATIONS ARE TO BE SEALED BY THE G.C. AFTER REFRIGERATION PIPING HAS BEEN INSTALLED

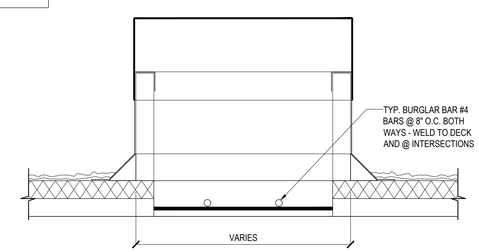

7 A5.01 REFRIGERATION PIPING ACCESS SECTION & ELEVATION
Scale 1 1/2"=1'-0"

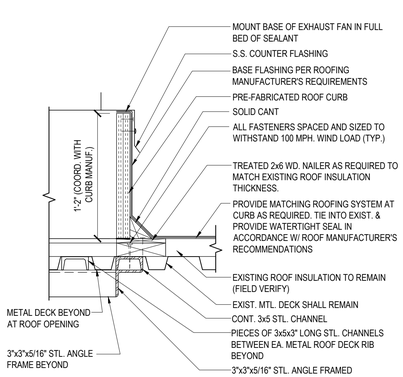

8 A5.01 ROOF CURB DETAIL
Scale 1 1/2"=1'-0"

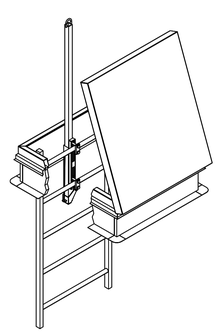

CLAMP BRACKET MAY BE REVERSED TO ACCOMMODATE RUNG SIZES OF 3/4" TO 1 1/4" WITH STANDARD 2" BOLTS FURNISHED. LARGER RUNGS WILL REQUIRE LONGER BOLTS.

NOTE:
SAFETY POST SHALL BE MODEL 1 LADDER UP SAFETY POST BY BILCO OR SIMILAR.

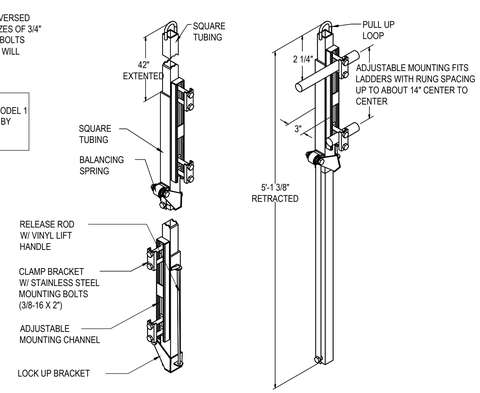

9 A5.01 LADDER UP SAFETY POLE ISOMETRIC
Scale 3/4"=1'-0"

CUHACI PETERSON
2600 Maitland Center Parkway
Suite #200
Maitland, FL 32751
P (407) 661-9100
F (407) 661-9101
c-p.com
Florida Corporate Certificate #AA C000526

COPYRIGHT © 2021 - ALL REPORTS, PLANS, SPECIFICATIONS, COMPUTER FILES, FIELD DATA, NOTES & OTHER DOCUMENTS ARE INSTRUMENTS OF SERVICE PREPARED BY: CUHACI PETERSON, (CP) AS INSTRUMENTS OF SERVICE REMAIN THE PROPERTY OF CP. CP SHALL RETAIN ALL COMMON LAW, STATUTORY, AND OTHER RESERVED RIGHTS, INCLUDING THE COPYRIGHT THERETO. ANY USE OR REPRODUCTION OF THIS DOCUMENT WITHOUT WRITTEN PERMISSION FROM CP IS A VIOLATION OF FEDERAL COPYRIGHT LAWS.

ARCHITECT/ENGINEER SEAL

04/14/2023

This document has been electronically signed and sealed by Marcus Boyle using a Digital Signature. Printed copies of this document are not considered signed and sealed and the signature must be verified on any electronic copies.
2023.04.19 11:32:36-04'00'

NORTH CAROLINA REGISTERED 16078 ARCHITECT MARCUS JAMES BOYLE

MARCUS JAMES BOYLE
NC 16078

CONSULTANT

FOOD LION
2110 EXECUTIVE DRIVE
SALISBURY, NC 28145
PH: 704-633-8250 FX: 704-636-4940

REVISION / ISSUE HISTORY

REV	DATE	REVISION / ISSUE NAME
-	04/14/2023	PERMIT

PROJECT NO	DRAWN BY
2220380	JB
PERMIT SUB DATE	CHECKED BY
04/14/2023	RD

PROJECT
FOOD LION STORE #2594
3260 RAY ROAD
SPRING LAKE, NC 28390
2594FLMK23

CLIENT
FOOD LION
2110 EXECUTIVE DRIVE
SALISBURY, NC 28145
PH: 704-633-8250 F: 704-636-5940

SHEET TITLE
MISCELLANEOUS DETAILS

SHEET NO 2594A5.01_00
A5.01

REV