ACCESSIBILITY NOTES:

1. THE INTERNATIONAL SYMBOL OF ACCESSIBILITY SIGN SHALL BE DISPLAYED AT ALL ACCESSIBLE RESTROOM FACILITIES AND AT ACCESSIBLE BUILDING ENTRANCES UNLESS ALL ENTRANCES ARE ACCESSIBLE. INACCESSIBLE ENTRANCES SHALL HAVE DIRECTIONAL SIGNS INDICATING THE ROUTE TO THE NEAREST ACCESSIBLE ENTRANCE.
2. ACCESSIBLE DRINKING FOUNTAINS SHALL HAVE A SPOUT HEIGHT NO HIGHER THAN 36 INCHES ABOVE THE FLOOR AND EDGE OF BASIN NO HIGHER THAN 34 INCHES ABOVE THE FLOOR FOR INDIVIDUALS IN WHEELCHAIRS. ADDITIONALLY, DRINKING WATER PROVISIONS SHALL BE MADE FOR INDIVIDUALS WHO HAVE DIFFICULTY BENDING.
3. WHERE STORAGE FACILITIES SUCH AS CABINETS, SHELVES, CLOSETS AND DRAWERS ARE PROVIDED AT LEAST ONE TYPE PROVIDED SHALL CONTAIN STORAGE SPACE COMPLYING WITH THE FOLLOWING: DOORS ETC. TO SUCH SPACES SHALL BE ACCESSIBLE (I.E. TOUCH LATCHES, U-SHAPED PULLS). SPACES SHALL BE 15 INCHES MINIMUM AND 48 INCHES MAXIMUM ABOVE THE FLOOR FOR FORWARD REACH OR SIDE REACH. CLOTHES RODS OR COAT HOOKS SHALL BE A MAXIMUM OF 48 INCHES ABOVE THE FLOOR (46 INCHES MAXIMUM WHEN DISTANCE FROM WHEEL CHAIR TO ROD EXCEEDS 10 INCHES). SHELVES IN KITCHENS OR TOILET ROOMS SHALL BE 48 INCHES MAXIMUM AND 48 INCHES MAXIMUM ABOVE IN FLOOR.
4. CONTROLS, DISPENSERS, RECEPTACLES AND OTHER OPERABLE EQUIPMENT SHALL BE NO HIGHER THAN 48 INCHES ABOVE THE FLOOR. RECEPTACLES ON WALLS SHALL BE MOUNTED NO LESS THAN 15 INCHES ABOVE THE FLOOR. EXCEPTION: HEIGHT LIMITATIONS DO NOT APPLY WHERE THE USE OF SPECIAL EQUIPMENT DICTATES OTHERWISE OR WHERE ELECTRICAL RECEPTACLES ARE NOT NORMALLY INTENDED FOR USE BY BUILDING OCCUPANTS.
5. WHERE EMERGENCY WARNING SYSTEMS ARE PROVIDED, THEY SHALL INCLUDE BOTH AUDIBLE AND VISUAL ALARMS. THE VISUAL ALARMS SHALL BE LOCATED THROUGHOUT, INCLUDING RESTROOM, AND PLACED 80 INCHES ABOVE THE FLOOR OR 6 INCHES BELOW CEILING, WHICHEVER IS LOWER.
6. ALL DOORS SHALL BE OPERABLE BY A SINGLE EFFORT. DOOR CLOSERS SHALL BE ADJUSTED SO THAT FROM AN OPEN POSITION OF 90 DEGREES, THE TIME REQUIRED TO MOVE THE DOOR TO AN OPEN POSITION OF 12 DEGREES SHALL BE 5 SECONDS MINIMUM. THE MAXIMUM FORCE REQUIRED FOR PUSHING OR PULLING OPEN DOORS OTHER THAN FIRE DOORS SHALL NOT EXCEED 5 LBS. FOR ALL SLIDING, FOLDING, AND INTERIOR HINGED DOORS.
7. FLOOR SURFACES SHALL BE STABLE, FIRM, AND SLIP-RESISTANT. CHANGES IN LEVEL BETWEEN 0.25 INCH AND 0.5 INCH SHALL BE BEVELED WITH A SLOPE NO GREATER THAN 1:2. CHANGES IN LEVEL GREATER THAN 0.5 INCH REQUIRE RAMPS. CARPET PILE THICKNESS SHALL BE 0.5 MAX. GRATINGS IN FLOOR SHALL HAVE SPACES NO GREATER THAN 0.5 INCH WIDE IN ONE DIRECTION. DOORWAY THRESHOLDS SHALL NOT EXCEED 0.5 INCH IN HEIGHT.
8. ACCESSIBLE WATER CLOSETS SHALL BE 17 INCHES TO 19 INCHES, MEASURED FROM THE FLOOR TO THE TOP OF THE SEAT. GRAB BARS SHALL BE 36 INCHES LONG MINIMUM WHEN LOCATED BEHIND WATER CLOSET AND 42 INCHES MINIMUM WHEN LOCATED ALONG SIDE OF WATER CLOSET, AND SHALL BE MOUNTED 33 INCHES TO 36 INCHES ABOVE THE FLOOR. IN ADDITION, A VERTICAL GRAB BAR 18 INCHES MINIMUM IN LENGTH SHALL BE MOUNTED ON THE SIDEWALL WITH THE BOTTOM OF THE BAR LOCATED BETWEEN 39 AND 41 INCHES ABOVE THE FLOOR, AND WITH THE CENTER LINE OF THE BAR LOCATED BETWEEN 39 INCHES AND 41 INCHES FROM THE REAR WALL.
9. ACCESSIBLE URINALS SHALL BE STALL-TYPE OR WALL HUNG WITH ELONGATED RIMS AT A MAXIMUM OF 17 INCHES ABOVE THE FLOOR.
10. ACCESSIBLE LAVATORIES AND SINKS SHALL BE MOUNTED WITH THE RIM NO HIGHER THAN 34 INCHES ABOVE THE FLOOR. KNEE CLEARANCE OF AT LEAST 27 INCHES HIGH MUST BE PROVIDED WITH A MINIMUM DEPTH OF 8 INCHES BENEATH THE FIXTURE, AND 9 INCHES HIGH MINIMUM WITH A MINIMUM DEPTH OF 11 INCHES BENEATH THE FIXTURE. THE KNEE SPACE MUST BE AT LEAST 30 INCHES WIDE.
11. HOT WATER AND DRAIN PIPES UNDER ACCESSIBLE LAVATORIES AND SINKS SHALL BE INSULATED OR OTHERWISE CONFIGURED TO PROTECT AGAINST CONTACT. INSULATION OR PROTECTION MATERIALS MAY BE SITE INSTALLED. THERE SHALL BE NO SHARP OR ABRASIVE SURFACES UNDER ACCESSIBLE LAVATORIES AND SINKS.
12. MIRRORS LOCATED ABOVE LAVATORIES, SINKS OR COUNTERS SHALL BE MOUNTED WITH THE BOTTOM EDGE OF THE REFLECTING SURFACE A MAXIMUM OF 40 INCHES ABOVE THE FLOOR. OTHER MIRRORS IN TOILET ROOMS SHALL BE MOUNTED WITH THE BOTTOM EDGE OF THE REFLECTING SURFACE 35 INCHES MAXIMUM ABOVE THE FLOOR.
13. GRAB BARS HAVING A CIRCULAR CROSS SECTION SHALL HAVE AN OUTSIDE DIAMETER OF 1.25 INCHES MINIMUM AND 2.0 INCHES MAXIMUM. THE SPACE BETWEEN THE GRAB BAR AND THE WALL SHALL BE 1.5 INCHES.
14. WATER CLOSET FLUSH CONTROL SHALL BE INSTALLED A MAXIMUM OF 36 INCHES ABOVE THE FLOOR AND SHALL BE LOCATED ON THE OPEN SIDE OF THE WATER CLOSET.
15. DOORS TO ALL ACCESSIBLE SPACES SHALL HAVE ACCESSIBLE HARDWARE (I.E. LEVER-OPERATED, PUSHTYPE, U-SHAPED) MOUNTED WITH OPERABLE PARTS BETWEEN 34 INCHES MINIMUM AND 48 INCHES MAXIMUM ABOVE THE FLOOR.
16. TOILET STALL DOORS SHALL BE THE SELF-CLOSING TYPE.
17. A TOWEL DISPENSER SHALL BE LOCATED ADJACENT TO ALL ACCESSIBLE LAVATORIES.

GENERAL NOTES:

1. ACCESS TO BUILDING FOR PERSONS IN WHEELCHAIRS IS DESIGNED BY AND FIELD BUILT BY OTHERS AND SUBJECT TO LOCAL JURISDICTION APPROVAL. THE PRIMARY ENTRANCE MUST BE ACCESSIBLE.
2. ALL DOORS SHALL BE OPENABLE FROM THE EGRESS SIDE WITHOUT THE USE OF A KEY, TOOL, SPECIAL KNOWLEDGE OR EFFORT. MANUALLY OPERATED FLUSH BOLTS OR SURFACE BOLTS SHALL NOT BE USED.
3. ALL GLAZING WITHIN A 24 INCH ARC OF DOORS, WHOSE BOTTOM EDGE IS LESS THAN 60 INCHES ABOVE THE FLOOR, AND ALL GLAZING IN DOORS SHALL BE SAFETY, TEMPERED OR ACRYLIC PLASTIC SHEET.
4. ALL STEEL STRAPS REFERENCED ON FLOOR PLAN SHALL BE 1.5 INCH x 25 GA. WITH 7 – 15 GA. x 7/16 INCH CROWN x 1 INCH STAPLES EACH END OF STRAP OR EQUIVALENT FROM RIDGE BEAM TO COLUMN, AND COLUMN TO FLOOR.
5. PORTABLE FIRE EXTINGUISHER PER N.F.P.A. – 10 INSTALLED BY OTHERS ON SITE, AND SUBJECT TO LOCAL JURISDICTION.
6. PROVISIONS FOR EXIT DISCHARGE LIGHTING ARE THE RESPONSIBILITY OF THE BUILDING OWNER AND SUBJECT TO LOCAL JURISDICTION APPROVAL WHEN NOT SHOWN ON THE FLOOR PLAN (INCLUDING EMERGENCY LIGHTING, WHEN REQUIRED).
7. WHEN LOW SIDES OF ROOF PROVIDE LESS THAN 6" OF OVERHANG, GUTTERS AND DOWN SPOUTS SHALL BE SITE INSTALLED, DESIGNED BY OTHERS, SUBJECT TO LOCAL JURISDICTION APPROVAL.
8. IN WIND-BORNE-DEBRIS REGIONS, GLAZING SHALL BE IMPACT RESISTANT OR PROTECTED WITH AN IMPACT RESISTANT COVERING MEETING THE REQUIREMENTS OF AN APPROVED IMPACT RESISTANT STANDARD, OR ASTM E1996. WIND-BORNE-DEBRIS REGIONS ARE DESIGNATED IN SECTION 1609 OF THE IBC.
9. FIRE SAFETY PLAN REVIEW AND INSPECTION IS RESERVED FOR THE LOCAL AUTHORITY HAVING JURISDICTION.
10. WINDOWS AND DOORS MUST BE CERTIFIED FOR COMPLIANCE WITH THE WIND DESIGN PRESSURE FOR COMPONENTS AND CLADDING.
11. STRUCTURAL DETAILS NOT INCLUDED IN THIS PLAN SET ARE TO BE CONSTRUCTED ACCORDING TO THE MANUFACTURERS STATE APPROVED BUILDING SYSTEM MANUAL.

MECHANICAL NOTES:

1. ALL SUPPLY AIR REGISTERS SHALL BE 10 INCHES x 10 INCHES ADJUSTABLE WITH 10 INCHES x 20 INCHES (INSIDE) OVERHEAD FIBERGLASS DUCT, UNLESS OTHERWISE SPECIFIED. DUCTS IN UNCONDITIONED SPACES SHALL HAVE R–6 MINIMUM INSULATION EXCEPT DUCTS EXPOSED TO VENTILATED ATTICS AND CRAWL SPACES SHALL HAVE R–8 INSULATION.
2. INTERIOR DOORS SHALL BE UNDERCUT 1.5 INCHES ABOVE FINISHED FLOOR FOR AIR RETURN AND/OR AS NOTED ON FLOOR PLAN.
3. HVAC EQUIPMENT SHALL BE EQUIPPED WITH OUTSIDE FRESH AIR INTAKES PROVIDING 5 CFM FOR EACH OCCUPANT AND 0.06 AREA–OUTDOOR RATE PER IMC SECTION 403.
4. RESTROOM VENT FANS SHALL PROVIDE 75 CFM OR MORE EXHAUST PER WATER CLOSET OR URINAL.
5. RESTROOM VENT FANS SHALL BE DUCTED DIRECTLY TO EXTERIOR OF BUILDING.
6. PERMISSABLE TYPE OF GAS FOR APPLIANCES–NONE (ALL ELECTRIC)

ELECTRICAL NOTES:

1. ALL CIRCUITS AND EQUIPMENT SHALL BE GROUNDED IN ACCORDANCE WITH THE APPROPRIATE ARTICLES OF THE NATIONAL ELECTRICAL CODE (NEC).
2. WHEN LIGHT FIXTURES ARE INSTALLED IN "CLOSET STORAGE SPACE" THEY SHALL BE SURFACE MOUNTED OR RECESSED. INCANDESCENT FIXTURES INCANDESCENT FIXTURES SHALL HAVE COMPLETELY ENCLOSED LAMPS. SURFACE MOUNTED INCANDESCENT FIXTURES SHALL HAVE A MINIMUM CLEARANCE OF 12 INCHES AND ALL OTHER FIXTURES SHALL HAVE A MINIMUM CLEARANCE OF 6 INCHES FROM "CLOSET STORAGE SPACE" AS DEFINED BY NEC 410.2
3. WHEN WATER HEATERS ARE INSTALLED THEY SHALL BE PROVIDED WITH READILY ACCESSIBLE DISCONNECTS ADJACENT TO THE WATER HEATERS SERVED. THE BRANCH CIRCUIT SWITCH OR CIRCUIT BREAKER SHALL BE PERMITTED TO SERVE AS THE DISCONNECTING MEANS ONLY WHERE THE SWITCH OR CIRCUIT BREAKER IS WITHIN SIGHT FROM THE WATER HEATER OR IS CAPABLE OF BEING LOCKED IN THE OPEN POSITION.
4. HVAC EQUIPMENT SHALL BE PROVIDED WITH READILY ACCESSIBLE DISCONNECTS ADJACENT TO THE EQUIPMENT SERVED. A UNIT SWITCH WITH A MARKED "OFF" POSITION THAT IS A PART OF THE HVAC EQUIPMENT AND DISCONNECTS ALL UNGROUNDED CONDUCTORS SHALL BE PERMITTED AS THE DISCONNECTING MEANS WHERE OTHER DISCONNECTING MEANS ARE ALSO PROVIDED BY A READILY ACCESSIBLE CIRCUIT BREAKER.
5. PRIOR TO ENERGIZING THE ELECTRICAL SYSTEM THE INTERRUPTING RATING OF THE MAIN BREAKER MUST BE DESIGNED AND VERIFIED AS BEING IN COMPLIANCE WITH ARTICLES 110.9 & 110.10 THE NEC BY LOCAL ELECTRICAL CONSULTANT.
6. THE MAIN ELECTRICAL PANEL AND FEEDERS ARE DESIGNED BY OTHERS, SITE INSTALLED AND SUBJECT TO LOCAL JURISDICTION APPROVAL.
7. ALL CIRCUITS CROSSING OVER MODULE MATING LINE(S) SHALL BE SITE CONNECTED WITH APPROVED ACCESSIBLE JUNCTION BOXES, OR CABLE CONNECTORS.
8. ALL RECEPTACLES INSTALLED IN WET LOCATIONS (EXTERIOR) SHALL BE IN WEATHER PROOF (WP) ENCLOSURES. THE INTEGRITY OF WHICH IS NOT AFFECTED WHEN AN ATTACHMENT PLUG CAP IS INSERTED OR REMOVED. THE RECEPT ITSELF SHALL ALSO BE LISTED FOR DAMP AND WET LOCATIONS.

NC CLIMATE DESIGN CRITERIA:

CLIMATE ZONE: 4a

PLUMBING NOTES:

1. TOILETS SHALL BE ELONGATED WITH NONABSORBENT OPEN FRONT SEATS.
2. REST ROOM WALLS SHALL BE COVERED WITH NONABSORBENT MATERIAL TO A MINIMUM HEIGHT OF 48 INCHES A.F.F. FLOORS SHALL HAVE SMOOTH, HARD, NONABSORBENT SURFACE THAT EXTENDS UPWARD ONTO THE WALLS AT LEAST 6 INCHES.
3. THIS UNIT MUST BE CONNECTED TO A PUBLIC WATER SUPPLY AND SEWER SYSTEM IF THESE ARE AVAILABLE.
4. ALL PLUMBING FIXTURES SHALL HAVE SEPARATE SHUTOFF VALVES.
5. WATER HEATER SHALL HAVE SAFETY PAN WITH 1 INCH DRAIN TO EXTERIOR, T&P RELIEF VALVE WITH DRAIN TO EXTERIOR, AND A SHUT OFF VALVE WITHIN 3 FEET ON A COLD WATER SUPPLY LINE.
6. DWV SYSTEM SHALL BE EITHER ABS OR PVC – DWV.
7. WATER SUPPLY LINES SHALL BE CPVC, OR COPPER, AND SHALL BE INSTALLED IN ACCORDANCE WITH THE MANUFACTURERS LIMITATIONS AND INSTRUCTIONS.
8. WATER CLOSETS ARE TANK TYPE AND URINALS ARE FLUSH TANK TYPE UNLESS OTHERWISE SPECIFIED.
9. BUILDING DRAIN AND CLEANOUTS ARE DESIGNED AND SITE INSTALLED BY OTHERS, SUBJECT TO LOCAL JURISDICTION APPROVAL.
10. SHOWERS SHALL BE CONTROLLED BY AN APPROVED MIXING VALVE WITH A MAXIMUM WATER OUTLET TEMPERATURE OF 120°F (48.9°C).
11. THERMAL EXPANSION DEVICE, IF REQUIRED BY WATER HEATER INSTALLED, AND IF NOT SHOWN ON PLUMBING PLAN, IS DESIGNED AND SITE INSTALLED BY OTHERS, SUBJECT TO LOCAL APPROVAL.
12. WATER PIPES INSTALLED IN A WALL EXPOSED TO THE EXTERIOR SHALL BE LOCATED ON THE HEATED SIDE OF THE WALL INSULATION. WATER PIPING INSTALLED IN AN UNCONDITIONED ATTIC SHALL BE INSULATED WITH AN INSULATION OF R–6.5 MINIMUM.
13. PIPING IN UNCONDITIONED SPACES MUST BE PROTECTED WITH INSULATION HAVING A MINIMUM R FACTOR OF 6.5 IN ACCORDANCE WITH SECTION 305.6.
14. THE USE OF THIS BUILDING WITHOUT THE MINIMUM NUMBER OF REQUIRED PLUMBING FIXTURES IS SUBJECT TO APPROVAL BY THE AUTHORITY HAVING JURISDICTION.
15. THE WATER HEATER SHALL HAVE CONTROLS TO ALLOW A SET POINT OF 90 DEGREES F. THE OUTLET TEMPERATURE OF LAVATORIES SHALL BE LIMITED TO 110 DEGREES F.
16. WATER HEATER SHALL BE PLUMBED WITH HEAT TRAPS ON THE SUPPLY AND DISCHARGE PIPING CONNECTED TO THE HEATER.
17. THE FIRST 8 FEET OF HOT WATER PIPING FROM THE WATER HEATER SHALL BE INSULATED WITH 0.5 INCH OF MATERIAL HAVING A CONDUCTIVITY NOT EXCEEDING 0.27 BTU PER INCH / h x ft x F.
18. TEMPERED WATER MUST BE DELIVERED THROUGH AN APPROVED WATER TEMPERATURE LIMITING DEVICE THAT CONFORMS TO ASSE 1070 OR CSA B125.3.

NC STRUCTURAL LOAD LIMITATIONS

BUILDING RISK CATEGORY: II

FLOOR LIVE LOAD:
A. 50 PSF
B. 2000 LB. CONCENTRATED LOAD OVER 30 INCH x 30 INCH AREA LOCATED ANYWHERE ON FLOOR

ROOF LIVE LOAD:
A. 20 PSF

ROOF SNOW LOAD:
A. Pg = 40 PSF GROUND SNOW LOAD
B. Pf = 30.8 PSF FLAT ROOF SNOW LOAD
C. Ce = 1.0 SNOW EXPOSURE FACTOR
D. Is = 1.0 SNOW IMPORTANCE FACTOR
E. Ct = 1.1 SNOW THERMAL FACTOR

WIND LOAD: ASCE 7–10
A. ULTIMATE WIND SPEED (3–SEC GUST): Vult=140 MPH
B. NOMINAL WIND SPEED (3–SEC GUST): Vasd=109 MPH
C. RISK CATEGORY II
D. WIND EXPOSURE CATEGORY: EXP.=C
E. INTERNAL PRESSURE COEFFICIENT: GCpi=0.18
F. COMPONENT & CLADDING ULTIMATE DESIGN PRESSURES (NOMINAL DESIGN PRESSURE) FOR ROOF ANGLES 0 TO 7 DEGREES:
WALL ZONE 5:Pult=+/–57.1 PSF (Pasd=+/–34.3 PSF)
WALL ZONE 4:Pult=+/–46.2 PSF (Pasd=+/–27.7 PSF)
ROOF ZONE 3:Pult=–107.7 PSF (Pasd=–64.6 PSF)
ROOF ZONE 2:Pult=–71.6 PSF (Pasd=–43.0 PSF)
ROOF ZONE 1:Pult=–42.7 PSF (Pasd=–25.6 PSF)

SEISMIC LOAD:
A. I_E = 1.0 SEISMIC IMPORTANCE FACTOR
B. D SITE CLASS
C. A13 SEISMIC FORCE RESISTING SYSTEM.
D. C SEISMIC DESIGN CATEGORY
E. EQUIVALENT LATERAL FORCE ANALYSIS PROCEDURE
F. Ss = ≤ .537 MAPPED SPECTRAL RESPONSE COEF.
G. S1 = ≤ .288 MAPPED SPECTRAL RESPONSE COEF.
H. Sds = ≤ .49 SPECTRAL RESPONSE COEFFICIENT
I. Sd1 = ≤ .034 SPECTRAL RESPONSE COEFFICIENT
J. V = 2922 LB DESIGN BASE SHEAR
K. R = 6.5 RESPONSE MODIFICATION COEFFICIENT
L. C_s = 0.08 SEISMIC RESPONSE COEFFICIENT

FLOOD LOAD:
THE MODULAR BUILDING UNITS ARE NOT DESIGNED TO BE [illegible] FOR FLOOD LOADS.

PA/VA/OK/GA STRUCTURAL LOAD LIMITATIONS

BUILDING RISK CATEGORY: II

FLOOR LIVE LOAD:
A. 50 PSF
B. 2000 LB. CONCENTRATED LOAD OVER 30 INCH x 30 INCH AREA LOCATED ANYWHERE ON FLOOR

ROOF LIVE LOAD:
A. 20 PSF

ROOF SNOW LOAD:
A. Pg = 40 PSF GROUND SNOW LOAD
B. Pf = 30.8 PSF FLAT ROOF SNOW LOAD
C. Ce = 1.0 SNOW EXPOSURE FACTOR
D. Is = 1.0 SNOW IMPORTANCE FACTOR
E. Ct = 1.1 SNOW THERMAL FACTOR

WIND LOAD: ASCE 7–16
A. ULTIMATE WIND SPEED (3–SEC GUST): V=140 MPH
B. ASD WIND SPEED (3–SEC GUST): Vasd=108 MPH
C. RISK CATEGORY II
D. WIND EXPOSURE CATEGORY: EXP.=C
E. INTERNAL PRESSURE COEFFICIENT: GCpi=0.18
F. COMPONENT & CLADDING ULTIMATE DESIGN PRESSURES (ASD DESIGN PRESSURE) FOR ROOF ANGLES 0 TO 7 DEGREES:
WALL ZONE 5:P=+/–57.1 PSF (Pasd=+/–34.3 PSF)
WALL ZONE 4:P=+/–46.2 PSF (Pasd=+/–27.7 PSF)
ROOF ZONE 3:P=–122.3 PSF (Pasd=–73.3 PSF)
ROOF ZONE 3:P=–88.7 PSF (Pasd=–53.3 PSF)
ROOF ZONE 1:P=–68.0 PSF (Pasd=–40.8 PSF)
ROOF ZONE 1':P=–38.1 PSF (Pasd=–23.3 PSF)

SEISMIC LOAD:
A. I_E = 1.0 SEISMIC IMPORTANCE FACTOR
B. D SITE CLASS
C. A13 SEISMIC FORCE RESISTING SYSTEM.
D. C SEISMIC DESIGN CATEGORY
E. EQUIVALENT LATERAL FORCE ANALYSIS PROCEDURE
F. Ss = ≤ .537 MAPPED SPECTRAL RESPONSE COEF.
G. S1 = ≤ .288 MAPPED SPECTRAL RESPONSE COEF.
H. Sds = ≤ .49 SPECTRAL RESPONSE COEFFICIENT
I. Sd1 = ≤ .034 SPECTRAL RESPONSE COEFFICIENT
J. V = 2922 LB DESIGN BASE SHEAR
K. R = 6.5 RESPONSE MODIFICATION COEFFICIENT
L. C_s = 0.08 SEISMIC RESPONSE COEFFICIENT

FLOOD LOAD:
THE MODULAR BUILDING UNITS ARE NOT DESIGNED TO BE [illegible] FOR FLOOD LOADS.

ROOF RAIN LOAD (IPC APPENDIX B):
A. RAIN INTENSITY: i=4.2 INCHES/HOUR

BUILDING DESIGN PARAMETERS

1. USE/OCCUPANCY: BUSINESS
2. CONSTRUCTION TYPE: VB
3. SPRINKLER SYSTEM: NO
4. BUILDING AREA: 1307 S.F.
5. BUILDING HEIGHT: ≤ 15 FEET
6. NUMBER OF STORIES: 1
7. NUMBER OF MODULES: 2
8. OCCUPANT LOAD 14 BASED ON 100 SF/PERSON
9. EXTERIOR WALL FIRE RATING: NOT RATED
10. THIS BUILDING MUST BE INSTALLED WITH THE FIRE SEPARATION DISTANCES REQUIRED BY IBC TABLE 602 AND SECTION 705.3.
11. ENERGY CODE COMPLIANCE: SEE ATTACHED ENERGY CALCULATIONS.
12. MANUFACTURERS DATA PLATE, STATE LABELS AND 3RD PARTY LABELS ARE TO BE LOCATED ADJACENT TO ELECTRICAL PANEL.

BUILDING DESIGN PARAMETERS

1. USE/OCCUPANCY: BUSINESS
2. CONSTRUCTION TYPE: VB
3. SPRINKLER SYSTEM: NO
4. BUILDING AREA: 1307 S.F.
5. BUILDING HEIGHT: ≤ 15 FEET
6. NUMBER OF STORIES: 1
7. NUMBER OF MODULES: 2
8. OCCUPANT LOAD 9 BASED ON 150 SF/PERSON
9. EXTERIOR WALL FIRE RATING: NOT RATED
10. THIS BUILDING MUST BE INSTALLED WITH THE FIRE SEPARATION DISTANCES REQUIRED BY IBC TABLE 602 AND SECTION 705.3.
11. ENERGY CODE COMPLIANCE: SEE ATTACHED ENERGY CALCULATIONS.
12. MANUFACTURERS DATA PLATE, STATE LABELS AND 3RD PARTY LABELS ARE TO BE LOCATED ADJACENT TO ELECTRICAL PANEL.

ATTENTION LOCAL INSPECTIONS DEPARTMENT

SITE INSTALLED ITEMS

THE FOLLOWING ITEMS HAVE NOT BEEN COMPLETED BY THE MANUFACTURER, HAVE NOT BEEN INSPECTED BY 3rd PARTY AND ARE NOT CERTIFIED BY THE STATE MODULAR LABEL. NOTE THAT THIS LIST DOES NOT NECESSARILY LIMIT THE ITEMS OF WORK AND MATERIAL THAT MAY BE REQUIRED FOR A COMPLETE INSTALLATION. ALL SITE RELATED ITEMS ARE SUBJECT TO LOCAL JURISDICTION APPROVAL. CODE COMPLIANCE MUST BE DETERMINED AT THE LOCAL LEVEL.

1. THE COMPLETE FOUNDATION SUPPORT AND TIE DOWN SYSTEM.
2. RAMPS, STAIRS AND GENERAL ACCESS TO THE BUILDING.
3. PORTABLE FIRE EXTINGUISHER(S).
4. DRINKING FOUNTAIN OR BOTTLED WATER, BUILDING DRAINS, CLEANOUTS, SERVICE SINK AND HOOK–UP TO PLUMBING SYSTEM.
5. ELECTRICAL SERVICE HOOK–UP (INCLUDING FEEDERS) TO THE BUILDING.
6. THE MAIN ELECTRICAL PANEL AND SUB–FEEDERS
7. CONNECTION OF ELECTRICAL CIRCUITS CROSSING OVER MODULE MATELINE(S) – (MULTI–UNITS ONLY).
8. STRUCTURAL AND AESTHETIC INTERCONNECTIONS BETWEEN MODULES (MULTI–UNITS ONLY).
9. EXIT DISCHARGE LIGHTING (INCLUDING EMERGENCY)
10. EMERGENCY LIGHTING FOR EXT. DISTRIBUTION PANELS (AS REQUIRED BY LOCAL AUTHORITY HAVING JURISDICTION)
11. WINDOW AND DOOR HIGH WIND STORM COVERINGS (PER CODE) REFER TO GENERAL NOTES 3, 8 & 10.
12. A SITE SPECIFIC FOUNDATION SHALL BE DESIGNED BY A LICENSED ENGINEER FOR EACH LOCATION THAT THE BUILDING WILL BE INSTALLED. THIS FOUNDATION PLAN IS PROVIDED FOR REFERENCE. MIN REQUIRED SUPPORT LOCATIONS AND MINIMUM GRAVITY LOADS AT THOSE SUPPORT LOCATIONS ARE SPECIFIED ON THIS REFERENCE PLAN. THE ENGINEER OF THE MODULAR BUILDING PLANS SHALL NOT BE HELD RESPONSIBLE FOR THE FOUNDATION DESIGN AND/OR STRUCTURAL COMPONENTS.

N.C. INSTALLATION INSTRUCTIONS

ATTENTION LOCAL INSPECTIONS DEPARTMENT

REFER TO THE FOLLOWING SECTIONS OF THE PLAN SET AND INSTALLATION FOR IMPORTANT INFORMATION CONCERNING THE INSTALLATION OF THE MODULAR BUILDING.

1. BUILDING TIE DOWN AND ANCHORAGE REQUIREMENTS ARE AS INDICATED ON FOUNDATION PLAN.
2. ELECTRICAL INTERCONNECTIONS BETWEEN BUILDING MODULES SHALL BE PER PAGES 2 AND 3 OF THE INSTALLATION INSTRUCTIONS (IF APPLICABLE).
3. MECHANICAL INTERCONNECTIONS BETWEEN BUILDING MODULES SHALL BE PER PAGES 3 AND 4 OF THE INSTALLATION INSTRUCTIONS (IF APPLICABLE).
4. PLUMBING INTERCONNECTIONS BETWEEN BUILDING MODULES SHALL BE PER PAGE 3 OF THE INSTALLATION INSTRUCTIONS (IF APPLICABLE).
5. FIRE BLOCKING SHALL BE PROVIDED PER SECTION 716.2 AND 1406.2.4 OF THE N.C. BUILDING CODE (AS APPLICABLE).
6. AIR INFILTRATION AT MODULE MATE LINES SHALL BE LIMITED BY INSTALLING SILL TAPE ALONG THE MATE LINES DURING SET UP AND/OR BY INSTALLING CONTINUOUS SHEATHING ACROSS THE MATE LINE JOINTS AFTER SET UP.

WINDOW & DOOR SPECIFICATIONS

1. DBL. PANE WINDOWS ARE REQUIRED FOR ALL CLIMATE ZONES. SEE THE COMCHECK ENERGY CALCULATIONS FOR THE MAXIMUM ALLOWED U–FACTOR AND SHGC.
2. THE MAXIMUM ALLOWABLE AIR LEAKAGE RATE FOR WINDOWS IS 0.3 CFM PER SQUARE FEET OF WINDOW AREA.
3. THE MAXIMUM ALLOWABLE AIR LEAKAGE RATE FOR EXTERIOR DOORS IS 0.3 CFM PER SQUARE FEET OF DOOR AREA.

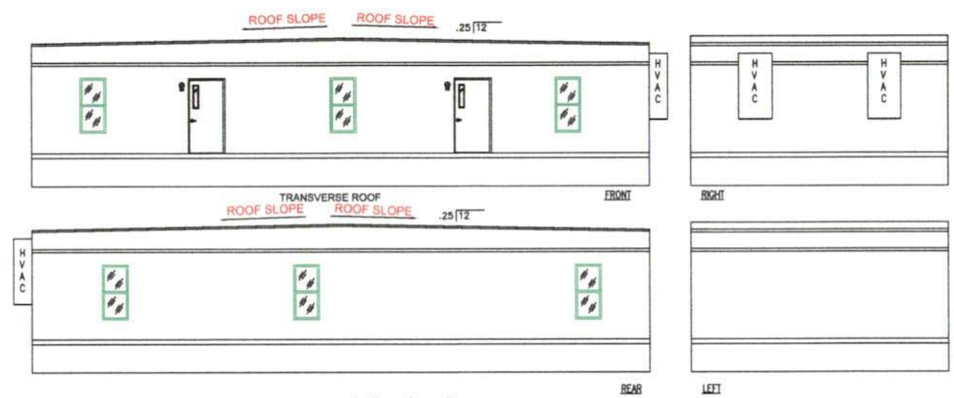

ELEVATIONS 1/8"=1'–0"

NOTE: GUTTERS & DOWNSPOUTS ON SITE (BY OTHERS)

(1) SKIRT, SKIRT VENTILATION, & ACCESS TO BE PROVIDED & INSTALLED BY OWNER ON SITE.
(2) ALL GLASS IN DOORS & WITHIN 24" OF DOORS IS SAFETY GLAZED.
(3) HANDICAP ACCESS REQUIREMENTS TO BE PROVIDED & INSTALLED BY OWNER ON SITE.
(4) FOUNDATION ENCLOSURES(WHEN PROVIDED) MUST HAVE 1 SQUARE FOOT NET VENT AREA PER 150 SQ.FT. OF THE FLOOR AREA.
(5) AN 18"x24" MINIMUM CRAWL SPACE ACCESS TO BE SITE INSTALLED BY OTHERS.

EMC
R. JOHNSON
APPROVED
08 31 2022

TABLE OF CONTENTS

PAGE . . . 1 OF 3
GENERAL NOTES
ELEVATIONS
PAGE . . . 2 OF 3
FLOOR PLAN
ELECTRICAL
PAGE . . . 3 OF 3
CROSS SECTION
FOUNDATION
PLUMBING RISERS

CODE COMPLIANCE:PA
BUILDING: PAUCC (Pennsylvania Uniform Construction Code) 2018 IBC w/amends
FIRE: 2018 IFC (adopted by reference only)
PLUMBING: 2018 IPC
MECHANICAL: 2018 IMC
ELECTRICAL: 2017 NEC
ENERGY: 2018 IECC (w/AMENDMENTS)
ACCESSIBILITY: ICC/ANSI 117.1–2017, 2021 IBC Ch. 11 & Appendix E, 2021 IPC Section 403.4

CODE COMPLIANCE:VA
BUILDING: 2018 VA UNIFORM STATEWIDE BUILDING EDITION (2018 IBC)
PLUMBING: 2018 INTERNATIONAL PLUMBING CODES w/MODIFICATIONS
MECHANICAL: 2018 INTERNATIONAL MECHANICAL CODE
ELECTRICAL: 2017 NATIONAL ELECTRICAL CODE w/MODIFICATIONS
ENERGY: 2018 IECC w/MODIFICATIONS
ACCESSIBILITY: ICC/ANSI A117.1–09

CODE COMPLIANCE: GA
2018 INTERNATIONAL BUILDING CODE w/2020 & 2022 GA AMENDMENTS
2018 INTERNATIONAL FIRE CODE w/ GA AMENDMENTS
2018 INTERNATIONAL PLUMBING CODE w/2020 & 2022 GA AMENDMENTS
2018 INTERNATIONAL MECHANICAL CODE w/2020 GA AMENDMENTS
2020 NATIONAL ELECTRICAL CODE w/ GA AMENDMENTS
2015 INTERNATIONAL ENERGY CONSERVATION CODE w/2020 & 2022 GA AMENDMENTS
2010 ADA STANDARDS FOR ACCESSIBLE DESIGN w/CURRENT RULES OF THE GA STATE ACCESSIBILITY CODES 120–3–20
2018 LIFE SAFETY CODE (NFPA 101) w/CURRENT RULES OF THE GA STATE FIRE MARSHAL 120–3–3

CODE COMPLIANCE:NORTH CAROLINA STATE BUILDING CODE (BASED ON 2015 IBC CODES)
BUILDING: 2018 NORTH CAROLINA BUILDING CODE
2018 NORTH CAROLINA FIRE PREVENTION CODE
MECHANICAL: 2018 NORTH CAROLINA MECHANICAL CODE
PLUMBING: 2018 NORTH CAROLINA PLUMBING CODE
ENERGY: 2020 NCEC (ASHRAE 90.1–2016 w/AMENDS)
ELECTRICAL: 2020 NC ELECTRICAL CODE
ACCESSIBILITY: CHAPTER 11 2012 & NCSBC/ANSI A117.1–2009

CODE COMPLIANCE:OK (ALL w/MODIFICATIONS)
BUILDING: 2018 INTERNATIONAL BUILDING CODES
PLUMBING: 2018 INTERNATIONAL PLUMBING CODES
MECHANICAL: 2018 INTERNATIONAL MECHANICAL CODE
ELECTRICAL: 2017 NATIONAL ELECTRICAL CODE
ENERGY: 2018 IECC COMMERCIAL
ACCESSIBILITY: 1994 ADAAG

COMPLIANCE WITH LOCAL REQUIREMENTS

RULE 110–2–4–03. ALL INDUSTRIAL BUILDINGS BEARING AN INSIGNIA OF APPROVAL ISSUED BY THE COMMISSIONER PURSUANT TO THESE RULES SHALL BE HELD TO COMPLY WITH THE REQUIREMENTS OF ALL ORDINANCES OR REGULATIONS ENACTED BY ANY LOCAL GOVERNMENT WHICH ARE APPLICABLE TO THE MANUFACTURE & INSTALLATION OF SUCH BUILDINGS. THE DETERMINATION BY THE COMMISSIONER OF THE SCOPE OF SUCH APPROVAL IS FINAL.

APPROVED - STATE OF GEORGIA
INDUSTRIALIZED BUILDING PROGRAM

DESIGN AGENCY APPROVAL: EMC

CONST. TYPE	VB
OCCUPANCY	B
FLOOR LL	50 PSF
WIND VELOCITY	140/109 MPH
SEISMIC DES. CAT.	C
FIRE RATING OF EXT. WALLS	0 HRS
PLAN NUMBER	TRC-2456 (1RR) (2022)
APPROVAL DATE	8/31/2022

EMC

KENNETH EARL DUNMON, P.E. — STATE OF GEORGIA PROFESSIONAL ENGINEER No. PE016884 — 8-24-22

KENNETH EARL DUNMON, P.E. — COMMONWEALTH OF PENNSYLVANIA, KENNETH EARL DUNMON, ENGINEER PE041606 — 8-24-22

KENNETH EARL DUNMON, P.E. — COMMONWEALTH OF VIRGINIA, KENNETH EARL DUNMON, Lic. No. 0402018561, PROFESSIONAL ENGINEER — 8-24-22

KENNETH EARL DUNMON, P.E. — NORTH CAROLINA PROFESSIONAL SEAL 017400, ENGINEER, KENNETH E. DUNMON — 8-24-22

CONSULTING ENGINEER:
WALTER E. WOOD, P.E.
165 W. LONGLEAF DR.
SYLVESTER, GA 31791

LICENSED PROFESSIONAL ENGINEER — WALTER E. WOOD — 29755 — OKLAHOMA
VALID
08-31-2022

T&R Custom INCORPORATED
P.O. Box 1079 892 N. Broad St.
Ellaville, GA 31806 (229) 937-2581
www.trcustominc.com

SUBMITTAL #: TRC–2456 (1RR) PA/VA/GA/NC/OK (2022)	
23'–4"x56'–0" BUSINESS OCCUPANCY	
DATE: 8/4/22	
STOCK FLOOR PLAN–PA/VA/GA/NC/OK	
DRAWN BY: RJS	
SCALE: NOTED	SHEET #: 1 of 3
LOCATION: STOCK	

FRAME & FLOOR	WALLS, WINDOWS, DOORS	ELECTRICAL SGL PHASE	PLUMBING	ROOF	EXTERIOR	A/C & HEAT
BONDING STRAP FRAME: 11'-8"x56'-0" AXLES: (2+2) EACH BEAM: 10" [1] NEW HITCH: STD DET XXX JOISTS: 2"x8" FLOOR JOISTS @ 16" O.C. INSULATION: R-30 HIGH DENSITY (R-28 EFFECTIVE) DECKING: 23/32" TONGUE & GROOVE NO CUTBACKS COVERING: 1/8" BLOCK TILE #51630 "COTTAGE TAN" MATELINE GETS 2 1/2" TILE BAR [1] OUTRIGGER FRAME w/ CROSSMEMBERS & OUTRIGGERS @ 48" O.C. USE OFFSET FLANGE FOR COMMODE	WALL HGT. 8' WALLS: 2"X6" STUDS w/DOUBLE TOP PLATES STRAPS @ 16" O.C. INT. WALLS: 2"x4" STUDS W/ SGL. TOP PLATES PLUMBING WALL: 8" @ 24" PER PLAN PLYWOOD SUPPORT: PORCH LIGHTS, T.P. HOLDERS , GRAB BARS , LAV & CABINET 3/4" PLYW. BEHIND ALL PLUMBING FIXTURES COVERING: 1/2" VINYL COVERED GYPSUM THRU OUT "HAMPTON GREY" EXT. INSUL: R-21 INT. INSUL: R-11 IN R.R. EXT. DOORS: (2) 36"x80" H.D. ALUM w/ 4"x24" V.B./ LEVER HDW/ DRIP CAP INT. DOORS: (6) 36"x80" 6-PANEL w/ LEVER HDW (5) WILL ALSO HAVE PASSAGE (1) WILL ALSO HAVE PRIVACY WINDOWS: (6) 24"x60" V.S. WHITE VINYL/INSUL. 1/1 LOW E INSULATED w/MINI-BLINDS	ENT. PANEL: (2) 100 AMP LIGHTS: (17) 4' 2-TUBE LED w/ LENS (6) OCCUPANCY SENSOR SWITCHES (1) SETS OF 3-WAY SWITCHES w/12-3 WIRE (2) EXTERIOR W.P. LED PORCH LIGHT w/ PHOTO CELL (2) LIGHTED EXIT SIGN w/ BATTERY BACKUP (1) COMBO VENT FAN/LIGHT (2) 110V GFI RECEPT @ 44" AFF (1) 110V EXTERIOR W.P. G.F.I. RECEPT (WHILE IN USE) (1) 110V DEDICATED W/H RECEPT @ 66" A.F.F. (1) 110V EXT. W.P. RECEPT UNDER UNIT FOR HEAT TAPE (8) PHONE JACK J-BOX (NO COVER) w/CONDUIT THRU FLOOR	TYPE: CPVC SUPPLY LINES STUB THRU FLOOR CONNECT & MOBAIR PVC WASTE LINES WALL HUNG LAV: (1) w/ PLYWOOD SUPPORT VANITY: N/A MIRROR: (1) 40" AFF TO BOT. COMMODE: (1) HANDICAP USE OFFSET FLANGE SPECIAL: (1) TOILET PAPER HOLDER WATER HEATER: (1) 4 GALLON IN O.H. CAB. IN R.R. GRAB BARS: (1) 36" (1) 42" @ 33" AFF (1) 18" VERTICAL FURNITURE: 3 LF FORMICA COUNTERTOP @ 34" A.F.F. w/15"x15" S.S. BAR SINK & GOOSENECK FAUCET 30" BASE CABINET & 30" KNEESPACE BELOW ALMOND TOP w/ WOODGRAIN FRONT FORMICA COLOR:	MIN. 2x6 TOP ROOF RAIL 2x6 BOT. ROOF RAIL 0.6 HGT. 8' 45 MIL "BLACK" RUBBER TRUSS: #F0138230 @ 24" O.C. TRANSVERSE (24-31-24) 136 3/4" *** RIDGE BEAM: 1 3/4" VERSA-LAM BEAM 24" TALL EA. BEAM 80' LONG CEILING: 1/2" SEASPRAY FIBERGLASS DUCT SUPPLY (R-6.5) RETURN (STD.) INSULATION: R-49 DECKING: 7/16" FR DECK ROOF DECK TO BE FASTENED TO TRUSSES w/ .131 DIA.x2 1/2" NAILS @ 6" O.C. & 11" O.C. 9" FROM END & 6" O.C. & 12" O.C. FOR MIDDLE. (1) COMBO VENT FAN/LIGHT ATTIC VENTILATION: SEE PRINT	SHEATHING: FULL WRAP 7/16" O.S.B. FULL WRAP HOUSE WRAP BOT. TRIM: 26 GA. STEEL IVORY SIDING: 26 GA. HI RIB STEEL IVORY TOP TRIM: 26 GA. STEEL MANSARD IVORY LINE WINDOWS, DOORS & HVAC OPENINGS w/VYCOR TAPE DECALS: N/A	Single Package Vertical AC Unit HVAC: (2) W36AB-A10 60 AMP #6 WIRE HEAT: 10 KW DUCT: FIBERGLASS DUCT SUPPLY (R-6.5) RETURN (STD.) RETURN AIR: SEE PRINT 1,100 CFM @ .3 WC ESP THERMOSTAT: #TH4110D1007 PROGRAMMABLE (PT) RETURN AIR OPENING 28 1/2" x 14 1/2"

26 GAUGE STRAPS 16" O.C. (7) 15 GA.x7/16"x1" (OR BETTER) EACH END OF STRAP

26 GAUGE STRAPS 16" O.C. (7) 15 GA.x7/16"x1" (OR BETTER) EACH END OF STRAP

NOTE: ALL INTERIOR WALL AND CEILING FINISHES SHALL BE CLASS A OR BETTER IN CORRIDORS, AND CLASS B OR BETTER IN ROOMS AND ENCLOSED SPACES; CARPET SHALL BE CLASS II OR BETTER.

- ELECTRICAL DISTRIBUTION PANEL
- 110V EXT. W.P. GFI RECEPT (WHILE IN USE)
- DUPLEX RECEPTACLE 120V
- QUAD RECEPTACLE 120V
- SGL. RECEPTACLE 220V
- 110V EXT. W.P. HEAT TAPE RECEPT
- J-BOX w/CONDUIT STUB FOR PHONE/DATA
- SWITCH, 3-WAY, OCCUPANCY SENSOR, DIMMER
- LED FIXTURE w/2 22W TUBES (44W INPUT WATTAGE)
- LED FIXTURE w/1-13W (13W INPUT WATTAGE)
- EXHAUST FAN
- COMBO EXHAUST FAN/LIGHT 80 CFM EXHAUST FAN/13W LIGHT (14W INPUT WATTAGE)
- PT PROGRAMMABLE THERMOSTAT
- EXIT EXIT SIGN W/BATT. BACK-UP
- EXIT DIRECTIONAL EXIT SIGN W/BATT. BACK-UP
- EXIT COMBO EXIT SIGN/DUAL HEAD EMERG. LIGHT W/BATT. BACK-UP
- DUAL HEAD EMERG. LIGHT W/BATT. BACK-UP

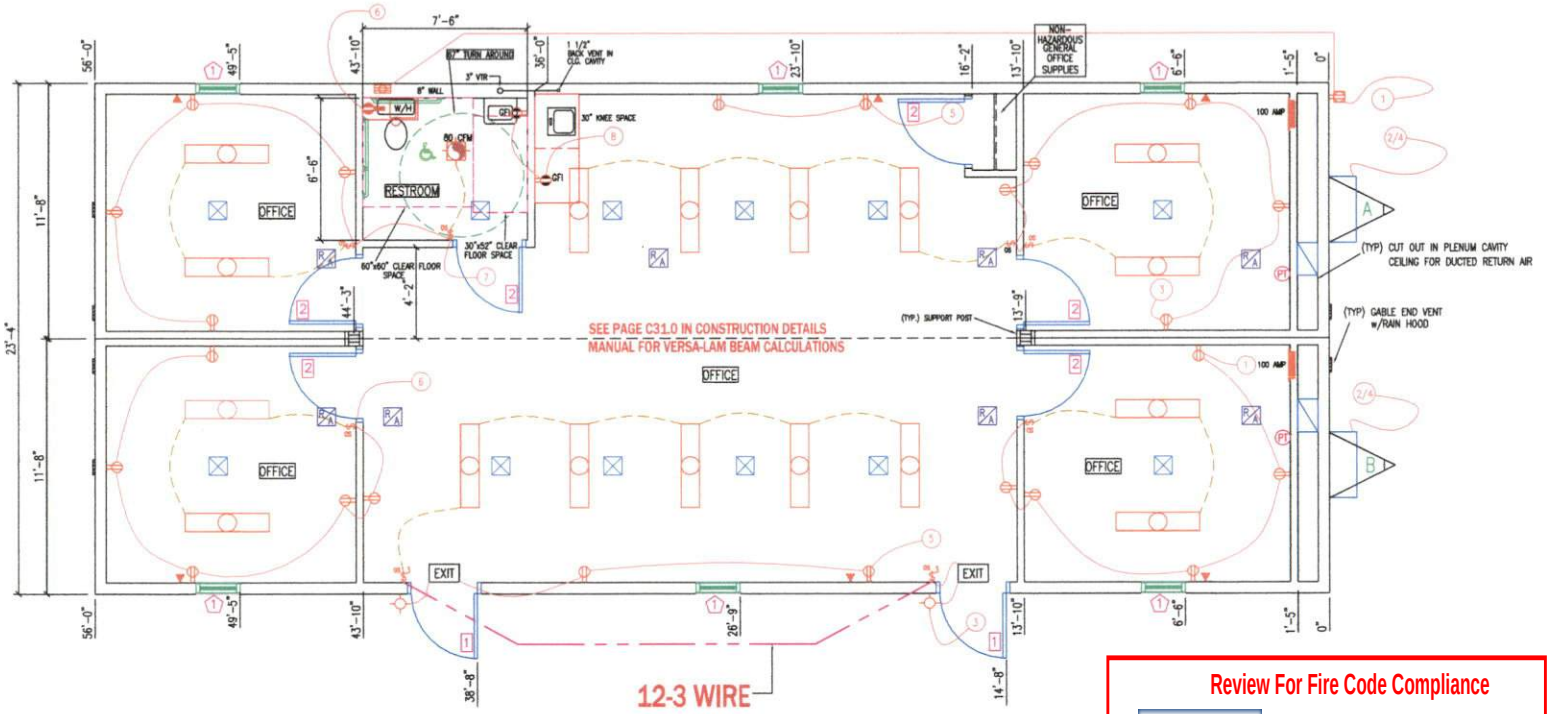

ELECTRICAL SCHEDULE A

CIRCUIT	NOMENCLATURE	BREAKER (AMPS)	WIRE (CU.)
1	GFCI PROTECTED	20 A	12-2 NM
2/4	HVAC	60A(2P)	6-2 #10 GRND.
3,7	LIGHT, FAN, RECEPTS	20 A	12-2 NM
5	RECEPTS	20 A	12-2 NM
6	WATER HEATER	20 A	12-2 NM
8	GFCI RECEPTS	20 A	12-2 NM

ELECTRICAL SCHEDULE B

CIRCUIT	NOMENCLATURE	BREAKER (AMPS)	WIRE (CU.)
1,3,5,6	LIGHTS & RECEPTS	20 A	12-2 NM
2/4	HVAC	60A(2P)	6-2 #10 GRND.

ELECTRICAL PANEL SIZING

DESCRIPTION	KVA
GENERAL LIGHTING	
.0035 KW/SF X 654 SF X 1.25=	2.87
.15 RECEPTS AT 180VA/1000=	2.7
WATER HEATER 1.9 KW x 1.25=	2.38
1 FAN AT .3 KW X 1.25=	0.38
HVAC	10.90
TOTAL 19.23 KW	
TOTAL/240 X 1000= 80.12 AMPS	
INSTALL 100 AMP PANEL	
120/240 V 1ø	

ELECTRICAL PANEL SIZING

DESCRIPTION	KVA
GENERAL LIGHTING	
.0035 KW/SF X 654 SF X 1.25=	2.87
.12 RECEPTS AT 180VA/1000=	2.16
HVAC	10.90
TOTAL 15.93 KW	
TOTAL/240 X 1000= 66.37 AMPS	
INSTALL 100 AMP PANEL	
120/240 V 1ø	

Review For Fire Code Compliance

Harnett County North Carolina

Leslie Jackson

02/09/2023 7:15:55 AM

DOOR SCHEDULE

#	SIZE	JAMB	DESCRIPTION	HARDWARE
1	36"x80"	ALUM	ALUM. w/4"x24"V.B. (SAFETY GLASS)	LEVER
2	36"x80"	PLASTIC	6 PANEL HOLLOW CORE	LEVER

EMC R. JOHNSON APPROVED 08 31 2022

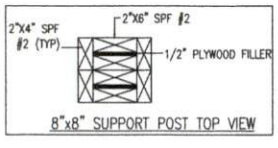

8"x8" SUPPORT POST TOP VIEW

WINDOW SCHEDULE

#	SIZE	DESCRIPTION	FRAME/GLASS
1	24"x60"	VERTICAL SLIDE	VINYL/LOW-E INSULATED

KENNETH EARL DUNMON, P.E. KENNETH EARL DUNMON, P.E. KENNETH EARL DUNMON, P.E. KENNETH EARL DUNMON, P.E.

CONSULTING ENGINEER: WALTER E. WOOD, P.E. 165 W. LONGLEAF DR. SYLVESTER, GA 31791

WALTER E. WOOD 29755 OKLAHOMA VALID 08-31-2022

T&R Custom INCORPORATED
P.O. Box 1079 892 N. Broad St.
Ellaville, GA 31806 (229) 937-2581
www.trcustominc.com

SUBMITTAL #: TRC-2456 (1RR) PA/VA/GA/NC/OK (2022)	
23'-4"x56'-0" BUSINESS OCCUPANCY	
DATE: 8/4/22	
STOCK FLOOR PLAN-PA/VA/GA/NC/OK	
DRAWN BY: RJS	
SCALE: NOTED	SHEET #: 2 of 3
LOCATION: STOCK	

(1) MIN. SOIL BEARING CAPACITY 2,000 P.S.F. REQUIRED.
(2) FOOTING DETAILS TO BE VERIFIED WITH LOCAL CODE AUTHORITY FOR ADDITIONAL SPECIFIC REQUIREMENTS.DETAILS PROVIDED ARE SUGGESTED ONLY & LOCAL CONDITIONS MAY REQUIRE VARIANCES AND ADDITIONS.

THE MINIMUM COMPRESSIVE CONCRETE STRENGTH SHALL BE 2,500 PSI AFTER 28 DAYS.

UNIT MAY BE SHIMMED AS NECESSARY WITH PRESSURE TREATED SHIMS BETWEEN TOP OF PIER AND BOTTOM OF I-BEAM

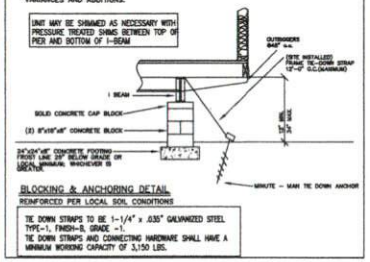

BLOCKING & ANCHORING DETAIL
REINFORCED PER LOCAL SOIL CONDITIONS

TIE DOWN STRAPS TO BE 1-1/4" x .035" GALVANIZED STEEL TYPE-1, FINISH-B, GRADE -1.
TIE DOWN STRAPS AND CONNECTING HARDWARE SHALL HAVE A MINIMUM WORKING CAPACITY OF 3,150 LBS.

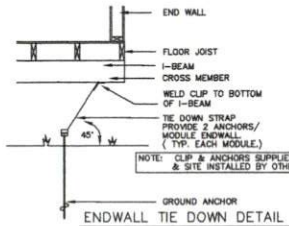

NOTE: CLIP & ANCHORS SUPPLIED & SITE INSTALLED BY OTHERS.

ENDWALL TIE DOWN DETAIL

FOUNDATION NOTES:

1. ALL FOUNDATION CONSTRUCTION, MATERIALS, AND INSTALLATION SHALL BE IN ACCORDANCE WITH ALL APPLICABLE STATE AND LOCAL CODES.
2. TIE-DOWN STRAPS TO BE 1-1/4"x .035" TYPE-1, FINISH B, GRADE 1 ZINC COATED STEEL STRAPPING CERTIFIED BY A REGISTERED ENGINEER OR ARCHITECT AS CONFORMING WITH ASTM D3953-91. TIE DOWN STRAPS AND CONNECTING HARDWARE SHALL HAVE 3150# MINIMUM WORKING CAPACITY.
3. EACH GROUND ANCHOR SHALL HAVE A WORKING CAPACITY NO LESS THAN THE SUM OF THE REQUIRED WORKING CAPACITES OF ALL TIE DOWN STRAPS CONNECTED TO THE GROUND ANCHOR, AND SHALL BE INSTALLED IN ACCORDANCE WITH THE MANUFACTURER'S SPECIFICATIONS. DESIGN OF GROUND ANCHOR, INCLUDING SHAFT LENGTH, NUMBER AND DIAMETER OF HELIXES, ETC., TO BE AS SPECIFIED BY THE GROUND ANCHOR MANUFACTURER FOR THE ACTUAL SOIL TYPE ENCOUNTERED. IF THE HOLDING OR PULLOUT CAPACITIES OF GROUND ANCHORS ARE BELOW THE ASSUMED DESIGN VALUES, THE ARCHITECT/ENGINEER MUST BE CONSULTED FOR AN ALTERNATE ANCHORAGE DESIGN.
4. THE FIRST TIE-DOWN STRAP FROM ENDWALLS SHALL NOT EXCEED 1/2 THE MAXIMUM SPACING INDICATED.
5. ALL PIERS SHALL BE CONSTRUCTED OF CONCRETE MASONRY UNITS CONFORMING TO ASTM C90. MASONRY UNITS SHALL BE LAID IN TYPE M OR S MORTAR OR COVERED WITH SURFACE BONDING CEMENT INSTALLED IN ACCORDANCE WITH ITS LISTING. PIER FOOTINGS SHALL BE AS DESCRIBED ABOVE.
6. MINIMUM CONCRETE FOOTING COMPRESSIVE STRENGTH 2,500 PSI AT 28 DAYS.
7. ALL REINFORCEMENT BARS SHALL COMPLY WITH ASTM A615, GRADE 60. REINFORCEMENT BARS SHALL BE EQUALLY SPACED AND PLACED WITH 3" CLEARANCE FROM BOTTOM AND SIDES OF THE FOOTING.
8. SEE SHEET ONE FOR DESIGN LOADS.
9. I-BEAM SUPPORT PIERS MAY BE INSTALLED LATERALLY (90° FROM THE ORIENTATION SHOWN ON THE FOUNDATION PLAN). CENTERLINE OF EACH PIER MUST BE LOCATED DIRECTLY BELOW THE I-BEAM CENTERLINE.
10. SOIL BEARING CAPACITY SHOWN ON THIS PLAN IS ASSUMED. IF THE ACTUAL SOIL BEARING CAPACITY IS LESS THAN 2,000 PSF, THE ARCHITECT/ENGINEER MUST BE CONSULTED FOR REQUIRED ALTERNATE FOUNDATION DESIGN. FOOTINGS SHALL BE PLACED ON NON-EXPANSIVE SOILS ONLY.
11. INSTALL BLOCK PIER ON EACH SIDE OF ALL EXTERIOR DOOR OPENINGS. SLIGHT ADJUSTMENT MAY BE REQUIRED TO INSURE OPENABILITY AFTER INSTALLATION OF BUILDING IS COMPLETE.
12. THE AREA UNDER FOOTINGS AND FOUNDATIONS SHALL HAVE ALL VEGETATION, STUMPS, ROOTS, AND FOREIGN MATERIALS REMOVED PRIOR TO THEIR CONSTRUCTION.
13. THE FOUNDATION DIMENSIONS SHOWN ARE NOMINAL. AN INCREASE IN MODULE WIDTH SHOULD BE EXPECTED DUE TO MODULE EXPANSION, SETTING TOLERANCES, ETC. THE FOUNDATION CONTRACTOR SHOULD CONSULT WITH THE MANUFACTURER OF THE MODULES PRIOR TO CONSTRUCTION OF THE FOUNDATION TO DETERMINE THE AMOUNT OF INCREASED WIDTH TO BE ADDED TO THE NOMINAL DIMENSIONS SHOWN ABOVE.

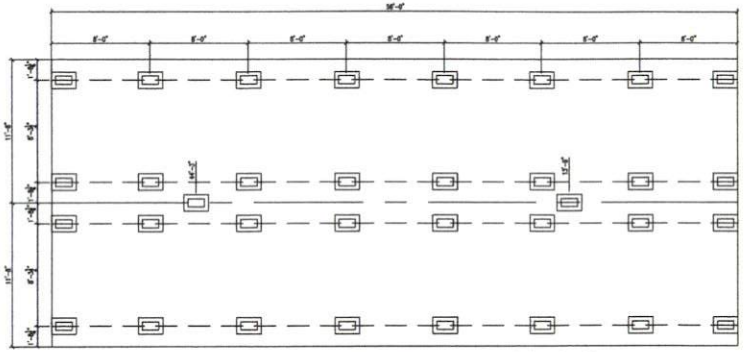

FOUNDATION PLAN 1/8"=1'-0"

ADD A PIER DIRECTLY UNDER EACH SIDE OF EXTERIOR DOORS TO PREVENT MISALIGNMENT AND DRAGGING.

FOUNDATION, PIER BLOCKING, FOOTING, AND ANCHORING DETAILS SHOWN ON THESE PAGES ARE TO BE USED AS A REFERENCE SOURCE ONLY. IT WILL BE THE OWNERS RESPONSIBILITY TO CHECK WITH THE LOCAL CODE AUTHORITY TO VERIFY SPECIFIC REQUIREMENTS AFFECTING THE INSTALLATION, SETUP, AND UTILITY CONNECTION TO THIS BUILDING. T&R CUSTOM ASSUMES NO RESPONSIBILITY FOR LOCAL, COUNTY, AND MUNICIPAL CODE REQUIREMENTS FOR THIS STRUCTURE. ALTERNATE FOUNDATION PLANS MAY BE DESIGNED BY OTHERS AND SUBJECT TO JURISDICTION HAVING AUTHORITY.

ALTERNATE FOUNDATION PLAN MAY BE DESIGNED BY OTHERS

OPTIONAL SIDING:
7/16" SMART PANEL SIDING (ESR-1301) OVER APPROVED MOISTURE BARRIER. DRY LINE ESR#2246

SIDEWALL BRACING: SMART PANEL SIDING SHALL EXTEND CONTINUOUS FROM TOP WALL TOP PLATE 3/4" MINIMUM BELOW TOP OF RIM JOIST WITH ALL SHEATHING EDGES SUPPORTED BY 2"x4" LUMBER #2 S.P.F. OR BETTER.

FASTENED WITH 8d NAILS @ 6"O.C. EDGES AND 12"O.C. IN THE FIELD.

ENDWALL BRACING: SMART PANEL SIDING SHALL EXTEND CONTINUOUS FROM TOP OF TRUSS TOP CHORD TO 3/4" MINIMUM BELOW TOP OF RIM JOIST WITH ALL SHEATHING EDGES SUPPORTED BY 2"x4" LUMBER #2 S.P.F. OR BETTER.

FASTENED WITH 8d NAILS @ 6"O.C. EDGES AND 6"O.C. IN THE FIELD.

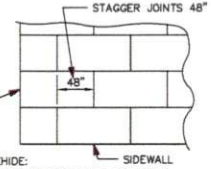

MULEHIDE:
ROOF SHEATHING TO BE FASTENED TO TRUSSES w/ .131 DIA.x2 1/2" NAILS @ 6"O.C. & 11" O.C. FIELD IN END ZONE, 6" O.C. EDGES & 12" O.C. FIELD REMAINDER.

FIRESTONE:
7/16" COVER DX SHEATHING TO BE FASTENED TO TRUSSES w/ .131 DIA.x2 1/2" NAILS @ 6"O.C. & 11" O.C. FIELD IN END ZONE, 6" O.C. EDGES & 12" O.C. FIELD REMAINDER.

ROOF SHEATHING DETAIL

VERSA-LAM BEAM CONSTRUCTION

1 LAYER(S) 1 3/4" x 9" VERSA-LAM EACH MODULE.

NOTES:
1. VERSA-LAM F_b = 2600 PSI
2. VERSA-LAM MUST BE CONTINUOUS OVER CLEARSPAN(S).
3. BEAMS SUPPORTED BY ENDWALL COLUMNS MUST EXTEND CONTINUOUS OVER COLUMNS TO EXTERIOR FACE OF ENDWALL.
4. FASTEN ROOF SHEATHING INTO TOP EDGE OF VERSA-LAM TO PROVIDE CONTINUOUS LATERAL SUPPORT OF BEAM.
5. INSTALL (2 X 4) X 32" OPP @ 3 RIDGE BEAM BEARING STIFFENER OVER SUPPORT COLUMNS WHEN SPECIFIED ON FLOOR PLAN. FASTEN THE FACE OF THE STIFFENER TO THE RIDGE BEAM WITH 1000# GLUE DIMENSIONS AND 6-16 GA. STAPLES WITH 3/4" MINIMUM PENETRATION INTO VERSA-LAM BEAM.
6. WHEN MORE THAN ONE LAYER OF VERSA-LAM IS INSTALLED ON EITHER SIDE OF THE MATING LINE, LAYERS ON THAT SIDE OF THE MATING LINE MUST BE FASTENED TOGETHER WITH 16 GA. STAPLES X 1 1/2" MINIMUM CROWN (INSTALLED PARALLEL TO BEAM SPAN) X 3/4" MINIMUM PENETRATION INTO CONNECTING LAYER STAPLES SHALL BE PLACED AT 8" O.C. MAXIMUM VERTICALLY AND HORIZONTALLY WITH FIRST AND LAST ROW OF STAPLES LOCATED 1" FROM TOP AND BOTTOM EDGE OF BEAM RESPECTIVELY.
7. VERSA-LAM (2.0-3100) INSTALLED IN ACCORDANCE w/EVALUATION REPORT ESR-1040

* NOTE: THERMAL EXPANSION TANK, BACKFLOW PREVENTER, AND CUT-OFF VALVE IF REQUIRED TO BE SUPPLIED AND INSTALLED ON SITE BY OTHERS.

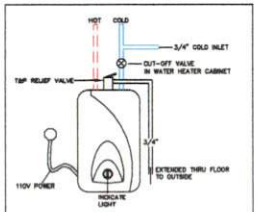

WATER HEATER DIAGRAM N.T.S.

NOTE: A FULL OPEN VALVE SHALL BE SUPPLIED AT THE INTERIOR OF THE BUILDING OR IN THE CRAWL SPACE WITHIN 3 FEET OF ACCESS DOOR OR IN A READILY ACCESSIBLE VALVE BOX WITHIN 5 FEET OF THE EXTERIOR FOUNDATION WALL.

WATER HEATER SHUT-OFF VALVE SHALL BE LOCATED WITHIN 3 FEET OF THE WATER HEATER

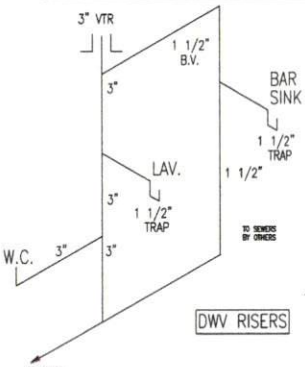

DWV RISERS

NOTE: MAIN SEWER LINE LOCATION IS SHOWN FOR STATE APPROVAL REQUIREMENTS ONLY. MAIN SEWER LINE FINAL DESIGN AND INSTALLATION TO VENT STACKS IS SUBJECT TO SITE CONDITIONS AND LOCAL JURISDICTION APPROVAL.

THE ACTUAL POINT OF INTERCONNECTION TO EXISTING SEWER SYSTEM AND SIZE(S) OF EXISTING "TIE-IN" IS UNKNOWN TO BUILDING MANUFACTURER AND SUBJECT TO LOCAL JURISDICTION APPROVAL.

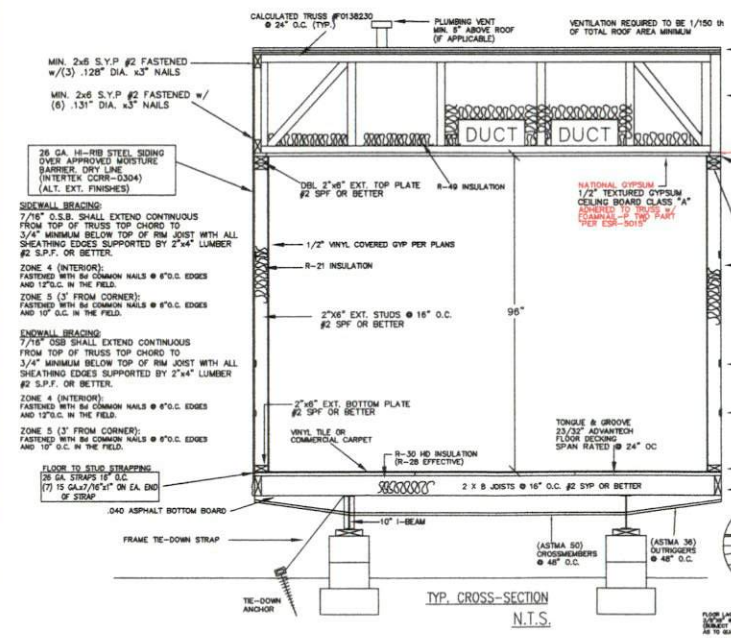

TYP. CROSS-SECTION
N.T.S.

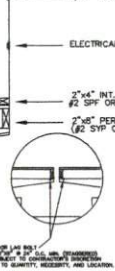

MULE HIDE (ICC/ESR-1463) .045 MIL BLACK EPDM ROOF 7/16" FR DECK PANEL MULE HIDE (ICC/ESR-1385)

SEE FLOOR PLAN FOR RIDGE BEAM DESIGNATION FASTEN RIDGE BEAM TO TRUSS w/ (11) .131" DIA. x3" NAILS

OSB or plywood bearing strip the same thickness as the ceiling material at all bearing walls and columns.

EMC
R. JOHNSON
APPROVED
08 31 2022

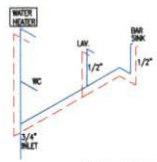

SUPPLY RISER

ALL TRUNK LINES TO BE 3/4" UNLESS NOTED OTHERWISE

SUPPLY LINE NOTES
1) ALL SUPPLY LINES TO BE CPVC EXCEPT WHERE NOTED OTHERWISE.
2) ALL JOINTS TO BE BY MANUFACTURER APPROVED METHODS.
3) ALL FITTINGS TO BE PLASTIC, CHROME, BRASS, OR OTHER APPROVED MATERIAL.
4) ALL SUPPLY LINES TO HAVE APPROVED SHUTOFF VALVES.
5) LINES TO BE SUPPORTED VERTICALLY MAXIMUM 48"O.C.
6) LINES TO BE SUPPORTED HORIZONTALLY MAXIMUM 32"O.C.
7) ALL PIPING BELOW FLOOR NOT CONCEALED IN FLOOR CAVITY TO BE INSULATED WITH MIN. R-4.
8) INTERCONNECTION OF SEPARATE WATER HEATERS TO BE DONE ON SITE BY LICENSED

DWV NOTES
1) PIPING SHALL BE PVC SCHEDULE 40
2) ALL JOINTS SHALL BE MADE WITH FITTING EITHER SOLVENT WELDED OR THREADED ACCORDING TO APPROVED METHODS.
3) VERTICAL PIPING SHALL BE SUPPORTED AT BASE, MIDDLE, AND TOP.
4) HORIZONTAL PIPING SHALL BE SUPPORTED MINIMUM 48"O.C. AND AT EACH CHANGE OF DIRECTION.
5) ALL P-TRAP EXTENSION ARMS OVER 36" MIN. MUST BE SUPPORTED AT BASE AND AS CLOSE TO P-TRAP AS POSSIBLE.
6) PIPING 2.50" AND BELOW TO HAVE .25" FALL IN DIRECTION OF FLOW.
7) PIPING 3.00" AND ABOVE TO HAVE .125" FALL IN DIRECTION OF FLOW.
8) ALL VENTS THRU ROOF MUST PENETRATE ROOF COVERING A MIN. OF 6" AND MUST BE PROPERLY FLASHED.
9) FLASHING TO BE LEAD, COPPER, ALUMINUM, PLASTIC, OR NEOPRENE OF AN APPROVED TYPE.
10) ALL PIPING BELOW FLOOR NOT CONCEALED IN FLOOR CAVITY TO BE INSULATED WITH R-4 OR BETTER.

KENNETH EARL DUNMON, P.E. — GEORGIA PROFESSIONAL ENGINEER No. PE016584 — 8-24-22
KENNETH EARL DUNMON, P.E. — COMMONWEALTH OF PENNSYLVANIA REGISTERED PROFESSIONAL ENGINEER — 8-24-22
KENNETH EARL DUNMON, P.E. — COMMONWEALTH OF VIRGINIA — 8-24-22
KENNETH EARL DUNMON, P.E. — NORTH CAROLINA PROFESSIONAL ENGINEER SEAL 017400 — 8-24-22
CONSULTING ENGINEER:
WALTER E. WOOD, P.E.
165 W. LONGLEAF DR.
SYLVESTER, GA 31791
WALTER E. WOOD — PROFESSIONAL ENGINEER — OKLAHOMA — VALID — 08-31-2022

T&R Custom INCORPORATED
P.O. Box 1079 892 N. Broad St.
Ellaville, GA 31806 (229) 937-2581
www.trcustominc.com

SUBMITTAL #: TRC-2456 (1RR) PA/VA/GA/NC/OK (2022)	
23'-4"x56'-0" BUSINESS OCCUPANCY	
DATE: 8/4/22	
STOCK FLOOR PLAN-PA/VA/GA/NC/OK	
DRAWN BY: RJS	
SCALE: NOTED	SHEET #: 3 of 3
LOCATION: STOCK	