2018 APPENDIX B
BUILDING CODE SUMMARY FOR ALL COMMERCIAL PROJECTS
(EXCEPT 1 AND 2-FAMILY DWELLINGS AND TOWNHOUSES)
(Reproduce the following data on the building plans sheet 1 & 2)

Name of Project: JC POWDER COATING
Address: 220 PROGRESS DRIVE, FUQUAY-VARINA Zip Code 27526
Owner/Authorized Agent: JUSTIN & CARLA TREPPER Phone# 919-375-2930 E-Mail JCPOWDERCOATING922@GMAIL.COM
Owned By: ☐ City/County ☒ Private ☐ State
Code Enforcement Jurisdiction: ☐ City _____ ☒ County HARNETT COUNTY ☐ State _____

CONTACT:

DESIGNER	FIRM	NAME	LICENSE#	TELEPHONE#	EMAIL
Architectural	TONY JOHNSON ARCHITECT	TONY JOHNSON	4296	919-550-7717	tony@tonyjohnsonarchitect.com
Civil					
Electrical	KILIAN ENGINEERING	MICHAEL KILIAN	17304	252-438-8778	mkilian@kilianengineering.com
Fire Alarm					
Plumbing	KILIAN ENGINEERING	MICHAEL KILIAN	17304	252-438-8778	mkilian@kilianengineering.com
Mechanical	KILIAN ENGINEERING	MICHAEL KILIAN	17304	252-438-8778	mkilian@kilianengineering.com
Sprinkler-Standpipe					
Structural					
Retaining Walls>5' high					
Other					

("Other" should include firms and individuals such as truss, precast, pre-engineerd, interior designers, etc.)

2018 NC BUILDING CODE EDITION:

New Building: ☒ New building ☐ Rennovation
☐ First time interior completion (upfit) ☐ Shell/Core
☐ Addition ☐ Phased Construction

2018 EXISTING BUILDING CODE:

Check all that apply:
☐ Prescriptive Compliance ☐ Work Area Compliance ☐ Performance Compliance
☐ Change of Use ☐ Historic Property ☐ Addition ☐ Repair ☐ Relocated
Alteration: ☐ Level I (Renovation) ☐ Level II (Alteration) ☐ Level III (Reconstruction)

Constructed: (date) _____ Current Occupancy (S) (Ch. 3): _____
Renovated: (date) _____ Proposed Occupancy (S) (Ch. 3): F-1

Risk Category (Table 1604.5): Current: ☐ I ☐ II ☐ III ☐ IV
Proposed: ☐ I ☒ II ☐ III ☐ IV

BASIC BUILDING DATA:

Construction Type: ☐ I-A ☐ II-A ☐ III-A ☐ IV ☐ V-A
☐ I-B ☒ II-B ☐ III-B ☐ V-B

Mixed construction: ☒ No ☐ Yes Types
Sprinklers: ☒ No ☐ Yes ☐ Partial ☐ NFPA 13-07 ☐ NFPA 13R-07 ☐ NFPA 13D-07
Standpipes: ☒ No ☐ Yes Class: ☐ I ☐ II ☐ III ☐ Wet ☐ Dry NFPA 14-07
Primary Fire District: ☒ No ☐ Yes Flood Hazard Area: ☒ No ☐ Yes
Special Inspections Required: ☒ No ☐ Yes

GROSS BUILDING AREA TABLE:

Floor	Existing (sq.ft.)	New (sq.ft.)	Renovated (sq.ft.)	Sub-Total
3rd Floor				
2nd Floor				
Mezzanine				
1st Floor		9,736		9,736
Basement				
Total 9,736				

ALLOWABLE AREA: CHAPTER 5

OCCUPANCY
Primary Occupancy:
Assembly 303 ☐ A-1 ☐ A-2 ☐ A-3 ☐ A-4 ☐ A-5
Business 304 ☐ B
Educational 305 ☐ E
Factory 306 ☒ F-1 Moderate ☐ F-2 Low
Hazardous 307 ☐ H-1 Detonate ☐ H-2 Deflagrate ☐ H-3 Combust ☐ H-4 Health ☐ H-5 HPM
Institutional 308 ☐ I-1 ☐ I-2 ☐ I-3 ☐ I-4 Day Care
I-3 Use Condition ☐ 1 ☐ 2 ☐ 3 ☐ 4 ☐ 5
Mercantile 309 ☐ M
Residential 310 ☐ R-1 ☐ R-2 ☐ R-3 ☐ R-4
Storage 311 ☐ S-1 Moderate ☐ S-2 Low ☐ High-piled
☐ Parking Garage ☐ Open ☐ Enclosed ☐ Repair Garage
Utility and Miscellaneous 312 ☐ U

Accessory Occupancies (<= 10%):
Assembly 303 ☐ A-1 ☐ A-2 ☐ A-3 ☐ A-4 ☐ A-5
Business 304 ☒ B
Educational 305 ☐ E
Factory 306 ☐ F-1 Moderate ☐ F-2 Low
Hazardous 307 ☐ H-1 Detonate ☐ H-2 Deflagrate ☐ H-3 Combust ☐ H-4 Health ☐ H-5 HPM
Institutional 308 ☐ I-1 ☐ I-2 ☐ I-3 ☐ I-4 Day Care
I-3 Use Condition ☐ 1 ☐ 2 ☐ 3 ☐ 4 ☐ 5
Mercantile 309 ☐ M
Residential 310 ☐ R-1 ☐ R-2 ☐ R-3 ☐ R-4
Storage 311 ☒ S-1 Moderate ☐ S-2 Low ☐ High-piled
☐ Parking Garage ☐ Open ☐ Enclosed ☐ Repair Garage
Utility and Miscellaneous 312 ☐ U

INCIDENTAL USES:
☐ Furnace room where any piece of equipment is over 400,000 Btu per hour input
☐ Room with boilers where the largest piece of equipment is over 15 psi and10 horsepower
☐ Refrigerant machine room
☐ Hydrogen cutoff rooms, not classified as Group H
☐ Incinerator rooms
☐ Paint shops, not classified as Group H, located in occupanices other than Group F
☐ Laboratories and vocational shops, not classified as Group H, located in a Group E or I-2 occupancy
☐ Laundry room over 100 square feet
☐ Group I-3 cells equipped with padded surfaces
☐ Group I-2 waste and linen collection rooms
☐ Waste and linen collection rooms over 100 square feet
☐ Stationary storage batter systems having a liquid electrolyte capacity of more than 50 gallons, or a lithium-ion capacity of 1,000 pounds used for facility standby power, emergency power, or uninterrupted power supplies
☐ Rooms containing fire pumps
☐ Room containing Life-Safety generator
☐ Room containing primary transformers
☐ Group I-2 storage rooms over 100 square feet
☐ Group I-2 commercial kitchens
☐ Group I-2 laundries equal to or less than 100 square feet
☐ Group I-2 room or spaces that contain fuel-fired heating equipment

Special Uses:
☐ 413 ☐ 414 ☐ 415 ☐ 416 ☐ 417 ☐ 418 ☐ 419 ☐ 420 ☐ 421 ☐ 422 ☐ 423 ☐ 424 ☐ 425
☐ 426 ☐ 427

Special Provisions: ☐ 510.2 ☐ 510.3 ☐ 510.4 ☐ 510.5 ☐ 510.6 ☐ 510.7 ☐ 510.8 ☐ 510.9

Mixed Occupancy: ☒ No ☐ Yes Separation: 0 Hr. Exception: _____

Select one

Actual Area of Occupancy A / Allowable Area of Occupancy A + Actual Area of Occupancy B / Allowable Area of Occupancy B ≤1
+ + = <1.00

ALLOWABLE AREA

Story Number	Description and Use	A Building Area Per Story (Actual)	B Table 506.2 Area	C Area for Frontage Increase	D Area for Sprinkler Increase	E Allowable Area or Unlimited	F Maximum Building Area
1	TYPE II-B: F-1	9,736	15,500	---	---		15,500

1. Frontage area increases from Section 506.2 are computed thus:
a. Perimeter which fronts a public way or open space having 20 feet minimum width= _____ (F)
b. Total Building Perimeter= _____ (P)
c. Ratio (F/P)= _____ (F/P)
d. W=Minimum width of public way= _____ (W)
e. Percent of frontage increase I(f)= [F/P-0.25]x W/30= _____ (%)

2. The sprinkler increase per Section 506.3 is as follows:
a. Multi-story building I(s)=200 percent
b. Single story building I(s)=300 percent

3. Unlimited area applicable under conditions of Sections Group B, F, M, S, A-4 (507.3), A-3 (507.6); Group A motion picture (507.11); Covered Mall Buildings (507.12); and H-2 aircraft paint hangers (507.9).

4. Maximum Building Area=total number of stories in the building x E, But not greater than 3xE (506.4.1).

5. The maximum area of a single-use parking garage shall be permitted to comply with Table 406.3.5.
The maximum area of air traffic control towers must comply with table 412.3.2.

ALLOWABLE HEIGHT: CHAPTER 5

	Allowable (Table 504.3)	Increased for Sprinklers (506.3)	Shown on Plans	Code Reference
Type of Construction	Type: II-B		Type:	
Building Height in Feet	Feet= 55'	Feet= H + 20'= 75'	Feet= 25'	
Building Height in Stories	Stories= 2	Stories + 1= 3	Stories= 1	

Provide code reference if the "Shown on Plans" quantity is not based on Table 504.3 or 504.4

FIRE PROTECTION REQUIREMENTS: CHAPTER 6 (TABLE 601)

Building Element	Fire Separation Distance (Feet)	Rating* Required	Rating* Provided (w/ * Reduction)	Detail # and Sheet #	Design # for Rated Assembly	Design # for Rated Penetration	Design # for Rated Joints
Structural frame, including columns, girders, trusses	>30	0					
Bearing Walls							
Exterior							
North		0					
East		0					
West		0					
South		0					
Interior							
Nonbearing walls and partitions							
Exterior walls (T602)							
North	>30	0					
East	>30	0					
West	>30	0					
South	>30	0					
Interior walls and partitions		0					
Floor Construction*** ***including supporting beams and joists		0					
Roof Construction including supporting beams and joists		0					
Shaft Enclosures- Exit		0					
Shaft Enclosures- Other		0					
Corridor Separation		0					
Occupancy/ Fire Barrier Separation		0					
Party/ Fire Wall Separation		0					
Smoke Barrier Separation		0					
Tenant/ Dweling Unit Separation		0					
Incidental Use Separation		0					

* Indicate section number permitting reduction

PERCENTAGE OF WALL OPENING CALCULATIONS:

Fire Separation Distance (Feet) From Property Lines	Degree of Openings Protection (Table 705.8)	Allowable Area (%)	Actual Shown on Plans (%)
NORTH: >30'-0"	UNPROTECTED, NONSPRINKLERED	NO LIMIT	
EAST: >30'-0"	UNPROTECTED, NONSPRINKLERED	NO LIMIT	
SOUTH: 25'-0"	UNPROTECTED, NONSPRINKLERED	70%	0%
WEST: >30'-0"	UNPROTECTED, NONSPRINKLERED	NO LIMIT	

LIFE SAFETY SYSTEM REQUIREMENTS: Chapters 9 and 10

Emergency Lighting: S1006 ☐ No ☒ Yes
Exit Signs: S1011 ☐ No ☒ Yes
Fire Alarm: S907, NFPA 72-07 ☒ No ☐ Yes
Smoke Detection Systems: S907 ☒ No ☐ Yes ☐ Partial _____
Carbon Monoxide Detection: ☒ No ☐ Yes

LIFE SAFETY PLAN REQUIREMENTS:

Life Safety Plan Sheet #, if Provided: _____

☐ Fire and/or smoke rated wall locations (Chapter 7)
☐ Assumed and real property line locations (If not on site plan)
☐ Exterior wall opening area with respect to distance to assumed property lines (705.8)
☐ Existing structures within 30' of the proposed building
☒ Occupancy types for each area as it relates to occupant load calculation (Table 1004.1.2)
☒ Occupant loads for each area
☒ Exit access travel distances (1017)
☒ Common path of travel distances (1006.2.1 & 1006.3.2(1))
☐ Dead end lengths (1020.4)
☒ Clear exit widths for each exit door
☒ Maximum calculated occupant load capacity each exit door can accommodate based on egress width (1005.3)
☒ Actual occupant load for each exit door
☐ A separate schematic plan indicating where fire rated floor/ceiling and/or roof structure is provided for purposes of occupancy separation
☐ Location of doors with panic hardware (1010.1.10)
☐ Location of doors with delayed egress locks and the amount of delay (1010.1.9.7)
☐ Location of doors with electromagnetic egress locks (1010.1.9.9)
☐ Location of doors equipped with hold-open devices
☐ Location of emergency escape windows (1030)
☐ The square footage of each fire area (202)
☐ The square footage of each smoke compartment for Occupancy Classification I-2 (407.5)
☐ Note any code exceptions or table notes that may have been utilized regarding the items above

ACCESSIBLE DWELLING UNITS: (Section 1107)

Total Units	Accessible Units Req'd	Type A Units Req'd	Type A Units Provided	Type B Units Req'd	Type B Units Provided	Total Accessible Units Provided

ACCESSIBLE PARKING REQUIREMENTS: (Section 1106)

Lot or Parking Area	Total Number of Parking Spaces: Required	Total Number of Parking Spaces: Provided	# of Accessible Spaces Provided: Regular with 5' Access Aisle	Van Space Access Aisle: 132" Access	Van Space Access Aisle: 8' Access	Total # Accessible Provided
TOTAL						

Note: one out of every six accessible parking spaces shall be for van accessible parking.

PLUMBING FIXTURE REQUIREMENTS: Chapter 29 (Table 2902.1)

SEE ATTACHED LETTER - REFERENCE NC PLUMBING CODE 403.6 - ADJUSTMENTS IN OCCUPANT CONTENT

Occupancy Use Group and/or Space Designation		Waterclosets: Male	Waterclosets: Female	Waterclosets: Unisex	Urinals Plum-Sec. (419.2)	Lavatories: Male	Lavatories: Female	Lavatories: Unisex	Showers/ Tubs	Drinking Fountains Plum-Sec. (410): Regular	Drinking Fountains Plum-Sec. (410): Accessible
Space	Existing										
	New	1	1			1	1			1	1
	Req'd	1	1			1	1			1	1

SPECIAL APPROVAL: Special approval: (Local Jurisdiction, Department of Insurance, OSC, DPI, DHHS, ICC, etc., describe below)

_____

ENERGY SUMMARY

ENERGY REQUIREMENTS:

The following data shall be considered minimum and any special attribute required to meet the energy code shall also be provided. Each Designer shall furnish the required portions of the project information for the plan data sheet. If performance method, state the annual energy cost for the standard design vs annual energy cost for the proposed design.

Existing building envelope complies with code: ☐ No ☐ Yes
Exempt Building: ☐ No ☒ Yes — [E] 1301.1.1 CRITERIA. EXCEPTION: PER N.C.G.S. 143-138 (b18), NO ENERGY CONSERVATION CODE PROVISIONS SHALL APPLY TO ANY STRUCTURE FOR WHICH THE PRIMARY OCCUPANCY CLASSIFICATION IS GROUP F,S,U OR U. THIS EXCLUSION SHALL APPLY TO THE ENTIRE BUILDING AREA.
Climate Zone: ☐ 3A ☐ 4A ☐ 5A
Method of Compliance:
☐ Prescriptive (Energy Code) ☐ Prescriptive (ASHRAE 90.1)
☐ Performance (Energy Code) ☐ Performance (ASHRAE 90.1)

THERMAL ENVELOPE:

Roof/ceiling Assembly (each assembly)
Description of assembly: _____
U-Value of total assembly: _____
R-Value of insulation: _____
Skylights in each assembly: _____
U-Value of skylight: _____
Total square footage of skylight in each assembly: _____

Exterior Walls (each assembly)
Description of assembly: _____
U-Value of total assembly: _____
R-Value of insulation: _____
Openings (windows or doors with glazing)
U-Value of assembly: _____
Solar heat gain coefficient: _____
Projection factor: _____
Door R-Value: _____

Walls Below Grade (each assembly)
Description of assembly: _____
U-Value of total assembly: _____
R-Value of insulation: _____

Floors over unconditioned space (each assembly)
Description of assembly: _____
U-Value of total assembly: _____
R-Value of insulation: _____

Floors slab on grade
Description of assembly: _____
U-Value of total assembly: _____
R-Value of insulation: _____
Horizontal/vertical requirement: _____
Slab heated: _____

2018 APPENDIX B
BUILDING CODE SUMMARY FOR ALL COMMERCIAL PROJECTS
STRUCTURAL DESIGN
(PROVIDE ON THE STRUCTURAL SHEETS IF APPLICABLE)

DESIGNS LOADS:

Importance Factors: Snow (I_S) ☐ .80 ☐ 1.0 ☐ 1.1 ☐ 1.2
Seismic (I_E) ☐ 1.0 ☐ 1.25 ☐ 1.5

Live Loads: Roof (live & snow) _____ (psf)
Mezzanine _____ (psf)
Floor _____ (psf)
Ground Snow Load: _____ (psf)
Wind Load: Basic Wind Speed _____ (mph ASCE 7)
Exposure Category ☐ B ☐ C ☐ D

SEISMIC DESIGN CATEGORY: ☐ A ☐ B ☐ C ☐ D

Provide the following Seismic Design Parameters:
Risk Category (Table 1604.5) ☐ I ☐ II ☐ III ☐ IV
Spectral Response Acceleration S_S _____%g S_1 _____%g
Site Classification (ASCE 7) ☐ A ☐ B ☐ C ☐ D ☐ E ☐ F
Data Source: ☐ Field Test ☐ Presumptive ☐ Historical Data

Basic Structural System: (check one)
☐ Bearing Wall ☐ Dual w/ Special Moment Frame
☐ Building Frame ☐ Dual w/ Intermediate R/C or Special Steel
☐ Moment Frame ☐ Inverted Pendulum

Analysis Procedure: ☐ Simplified ☐ Modal ☐ Equivalent Lateral Force
Architectural, Mechanical, Components Anchored? ☐ Yes ☐ No

LATERAL DESIGN CONTROL: ☐ Earthquake ☐ Wind

SOIL BEARING CAPACITIES:
Field Test (provide copy of test report) _____ (psf)
Presumptive Bearing Capacity _____ (psf)
Pile Size, Type, and Capacity _____ (psf)

SOIL BEARING CAPACITIES: ☐ Yes ☐ No

2018 APPENDIX B
BUILDING CODE SUMMARY FOR ALL COMMERCIAL PROJECTS
MECHANICAL DESIGN
(PROVIDE ON THE MECHANICAL SHEETS IF APPLICABLE)

MECHANICAL SUMMARY

MECHANICAL SYSTEMS, SERVICE SYSTEMS AND EQUIPMENT

Thermal Zone
winter dry bulb: _____
summer dry bulb: _____
Interior Design Conditions
winter dry bulb: _____
summer dry bulb: _____
relative humidity: _____
Building heating load: _____
Building cooling load: _____
Mechanical Spacing Conditioning System
Unitary
description of unit: _____
heating efficiency: _____
cooling efficiency: _____
size category of unit: _____
Boiler
Size category. If oversized, state reason: _____
Chiller
Size category. If oversized, state reason: _____

List equipment efficiencies: _____

2018 APPENDIX B
BUILDING CODE SUMMARY FOR ALL COMMERCIAL PROJECTS
ELECTRICAL DESIGN
(PROVIDE ON THE ELECTRICAL SHEETS IF APPLICABLE)

ELECTRICAL SUMMARY

ELECTRICAL SYSTEM AND EQUIPMENT
Method of Compliance: _____
Lighting schedule (each fixture type)
lamp type required in fixture; number of lamps in fixture; ballast type used in the fixture; number of ballast in fixture; total wattage per fixture; total interior wattage specified vs. allowed (whole building or space by space); total exterior wattage specified vs. allowed
Additional Efficiency Package Options
(When using the 2018 NCECC; not required for ASHRAE 90.1)
☐ C406.2 More Efficient HVAC Equipment Performance
☐ C406.3 Reduced Lighting Power Density
☐ C406.4 Enhanced Digital Lighting Controls
☐ C406.5 On-Stie Renewable Energy
☐ C406.6 Dedicated Outdoor Air System
☐ C406.7

TONY L. JOHNSON ARCHITECT, P.A. REGISTERED ARCHITECTURAL CORPORATION 51220 NORTH CAROLINA CLAYTON, NC
TONY LEE JOHNSON REGISTERED ARCHITECT 4296 NORTH CAROLINA CLAYTON, NC
7/23/2020

REVISIONS

NUMBER	DATE

NOTICE TO CONTRACTOR
THIS PLAN MUST BE ON JOB SITE WHEN WORK IS BEING PERFORMED AND APPROVED BY THE HARNETT COUNTY INSPECTOR
APPROVED
HARNETT COUNTY
NOT A PERMIT
08/07/2020
Harnett COUNTY

JC POWDER COATING
220 PROGRESS DRIVE, FUQUAY-VARINA, NC

919-550-7717
Tony@TonyJohnsonArchitect.com
104 North Lombard St
Clayton, NC 27520
Tony.JohnsonArchitect.com
TONY JOHNSON ARCHITECTURE

DATE 7/23/2020 11:16:22 AM
PROJECT # 2020.021
APPENDIX B
SHEET A-0.1

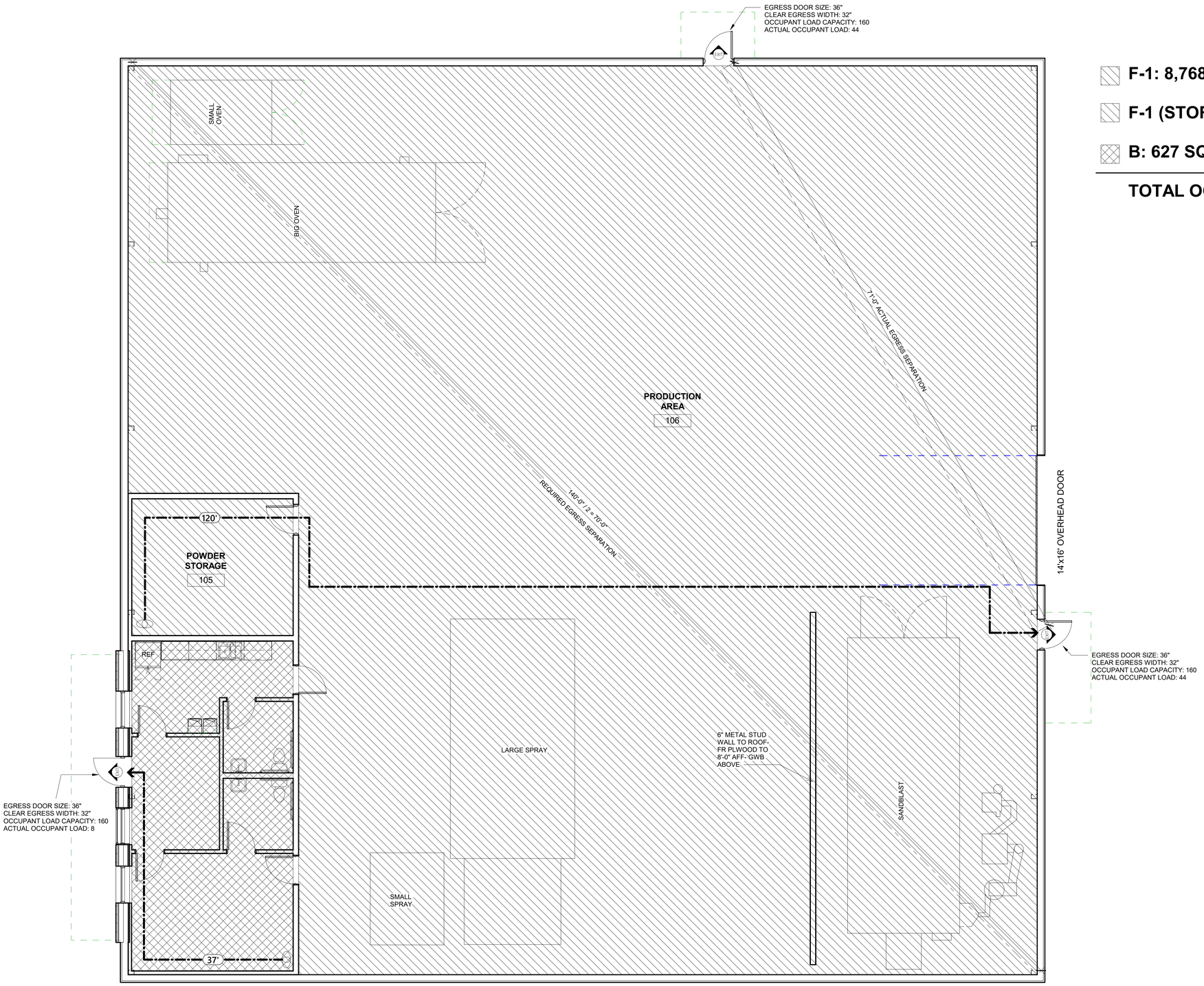

1 LIFE SAFETY PLAN
3/16" = 1'-0"

F-1: 8,768 SQFT / 100 = 88 PERSONS

F-1 (STORAGE): 260 SQFT / 300 = 1 PERSON

B: 627 SQFT / 100 = 7 PERSONS

TOTAL OCCUPANTS: 96

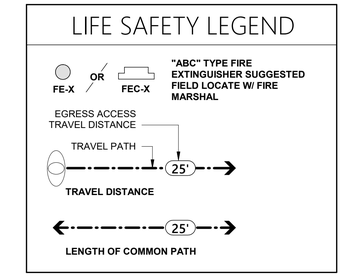

2 LIFE SAFETY LEGEND
1/8" = 1'-0"

NOTE:
1. SURFACE MOUNTED FIRE EXTINGUISHER, IF APPLICABLE, SHALL BE MOUNTED SAME HEIGHT AS THE FLUSH CABINET.
2. PROVIDE BLOCKING FOR SURFACE MOUNTED FIRE EXTINGUISHERS.
3. ALL FIRE EXTINGUISHERS TO BE MOUNTED WITHIN A 75' MAXIMUM DISTANCE FROM ANY POINT.

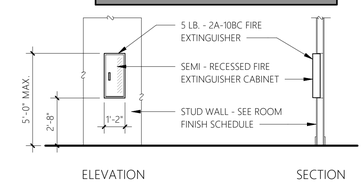

3 TYPICAL "ABC" FIRE EXTINGUISHER
1/4" = 1'-0"

EXIT REQUIREMENTS

Floor, Room or Space	MINIMUM NUMBER OF EXITS: Required (Table - 1006.3.1)	MINIMUM NUMBER OF EXITS: Shown on Plans	TRAVEL DISTANCE (Feet): Allowable Travel Distance (Table - 1017.2)	TRAVEL DISTANCE (Feet): Actual Travel Distance Shown on Plans
BUSINESS	1	1	100'	37' - 0"
PRODUCTION	2	2	200'	120' - 0"

Notes
1. Corridor dead ends (section 1020.4)
2. Building with single exits (Tables 1006.2.1). Spaces with one means of egress (Table - 1009.1)
3. Common Path of Travel (Section 1006.2.1)

4 LEGEND REQUIREMENTS
1/4" = 1'-0"

TONY L. JOHNSON ARCHITECT, P.A. REGISTERED ARCHITECTURAL CORPORATION 51220 NORTH CAROLINA CLAYTON, NC

TONY LEE JOHNSON REGISTERED ARCHITECT 4296 NORTH CAROLINA CLAYTON, NC

7/23/2020

REVISIONS	
NUMBER	DATE

JC POWDER COATING
220 PROGRESS DRIVE, FUQUAY-VARINA, NC

919-550-7717
Tony@TonyJohnsonArchitect.com
104 North Lombard St
Clayton, NC 27520
TonyJohnsonArchitect.com

TONY JOHNSON ARCHITECTURE

DATE 7/23/2020
11:16:47 AM

PROJECT # 2020.021

LIFE SAFETY PLAN

SHEET
A-0.2

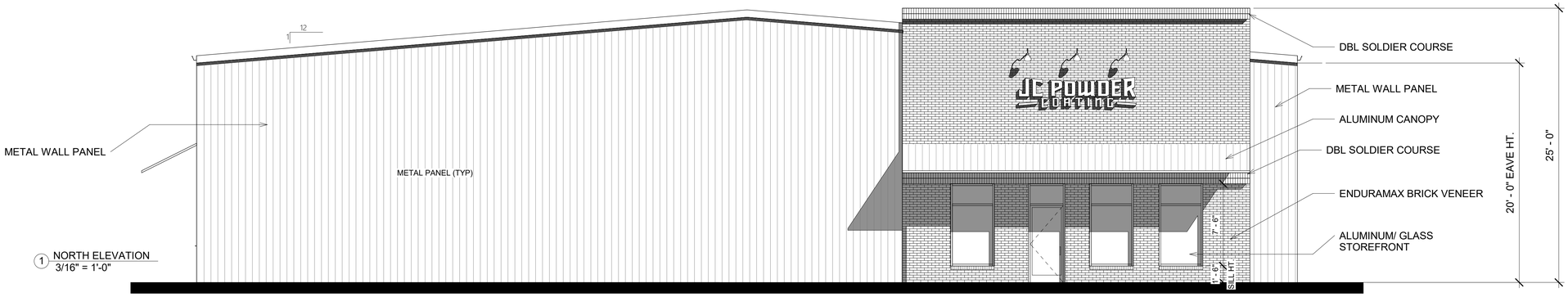

1 NORTH ELEVATION
3/16" = 1'-0"

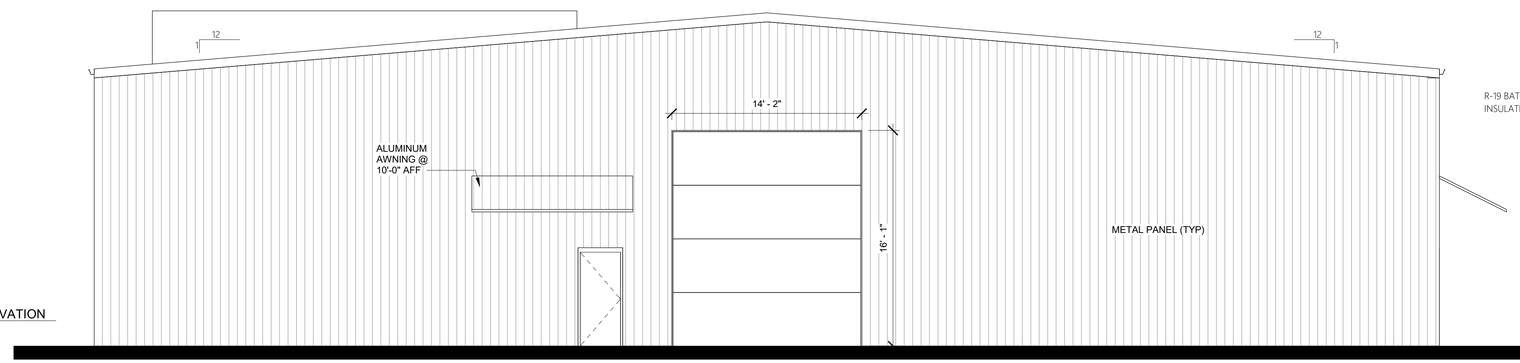

2 SOUTH ELEVATION
3/16" = 1'-0"

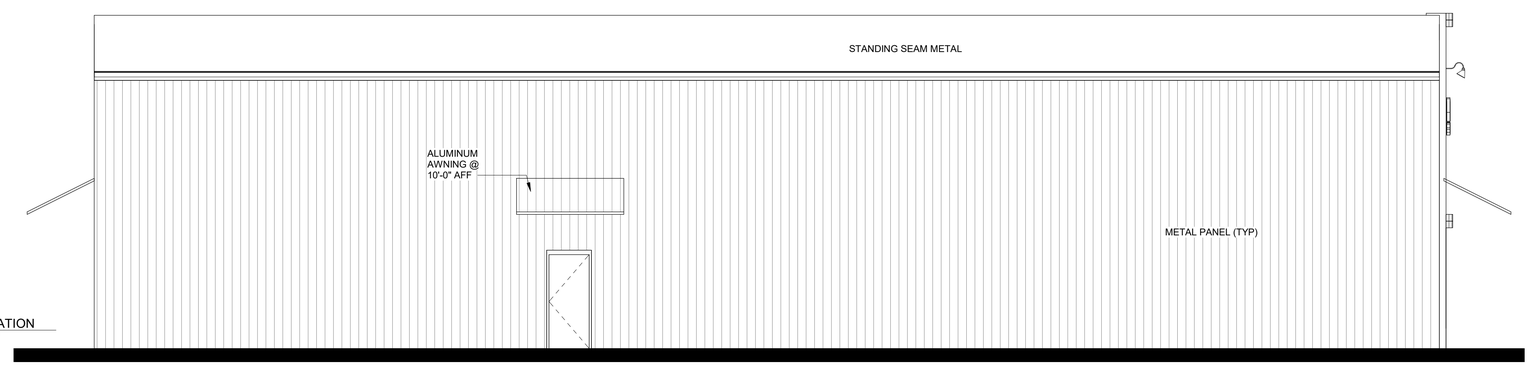

3 EAST ELEVATION
3/16" = 1'-0"

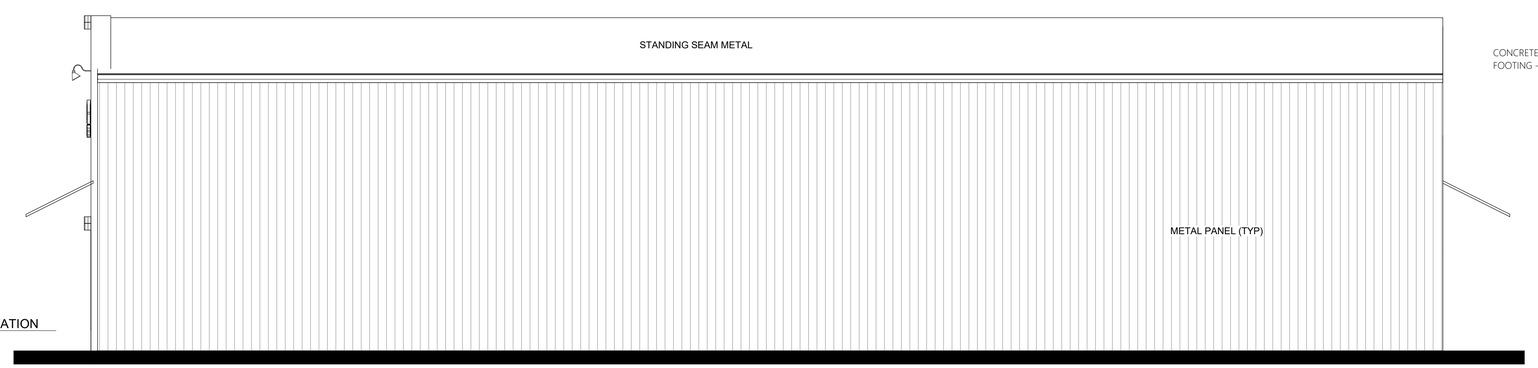

4 WEST ELEVATION
3/16" = 1'-0"

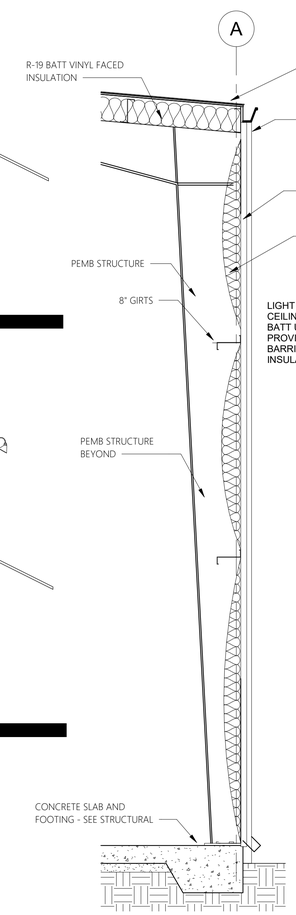

5 SECTION ONE
1/2" = 1'-0"

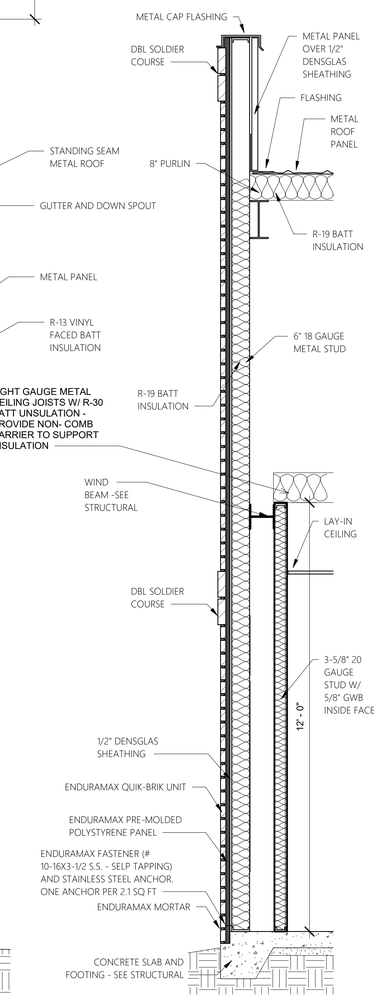

6 SECTION TWO
1/2" = 1'-0"

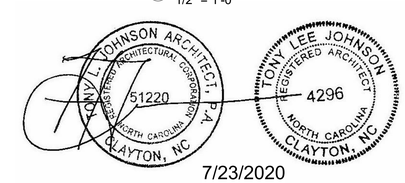

7/23/2020

REVISIONS	
NUMBER	DATE

JC POWDER COATING

220 PROGRESS DRIVE, FUQUAY-VARINA, NC

919-550-7717
Tony@TonyJohnsonArchitect.com
104 North Lombard St
Clayton, NC 27520
TonyJohnsonArchitect.com

TONY JOHNSON ARCHITECTURE

DATE 7/23/2020
11:16:50 AM

PROJECT # 2020.021

ELEVATIONS

SHEET A-1

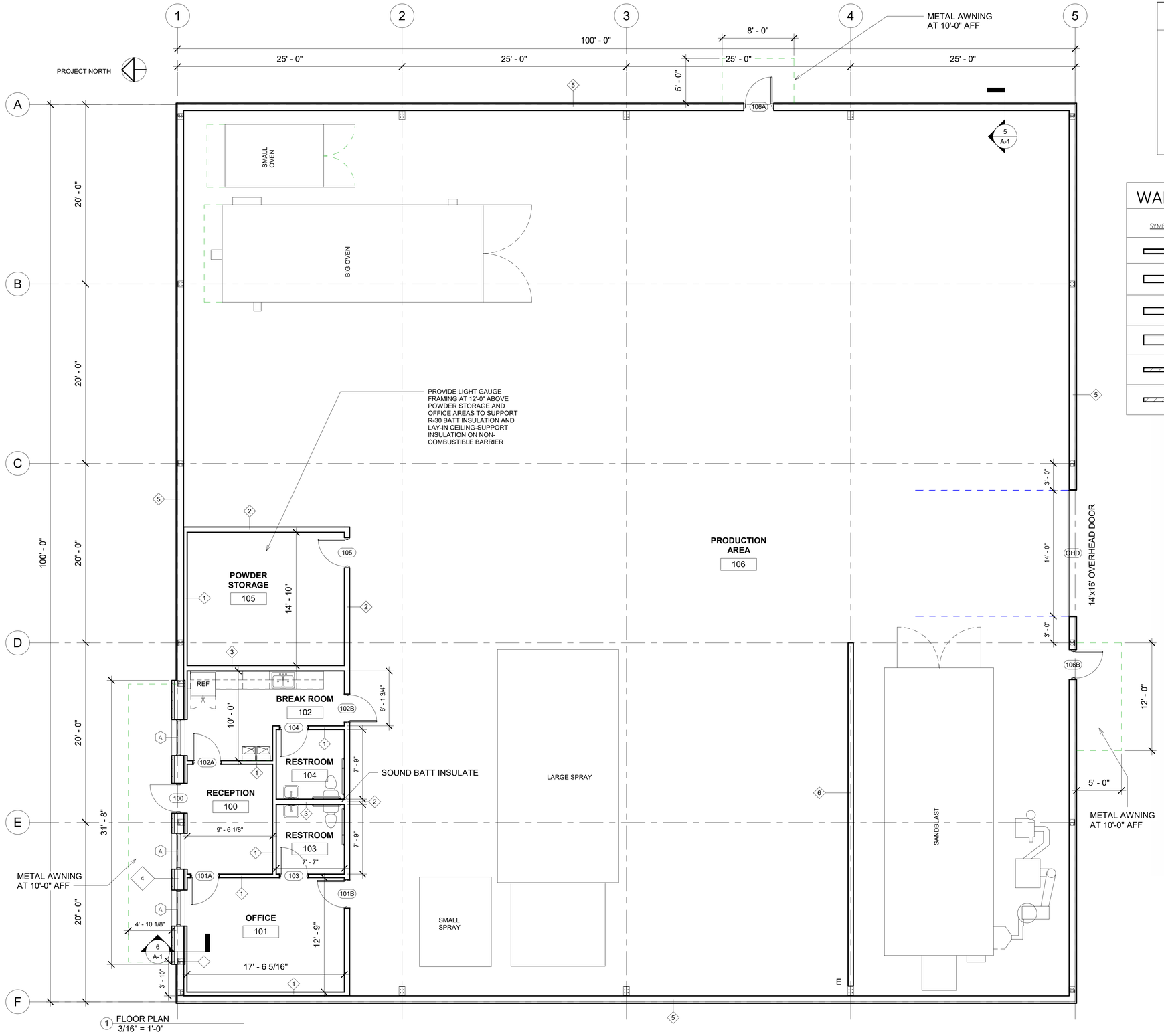

FLOOR PLAN NOTES

1. FIELD VERIFY ALL EXISTING CONDITIONS BEFORE CONSTRUCTION BEGINS AND NOTIFY ARCHITECT OF ANY DISCREPANCIES.
2. DIMENSIONS SHOWN ARE FROM WALL FACE TO WALL FACE, U.N.O. ALL DIMENSIONS REFERENCED HEREIN ARE IMPERIAL STANDARD, U.N.O.
3. ALL INTERIOR WALLS TO RECEIVE BATT INSULATION. PROVIDE SOUND BATT INSULATION @ RESTROOM.
4. PROVIDE WATER RESISTANT GYPSUM WALL BOARD AT ALL WET WALLS INCLUDING, BUT NOT LIMITED TO, WALLS AT BATHROOMS AND BREAK ROOM.
5. PROVIDE SUPPLEMENTAL FRAMING, METAL BLOCKING / STRAPPING AND BRACING AS REQ'D FOR SUPPORT OF FIXTURES, EQUIPMENT, TOILET ACCESSORIES, FURNISHINGS, FURNITURE / EQUIPMENT, AND SIMILAR CONSTRUCTION.

WALL TYPES

SYMBOL	TAG	DESCRIPTION
	1	INTERIOR - 3-5/8" 20 GAUGE METAL STUD @ 16" OC, 5/8" GYPSUM WALL BOARD BOTH SIDES, BATT INSULATION, 12'-0" HGT. U.N.O.
	2	INTERIOR - 6" 20 GAUGE METAL STUD @ 16" OC, 5/8" GYPSUM WALL BOARD BOTH SIDES, R-19 BATT INSULATION TO 12'-0", EXTEND STUDS AND FACTORY SIDE GWB TO TO UNDERSIDE OF DECKING.
	3	INTERIOR - 6" 20 GAUGE METAL STUD @ 16" OC, 5/8" GYPSUM WALL BOARD BOTH SIDES, R-19 BATT INSULATION TO 12'-0", EXTEND TO 12'-0" HGT. U.N.O.
	4	EXTERIOR - PEMB WALL W/ ENDURAMAX QUIK-BRIK SYSTEM. SEE WALL DETAIL A-3.
	5	EXTERIOR - PEMB WALL.
	6	INTERIOR - 6" 20 GAUGE METAL STUD @ 16" O.C. W/ FR PLYWOOD TO 8'-0" AFF AND GYPSUM BOARD ABOVE ON EACH SIDE . EXTEND TO ROOF.

June 1, 2020

To Whom It May Concern:

Our Architect has informed us that, based on the occupant load of the building and the requirements of the 2018 NC Plumbing Code, the fixture count of the building we are planning to build would be far greater than what we need. The calculated occupant load is 88 persons in the Factory-Industrial area, 7 persons in the Business area, and 1 person in the F-1 Storage area for a total calculated occupant load of 96 persons. This is a significantly higher occupant load than we ever anticipate having in the space. We currently employ 2 persons, and do not anticipate ever having more than 10 employees and/or customers at this location at any time. **Per Section 403.6 of the 2018 North Carolina Plumbing Code, we respectfully request that the occupant load be adjusted to reflect a count of no more than 10 persons as it relates to plumbing fixture count.** We will certify that at no time will more than 10 persons be in the Building

Sincerely:

Carla Trepper

Carla Trepper
JC Powder Coating

919-375-2930
jcpowdercoating922@gmail.com

TONY L. JOHNSON ARCHITECT, P.A.
REGISTERED ARCHITECTURAL CORPORATION
51220
NORTH CAROLINA
CLAYTON, NC

TONY LEE JOHNSON
REGISTERED ARCHITECT
4296
NORTH CAROLINA
CLAYTON, NC

7/23/2020

REVISIONS	
NUMBER	DATE

JC POWDER COATING
220 PROGRESS DRIVE, FUQUAY-VARINA, NC

919-550-7717
Tony@TonyJohnsonArchitect.com
104 North Lombard St
Clayton, NC 27520
TonyJohnsonArchitect.com
TONY JOHNSON ARCHITECTURE

DATE 7/23/2020
11:16:54 AM

PROJECT # 2020.021

FLOOR PLAN

SHEET A-2

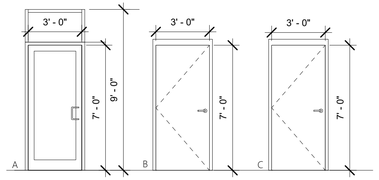

1 DOOR TYPES
1/4" = 1'-0"

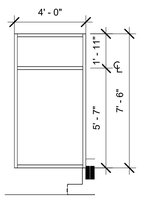

2 WINDOW TYPES
1/4" = 1'-0"

DOOR SCHEDULE

MARK	DOOR W	DOOR H	ELEVATIONS	DOOR TYPE	DOOR FINISH	DOOR FRAME	DOOR FRAME FINISH	CLOSER	HARDWARE	COMMENTS
100	3' - 0"	7' - 0"	A	STOREFRONT ALUMINUM / GLASS	ANODIZED	ALUMINUM	ANODIZED	YES	MANUFACTURERS STANDARD PUSH/PULL W/ DEADBOLT	TRANSOM ABOVE
101A	3' - 0"	7' - 0"	B	SOLID CORE WOOD	STAIN	METAL	PAINTED	NO	LEVER HANDLE	
101B	3' - 0"	7' - 0"	B	SOLID CORE WOOD	STAIN	METAL	PAINTED	YES	LEVER HANDLE	
102A	3' - 0"	7' - 0"	B	SOLID CORE WOOD	STAIN	METAL	PAINTED	NO	LEVER HANDLE	
102B	3' - 0"	7' - 0"	B	SOLID CORE WOOD	STAIN	METAL	PAINTED	YES	LEVER HANDLE	
103	3' - 0"	7' - 0"	B	SOLID CORE WOOD	STAIN	METAL	PAINTED	NO	LEVER HANDLE / PRIVACY LOCKSET	
104	3' - 0"	7' - 0"	B	SOLID CORE WOOD	STAIN	METAL	PAINTED	NO	LEVER HANDLE / PRIVACY LOCKSET	
105	3' - 0"	7' - 0"	C	INSULATED METAL	PAINT	METAL	PAINTED	NO	LEVER HANDLE	
106A	3' - 0"	7' - 0"	C	INSULATED METAL	PAINT	METAL	PAINTED	YES	LEVER HANDLE	
106B	3' - 0"	7' - 0"	C	INSULATED METAL	PAINT	METAL	PAINTED	YES	LEVER HANDLE	
OHD	14' - 0"	16' - 0"	-				-	N/A		OVERHEAD DOOR

WINDOW SCHEDULE

MARK	WIDTH	HEIGHT	OPERATION	NOTES
A	4' - 0"	7' - 6"	FIXED	STOREFRONT WINDOW

FINISH SCHEDULE

ROOM #	ROOM NAME	FLOOR FINISH	BASE FINISH	WALL FINISH	CEILING FINISH	CEILING HEIGHT	COMMENTS
100	RECEPTION	SEALED CONCRETE	RUBBER COVE BASE	PAINT	LAY-IN	10'-0"	
101	OFFICE	SEALED CONCRETE	RUBBER COVE BASE	PAINT	LAY-IN	10'-0"	
102	BREAK ROOM	SEALED CONCRETE	RUBBER COVE BASE	PAINT	LAY-IN	10'-0"	
103	RESTROOM	SEALED CONCRETE	RUBBER COVE BASE	EPOXY PAINT	LAY-IN	10'-0"	
104	RESTROOM	SEALED CONCRETE	RUBBER COVE BASE	EPOXY PAINT	LAY-IN	10'-0"	
105	POWDER STORAGE	SEALED CONCRETE	RUBBER COVE BASE	PAINT	LAY-IN	10'-0"	
106	PRODUCTION AREA	SEALED CONCRETE					

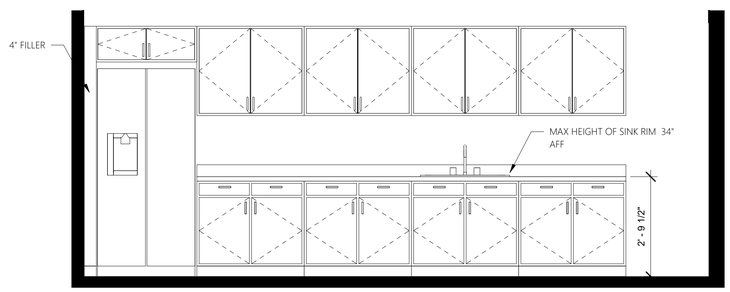

6 BREAK ROOM ELEVATION
1/2" = 1'-0"

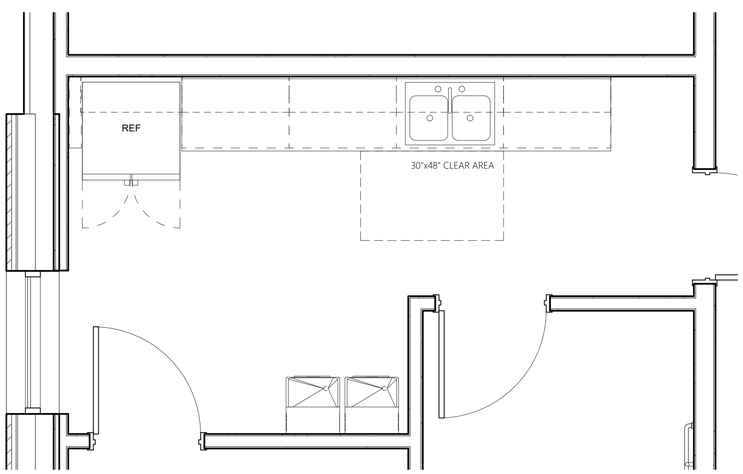

4 ENLARGED BREAKROOM PLAN
1/2" = 1'-0"

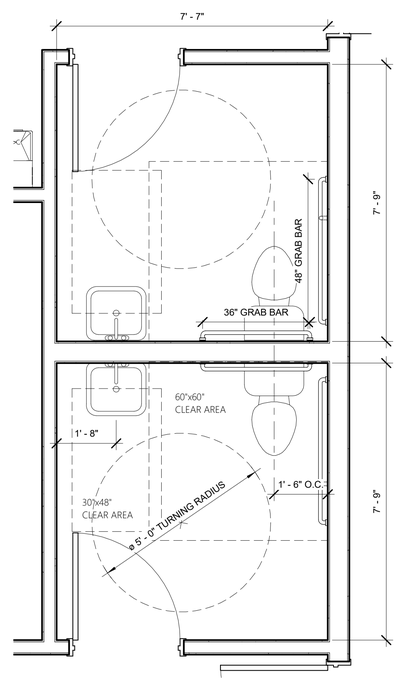

5 ENLARGED RESTROOM PLANS
1/2" = 1'-0"

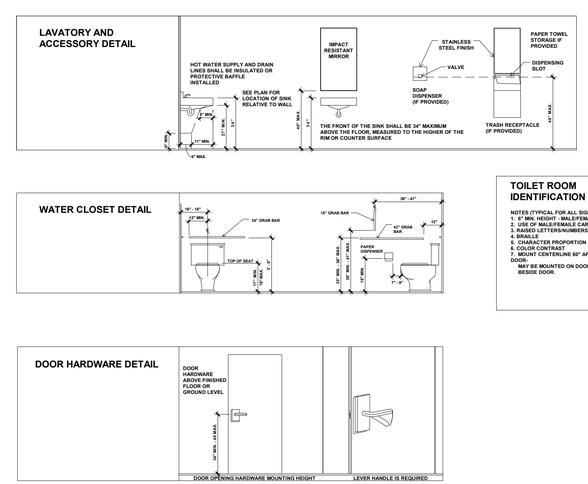

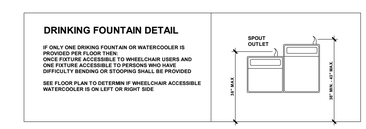

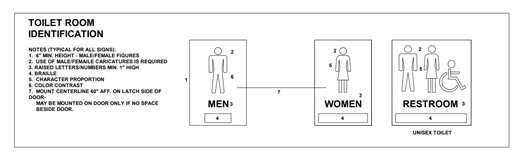

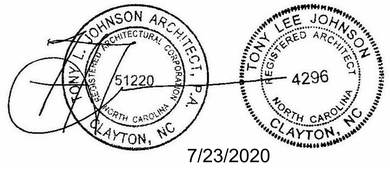

7/23/2020

REVISIONS	
NUMBER	DATE

JC POWDER COATING
220 PROGRESS DRIVE, FUQUAY-VARINA, NC

919-550-7717
Tony@TonyJohnsonArchitect.com
104 North Lombard St
Clayton, NC 27520
TonyJohnsonArchitect.com
TONY JOHNSON ARCHITECTURE

DATE 7/23/2020 11:16:57 AM

PROJECT # 2020.021

DETAILS

SHEET A-3

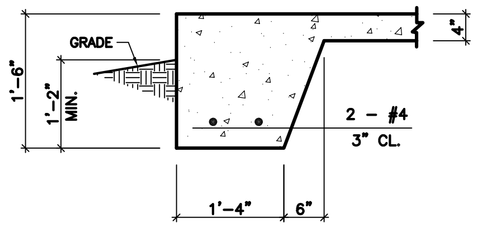

SECTION 1 / S-1
SCALE: 3/4" = 1'-0"

GENERAL NOTES

1. CONTRACTOR SHALL BE RESPONSIBLE FOR BRACING ALL WORK DURING CONSTRUCTION.
2. FOOTINGS ARE DESIGNED FOR AN ALLOWABLE BEARING CAPACITY OF 2000 P.S.F.
3. CONCRETE SHALL HAVE A MINIMUM 28 DAY COMPRESSIVE STRENGTH OF 3000 P.S.I. WITH A 4" MAXIMUM SLUMP. DETAILS NOT SHOWN SHALL BE ACCORDING TO ACI 318 AND ACI 301 SPECIFICATIONS FOR CONCRETE CONSTRUCTION.
   - REINFORCING STEEL SHALL BE ASTM A-615 GRADE 60 (TIES MAY BE GRADE 40)
   - W.W.F. SHALL BE ASTM A-185
   - MINIMUM LAP: #4 – 28", #5 – 32"
   - MINIMUM COVER: 3" U.N.O.
4. C.J. ON PLANS INDICATE CONTROL JOINT 1/8" x 1" DEEP SAWN WITHIN 24 HOURS AFTER PLACING CONCRETE. METAL JOINT MATERIAL MAY BE USED.
5. FOUNDATION BASED ON REACTIONS FURNISHED BY PEAK STEEL BUILDINGS, DRAWING NO. S2008243A, DATED 7/1/20

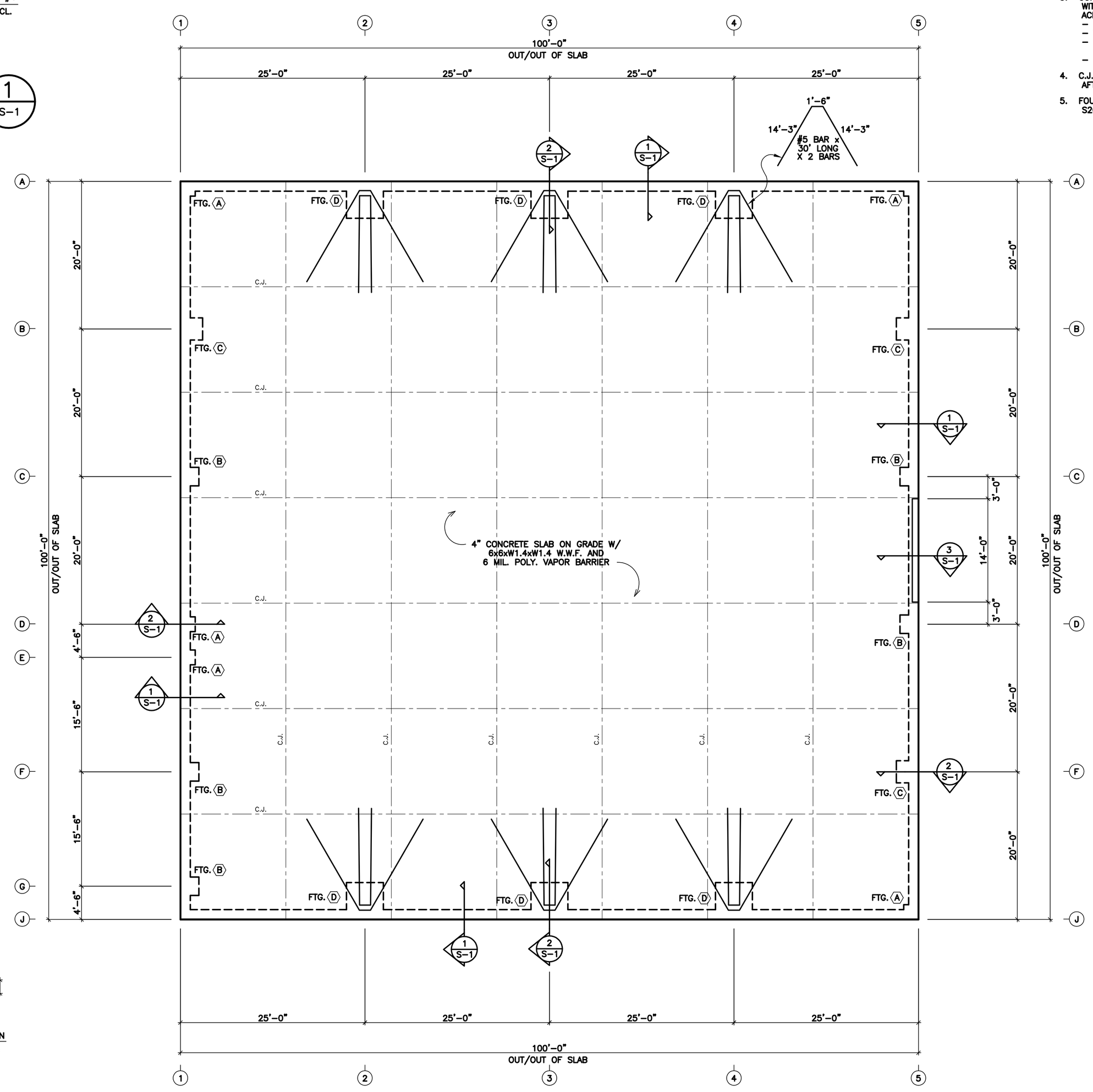

FOUNDATION PLAN
SCALE: 1/8" = 1'-0"

FOOTING SCHEDULE

TYPE	SIZE	REINFORCING
FTG. A	2'-0" x 2'-0" x 1'-6"	3 – #4 E.W.
FTG. B	2'-6" x 2'-6" x 1'-6"	4 – #4 E.W.
FTG. C	3'-0" x 3'-0" x 1'-6"	4 – #4 E.W.
FTG. D	5'-0" x 5'-0" x 2'-0"	6 – #4 E.W.

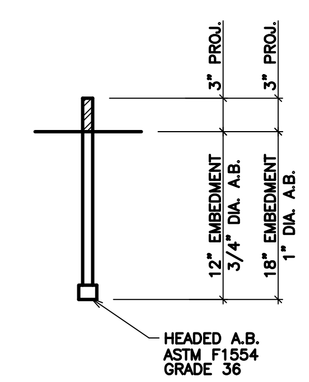

ANCHOR BOLT DETAIL

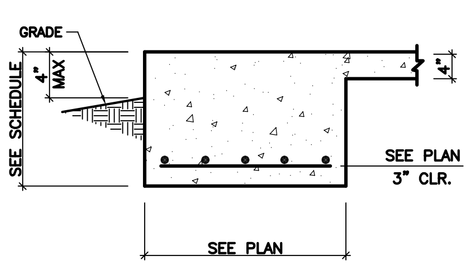

SECTION 2 / S-1
SCALE: 3/4" = 1'-0"

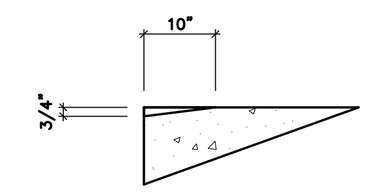

SECTION 3 / S-1
SCALE: 3/4" = 1'-0"

C.H. MOSS, P.E.
SOLE PROPRIETOR
928 BLACKLAWN RD.
CONYERS, GA 30094
PH: (770) 786-3163

SEAL 1066 NORTH CAROLINA PROFESSIONAL ENGINEER CHARLES H. MOSS 7/5/20

REVISION	BY	NO	DATE

JOB NO. S2008243A
COMPUTED BY:
DRAWN BY: NR
CHECKED BY: HM
DATE: JULY 5, 2020
SCALE: 1/8" = 1'-0"

FOUNDATION PLAN FOR:
JC POWDER COATING
FUQUAY-VARINA, NC

DRAWING NUMBER 2252

SHEET S-1 OF: 1

PEAK STEEL BUILDINGS

PROJECT NUMBER: S2008243A
PROJECT NAME: JC Powder Coating
PROJECT LOCATION: Fuquay–Varina, NC 27526
CUSTOMER: JC Powder Coating

Notes and Specifications

Building Erection Notes

1) The general contractor and/or erector is responsible to safely and properly erect the metal building system in conformance with these drawings, OSHA requirements and metal building system in conformance with these drawings, OSHA requirements and either MBMA or CSA S16 standards pertaining to proper erection. This includes, but is not limited to, the correct use of temporary guys and bracing where needed for squaring, plumbing, and securing the structural and secondary framing. Secondary wall framing members (girts or bar joists) are not designed to function as a work platform or provide safety tie–off attachment in accordance with OSHA requirements. Secondary roof framing members (purlins or bar joists) are not designed to provide safety tie–off attachment in accordance with OSHA requirements.

2) **A325 & A490 Bolt tightening requirements:**
It is the responsibility of the erector to ensure proper bolt tightness in accordance with applicable regulations. See the RCSC Specification for Structural Joints Using A325 or A490 Bolts for more information.

The following criteria may be used to determine the bolt tightness (i.e., "snug–tight" or "fully–pretensioned"), unless required otherwise by local jurisdiction or contract requirements:
A) All A490 bolts shall be "fully–pretensioned".
B) All A325 bolts in primary framing (rigid frames and bracing) may be "snug–tight", except as follows:
"Fully–pretension" A325 bolts if:
a) Building supports a crane system with a capacity greater than 5 tons.
b) Building supports machinery that creates vibration, impact or stress–reversals on the connections. The Engineer–of–Record for the project should be consulted to evaluate for this condition.
c) The project site is located in a high seismic area. For IBC–based codes, "High Seismic Area" is defined as "Seismic Design Category" of "D", "E", or "F". See the "Building Loads" section of this page for the defined seismic design category for this project.
d) Any connection designated in these drawings as "A325–SC". "Slip–Critical (SC)" connections must be free of paint, oil, or other materials that reduce friction at contact surfaces. Galvanized or lightly rusted surfaces are acceptable.
C) In Canada, all A325 and A490 bolts shall be "fully pre–tensioned", except for secondary members (purlins, girts, opening framing, etc.) and flange braces.
D) Secondary members (purlins, girts, opening framing, etc.) and flange brace connections may always be "snug–tight", unless indicated otherwise in these drawings.

3) The metal building supplier shall be notified prior to any field modifications. Modifications shall be approved by the metal building supplier before work is undertaken.
4) Common Abbreviations:
a) TYP UNO – Typical Unless Noted Otherwise
b) SLV – Short Leg Vertical
c) LLV – Long Leg Vertical
d) NS & FS – Near Side and Far Side
e) O.A.L. – Overall Length
f) SIM – Similar
g) NIC – Not In Contract
h) SL – Steel Line
i) N/A – Not Applicable
j) MBS – Metal Building Supplier
5) Construction loads shall not be placed on any structural steel framework unless such framework is safely bolted, welded, or otherwise adequately secured.
6) Purlins and girts shall not be used as an anchorage point for a fall arrest system unless written approval is obtained from the metal building supplier.
7) Purlins may only be used as a walking/working surface when installing safety systems, after all permanent bridging has been installed and fall protection is provided.
8) Construction loads may be placed only within a zone that is within 8 feet of the center line of the primary support member. CFR bundles should be placed directly over the rigid frames.
9) All lifting devices must meet OSHA or MSHA standards and in no case is it acceptable to use structural members supplied by the MBS as a spreader bar or lifting device.

General Design Notes

1) All structural steel sections and welded plate members are designed in accordance with ANSI/AISC 360 "Specifications for Structural Steel Buildings" or the CAN/CSA S16 "Limit States Design of Steel Structures", as required by the specified building code.
2) All welding of structural steel is based on either AWS D1.1 "Structural Welding Code – Steel" or CAN/CSA W59 "Welded Steel Construction (Metal Arc Welding)", as required by the specified building code.
3) All cold formed members are designed in accordance with ANSI/AISI S100 or CAN/CSA S136 "Specifications for the Design of Cold Formed Steel Structural Members", as required by the specified building code.
4) All welding of cold formed steel is based on AWS D1.3 "Structural Welding Code – Sheet Steel" or CAN/CSA W59 "Welded Steel Construction (Metal Arc Welding)", as required by the specified building code.
5) This Metal Building Supplier facility is IAS AC–472 Accredited and CAN/CSA A660 and W47.1 Certified (if applicable) for the design and manufacturing of Metal Building Systems.
6) If joists are included with this project, they are supplied as a part of the systems engineered metal building and are fabricated in accordance with the requirements of Section 1926.758 of the OSHA safety standards for steel erection, dated January 18, 2001.

Material Specifications

Plate and Flange Material:	
5" – 12" Wide, to 1 1/4" Th.	A529 Grade 55
Others	A572 Grade 50
Built–Up Structural Web	A1011 SS (or HSLAS Class 1) Grade 55
Hot–Rolled Structural	A36 or A572 Grade 50 or A992 Grade 50
Structural Tube	A500 Grade B (46 KSI)
Structural Pipe	A500 Grade B (42 KSI)
Cold–Formed Structural	A1011 or A1039 SS (or HSLAS Class 1) or A653 Grade 55
Thru–Fastened Roof Panel	A792 Grade 80
Standing Seam Roof Panel	A792 Grade 50, Class 1
All Wall Panel Profiles	A653 Grade 80, Class 1 or A792 Grade 80, Class 1
Rod Bracing	A529 Grade 50
Welds	AWS D1.1/D1.3 or CSA W59 per Building Code
High–Strength Bolts	A325 Type 1 or A490 Type 1 Heavy Hex
Machine Bolts	A307 Grade A Hex

PRIMARY AND SECONDARY STEEL PRIMER COLOR: RED
ROOF SHEETING, TYPE: SS 24 GAUGE, FINISH: Galvalume Plus
ROOF PANEL CLIP TYPE: Tall
THERMAL BLOCKS: Yes EPS FOAM SPACER: No
COMPOSITE CFR DECK, TYPE: N/A ___GAUGE, FINISH: ___
ROOF LINE TRIM, PAINTED: Dark Bronze PVDF
EXTERIOR WALL SHEETING, TYPE: CW 26 GAUGE, FINISH: Desert Sand PVDF
EXTERIOR WALL CORNER TRIM FINISH: Dark Bronze PVDF
EXTERIOR BASE TRIM, PAINTED: Desert Sand PVDF
FRAMED OPENING TRIM, PAINTED: Desert Sand PVDF
WALL FRAMED OPENING, SIZES: FSW none
BSW (1)3'–0" X 7'–0"
LEW (2) Open Bay
REW (1)3'–0" X 7'–0" (1)14'–0" X 16'–0"
INTERIOR WALL SHEETING, TYPE: ___ ___GAUGE, FINISH: ___
INTERIOR CEILING LINER, TYPE: ___ ___GAUGE, FINISH: ___
INTERIOR WALL TRIM, PAINTED: ___

YES	NO	
☒	☐	DOWNSPOUTS PAINTED: Dark Bronze PVDF GUTTERS PAINTED: Dark Bronze PVDF
☒	☐	WALKDOORS, QUANTITY: 2 PAINTED: 3070KD_
☐	☒	WINDOWS: ___ PAINTED: ___
☒	☐	INSULATION (NOT BY MBS), ROOF: 6 INCH WALLS: 4 INCH
☐	☒	CRANES (SEE CRANE PLAN FOR ADDITIONAL CRANE INFORMATION)
☐	☒	MEZZANINE (SEE MEZZANINE PLAN FOR ADDITIONAL MEZZANINE INFO)
☐	☒	WALL TRANSLUCENT PANELS: ___
☐	☒	ROOF TRANSLUCENT PANELS: ___
		INSULATED PANELS YES ☐ NO ☐
☐	☒	PIPE JACKS, SIZE: ___ QUANTITY: ___
☐	☒	ROOF FRAMED OPENINGS, SEE ROOF FRAMING PLAN FOR SIZES
☐	☒	RIDGE VENTS, 10'–0" LONG X 9" THROAT. QUANTITY: ___

FOR OCCUPANCY (RISK) CATEGORY I OR II IBC PROVISIONS INDICATE THAT SINGLE–STORY BUILDINGS SHALL HAVE "NO DRIFT LIMIT" PROVIDED THAT INTERIOR WALLS, PARTITIONS, CEILINGS OR EXTERIOR WALL SYSTEMS HAVE BEEN DESIGNED TO ACCOMMODATE THE SEISMIC STORY DRIFTS. INTERIOR WALLS, PARTITIONS, CEILINGS, OR EXTERIOR WALL SYSTEMS NOT PROVIDED BY THE METAL BUILDING MANUFACTURER SHALL BE DESIGNED AND DETAILED BY OTHERS TO ACCOMMODATE THE STORY DRIIFTS. SESIMIC DRIFT VALUES MAY BE OBTAINED FROM THE METAL BUILDING MANUFACTURER.

IF SNOW GUARDS OR OTHER DEVICES INTENDED TO HOLD SNOW AND/OR ICE ACCUMULATION ON THE ROOF SYSTEM ARE TO BE USED ON THIS PROJECT, THEY MUST BE INSTALLED UNDER THE GUIDANCE OF THE PROJECT "ENGINEER OF RECORD" (EOR), NOT THE MEDAL BUILDING MANUFACTURER, SO AS NOT TO EXCEED THE DESIGN SNOW LOAD ON THIS PROJECT.

THE SPANDREL BEAMS AND/OR SPANDREL CHANNELS SUPPORTING THE TOP OF THE MASONRY WALLS MUST BE ATTACHED TO THE WALLS WITH A SPACING NOT TO EXCEED 4'–0" O.C. (MAX.). THE SPANDRELS MUST ALSO BE RIGIDLY ATTACHED TO THE WALL NO MORE THAN 6" AWAY FROM EACH PAIR OF INTERMEDIATE STIFFENERS. THIS ATTACHMENT IS DESIGNED AND PROVIDED BY OTHERS (NOT BY THE METAL BUILDING MANUFACTURER). FIELD DRILLING OF THE SPANDRELS FOR A BOLTED CONNECTION (IF USED) WILL BE REQUIRED.

YES	NO	
	☐	☒ FASCIA, PROJECTION: ___ TOP OF FASCIA HEIGHT: ___
		FACE PANEL, TYPE: ___ ___GAUGE, FINISH: ___
		BACK PANEL, TYPE: ___ ___GAUGE, FINISH: ___
		CAP TRIM PAINTED: ___ BASE TRIM PAINTED: ___
		☐ CLOSED SYSTEM, CLEAR UNDER SOFFIT TRIM: ___
		SOFFIT PANEL, TYPE: ___ ___GAUGE, FINISH: ___
		SOFFIT TRIM AT BUILDING LINE PAINTED: ___
		☐ OPEN SYSTEM, (NO SOFFIT PANEL PROVIDED)
		CLEAR UNDER FASCIA: ___
	☐	☒ PARAPET SYSTEM
		☐ STRUCTURAL PARAPET ☐ NON–STRUCTURAL PARAPET
		TOP OF PARAPET HEIGHT: ___
		BACKER PANEL, TYPE: ___ ___GAUGE, FINISH: ___
	☐	☒ CANOPY, PROJECTION: ___
		AT EAVE LINE ☐ BELOW EAVE ☐
		ROOF PANEL, TYPE: ___ ___GAUGE, FINISH: ___
		SOFFIT PANEL, TYPE: ___ ___GAUGE, FINISH: ___
		SOFFIT TRIM AT BUILDING LINE PAINTED: ___
		CLEAR UNDER CANOPY BEAM: ___
	☐	☒ EAVE EXTENSION, PROJECTION: ___
		SOFFIT PANEL, TYPE: ___ ___GAUGE, FINISH: ___
		SOFFIT TRIM AT BUILDING LINE PAINTED: ___
	☐	☒ RAKE EXTENSION, PROJECTION: ___
		SOFFIT PANEL, TYPE: ___ ___GAUGE, FINISH: ___
		SOFFIT TRIM AT BUILDING LINE PAINTED: ___
	☐	☒ PARTITION WALL SHEETING
		PANEL TYPE: ___ ___GAUGE, FINISH: ___
		PARTITION WALL TRIM COLOR: ___
	☐	☒ WAINSCOT
		WALL PANEL, TYPE: ___ ___GAUGE, FINISH: ___
		BASE TRIM PAINTED: ___ JAMB TRIM PAINTED: ___
		TRANSITION TRIM PAINTED: ___

ERECTOR NOTE:
ALTERNATE FASTENERS HAVE BEEN SUBSTITUTED ON THIS BUILDING. WHERE THE DRAWINGS INDICATE AN H1040 STRUCTURAL FASTENER, H1041 FASTENERS WITH WASHERS HAVE BEEN SUPPLIED. WHERE THE DRAWINGS INDICATE AN H1060 TRIM FASTENER, H1061 FASTENERS WITH WASHERS HAVE BEEN SUPPLIED.

ACCESSORIES (DOORS, WINDOWS, ETC.) NOT PROVIDED BY THE METAL BUILDING MANUFACTURER MUST BE DESIGNED AS "COMPONENTS AND CLADDING" IN ACCORDANCE WITH THE SPECIFIC WIND PROVISIONS OF THE REFERENCED BUILDING CODE DISPLAYED ON THE COVER PAGE OF THIS DRAWING PACKET.

THE BUILDING CODE REQUIRES CONSIDERATION OF SNOW SURCHARGES FOR ANY LOWER ROOF OF A STRUCTURE LOCATED WITHIN 20 ft. OF A HIGHER STRUCTURE. INFORMATION PROVIDED TO THE METAL BUILDING MANUFACTURER DOES NOT INDICATE THE PRESENCE OF A SHADOWING STRUCTURE WITHIN THIS 20 ft. ENVELOPE, THEREFORE SNOW SURCHARGES HAVE NOT BEEN CONSIDERED IN THE DESIGN.

THE WALL SYSTEM BY OTHERS MUST WEIGH NO MORE THAN 45 PSF.

THE FRAMED OPENINGS HAVE BEEN DESIGNED TO SUPPORT WIND LOAD NORMAL TO THE WALL BASED ON THE STANDARD BUILDING CODE CRITERIA. FRAMED OPENINGS HAVE NOT BEEN DESIGNED FOR ANY ADDITIONAL MOMENT OR CATENARY FORCES FROM THE DOOR. ANY CHANGE TO THE INFORMATION SHOWN HERE WILL REQUIRE AN ENGINEERING INVESTIGATION AND POSSIBLE BUILDING REINFORCEMENT.

BUILDING LOADS

DESIGN CODE: NCBC 18
ROOF LIVE LOAD: 20.00 PSF MBMA OCC. CLASS: II
LIVE LOAD REDUCIBLE Yes
GROUND SNOW LOAD: 15.0 PSF SNOW EXP. FACTOR, Ce: 1.0000
SNOW IMPORTANCE FACTOR, Is: 1.00

WIND: 117 / 91 MPH
(Vult) / (Vasd)

C & C PRESSURES (PSF): 23 / –30
EXPOSURE: B
UL 90 NO
Classic Roof–Const. No. **161** ; **Classic** Roof w/ Translucent Panel–Const. No. **167**
CFR Roof–Const. No. **552** ; **CFR** Roof w/ Translucent Panel–Const. No. **590** ;
Composite CFR Roof–Const. No. **552A** ; **VR16 II** Roof–Const. No. **332** .
SEISMIC INFORMATION Ss: 0.175 S1: 0.084
Design Sds/Sd1: 0.187 / 0.134 Site Class: D
Seismic Imp. Factor: 1.00 Seismic Design Category: C
Analysis Procedure: Equivalent Lateral Force Method
Basic SFRS: Not Detailed for Seismic

NOTES:
1) COLLATERAL DEAD LOADS, UNLESS OTHERWISE NOTED, ARE ASSUMED TO BE UNIFORMLY DISTRIBUTED. WHEN SUSPENDED SPRINKLER SYSTEMS, LIGHTING, HVAC EQUIPMENT, CEILINGS, ETC., ARE SUSPENDED FROM ROOF MEMBERS, CONSULT THE M.B.S. IF THESE CONCENTRATED LOADS EXCEED 500 POUNDS (USING THE WEB MOUNT DETAIL) OR 200 POUNDS (USING THE FLANGE MOUNT DETAIL), OR IF INDIVIDUAL MEMBERS ARE LOADED SIGNIFICANTLY MORE THAN OTHERS.

2) THE DESIGN OF STRUCTURAL MEMBERS SUPPORTING GRAVITY LOADS IS CONTROLLED BY THE MORE CRITICAL EFFECT OF ROOF LIVE LOAD OR ROOF SNOW LOAD, AS DETERMINED BY THE APPLICABLE CODE.

3) Pm IS BASED ON THE MINIMUM ROOF SNOW LOAD CALCULATED PER BUILDING CODE OR THE CONTRACT SPECIFIED SNOW LOAD, WHICHEVER IS GREATER. THIS VALUE, Pm, IS ONLY APPLIED IN COMBINATION WITH THE DEAD AND COLLATERAL LOADS. ROOF SNOW IN OTHER LOADING CONDITIONS IS DETERMINED PER THE SPECIFIED BUILDING CODE.

	BUILDING
ROOF DEAD (PSF):	3.00
PRI. COL. (PSF):	3.00
SEC. COL. (PSF):	3.00
SNOW Ct:	1.00
SNOW Cs:	1.00
ROOF SNOW Ps (PSF):	10.50
ROOF SNOW Pm (PSF):	15.00
WIND ENCLOSURE:	Closed
GCpi:	+/–0.18
SEISMIC R:	3
SEISMIC Cs:	0.062
BASE SHEAR (KIPS):	7.00

ERECTION MANUALS REQUIRED
(ERECTION MANUALS ARE SHIPPED WITH THE BUILDING IN A WAREHOUSE PACKING CRATE)

☐ CFR ROOF	☐ H9600 OR ☐ H8250	☐ SINGLE CURB (H9850)
☒ CLASSIC ROOF	☐ H9420 OR ☒ H8201	☐ DOUBLE CURB (H9800)
		☐ VR16 II (H9925)

DRAWING INDEX

COVERSHEET C1
ANCHOR BOLT DRAWINGS F1, F2
COLUMN BASE REACTIONS R1
STRUCTURAL/SHEETING DRAWINGS E1 – E7
DETAILS

ISSUE	DWN	CHK	ENG	PE	DATE
PERMITS	MBS	DAW	KI	JDB	7/1/2020

PEAK STEEL BUILDINGS
PO BOX 1275
MADISON, GA 30650
PHONE: (844) 333–PEAK
FAX: (706) 343–1968

PROJECT NAME: JC POWDER COATING 220 PROGRESS DRIVE, FUQUAY-VARINA, NC 27526
CUSTOMER NAME: JC POWDER COATING NEW HILL, NC 27562
JOB NUMBER: S20O8243A
SHEET TITLE

NORTH CAROLINA PROFESSIONAL SEAL 044221 ENGINEER JEFFREY D. BOX
07/01/2020

This seal pertains only to the materials designed and supplied by the Metal Building Manufacturer. The drawings and the metal buildings which they represent are the product of the Metal Building Manufacturer. The registered professional engineer whose seal appears on these drawings is employed by the Metal Building Manufacturer and does not serve as or represent the project engineer of record and shall not be construed as such.

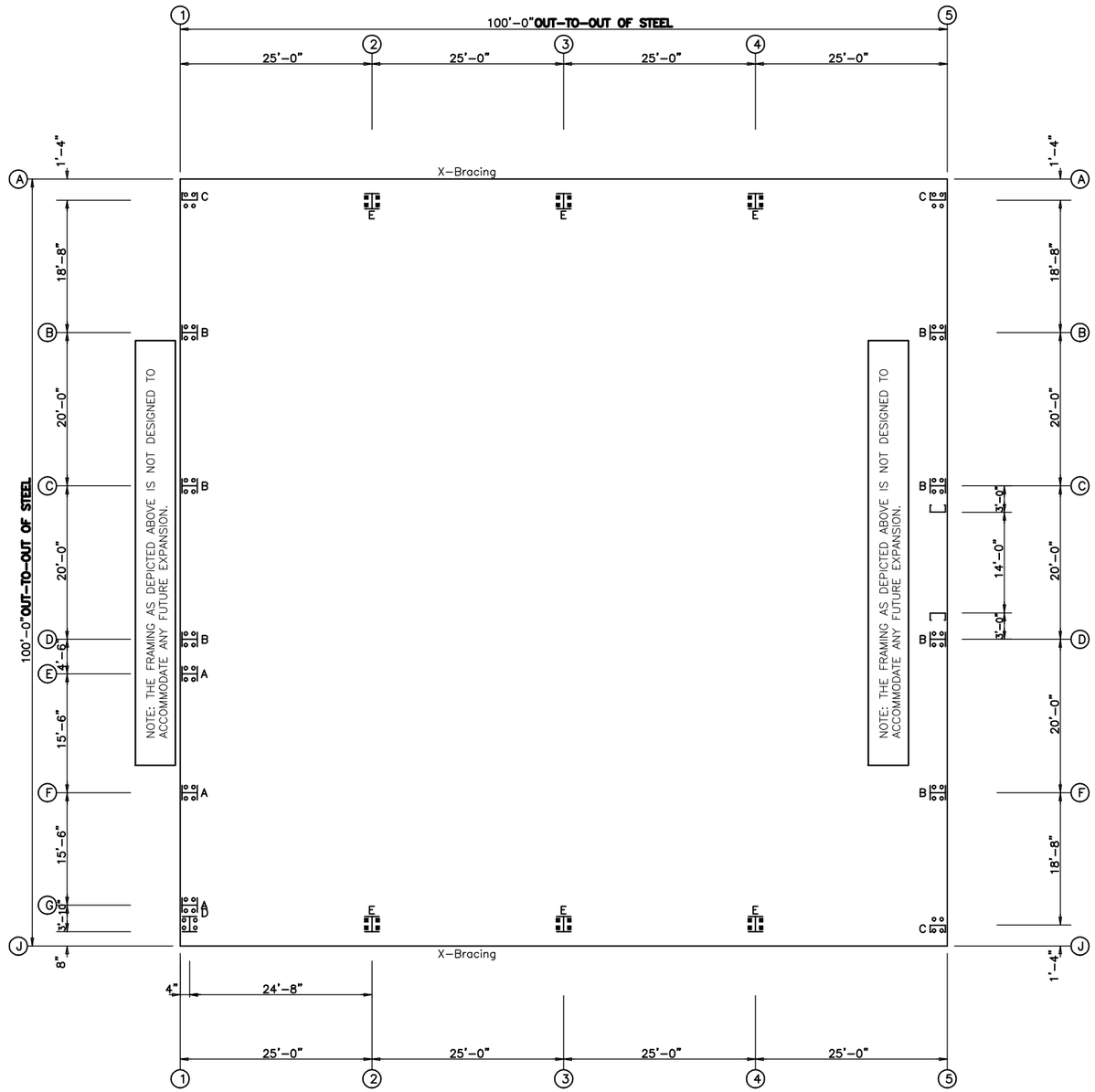

ANCHOR BOLT PLAN

NOTE: All Base Plates @ 100'-0" (U.N.)

○ **Dia=** 3/4"

⊠ **Dia=**1"

ANCHOR BOLT SUMMARY

	Qty	Locate	Dia (in)	Type	Proj (in)
○	56	Endwall	3/4"	F1554	3.00
⊠	24	Frame	1"	F1554	3.00

ANCHOR BOLT PLAN

GENERAL NOTES

1. THE SPECIFIED ANCHOR ROD DIAMETER ASSUMES F1554 GRADE 36 UNLESS NOTED OTHERWISE. ANCHOR ROD MATERIAL OF EQUAL DIAMETER MEETING OR EXCEEDING THE STRENGTH REQUIREMENTS SET FORTH ON THESE DRAWINGS MAY BE UTILIZED AT THE DISCRETION OF THE FOUNDATION DESIGN ENGINEER. ANCHOR ROD EMBEDMENT LENGTH SHALL BE DETERMINED BY THE FOUNDATION DESIGN ENGINEER.
2. METAL BUILDING MANUFACTURER IS NOT RESPONSIBLE FOR PROJECT FOUNDATION DESIGN. THE FOUNDATION DESIGN IS THE RESPONSIBILITY OF A REGISTERED PROFESSIONAL ENGINEER, FAMILIAR WITH LOCAL SITE CONDITIONS.
3. ALL ANCHOR RODS, FLAT WASHERS FOR ANCHOR RODS, EXPANSION BOLTS, AS WELL AS ALL CONCRETE/MASONRY EMBEDMENT PLATES ARE NOT BY METAL BUILDING MANUFACTURER.
4. THIS DRAWING IS NOT TO SCALE.
5. FINISHED FLOOR ELEVATION = 100'-0" UNLESS NOTED OTHERWISE.
6. "SINGLE" CEE COLUMNS SHALL BE ORIENTED WITH THE "TOES" TOWARD THE LOW EAVE UNLESS NOTED OTHERWISE.
7. ANCHOR RODS ARE REQUIRED ONLY IN THE QUANTITIES SPECIFIED. BASEPLATES MAY BE FABRICATED WITH MORE HOLES THAN NEEDED FOR THIS PROJECT.
8. THE ANCHOR BOLT LOCATIONS PROVIDED BY METAL BUILDING MANUFACTURER SATISFY PERTINENT REQUIREMENTS FOR THE DESIGN OF THE MATERIALS SUPPLIED BY THE METAL BUILDING MANUFACTURER. PLEASE NOTE THAT THESE REQUIREMENTS MAY NOT SATISFY ALL ANCHOR BOLT CONCRETE EDGE DISTANCE REQUIREMENTS DEPENDING ON THE DETAILS OF THE FOUNDATION DESIGN.
   BECAUSE FOUNDATION DESIGN IS NOT WITHIN THE METAL BUILDING MANUFACTURER'S SCOPE OF WORK, IT IS THE RESPONSIBILITY OF THE QUALIFIED PROFESSIONAL DESIGNING THE FOUNDATION TO MAKE CERTAIN THAT SUFFICIENT CONCRETE EDGE DISTANCE IS PROVIDED FOR THE ANCHOR BOLTS IN THE DETAILS OF THE FOUNDATION DESIGN.

ISSUE	DWN	CHK	ENG	PE	DATE
PERMITS	MBS	DAW	KI	JDB	7/1/2020

PEAK STEEL BUILDINGS
PO BOX 1275
MADISON, GA 30650
PHONE:
(844) 333-PEAK
FAX:
(706) 343-1968

PROJECT NAME
JC POWDER COATING
220 PROGRESS DRIVE, FUQUAY-VARINA, NC 27526

CUSTOMER NAME
JC POWDER COATING
NEW HILL, NC 27562

JOB NUMBER
S20O8243A

SHEET TITLE

NORTH CAROLINA PROFESSIONAL SEAL 044221 ENGINEER JEFFREY D. BOX
07/01/2020

This seal pertains only to the materials designed and supplied by the Metal Building Manufacturer. The drawings and the metal buildings which they represent are the product of the Metal Building Manufacturer. The registered professional engineer whose seal appears on these drawings is employed by the Metal Building Manufacturer and does not serve as or represent the project engineer of record and shall not be construed as such.

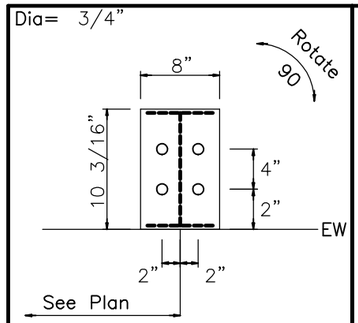

DETAIL A

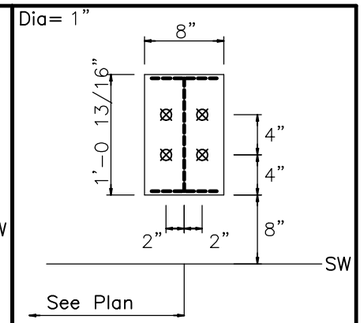

DETAIL E

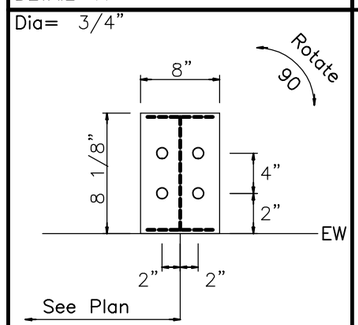

DETAIL B

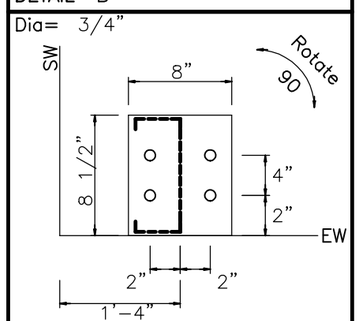

DETAIL C

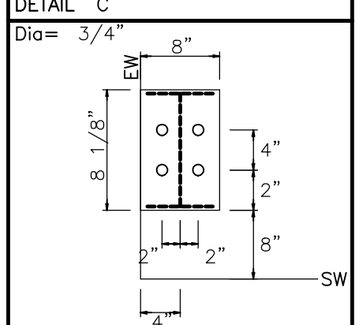

DETAIL D

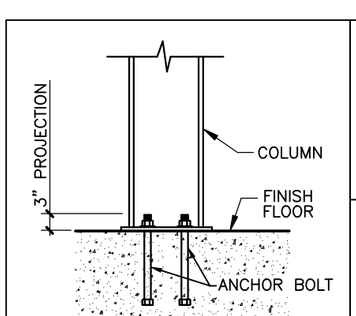

TYPICAL COLUMN BASE PLATE DETAIL

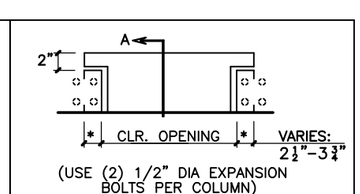

(USE (2) 1/2" DIA EXPANSION BOLTS PER COLUMN)

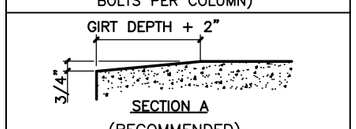

(RECOMMENDED)
TYPICAL OVERHEAD DOOR FRAMED OPENING

FOUNDATION DESIGN NOTES:

1. THE ORIENTATION OF THE ANCHOR BOLT DETAILS SHOWN ON THIS PAGE MAY NOT COINCIDE WITH THE ACTUAL COLUMN ORIENTATION SHOWN ON THE ANCHOR BOLT DRAWING. PLEASE REFERENCE THE SIDEWALL (SW) AND ENDWALL (EW) STEEL LINES SHOWN ON THE ANCHOR BOLT DETAILS WITH THE ANCHOR BOLT PLAN DURING LAYOUT OF COLUMN AND ANCHOR BOLT LOCATIONS.

2. COLUMN BASE PLATES MAY HAVE MORE HOLES THAN ARE REQUIRED DUE TO PRODUCTION LIMITATIONS. PLEASE FOLLOW ANCHOR BOLT DETAILS FOR QUANTITY OF ANCHOR BOLTS REQUIRED. EXTRA BASE PLATE HOLES DO NOT NEED INFILLED PER THE MBS DESIGN SPECIFICATIONS.

ISSUE	DWN	CHK	ENG	PE	DATE
PERMITS	MBS	DAW	KI	JDB	7/1/2020

PEAK STEEL BUILDINGS
PO BOX 1275
MADISON, GA 30650
PHONE:
(844) 333-PEAK
FAX:
(706) 343-1968

PROJECT NAME
JC POWDER COATING
220 PROGRESS DRIVE, FUQUAY-VARINA, NC 27526

CUSTOMER NAME
JC POWDER COATING
NEW HILL, NC 27562

SHEET TITLE

JOB NUMBER
S20O8243A

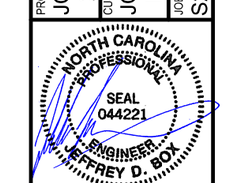

07/01/2020

This seal pertains only to the materials designed and supplied by the Metal Building Manufacturer. The drawings and the metal buildings which they represent are the product of the Metal Building Manufacturer. The registered professional engineer whose seal appears on these drawings is employed by the Metal Building Manufacturer and does not serve as or represent the project engineer of record and shall not be construed as such.

SHEET

F2 of 2

FRAME LINES: 2 3 4

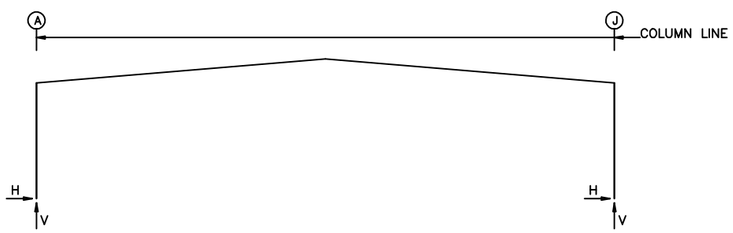

RIGID FRAME: ANCHOR BOLTS & BASE PLATES

Frm Line	Col Line	Anc._Bolt Qty	Anc._Bolt Dia	Base_Plate (in) Width	Base_Plate (in) Length	Base_Plate (in) Thick	Elev. (in)
2*	A	4	1.000	8.000	12.81	0.375	0.0
2*	J	4	1.000	8.000	12.81	0.375	0.0

2* Frame lines: 2 3 4

ENDWALL COLUMN: ANCHOR BOLTS & BASE PLATES

Frm Line	Col Line	Anc._Bolt Qty	Anc._Bolt Dia	Base_Plate (in) Width	Base_Plate (in) Length	Base_Plate (in) Thick	Elev. (in)
1	A	4	0.750	8.000	8.500	0.375	0.0
1	B	4	0.750	8.000	8.125	0.375	0.0
1	C	4	0.750	8.000	8.125	0.375	0.0
1	D	4	0.750	8.000	8.125	0.375	0.0
1	E	4	0.750	8.000	10.19	0.375	0.0
1	F	4	0.750	8.000	10.19	0.375	0.0
1	G	4	0.750	8.000	10.19	0.375	0.0
1	J	4	0.750	8.000	8.125	0.375	0.0
5	J	4	0.750	8.000	8.500	0.375	0.0
5	F	4	0.750	8.000	8.125	0.375	0.0
5	D	4	0.750	8.000	8.125	0.375	0.0
5	C	4	0.750	8.000	8.125	0.375	0.0
5	B	4	0.750	8.000	8.125	0.375	0.0
5	A	4	0.750	8.000	8.500	0.375	0.0

GENERAL NOTES

1. ALL LOADING CONDITIONS ARE EXAMINED. THE MAXIMUM AND MINIMUM HORIZONTAL (H) AND VERTICAL (V) REACTIONS AND THE CORRESPONDING VERTICAL (V) OR HORIZONTAL (H) REACTIONS ARE REPORTED.
2. REACTIONS ARE PROVIDED BY LOAD CASE IN ORDER TO AID THE FOUNDATION ENGINEER IN DETERMINING THE APPROPRIATE LOAD FACTORS AND COMBINATION TO BE USED WITH EITHER WORKING STRESS OR ULTIMATE STRENGTH DESIGN METHODS. WIND LOAD CASES ARE GIVEN FOR EACH PRIMARY WIND DIRECTION.
3. FOR ASCE7-10 AND LATER BASED BULDING CODES THE UNFACTORED LOAD CASE REACTIONS DUE TO WIND ARE GENERATED USING ULTIMATE DESIGN WIND SPEEDS (Vult).
4. POSITIVE (+) REACTIONS ARE AS SHOWN ABOVE. FOUNDATION LOADS ARE IN OPPOSITE DIRECTIONS.
5. BRACING REACTIONS ARE IN THE PLANE OF THE BRACE WITH THE HORIZONTAL REACTION (H) ACTING AWAY FROM THE BRACED BAY AND THE VERTICAL REACTION (V) ACTING DOWNWARD.

****** RIGID FRAME LOAD CASE ABBREVIATIONS: ******
Wind_L1/Wind_R1: LATERAL WIND FROM THE LEFT/RIGHT, CASE 1
Wind_L2/Wind_R2: LATERAL WIND FROM THE LEFT/RIGHT, CASE 2
Wind_Ln1/Wind_Ln2: LONGITUDINAL WIND, CASE 1/2
Seismic_L/Seismic_R: LATERAL SEISMIC LOAD FROM LEFT/RIGHT
LWIND#_L#E/LWIND#_R#E: LONGITUDINAL WIND EDGE ZONES
F#UNB_SL_L/F#UNB_SL_R: UNBALANCED ROOF SNOW WITH WIND FROM LEFT/RIGHT
F#PAT_LL #/F#PAT_SL #: PARTIAL LIVE/SNOW LOADING FOR CONTINUOUS BEAM SYSTEMS

****** ENDWALL COLUMN LOAD CASE ABBREVIATIONS: ******
Collat: COLLATERAL LOAD
Rafter Wind_L/Rafter Wind_R: LATERAL WIND FROM THE LEFT/RIGHT
Brace Wind_L/Brace Wind_R: LATERAL WIND FROM THE LEFT/RIGHT
Wind_P/Wind_S: LONGITUDINAL WIND PRESSURE/SUCTION ON COLUMNS
Wind_Ln: LONGITUDINAL WIND SUCTION ON ROOF
Seis_L/Seis_R: LATERAL SEISMIC LOAD FROM LEFT/RIGHT
E#UNB_SL_L/E#UNB_SL_R: UNBALANCED ROOF SNOW WITH WIND FROM LEFT/RIGHT
E#PAT_LL #/E#PAT_SL #: PARTIAL LIVE/SNOW LOADING FOR CONTINUOUS BEAM SYSTEMS

RIGID FRAME: BASIC COLUMN REACTIONS (k)

Frame Line	Column Line	Dead Horiz	Dead Vert	Collateral Horiz	Collateral Vert	Live Horiz	Live Vert	Snow Horiz	Snow Vert	Wind_Left1 Horiz	Wind_Left1 Vert	Wind_Right1 Horiz	Wind_Right1 Vert
2*	A	4.6	6.3	3.2	4.0	12.9	15.7	11.3	13.8	-20.9	-23.0	-9.0	-15.8
2*	J	-4.6	6.3	-3.2	4.0	-12.9	15.7	-11.3	13.8	9.0	-15.8	20.9	-23.0

Frame Line	Column Line	Wind_Left2 Horiz	Wind_Left2 Vert	Wind_Right2 Horiz	Wind_Right2 Vert	Wind_Long1 Horiz	Wind_Long1 Vert	Wind_Long2 Horiz	Wind_Long2 Vert	Seismic_Left Horiz	Seismic_Left Vert	Seismic_Right Horiz	Seismic_Right Vert
2*	A	-15.5	-13.2	-3.6	-6.0	-12.0	-21.5	-12.8	-17.3	-1.4	-0.5	1.4	0.5
2*	J	3.6	-6.0	15.5	-13.2	12.8	-17.3	12.0	-21.5	-1.4	0.5	1.4	-0.5

Frame Line	Column Line	MIN_SNOW Horiz	MIN_SNOW Vert	F1UNB_SL_L Horiz	F1UNB_SL_L Vert	F1UNB_SL_R Horiz	F1UNB_SL_R Vert
2*	A	16.1	19.7	10.2	14.2	10.2	8.4
2*	J	-16.1	19.7	-10.2	8.4	-10.2	14.2

2* Frame lines: 2 3 4

ENDWALL COLUMN: BASIC COLUMN REACTIONS (k)

Frm Line	Col Line	Dead Vert	Collat Vert	Live Vert	Snow Vert	Wind Left1 Vert	Wind Right1 Vert	Wind Left2 Vert	Wind Right2 Vert	Wind Press Horz	Wind Suct Horz	Wind Long1 Vert	Wind Long2 Vert
1	A	0.5	0.3	2.2	1.2	-2.6	-2.1	-1.7	-1.1	-1.8	2.2	-3.1	-1.6
1	B	1.3	0.8	5.6	2.9	-8.0	-4.2	-5.7	-2.0	-3.8	4.2	-7.5	-4.8
1	C	1.3	0.8	5.4	2.8	-5.9	-3.6	-4.1	-1.8	-4.2	4.6	-5.9	-3.6
1	D	1.4	0.9	6.1	3.2	-2.8	-4.1	-1.5	-2.7	-2.6	2.8	-2.9	-3.9
1	E	0.3	0.0	-0.3	-0.2	-1.0	-2.3	-0.4	-1.7	-0.5	0.5	-0.9	-2.4
1	F	1.3	0.7	4.6	2.4	-3.2	-5.6	-1.6	-3.9	0.0	0.0	-3.3	-5.6
1	G	1.0	0.5	3.4	1.8	-2.5	-4.9	-1.2	-3.6	-0.3	0.4	-3.0	-4.4
1	J	0.1	-0.1	-0.3	-0.2	-0.2	0.6	-0.2	0.5	-0.5	0.6	0.3	0.0

Frm Line	Col Line	Seis Left Vert	Seis Right Vert	MIN_SNOW Horz	MIN_SNOW Vert	E1UNB_SL_L Horz	E1UNB_SL_L Vert	E1UNB_SL_R Horz	E1UNB_SL_R Vert
1	A	0.0	0.1	0.0	1.7	0.0	1.1	0.0	0.7
1	B	-0.1	0.0	0.0	4.2	0.0	3.6	0.0	0.8
1	C	0.0	0.0	0.0	4.1	0.0	4.3	0.0	1.0
1	D	0.0	0.0	0.0	4.5	0.0	1.2	0.0	3.3
1	E	0.0	0.0	0.0	-0.2	0.0	-0.2	0.0	1.2
1	F	0.0	0.0	0.0	3.4	0.0	0.7	0.0	2.3
1	G	0.0	-0.1	0.0	2.6	0.0	0.5	0.0	2.1
1	J	0.1	0.0	0.0	-0.3	0.0	0.2	0.0	-0.2

Frm Line	Col Line	Dead Vert	Collat Vert	Live Vert	Snow Vert	Wind Left1 Vert	Wind Right1 Vert	Wind Left2 Vert	Wind Right2 Vert	Wind Press Horz	Wind Suct Horz	Wind Long1 Vert	Wind Long2 Vert
5	J	0.5	0.3	2.0	1.2	-2.7	-1.9	-1.7	-1.0	-1.8	2.2	-3.0	-1.6
5	F	1.3	0.8	5.2	2.9	-7.8	-4.2	-5.6	-2.0	-3.7	4.1	-7.4	-4.5
5	D	1.3	0.8	5.3	2.9	-6.0	-3.7	-4.2	-1.8	-4.1	4.5	-6.0	-3.7
5	C	1.3	0.8	5.3	2.9	-3.7	-6.0	-1.8	-4.2	-4.1	4.5	-3.7	-6.0
5	B	1.3	0.8	5.2	2.9	-4.2	-7.8	-2.0	-5.6	-3.7	4.1	-4.5	-7.4
5	A	0.5	0.3	2.0	1.2	-1.9	-2.7	-1.0	-1.7	-1.8	2.2	-1.6	-3.0

Frm Line	Col Line	Seis Left Vert	Seis Right Vert	MIN_SNOW Horz	MIN_SNOW Vert	E2UNB_SL_L Horz	E2UNB_SL_L Vert	E2UNB_SL_R Horz	E2UNB_SL_R Vert	E2PAT_LL_1 Horz	E2PAT_LL_1 Vert	E2PAT_LL_2 Horz	E2PAT_LL_2 Vert
5	J	0.0	0.0	0.0	1.7	0.0	1.1	0.0	0.6	0.0	2.5	0.0	-0.3
5	F	0.0	0.0	0.0	4.1	0.0	3.4	0.0	0.8	0.0	2.1	0.0	3.2
5	D	0.0	0.0	0.0	4.2	0.0	4.4	0.0	1.0	0.0	2.9	0.0	2.2
5	C	0.0	0.0	0.0	4.2	0.0	1.0	0.0	4.4	0.0	2.9	0.0	2.2
5	B	0.0	0.0	0.0	4.1	0.0	0.8	0.0	3.4	0.0	2.1	0.0	3.2
5	A	0.0	0.0	0.0	1.7	0.0	0.6	0.0	1.1	0.0	2.5	0.0	-0.3

Frm Line	Col Line	E2PAT_LL_3 Horz	E2PAT_LL_3 Vert	E2PAT_LL_4 Horz	E2PAT_LL_4 Vert	E2PAT_LL_5 Horz	E2PAT_LL_5 Vert	E2PAT_LL_6 Horz	E2PAT_LL_6 Vert
5	J	0.0	2.0	0.0	-0.1	0.0	2.4	0.0	-0.6
5	F	0.0	5.8	0.0	1.9	0.0	2.3	0.0	2.9
5	D	0.0	2.3	0.0	6.3	0.0	2.3	0.0	2.9
5	C	0.0	2.9	0.0	2.3	0.0	6.3	0.0	2.3
5	B	0.0	2.9	0.0	2.3	0.0	1.9	0.0	5.8
5	A	0.0	-0.6	0.0	2.4	0.0	-0.1	0.0	2.0

BUILDING BRACING REACTIONS

Wall Loc	Wall Line	Col Line	± Reactions(k) Wind Horz	Wind Vert	Seismic Horz	Seismic Vert	Panel_Shear (lb/ft) Wind	Panel_Shear (lb/ft) Seis	Note
L_EW	1								(i)
F_SW	J	2,3	9.0	6.4	3.7	2.6			
R_EW	5								(i)
B_SW	A	3,2	9.0	6.4	3.7	2.6			

(i)Bracing in roof to rigid frame

ISSUE	DWN	CHK	ENG	PE	DATE
PERMITS	MBS	DAW	KI	JDB	7/1/2020

PEAK STEEL BUILDINGS
PO BOX 1275
MADISON, GA 30650
PHONE: (844) 333-PEAK
FAX: (706) 343-1968

PROJECT NAME
JC POWDER COATING
220 PROGRESS DRIVE, FUQUAY-VARINA, NC 27526

CUSTOMER NAME
JC POWDER COATING
NEW HILL, NC 27562

SHEET TITLE

JOB NUMBER
S20O8243A

NORTH CAROLINA PROFESSIONAL SEAL 044221 ENGINEER JEFFREY D. BOX
07/01/2020

This seal pertains only to the materials designed and supplied by the Metal Building Manufacturer. The drawings and the metal buildings which they represent are the product of the Metal Building Manufacturer. The registered professional engineer whose seal appears on these drawings is employed by the Metal Building Manufacturer and does not serve as or represent the project engineer of record and shall not be construed as such.

SHEET
R1 of 1

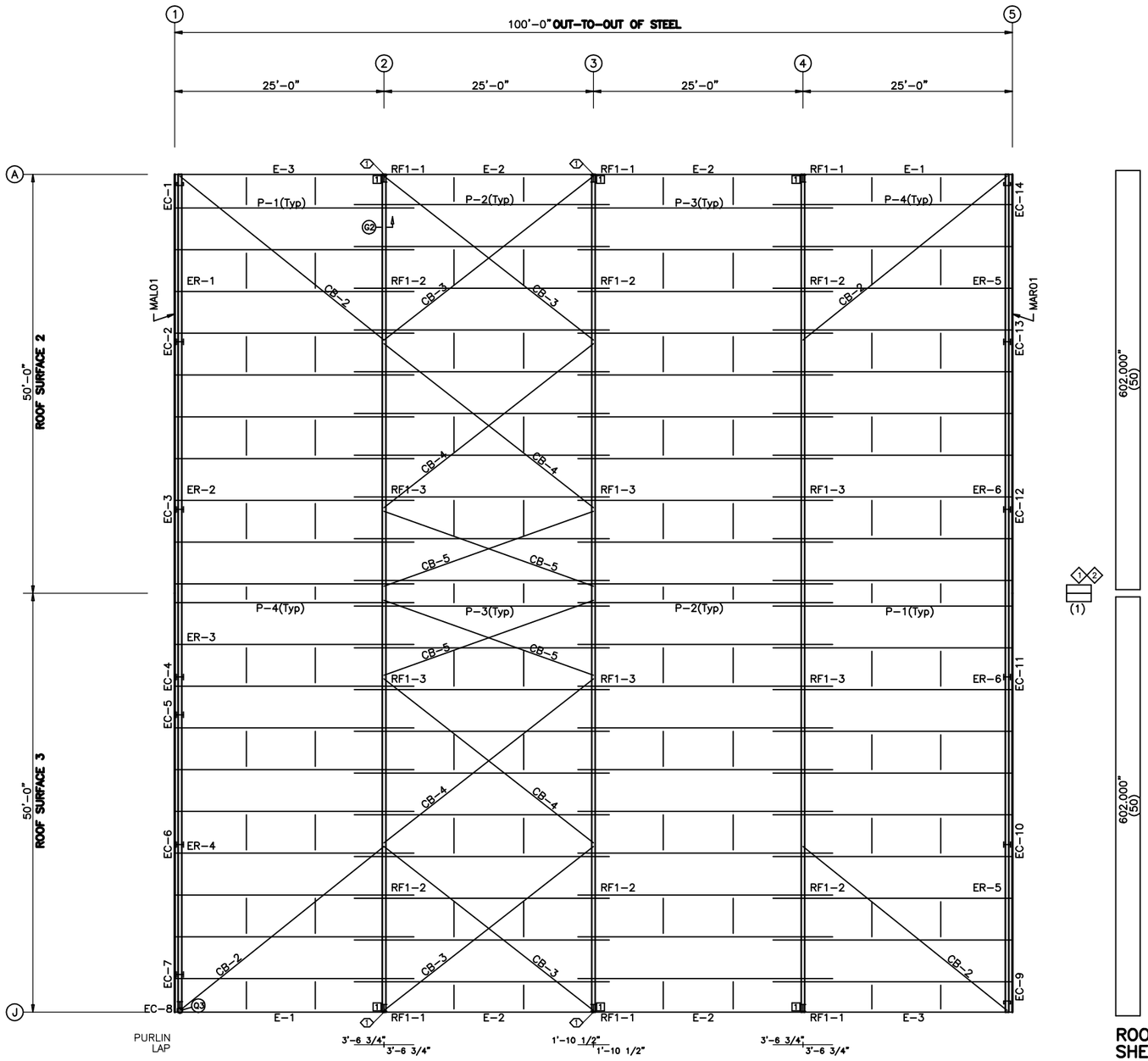

ROOF FRAMING PLAN

ROOF SHEETING

PANELS: 24 Ga. SS Galvalume Plus

SPECIAL BOLTS ROOF PLAN					
◇ ID	QUAN	TYPE	DIA	LENGTH	WASH
1	4	A325	1/2"	2"	1

TRIM TABLE ROOF PLAN			
◇ID	PART	LENGTH	DETAIL
1	RGB01	121.000	TRIM_953
2	RGB02	242.000	TRIM_953

MEMBER TABLE ROOF PLAN		
MARK	PART	LENGTH
P-1	10Z060	342.500
P-2	10Z060	365.250
P-3	10Z060	365.250
P-4	10Z060	342.500
E-1	10E060	299.625
E-2	10E060	299.750
E-3	10E060	299.625
CB-2	RDB-	370.000
CB-3	RDB-	376.000
CB-4	RDB-	381.000
CB-5	RDB-	324.000

CONNECTION PLATES ROOF PLAN	
☐ID	MARK/PART
1	ESC02

ROOF FRAMING PLAN

GENERAL NOTES

1. PLACE TAGGED END OF RAFTERS TOWARDS THE LOW EAVE.
2. STD. ROD/CABLE SIZES PER PART PREFIX ARE:

ROD		CABLE	
RDB-	= 5/8" ROD	CAA-	= 1/4" CABLE
RDC-	= 3/4" ROD	CAB-	= 3/8" CABLE
RDD-	= 7/8" ROD	CAC-	= 1/2" CABLE
RDE-	= 1" ROD		
RDF-	= 1 1/8" ROD		
RDG-	= 1 1/4" ROD		

3. PURLIN AND EAVE STRUT CONNECTIONS UTILIZE BOTH A307 AND A325 BOLTS. REFER TO THE DETAILS FOR SPECIFIC USAGE REQUIREMENTS.
4. THIS DRAWING IS NOT TO SCALE.

ISSUE	DWN	CHK	ENG	PE	DATE
PERMITS	MBS	DAW	KI	JDB	7/1/2020

PEAK STEEL BUILDINGS
PO BOX 1275
MADISON, GA 30650
PHONE:
(844) 333-PEAK
FAX:
(706) 343-1968

PROJECT NAME
JC POWDER COATING
220 PROGRESS DRIVE, FUQUAY-VARINA, NC 27526

CUSTOMER NAME
JC POWDER COATING
NEW HILL, NC 27562

JOB NUMBER
S20O8243A

SHEET TITLE

NORTH CAROLINA PROFESSIONAL SEAL 044221 ENGINEER JEFFREY D. BOX
07/01/2020

This seal pertains only to the materials designed and supplied by the Metal Building Manufacturer. The drawings and the metal buildings which they represent are the product of the Metal Building Manufacturer. The registered professional engineer whose seal appears on these drawings is employed by the Metal Building Manufacturer and does not serve as or represent the project engineer of record and shall not be construed as such.

SHEET
E1 of 7

TRIM TABLE ROOF PLAN			
◇ID	PART	LENGTH	DETAIL
1	RGB01	121.000	TRIM_953
2	RGB02	242.000	TRIM_953

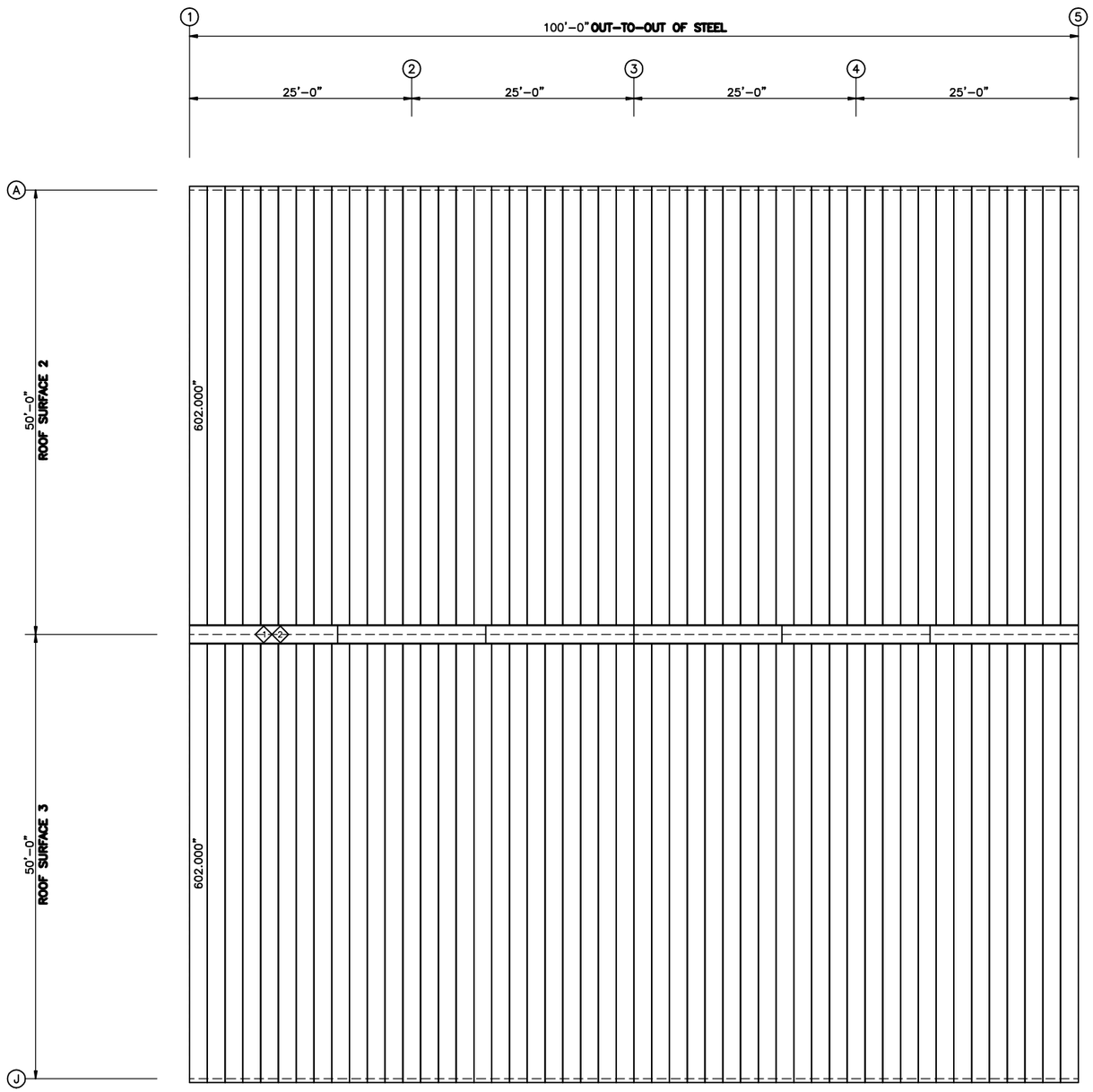

ROOF SHEETING PLAN

PANELS: 24 Ga. SS – Galvalume Plus

ISSUE	DWN	CHK	ENG	PE	DATE
PERMITS	MBS	DAW	KI	JDB	7/1/2020

PEAK STEEL BUILDINGS

PO BOX 1275
MADISON, GA 30650
PHONE:
(844) 333-PEAK
FAX:
(706) 343-1968

PROJECT NAME
JC POWDER COATING
220 PROGRESS DRIVE, FUQUAY-VARINA, NC 27526

CUSTOMER NAME
JC POWDER COATING
NEW HILL, NC 27562

JOB NUMBER
S20O8243A

SHEET TITLE

NORTH CAROLINA PROFESSIONAL SEAL 044221 ENGINEER JEFFREY D. BOX

07/01/2020

This seal pertains only to the materials designed and supplied by the Metal Building Manufacturer. The drawings and the metal buildings which they represent are the product of the Metal Building Manufacturer. The registered professional engineer whose seal appears on these drawings is employed by the Metal Building Manufacturer and does not serve as or represent the project engineer of record and shall not be construed as such.

SPLICE PLATE & BOLT TABLE									
Mark	Qty Top	Bot	Int	Type	Dia	Length	Width	Thick	Length
SP−1	4	4	0	A325	1.000	3.25	8"	1"	3'−3"
SP−2	4	4	0	A325	0.625	2.25	6"	1/2"	2'−0 3/4"
SP−3	4	4	0	A325	0.625	2.25	6"	1/2"	3'−3 3/8"

MEMBER TABLE					
Mark	Web Depth Start/End	Web Plate Thick	Web Plate Length	Outside Flange W x Thk x Length	Inside Flange W x Thk x Length
RF1−1	12.0/30.0	0.220	197.7	8 x 5/16" x 229.6	8 x 1/2" x 198.4
	30.0/30.0	0.313	34.5	8 x 5/8" x 38.1	
RF1−2	30.0/18.0	0.220	202.6	6 x 1/2" x 200.1	6 x 5/8" x 202.9
RF1−3	18.0/18.0	0.164	180.0	6 x 1/2" x 360.0	6 x 1/4" x 180.0
	18.0/32.8	0.164	180.0		6 x 1/4" x 177.9

CONNECTION PLATES	
☐ ID	Mark/Part
1	FBL&N01

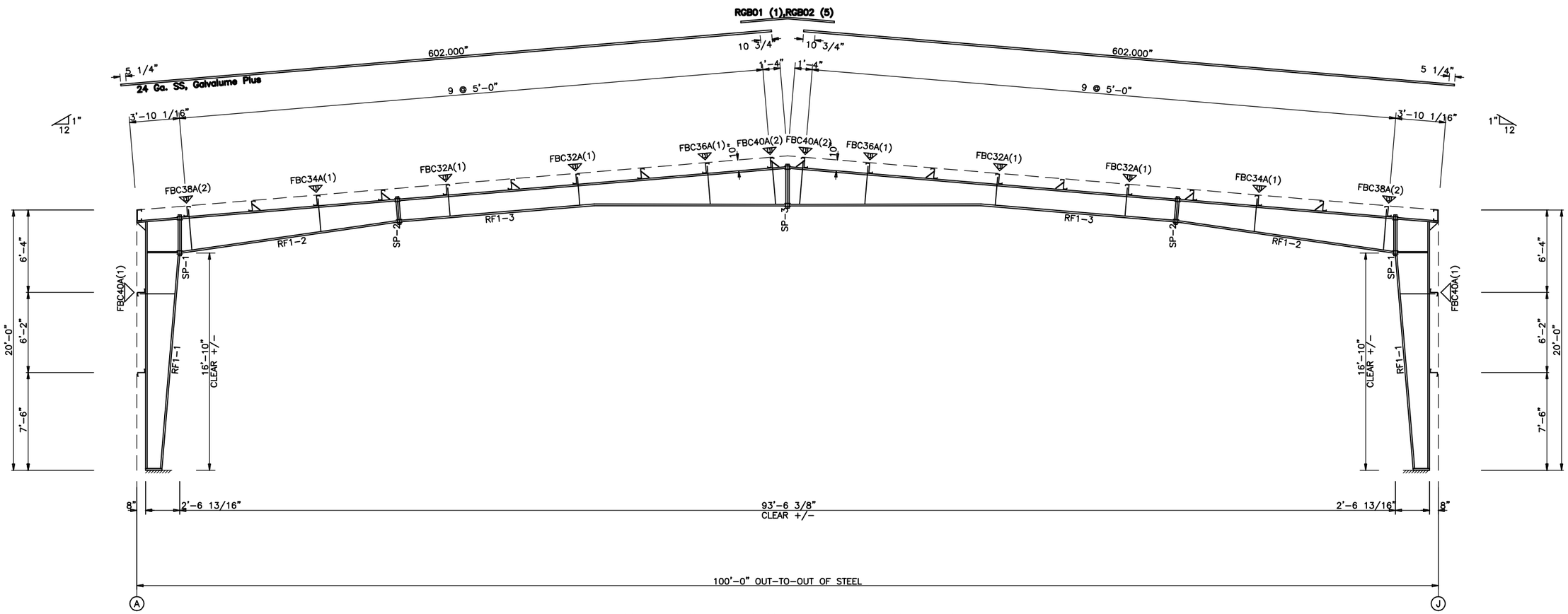

RIGID FRAME ELEVATION: FRAME LINE 2 3 4

GENERAL NOTES

1. ▽ INDICATES FLANGE BRACING LOCATIONS. (1) = ONE SIDE; (2) = TWO SIDES.
2. IF FLANGE BRACING IS REQUIRED ON BOTH SIDES OF AN EXPANDABLE RIGID FRAME, THE OPPOSITE SIDE FLANGE BRACES WILL HAVE TO BE INSTALLED AT THE TIME OF FUTURE EXPANSION. THESE FLANGE BRACES HAVE BEEN PROVIDED, AS REQUIRED, FOR THIS FUTURE CONDITION.
3. RIGID FRAMES SHALL HAVE 50% OF THEIR BOLTS INSTALLED AND TIGHTENED ON BOTH SIDES OF THE WEB ADJACENT TO EACH FLANGE BEFORE THE HOISTING EQUIPMENT IS RELEASED.
4. INTERIOR COLUMN METAL TAG IS ORIENTED TOWARD THE LOW EAVE OF THE BUILDING.

ISSUE	DWN	CHK	ENG	PE	DATE
PERMITS	MBS	DAW	KI	JDB	7/1/2020

PEAK STEEL BUILDINGS
PO BOX 1275
MADISON, GA 30650
PHONE:
(844) 333-PEAK
FAX:
(706) 343-1968

PROJECT NAME
JC POWDER COATING
220 PROGRESS DRIVE, FUQUAY-VARINA, NC 27526

CUSTOMER NAME
JC POWDER COATING
NEW HILL, NC 27562

JOB NUMBER
S20O8243A

SHEET TITLE

NORTH CAROLINA PROFESSIONAL SEAL 044221 ENGINEER JEFFREY D. BOX
07/01/2020

This seal pertains only to the materials designed and supplied by the Metal Building Manufacturer. The drawings and the metal buildings which they represent are the product of the Metal Building Manufacturer. The registered professional engineer whose seal appears on these drawings is employed by the Metal Building Manufacturer and does not serve as or represent the project engineer of record and shall not be construed as such.

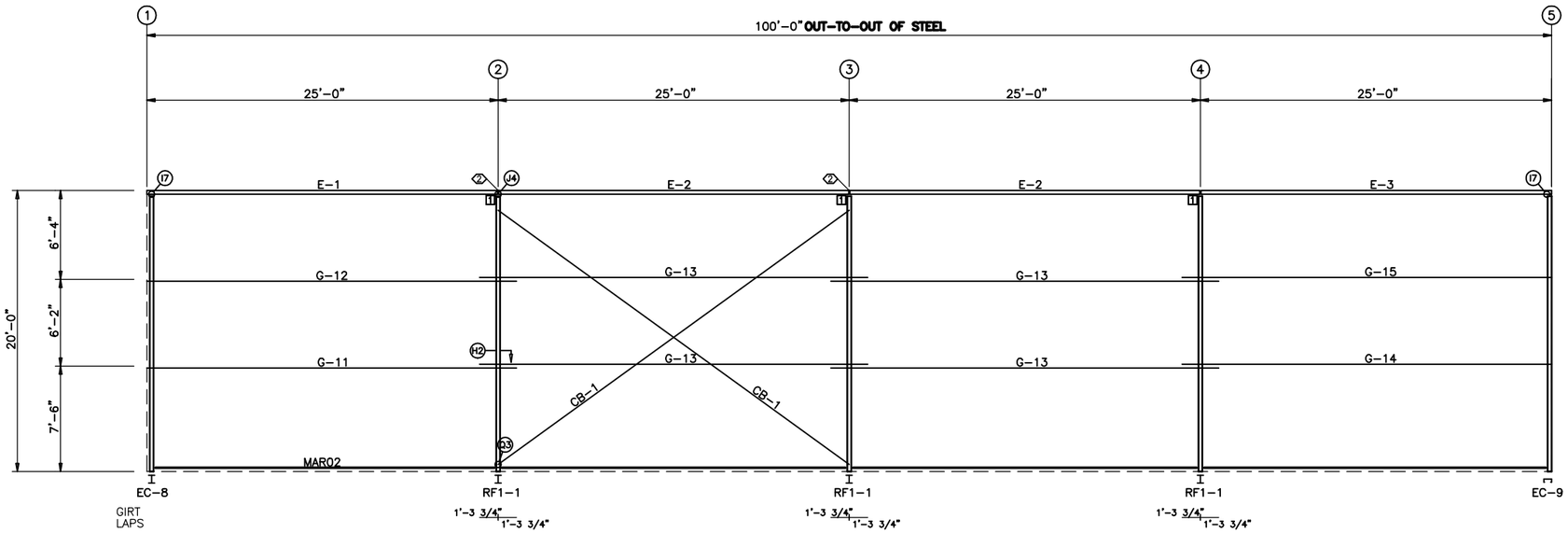

SIDEWALL FRAMING: FRAME LINE J

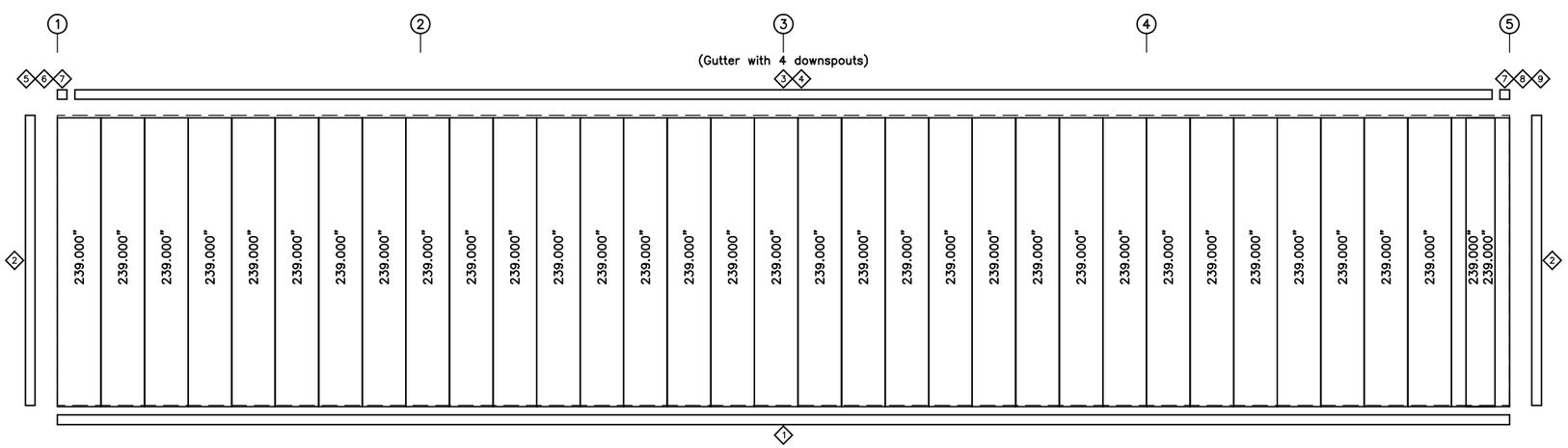

SIDEWALL SHEETING & TRIM: FRAME LINE J

PANELS: 26 Ga. CW – Desert Sand PVDF

TRIM TABLE FRAME LINE J			
◇ID	PART	LENGTH	DETAIL
1	BSD01	122.000	TRIM_200
2	OCA01	242.000	TRIM_79
3	GTA01	121.000	TRIM_951
4	GTA02	242.000	TRIM_951
5	H4000	5.000	TRIM_21
6	RCA01	9.250	
7	GRA01	8.000	
8	H4000	5.000	
9	RCA02	9.250	

SPECIAL BOLTS					
◇ ID	QUAN	TYPE	DIA	LENGTH	WASH
2	4	A325	1/2"	2"	1

MEMBER TABLE FRAME LINE J		
MARK	PART	LENGTH
E-1	10E060	299.625
E-2	10E060	299.750
E-3	10E060	299.625
G-11	08Z067	315.500
G-12	08Z060	315.500
G-13	08Z060	331.500
G-14	08Z067	315.500
G-15	08Z060	315.500
CB-1	RDB-	379.000

CONNECTION PLATES FRAME LINE J	
☐ID	MARK/PART
1	ESC02

SIDEWALL FRAMING PLAN

GENERAL NOTES

1. STD. ROD/CABLE SIZES PER PART PREFIX ARE:

ROD	CABLE
RDB- = 5/8" ROD	CAA- = 1/4" CABLE
RDC- = 3/4" ROD	CAB- = 3/8" CABLE
RDD- = 7/8" ROD	CAC- = 1/2" CABLE
RDE- = 1" ROD	
RDF- = 1 1/8" ROD	
RDG- = 1 1/4" ROD	

2. ROD/CABLE BRACING THAT OCCURS IN FLUSH OR INSET GIRT CONDITIONS WILL REQUIRE FIELD SLOTTING OF GIRT WEBS TO ALLOW FOR BRACING.
3. FRAMED OPENINGS WHICH ARE FIELD LOCATED WILL REQUIRE FIELD CUTTING OF GIRTS AND SHEETING.
4. THIS DRAWING IS NOT TO SCALE.

ISSUE	DWN	CHK	ENG	PE	DATE
PERMITS	MBS	DAW	KI	JDB	7/1/2020

PEAK STEEL BUILDINGS
PO BOX 1275
MADISON, GA 30650
PHONE: (844) 333-PEAK
FAX: (706) 343-1968

PROJECT NAME
JC POWDER COATING
220 PROGRESS DRIVE, FUQUAY-VARINA, NC 27526

CUSTOMER NAME
JC POWDER COATING
NEW HILL, NC 27562

JOB NUMBER
S20O8243A

SHEET TITLE

NORTH CAROLINA PROFESSIONAL SEAL 044221 ENGINEER JEFFREY D. BOX
07/01/2020

The seal pertains only to the materials designed and supplied by the Metal Building Manufacturer. The drawings and the metal buildings which they represent are the product of the Metal Building Manufacturer. The registered professional engineer whose seal appears on these drawings is employed by the Metal Building Manufacturer and does not serve as or represent the project engineer of record and shall not be construed as such.

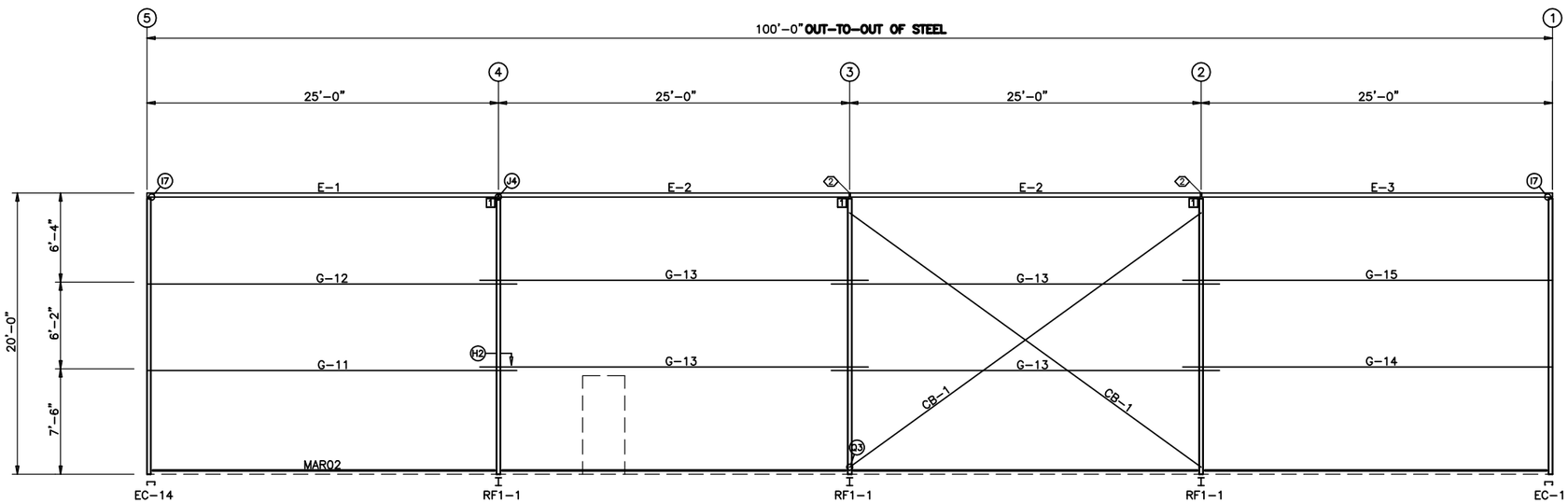

GIRT LAPS

1'-3 3/4" 1'-3 3/4"

1'-3 3/4" 1'-3 3/4"

1'-3 3/4" 1'-3 3/4"

SIDEWALL FRAMING: FRAME LINE A

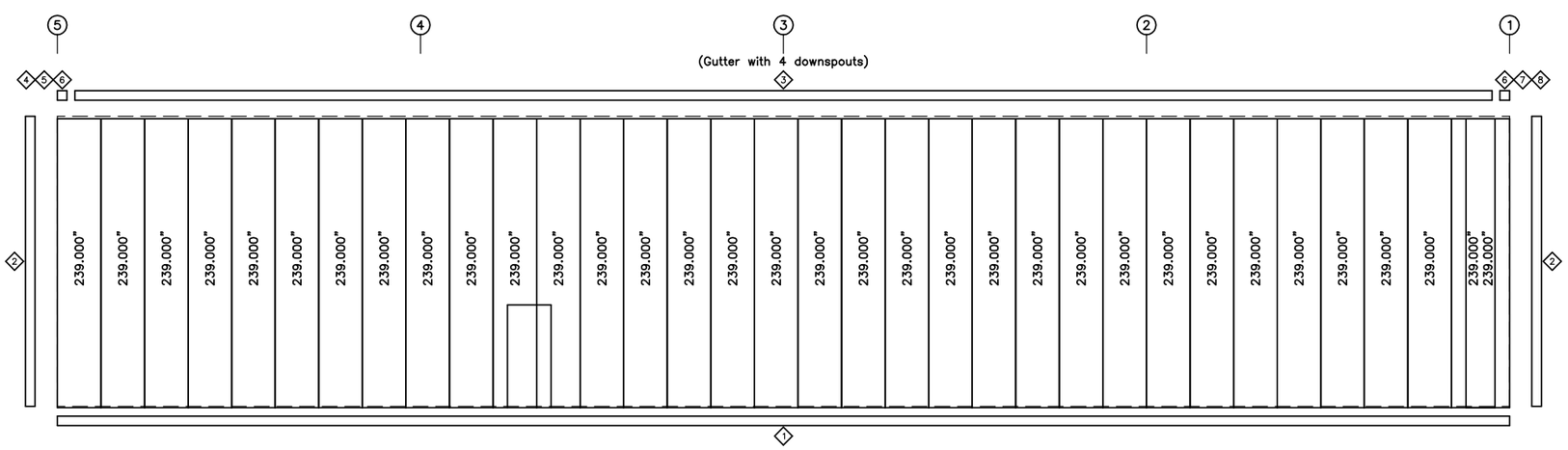

SIDEWALL SHEETING & TRIM: FRAME LINE A

PANELS: 26 Ga. CW – Desert Sand PVDF

TRIM TABLE
FRAME LINE A

◇ID	PART	LENGTH	DETAIL
1	BSD01	122.000	TRIM_200
2	OCA01	242.000	TRIM_79
3	GTA02	242.000	TRIM_951
4	H4000	5.000	TRIM_21
5	RCA01	9.250	
6	GRA01	8.000	
7	H4000	5.000	
8	RCA02	9.250	

SPECIAL BOLTS

◇ ID	QUAN	TYPE	DIA	LENGTH	WASH
2	4	A325	1/2"	2"	1

MEMBER TABLE
FRAME LINE A

MARK	PART	LENGTH
E-1	10E060	299.625
E-2	10E060	299.750
E-3	10E060	299.625
G-11	08Z067	315.500
G-12	08Z060	315.500
G-13	08Z060	331.500
G-14	08Z067	315.500
G-15	08Z060	315.500
CB-1	RDB-	379.000

CONNECTION PLATES
FRAME LINE A

☐ID	MARK/PART
1	ESC02

SIDEWALL FRAMING PLAN

GENERAL NOTES

1. STD. ROD/CABLE SIZES PER PART PREFIX ARE:

ROD	CABLE
RDB- = 5/8" ROD	CAA- = 1/4" CABLE
RDC- = 3/4" ROD	CAB- = 3/8" CABLE
RDD- = 7/8" ROD	CAC- = 1/2" CABLE
RDE- = 1" ROD	
RDF- = 1 1/8" ROD	
RDG- = 1 1/4" ROD	

2. ROD/CABLE BRACING THAT OCCURS IN FLUSH OR INSET GIRT CONDITIONS WILL REQUIRE FIELD SLOTTING OF GIRT WEBS TO ALLOW FOR BRACING.
3. FRAMED OPENINGS WHICH ARE FIELD LOCATED WILL REQUIRE FIELD CUTTING OF GIRTS AND SHEETING.
4. THIS DRAWING IS NOT TO SCALE.

ISSUE	DWN	CHK	ENG	PE	DATE
PERMITS	MBS	DAW	KI	JDB	7/1/2020

PEAK STEEL BUILDINGS
PO BOX 1275
MADISON, GA 30650
PHONE: (844) 333-PEAK
FAX: (706) 343-1968

PROJECT NAME
JC POWDER COATING
220 PROGRESS DRIVE, FUQUAY-VARINA, NC 27526

CUSTOMER NAME
JC POWDER COATING
NEW HILL, NC 27562

SHEET TITLE

JOB NUMBER
S20O8243A

NORTH CAROLINA PROFESSIONAL SEAL 044221 ENGINEER JEFFREY D. BOX
07/01/2020

This seal pertains only to the materials designed and supplied by the Metal Building Manufacturer. The drawings and the metal buildings which they represent are the product of the Metal Building Manufacturer. The registered professional engineer whose seal appears on these drawings is employed by the Metal Building Manufacturer and does not serve as or represent the project engineer of record and shall not be construed as such.

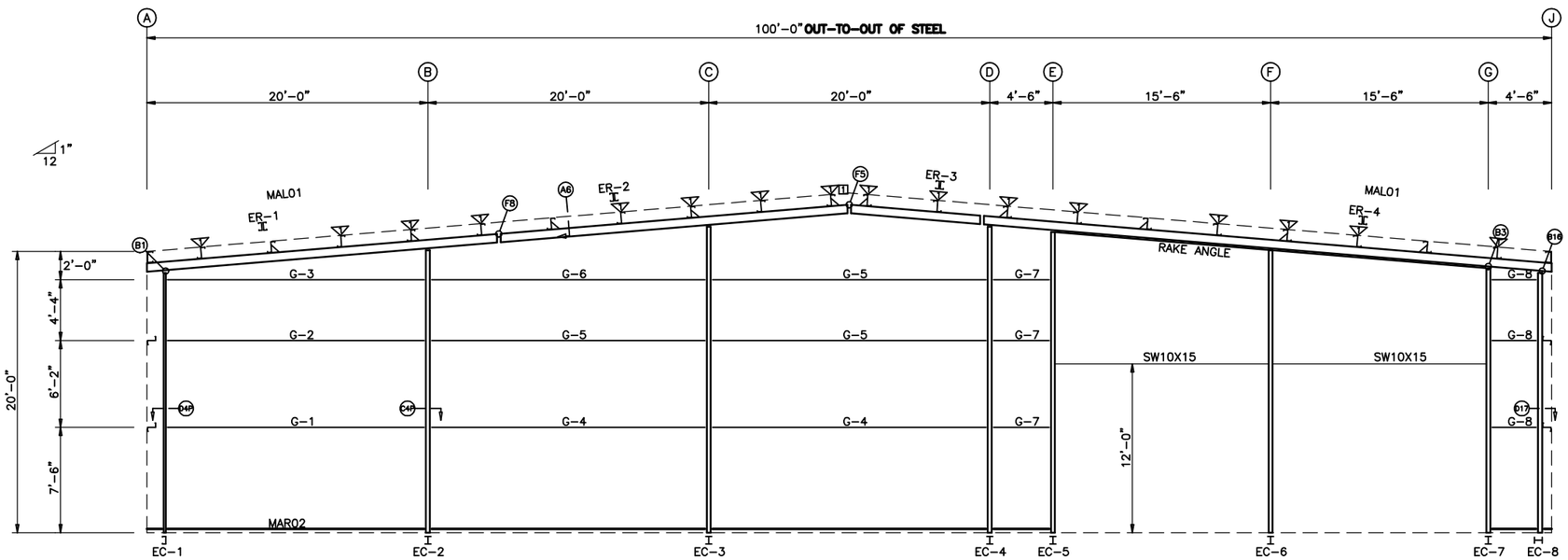

ENDWALL FRAMING: FRAME LINE 1

NOTE: THE FRAMING AS DEPICTED ABOVE IS NOT DESIGNED TO ACCOMMODATE ANY FUTURE EXPANSION.

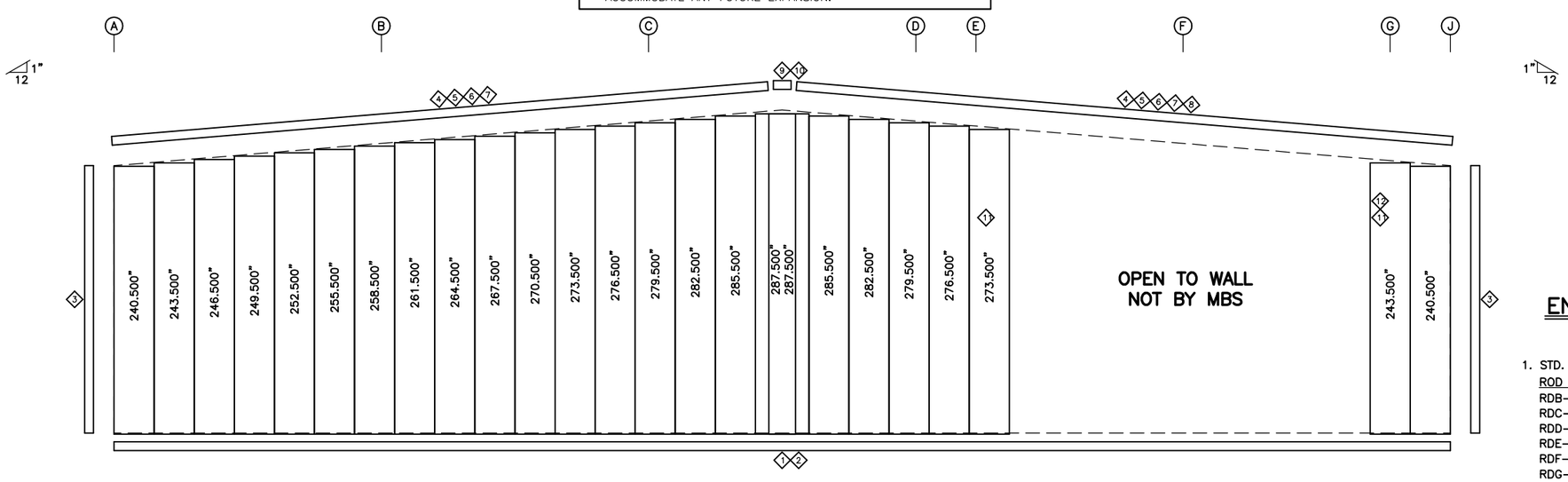

ENDWALL SHEETING & TRIM: FRAME LINE 1

PANELS: 26 Ga. CW – Desert Sand PVDF

BOLT TABLE FRAME LINE 1				
LOCATION	QUAN	TYPE	DIA	LENGTH
ER-1/ER-2	8	A325	5/8"	2 1/4"
ER-2/ER-3	4	A325	1/2"	2"
ER-3/ER-4	8	A325	5/8"	2 1/4"
EC-1/ER-1	6	A325	1/2"	2"
Int_Column/Raf	4	A325	1/2"	2"
EC-8/ER-4	4	A325	1/2"	2"

TRIM TABLE FRAME LINE 1			
◇ID	PART	LENGTH	DETAIL
1	BSD01	122.000	TRIM_200
2	BSD01	Use Drop	TRIM_200
3	OCA01	242.000	TRIM_79
4	RTA02	242.000	TRIM_952
5	RRA01	121.000	TRIM_952
6	LEE10	121.000	
7	RRA01	121.000	
8	RTA02	242.000	TRIM_902
9	MPB01	26.440	
10	MPP01	14.380	
11	JTA145	145.000	TRIM_98
12	JTA121	121.000	TRIM_98

MEMBER TABLE FRAME LINE 1		
MARK	PART	LENGTH
EC-1	W08S075	223.250
EC-2	W8x10	242.125
EC-3	W8x10	262.125
EC-4	W8x10	262.125
EC-5	W10x15	257.625
EC-6	W10x22	242.188
EC-7	W10x15	226.625
EC-8	W8x10	223.250
ER-1	W08SD099	301.438
ER-2	W08SD099	299.500
ER-3	W08SD099	103.500
ER-4	W08SD099	497.438
G-1	08Z075	215.500
G-2	08Z060	215.500
G-3	08Z054	215.500
G-4	08Z075	231.500
G-5	08Z060	231.500
G-6	08Z054	231.500
G-7	08Z054	45.500
G-8	08Z054	33.375

FLANGE BRACE TABLE FRAME LINE 1			
▽ ID	# SIDES	MARK	CLIP
1	1	FBE01	FBL&N01

CONNECTION PLATES FRAME LINE 1	
□ID	MARK/PART
1	NCR03

ENDWALL FRAMING PLAN

GENERAL NOTES

1. STD. ROD/CABLE SIZES PER PART PREFIX ARE:

ROD	CABLE
RDB– = 5/8" ROD	CAA– = 1/4" CABLE
RDC– = 3/4" ROD	CAB– = 3/8" CABLE
RDD– = 7/8" ROD	CAC– = 1/2" CABLE
RDE– = 1" ROD	
RDF– = 1 1/8" ROD	
RDG– = 1 1/4" ROD	

2. ROD/CABLE BRACING THAT OCCURS IN FLUSH OR INSET GIRT CONDITIONS WILL REQUIRE FIELD SLOTTING OF GIRT WEBS TO ALLOW FOR BRACING.
3. FRAMED OPENINGS WHICH ARE FIELD LOCATED WILL REQUIRE FIELD CUTTING OF GIRTS AND SHEETING.
4. THIS DRAWING IS NOT TO SCALE.

ISSUE	DWN	CHK	ENG	PE	DATE
PERMITS	MBS	DAW	KI	JDB	7/1/2020

PEAK STEEL BUILDINGS
PO BOX 1275
MADISON, GA 30650
PHONE:
(844) 333-PEAK
FAX:
(706) 343-1968

PROJECT NAME
JC POWDER COATING
220 PROGRESS DRIVE, FUQUAY-VARINA, NC 27526

CUSTOMER NAME
JC POWDER COATING
NEW HILL, NC 27562

JOB NUMBER
S20O8243A

SHEET TITLE

NORTH CAROLINA PROFESSIONAL SEAL 044221 ENGINEER JEFFREY D. BOX
07/01/2020

The seal pertains only to the materials designed and supplied by the Metal Building Manufacturer. The drawings and the metal buildings which they represent are the product of the Metal Building Manufacturer. The registered professional engineer whose seal appears on these drawings is employed by the Metal Building Manufacturer and does not serve as or represent the project engineer of record and shall not be construed as such.

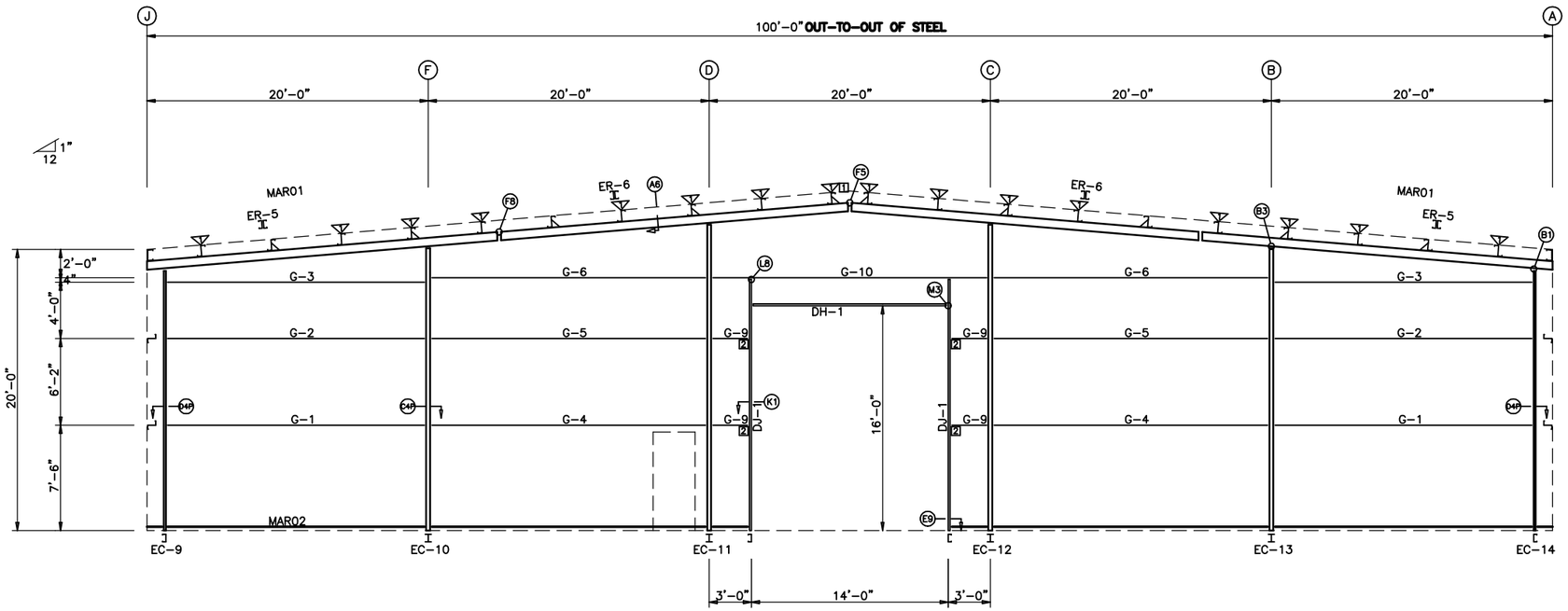

ENDWALL FRAMING: FRAME LINE 5

NOTE: THE FRAMING AS DEPICTED ABOVE IS NOT DESIGNED TO ACCOMMODATE ANY FUTURE EXPANSION.

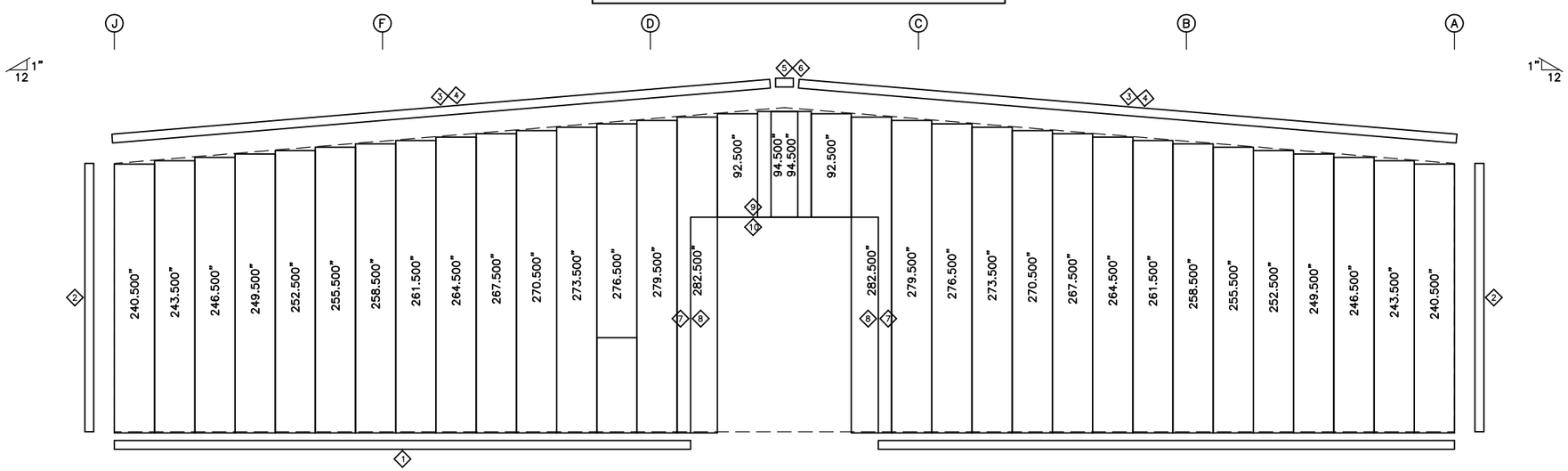

ENDWALL SHEETING & TRIM: FRAME LINE 5

PANELS: 26 Ga. CW – Desert Sand PVDF

BOLT TABLE
FRAME LINE 5

LOCATION	QUAN	TYPE	DIA	LENGTH
ER-5/ER-6	8	A325	5/8"	2 1/4"
ER-6/ER-6	4	A325	1/2"	2"
Cor_Column/Raf	6	A325	1/2"	2"
Int_Column/Raf	4	A325	1/2"	2"

TRIM TABLE
FRAME LINE 5

◇ID	PART	LENGTH	DETAIL
1	BSD01	122.000	TRIM_200
2	OCA01	242.000	TRIM_79
3	RTA02	242.000	TRIM_952
4	RRA01	121.000	TRIM_952
5	MPB01	26.440	
6	MPP01	14.380	
7	CCA193	193.000	TRIM_19
8	JTA193	193.000	TRIM_98
9	CCA169	169.000	TRIM_19
10	HTA172	172.000	TRIM_98

MEMBER TABLE
FRAME LINE 5

MARK	PART	LENGTH
EC-9	W08S075	219.250
EC-10	W8x10	238.063
EC-11	W8x10	258.063
EC-12	W8x10	258.063
EC-13	W8x10	238.063
EC-14	W08S075	219.250
ER-5	W12SD089	301.438
ER-6	W12SD089	299.188
DJ-1	J08C060	216.000
DH-1	J08C060	168.000
G-1	08Z075	215.500
G-2	08Z060	215.500
G-3	08Z054	215.500
G-4	08Z075	231.500
G-5	08Z060	231.500
G-6	08Z054	231.500
G-9	08Z054	28.500
G-10	08Z089	231.500

FLANGE BRACE TABLE
FRAME LINE 5

▽ ID	# SIDES	MARK	CLIP
1	1	FBE01	FBL&N01

CONNECTION PLATES
FRAME LINE 5

□ID	MARK/PART
1	NCR03
2	JCA&P02

ENDWALL FRAMING PLAN

GENERAL NOTES

1. STD. ROD/CABLE SIZES PER PART PREFIX ARE:

ROD		CABLE	
RDB-	= 5/8" ROD	CAA-	= 1/4" CABLE
RDC-	= 3/4" ROD	CAB-	= 3/8" CABLE
RDD-	= 7/8" ROD	CAC-	= 1/2" CABLE
RDE-	= 1" ROD		
RDF-	= 1 1/8" ROD		
RDG-	= 1 1/4" ROD		

2. ROD/CABLE BRACING THAT OCCURS IN FLUSH OR INSET GIRT CONDITIONS WILL REQUIRE FIELD SLOTTING OF GIRT WEBS TO ALLOW FOR BRACING.
3. FRAMED OPENINGS WHICH ARE FIELD LOCATED WILL REQUIRE FIELD CUTTING OF GIRTS AND SHEETING.
4. THIS DRAWING IS NOT TO SCALE.

ISSUE	DWN	CHK	ENG	PE	DATE
PERMITS	MBS	DAW	KI	JDB	7/1/2020

PEAK STEEL BUILDINGS
PO BOX 1275
MADISON, GA 30650
PHONE: (844) 333-PEAK
FAX: (706) 343-1968

PROJECT NAME
JC POWDER COATING
220 PROGRESS DRIVE, FUQUAY-VARINA, NC 27526

CUSTOMER NAME
JC POWDER COATING
NEW HILL, NC 27562

JOB NUMBER
S20O8243A

SHEET TITLE

NORTH CAROLINA PROFESSIONAL SEAL 044221 ENGINEER JEFFREY D. BOX
07/01/2020

This seal pertains only to the materials designed and supplied by the Metal Building Manufacturer. The drawings and the metal buildings which they represent are the product of the Metal Building Manufacturer. The registered professional engineer whose seal appears on these drawings is employed by the Metal Building Manufacturer and does not serve as or represent the project engineer of record and shall not be construed as such.

GENERAL PLUMBING NOTES:

ADMINISTRATIVE:

1. THE FOLLOWING ABBREVIATIONS SHALL APPLY TO NOTES AND PLANS: PC – PLUMBING CONTRACTOR, EC – ELECTRICAL CONTRACTOR, MC – MECHANICAL CONTRACTOR, GC – GENERAL CONTRACTOR, FASC – FIRE ALARM SYSTEM CONTRACTOR.
2. "PROVIDE" MEANS TO FURNISH AND INSTALL. THE PLUMBING CONTRACTOR SHALL ALSO INSTALL MATERIALS FURNISHED BY OTHERS AND THE GENERAL CONTRACTOR.
3. THE PC SHALL BE RESPONSIBLE FOR A COMPLETE AND OPERATIONAL SYSTEM AS DESCRIBED BY THESE PLANS AND SPECIFICATIONS.
4. ALL MATERIALS AND EQUIPMENT SHALL BE DELIVERED TO THE SITE AND UNLOADED AT AN APPROVED LOCATION. PC SHALL PROTECT ALL MATERIALS AND EQUIPMENT FROM BREAKAGE, THEFT, AND THE ELEMENTS. ALL MATERIALS AND EQUIPMENT SHALL REMAIN THE PROPERTY OF THE PC UNTIL THE PROJECT HAS BEEN COMPLETED AND TURNED OVER TO THE OWNER.
5. ALL MATERIALS USED SHALL BE NEW AND FREE OF DEFECTS. ANY MATERIALS FOUND TO BE DEFECTIVE SHALL BE REPLACED AT NO EXPENSE TO THE OWNER. ALL MATERIALS AND EQUIPMENT SHALL BEAR APPROVAL FROM UL OR AN APPROVED THIRD PARTY AGENCY. WHERE A MANUFACTURER AND MODEL NUMBER IS GIVEN, IT IS TO ESTABLISH A STANDARD OF QUALITY AND NOT TO LIMIT PRODUCTS TO A PARTICULAR MANUFACTURER. PRODUCTS DETERMINED TO BE EQUAL BY THE ENGINEER WILL BE ACCEPTED.
6. THE PLUMBING SYSTEM SHALL BE INSTALLED IN ACCORDANCE WITH THE 2018 NORTH CAROLINA PLUMBING CODE AND ANY APPLICABLE LOCAL CODES. WHERE A CONFLICT EXISTS BETWEEN THE ABOVE REQUIREMENTS, THE CONTRACTOR SHALL OBTAIN CLARIFICATION FROM THE ENGINEER OR IN THE EVENT ANY PART OF THESE PLANS CONFLICTS WITH THE ABOVE REQUIREMENTS.
7. THE PC SHALL OBTAIN AND PAY FOR ALL PERMITS, FEES, AND INSPECTIONS NECESSARY FOR THE COMPLETION OF THE WORK UNDER THIS CONTRACT.
8. DO NOT SCALE THESE DRAWINGS–REFER TO ARCHITECTURAL SHEETS FOR DIMENSIONS.
9. THESE PLANS ARE DIAGRAMMATIC. THE PC SHALL ADJUST THE LOCATIONS OF EQUIPMENT, FIXTURES, PIPING, ETC, TO ACCOMMODATE PLANNED AND ENCOUNTERED INTERFERENCES. THE DRAWINGS DO NOT SHOW ALL BENDS, OFFSETS, AND FITTINGS THAT MAY BE REQUIRED FOR A COMPLETE AND OPERATIONAL SYSTEM. THE PC SHALL MAKE ALLOWANCES FOR SUCH DEVIATIONS AND CONTINGENCIES IN BID TO IMPLEMENT THEM WITHOUT ADDITIONAL COST TO THE OWNER. THE PC SHALL VISIT THE SITE PRIOR TO BIDDING TO BECOME FAMILIAR WITH EXISTING CONDITIONS. CONTRACTOR SHALL CONTACT THE ENGINEER TO RESOLVE ANY DISCREPANCIES BETWEEN EXISTING CONDITIONS AND THESE PLANS. TO AVOID POTENTIAL CONFLICTS, COORDINATE WITH OTHER TRADES PRIOR TO THE START OF CONSTRUCTION. ALL UNDERGROUND UTILITIES SHALL BE LOCATED PRIOR TO ANY DIGGING.
10. TRENCHING, COMPACTION, AND BACKFILL SHALL BE BY PC AND SHALL BE IN ACCORDANCE WITH SECTION 306 OF THE NC PLUMBING CODE. UNDERGROUND LINES SHALL BE LOCATED SUCH THAT THEY DO NOT ENDANGER FOOTINGS OR FOUNDATION WALLS.
11. THE PC SHALL PROVIDE FIRESTOPPING AT ALL PENETRATIONS OF RATED FLOOR/CEILING ASSEMBLIES AND RATED WALL ASSEMBLIES TO PRESERVE OR RESTORE THE FIRE RESISTANCE RATING. SEAL ALL PENETRATIONS USING A UL LISTED SYSTEM FOUND IN THE UL DIRECTORY SPECIFIC TO THE UL LISTING OF THE ASSEMBLY BEING PENETRATED. SEE ARCHITECTURAL PLANS FOR UL RATED ASSEMBLIES SPECIFIC TO THE PROJECT.
12. SYSTEM TESTING SHALL BE PERFORMED BY PLUMBING CONTRACTOR IN ACCORDANCE WITH NORTH CAROLINA PLUMBING CODE, SECTIONS 312.2, 312.3, AND 312.5.
13. PC SHALL DISINFECT THE ENTIRE DOMESTIC WATER PIPING SYSTEM IN ACCORDANCE WITH THE AMERICAN WATER WORKS ASSOCIATION'S SPECIFICATIONS AND LOCAL HEALTH DEPARTMENT REGULATIONS.
14. AT THE COMPLETION OF WORK AND PRIOR TO ACCEPTANCE BY OWNER, THE PC SHALL CLEAN ALL EXPOSED FIXTURES, MATERIALS, AND EQUIPMENT UNDER THIS CONTRACT.
15. PC SHALL COORDINATE WITH THE GENERAL CONTRACTOR TO ENSURE ALL APPLICABLE CONSTRUCTION WASTE IS RECYCLED DURING THE CONSTRUCTION PHASE OF THE PROJECT.

MATERIALS:

1. ALL OVERHEAD DOMESTIC WATER PIPING SHALL BE TYPE L COPPER WITH 95/5 LEAD FREE SOLDER, AND ALL BELOW GRADE WATER PIPING SHALL BE TYPE K COPPER WITH NO JOINTS. ALL PIPING SHALL HAVE MANUFACTURER'S NAME AND THE APPLICABLE STANDARD TO WHICH IT WAS MANUFACTURED CLEARLY MARKED ON EACH LENGTH. PIPING SHALL COMPLY WITH ASTM B-88. USE BRAZED JOINTS ON ALL COPPER PIPING 1-1/2 INCH AND LARGER. *** PC MAY USE PEX (ASTM F 877) WITH APPROVED FITTINGS (ASTM F 1807) WITH OWNER'S APPROVAL. *** CPVC PIPING (ASTM D 2846 OR ASTM F 441) WITH APPROVED FITTINGS (ASTM D 2846, ASTM F 438, OR ASTM F 439) MAY ALSO BE USED WHERE NOT LOCATED IN PLENUMS. ALL PLASTIC PIPE, FITTINGS, AND COMPONENTS SHALL BE THIRD PARTY CERTIFIED AS CONFORMING TO NSF 14. ALL PIPE AND PIPE FITTINGS, INCLUDING VALVES AND FAUCETS, USED IN THE WATER DISTRIBUTION SYSTEM SHALL HAVE A MAXIMUM LEAD CONTENT OF .25-PERCENT AND SHALL CONFORM TO NSF 61. HOT WATER DISTRIBUTION PIPE AND TUBING SHALL HAVE A MINIMUM PRESSURE RATING OF 100 PSI AT 180°F. COLD WATER DISTRIBUTION PIPE AND TUBING SHALL HAVE A MINIMUM PRESSURE RATING OF 160 PSI AT 73.4°F. DO NOT INSTALL PEX OR CPVC PIPING IN RETURN AIR PLENUMS.
2. BALL VALVES SHALL HAVE BRASS BODY, FULL PORT, CHROME PLATED BALL, WITH TEFLON SEATS, 150 PSI WSP, AND COMPLY WITH MSS SP-110. GATE VALVES SHALL HAVE BRONZE BODY, CLASS 150, AND COMPLY WITH MSS SP-80, TYPE 2 STANDARD. VALVE BODY SHALL BE ASTM B 62, BRONZE WITH INTEGRAL SEAT AND UNION RING BONNET. ENDS SHALL BE THREADED OR SOLDER WITH COPPER-SILICON BRONZE STEM AND SOLID-WEDGE BRONZE DISC. INSTALL VALVES IN LOCATIONS THAT PERMIT EASY ACCESS WITHOUT DAMAGE TO BUILDING OR FINISHED MATERIALS; PROVIDE ACCESS DOORS IF REQUIRED. VALVES SHALL BE BY NIBCO, WATTS, OR STOCKHAM.
3. COLD WATER LINES SHALL BE INSULATED WITH 1/2 INCH THICK FIBROUS GLASS INSULATION WITH A FLAME DENSITY RATING LESS THAN 25 AND A SMOKE DENSITY RATING LESS THAN 50 WHEN TESTED IN ACCORDANCE WITH ASTM E 84. HOT WATER LINES UP TO 2 INCHES DIAMETER SHALL HAVE 1 INCH THICK INSULATION CONFORMING TO THE SAME STANDARD. PIPING LARGER THAN 2 INCHES SHALL RECEIVE 1-1/2 INCH THICK INSULATION. CLOSED CELL RUBBER INSULATION MEETING THE SMOKE AND FLAME RATINGS ABOVE MAY BE SUBSTITUTED FOR FIBROUS GLASS TYPE IF SO DESIRED. INSULATION INSTALLED ON PIPING OPERATING BELOW AMBIENT TEMPERATURES MUST HAVE A CONTINUOUS VAPOR RETARDER. ALL JOINTS, SEAMS AND FITTINGS MUST BE SEALED. ON SYSTEMS OPERATING ABOVE AMBIENT, THE BUTT JOINTS SHOULD NOT BE SEALED. ON COLD SURFACES WHERE A VAPOR SEAL MUST BE MAINTAINED, INSULATION SHALL BE APPLIED WITH A CONTINUOUS, UNBROKEN MOISTURE AND VAPOR RETARDER. ALL HANGERS, SUPPORTS, ANCHORS, OR OTHER PROJECTIONS SECURED TO COLD SURFACES SHALL BE INSULATED AND VAPOR SEALED TO PREVENT CONDENSATION. ALL PIPE INSULATION SHALL BE CONTINUOUS THROUGH WALLS, CEILING OR FLOOR OPENINGS, OR SLEEVES EXCEPT WHERE FIRESTOP OR FIRESAFING MATERIALS ARE REQUIRED. INSULATION SHALL HAVE A FACTORY APPLIED ALL-SERVICE JACKET WITH SELF-SEALING LAP. WHITE-KRAFT PAPER BONDED TO ALUMINUM FOIL AND REINFORCED WITH GLASS FIBERS; CONFORMING TO ASTM C 1136 TYPE 1; VAPOR RETARDER; WITH A SELF-SEALING ADHESIVE. VERIFY THAT PIPING HAS BEEN TESTED, SURFACES ARE CLEAN AND DRY, AND ALL FOREIGN MATERIALS ARE REMOVED BEFORE APPLYING INSULATION MATERIALS. INSULATION SHALL BE BY KNAUF, ARMACELL, JOHNS-MANVILLE, OR OWENS-CORNING.
4. ALL INSULATION CONTAINING FIBROUS MATERIALS EXPOSED TO AIRFLOW SHALL BE RATED FOR THAT EXPOSURE OR SHALL BE ENCAPSULATED. INSULATING PROPERTIES FOR ALL MATERIALS SHALL MEET OR EXCEED INDUSTRY STANDARDS. POLYSTYRENE PRODUCTS SHALL MEET ASTM C578 91. ALL INSULATION SHALL BE LOW-EMITTING WITH NOT GREATER THAN 0.05 PPM FORMALDEHYDE EMISSIONS. THE MAXIMUM FLAME SPREAD AND SMOKE DEVELOPED INDEX FOR INSULATION SHALL MEET THE REQUIREMENTS OF THE LOCAL CODES AND ORDINANCES ADOPTED BY THE JURISDICTION IN WHICH THE BUILDING IS LOCATED.
5. FAUCETS AND FIXTURE FITTINGS SHALL CONFORM TO ASME A112.18.1. FAUCETS AND FIXTURE FITTINGS THAT SUPPLY DRINKING WATER FOR HUMAN CONSUMPTION SHALL CONFORM TO THE REQUIREMENTS OF NSF 61, SECTION 9. FIXTURE FITTINGS, FAUCETS, AND DIVERTERS SHALL BE INSTALLED AND ADJUSTED SO THAT THE FLOW OF HOT WATER FROM THE FITTINGS CORRESPONDS TO THE LEFT HAND SIDE OF THE FIXTURE FITTING.
6. BACKFLOW PREVENTION SHALL BE IN ACCORDANCE WITH SECTION 608.13 OF THE NC PLUMBING CODE AND THE LOCAL AUTHORITY HAVING JURISDICTION. REDUCED PRESSURE PRINCIPLE BACKFLOW PREVENTERS SHALL CONFORM TO ASSE 1013 OR AWWA C511. THE RELIEF OPENING SHALL DISCHARGE BY AIR GAP. AIR GAPS SHALL COMPLY WITH ASME A112.1.1 AND AIR GAP FITTINGS WITH ASME A112.1.3. DOUBLE CHECK VALVE ASSEMBLIES SHALL CONFORM TO ASSE 1015 OR AWWA C510. ACCESS TO BACKFLOW PREVENTERS SHALL BE PROVIDED AS SPECIFIED BY THE INSTALLATION INSTRUCTIONS OF THE APPROVED MANUFACTURER.
7. FOR BELOW GRADE SANITARY WASTE PIPING, PC SHALL USE SERVICE WEIGHT CAST IRON PIPE WITH COMPRESSION JOINTS (ASTM A 74). USE MINIMUM 2 INCH SIZE UNDERGROUND. SOLID WALL SCHEDULE 40 PVC (ASTM D 2665) WITH SCHEDULE 40 SOCKET TYPE PIPE FITTINGS (ASTM D 3311) MAY ALSO BE USED. DO NOT USE PVC PIPE FOR APPLICATIONS WHERE THE WASTE WATER TEMPERATURE EQUALS OR EXCEEDS 140°F OR IF THE BUILDING HEIGHT EXCEEDS 75 FEET.
8. FOR ABOVE GRADE SANITARY WASTE AND VENT PIPING, USE SERVICE WEIGHT CAST IRON NO-HUB TYPE WITH COUPLINGS (CISPI 301). SOLID WALL SCHEDULE 40 PVC (ASTM D 2665) WITH SCHEDULE 40 SOCKET TYPE FITTINGS (ASTM D 3311) MAY BE USED IF PERMITTED BY LOCAL CODE, EXCEPT IN BUILDINGS EXCEEDING 75 FEET IN HEIGHT. DO NOT INSTALL PVC IN RETURN AIR PLENUMS. ALL VENT AND BRANCH VENT PIPES SHALL BE SO GRADED AND CONNECTED AS TO DRAIN BACK TO THE DRAINAGE PIPE BY GRAVITY. BRANCH VENTS EXCEEDING 40 FEET IN DEVELOPED LENGTH SHALL BE INCREASED BY ONE NOMINAL SIZE FOR THE ENTIRE DEVELOPED LENGTH OF THE PIPE.
9. PC SHALL PROVIDE ALL WATER HEATERS (WATTAGE/INPUT AND CAPACITY AS NOTED IN SCHEDULE). ALL WATER HEATERS SHALL BE THIRD PARTY CERTIFIED; PROVIDE PANS FOR WATER HEATERS IN ACCORDANCE WITH 504.7 OF THE NC PLUMBING CODE. ELECTRICAL CONNECTIONS SHALL BE BY ELECTRICAL CONTRACTOR, PC SHALL COORDINATE WITH EC ON ELECTRICAL CHARACTERISTICS OF THE EQUIPMENT PROVIDED.

METHODS:

1. EXTEND DOMESTIC WATER PIPE FROM FIVE (5) FEET OUTSIDE THE BUILDING INTO THE BUILDING AS INDICATED ON THE PLANS AND INSTALL DOMESTIC WATER DISTRIBUTION PIPING TO ALL FIXTURES AND EQUIPMENT REQUIRING THE SAME. WATER SERVICE PIPE AND THE BUILDING SEWER SHALL BE SEPARATED BY 5 FEET OF UNDISTURBED OR COMPACTED EARTH IN ACCORDANCE WITH 603.2. PROVIDE ALL FITTINGS, VALVES, AND OTHER ACCESSORIES AS NECESSARY FOR A COMPLETE INSTALLATION. ALL DOMESTIC WATER PIPING SHALL BE CONCEALED IN FINISHED AREAS. ANY OPEN ENDS SHALL BE PROTECTED UNTIL FINAL CONNECTIONS ARE MADE.
2. ABOVE GRADE DOMESTIC WATER PIPING SHALL BE SLOPED AT A MINIMUM OF 1/32 INCH PER FOOT AND ARRANGED TO DRAIN AT LOW POINTS. INSTALL PIPING TO ALLOW FOR EXPANSION AND CONTRACTION WITHOUT STRESSING PIPE, JOINTS, OR CONNECTED EQUIPMENT. ROUTE PIPING IN AN ORDERLY MANNER-PARALLEL OR PERPENDICULAR TO WALLS WHEN POSSIBLE-AND MAINTAIN GRADIENT. EACH SUPPLY BRANCH LINE SERVING MORE THAN ONE FIXTURE SHALL HAVE A SHUTOFF VALVE INSTALLED TO ISOLATE ALL FIXTURES AND PIECES OF EQUIPMENT SUPPLIED BY THE BRANCH LINE. THE SHUTOFF VALVE SHALL BE LABELED AND LOCATED AS CLOSE TO THE CONNECTION TO THE SUPPLY MAIN AND RISER AS POSSIBLE. PROVIDE A FULL-OPEN VALVE ON THE BASE OF EVERY WATER RISER PIPE AND ON THE TOP OF EVERY WATER DOWN-FEED PIPE. PROVIDE VALVE HANDLE EXTENSIONS AS NECESSARY FOR INSULATION.
3. IT SHALL BE THE RESPONSIBILITY OF THE PC TO SUSPEND AND SUPPORT ALL PIPING SYSTEMS FOLLOWING RECOGNIZED ENGINEERING PRACTICES AND USING STANDARD, COMMERCIALLY ACCEPTED PIPE HANGERS AND SUSPENSION EQUIPMENT. ALL FIXTURES, DEVICES, AND EQUIPMENT SHALL BE SECURELY MOUNTED TO THE BUILDING STRUCTURE AND SHALL NOT RELY ON CEILING OR WALL SURFACES FOR SUPPORT. THE SUPPORT ATTACHMENT SHALL SUPPORT THE WEIGHT OF THE FIXTURE OR EQUIPMENT PLUS THE WEIGHT OF THE SUPPORT ATTACHMENT ITSELF. SUPPORT FROM THE TOP CHORD OF THE ROOF JOISTS, GIRDERS, AND BEAMS. THE BOTTOM CHORD IS NOT TO BE USED FOR EQUIPMENT AND PIPING SUPPORT. HANGERS SHALL NOT BE ATTACHED TO CORRUGATED STEEL DECKING. USE STEEL HANGERS FOR STEEL AND PLASTIC PIPE AND COPPER OR COPPER-PLATED HANGERS FOR COPPER PIPE. PROVIDE PROTECTION FOR COPPER PIPING IN CONTACT WITH DISSIMILAR METALS. WHERE COPPER PIPING IS SUPPORTED ON HANGERS WITH OTHER PIPING, PROVIDE A PERMANENT ELECTROLYTIC ISOLATION MATERIAL TO PREVENT CONTACT WITH OTHER METALS. IN GENERAL, HANGERS SHALL BE CLEVIS TYPE, STANDARD WEIGHT. FOR PIPING, HANGER SPACING SHALL BE IN ACCORDANCE WITH TABLE 308.5 OF THE NC PLUMBING CODE. HANGERS AND ACCESSORIES SHALL BE GRINNEL, MASON, OR B-LINE.
4. SLEEVE ALL PIPES PASSING THROUGH PARTITIONS, WALLS, AND FLOORS. SLEEVES IN FLOORS AND INTERIOR WALLS OF POURED IN PLACE CONCRETE, BRICK, TILE, OR MASONRY SHALL BE SCHEDULE 40 STEEL PIPE, MACHINE CUT. SLEEVES IN GYPSUM BOARD WALLS SHALL BE 22 GAUGE, ROLLED GALVANIZED SHEET METAL. TACK WELD ON THE LONGITUDINAL SEAM. PROVIDE SLEEVES WHERE PIPES PASS THROUGH FLOORS AND WALLS ABOVE AND BELOW CEILINGS. PROVIDE SPLIT PIPE SLEEVES IN NEW WALLS BUILT UP AROUND EXISTING PIPES. TACK WELD SPLIT SLEEVES TOGETHER. SLEEVES IN WALLS SHALL BE INSTALLED FLUSH WITH THE WALL. SLEEVES IN FLOORS SHALL EXTEND 3/4 INCH ABOVE THE FLOOR-EXCEPT THEY SHALL BE FLUSH FOR 2 HOUR RATED FLOORS-AND SHALL BE FLUSH WITH THE STRUCTURE BELOW. EACH SLEEVE SHALL HAVE AN INSIDE DIAMETER 1 INCH LARGER THAN THE OUTSIDE DIAMETER OF THE COVERING OF EACH COVERED PIPE TO ALLOW CONTINUOUS INSULATION-BUT NOT LESS THAN TWO PIPE SIZES LARGER THAN EACH UNCOVERED. ANNULAR SPACES BETWEEN SLEEVES AND PIPES SHALL BE FILLED OR CAULKED IN AN APPROVED MANNER.
5. THE TOP OF WATER PIPES INSTALLED BELOW GRADE OUTSIDE THE BUILDING SHALL BE BELOW THE FROST LINE OR A MINIMUM OF 12 INCHES BELOW FINISHED GRADE WHICHEVER IS GREATER. WATER PIPING INSTALLED IN A WALL EXPOSED TO THE EXTERIOR SHALL BE LOCATED ON THE HEATED SIDE OF THE WALL INSULATION. WATER PIPING INSTALLED IN AN UNCONDITIONED UTILITY ROOM OR UNCONDITIONED ATTIC SHALL BE INSULATED TO A MINIMUM OF R6.5 DETERMINED IN ACCORDANCE WITH ASTM C 177.
6. HOT WATER PROVIDED TO PUBLIC HAND-WASHING FACILITIES/LAVATORIES SHALL BE TEMPERED WATER DELIVERED THROUGH AN APPROVED WATER-TEMPERATURE LIMITING DEVICE THAT CONFORMS TO ASSE 1070 OR CSA B125.3.
7. INSULATE ALL EXPOSED WASTE AND SUPPLY PIPING UNDER LAVATORIES, SINKS, AND ELECTRIC WATER COOLERS WITH THE HANDI-LAV GUARD INSULATION KIT BY TRUEBRO OR EQUAL.
8. POTABLE WATER OUTLETS SHALL BE PROTECTED FROM BACKFLOW IN ACCORDANCE WITH 608.15. PRESSURE TYPE VACUUM BREAKERS SHALL CONFORM TO ASSE 1020 AND SPILPROOF VACUUM BREAKERS SHALL COMPLY WITH ASSE 1056. HOSE-CONNECTION VACUUM BREAKERS SHALL CONFORM TO ASSE 1011, ASSE 1019, ASSE 1035, OR ASSE 1052. CONNECTIONS TO BEVERAGE DISPENSERS, COFFEE MACHINES, AND NON-CARBONATED BEVERAGE DISPENSERS SHALL BE PROTECTED BY A BACKFLOW PREVENTER IN ACCORDANCE WITH ASSE 1022.
9. THE PC SHALL INSTALL WATER HAMMER ARRESTORS ON BRANCH LINES WITH QUICK CLOSING VALVES PER MANUFACTURER'S INSTALLATION INSTRUCTIONS. WATER HAMMER ARRESTORS SHALL CONFORM TO ASSE 1010.
10. THE PC SHALL PROVIDE CHECK VALVES AT ALL FIXTURES WITH THREADED OUTLETS AS REQUIRED BY CODE. TRAP PRIMERS SHALL BE PROVIDED AS SHOWN ON THE PLANS OR AS REQUIRED.
11. ADJUST STOPS AND VALVES FOR INTENDED FLOW RATE TO FIXTURES WITHOUT SPLASHING, NOISE, OR OVERFLOW.
12. BEFORE COMMENCING WORK, CHECK INVERT ELEVATIONS REQUIRED FOR SEWER CONNECTIONS, CONFIRM INVERTS, AND VERIFY THESE CAN BE PROPERLY CONNECTED TO WITH SLOPE FOR DRAINAGE AND COVER TO AVOID FREEZING. ONCE INVERTS AND FALL HAVE BEEN ESTABLISHED, EXTEND SANITARY SEWER PIPING TO 5 FEET OUTSIDE THE BUILDING AND INSTALL ALL DRAINS, STACKS, VENTS, FLOOR DRAINS, AND CLEANOUTS NECESSARY FOR A COMPLETE INSTALLATION.
13. ALL SANITARY SEWER PIPING IS BELOW GRADE OR WITHIN WALLS UNLESS OTHERWISE NOTED. ALL SANITARY VENT PIPING IS ABOVE THE CEILING OR WITHIN WALLS UNLESS OTHERWISE NOTED. SOIL AND WASTE PIPING SHALL BE INSTALLED TO PROVIDE PROTECTION AGAINST FREEZING PER 305.6.1. WASTE AND SOIL LINES LEAVING THE BUILDING MUST HAVE A MINIMUM COVER OF 3 INCHES.
14. SOIL AND WASTE LINES 2-1/2 INCHES AND SMALLER SHALL BE SLOPED AT 1/4 INCH PER FOOT MINIMUM. SOIL AND WASTE LINES 3 INCHES TO 6 INCHES IN DIAMETER SHALL BE SLOPED AT 1/8 INCH PER FOOT MINIMUM.
15. FOR WATER CLOSET WASTE CONNECTIONS, A 4 INCH BY 3 INCH CLOSET BEND SHALL BE ACCEPTABLE. WHERE A 3 INCH BEND IS UTILIZED ON WATER CLOSETS, A 4 INCH BY 3 INCH FLANGE SHALL BE INSTALLED TO RECEIVE THE FIXTURE HORN.
16. FOR PLASTIC PIPE SIZES GREATER THAN 6 INCHES, AND OTHER PIPE SIZES GREATER THAN 4 INCHES, RESTRAINTS SHALL BE PROVIDED FOR DRAIN PIPES AT ALL CHANGES IN DIRECTION AND AT ALL CHANGES IN DIAMETER GREATER THAN TWO PIPE SIZES. BRACES, BLOCKS, RODDING, BACKFILL AND OTHER SUITABLE METHODS AS SPECIFIED BY THE COUPLING MANUFACTURER SHALL BE UTILIZED.
17. BASES OF STACKS SHALL BE SUPPORTED BY THE BUILDING STRUCTURE, VIRGIN OR COMPACTED EARTH, OR OTHER SUITABLE MATERIAL TO SUPPORT THE WEIGHT OF THE PIPING.
18. HORIZONTAL DRAIN PIPES SHALL HAVE CLEANOUTS IN ACCORDANCE WITH 708.10. EXTEND CLEANOUTS TO FINISHED FLOOR OR WALL SURFACE. LUBRICATE THREADED CLEANOUT PLUGS WITH A MIXTURE OF GRAPHITE AND LINSEED OIL. ENSURE CLEARANCE AT ALL CLEANOUTS FOR RODDING OF DRAINAGE SYSTEM. INSTALL FLOOR CLEANOUTS AT AN ELEVATION TO ACCOMMODATE FINISHED FLOOR. EVERY CLEANOUT SHALL BE INSTALLED TO ALLOW CLEANING IN THE DIRECTION OF FLOW OF THE DRAINAGE PIPE OR AT RIGHT ANGLES THERETO. CLEANOUTS ON 6 INCH AND SMALLER PIPES SHALL BE PROVIDED WITH A CLEARANCE OF NOT LESS THAN 18 INCHES FOR RODDING.
19. DRAINAGE PIPING FOR FUTURE FIXTURES SHALL TERMINATE WITH AN APPROVED CAP OR PLUG.
20. AIR ADMITTANCE VALVES SHALL BE INSTALLED AFTER THE DWV TESTING REQUIRED BY SECTIONS 312.2 AND 312.3. PROVIDE ACCESS TO ALL AIR ADMITTANCE VALVES PER CODE. INSTALLATION OF ALL AIR ADMITTANCE VALVES SHALL CONFORM TO SECTION 917 OF THE NC PLUMBING CODE. AIR ADMITTANCE VALVES SHALL CONFORM TO ASSE 1050 OR 1051.
21. INDIRECT WASTE PIPING THAT EXCEEDS 2 FEET IN DEVELOPED LENGTH MEASURED HORIZONTALLY, OR 4 FEET IN TOTAL DEVELOPED LENGTH, SHALL BE TRAPPED. THE AIR GAP BETWEEN THE INDIRECT WASTE PIPE AND THE FLOOD LEVEL RIM OF THE WASTE RECEPTOR SHALL BE A MINIMUM OF TWICE THE EFFECTIVE OPENING OF THE INDIRECT WASTE PIPE.
22. THE PC SHALL PROVIDE UNIONS FOR DISASSEMBLY AND SERVICE OF ALL FIXTURES AND OTHER RELEVANT PLUMBING EQUIPMENT. UNIONS SHALL BE GROUND-JOINT WITH BRASS SEAT. PROVIDE INSULATING UNIONS AT EACH JUNCTION OF DISSIMILAR MATERIALS.
23. THE PC SHALL ACCURATELY ROUGH-IN ALL FIXTURES ACCORDING TO MANUFACTURER'S INSTALLATION DIMENSIONS AND INSTRUCTIONS. OFFSET ADAPTERS AND FLEXIBLE CONNECTORS ARE NOT ACCEPTABLE. FLUSH HANDLES SHALL BE MOUNTED ON THE WIDE SIDE OF TOILET AREAS FOR ADA COMPLIANCE. INSTALL EACH FIXTURE WITH TRAP EASILY REMOVABLE FOR SERVICING AND CLEANING. SEAL FIXTURES TO WALL AND FLOOR SURFACES WITH SEALANT. SOLIDLY ATTACH WATER CLOSETS TO FLOOR WITH LAG SCREWS. SEAL ALL SELF-RIMMING LAVATORIES AND SINKS (VITREOUS CHINA AND STAINLESS STEEL) WITH A COMMERCIAL GRADE PLUMBER'S PUTTY OR ACRYLIC LATEX CAULK APPLIED TO THE UNDERSIDE OF THE FIXTURE RIM IN A GENEROUS AMOUNT SO THAT WHEN FIXTURE IS SET, SEALANT SHALL OOZE OUT.
24. ALL VENT THRU THE ROOF (VTR) PENETRATIONS SHALL BE COORDINATED WITH THE GENERAL CONTRACTOR. PC SHALL PROVIDE FLASHING MATERIAL REQUIRED FOR VTRS. JOINTS AT THE ROOF AND AROUND VENT PIPES, SHALL BE MADE WATER TIGHT BY THE USE OF LEAD, COPPER, GALVANIZED STEEL, ALUMINUM, OR OTHER APPROVED FLASHINGS OR FLASHING MATERIAL. MAINTAIN MINIMUM 10 FEET FROM ALL OUTSIDE AIR INTAKES.

PLUMBING FIXTURE SCHEDULE

SYMBOL	FIXTURE	MANUFACTURER	FITTING	HW	CW	WASTE
P1H	TWO PIECE TANK TYPE ADA WATER CLOSET	TOTO CST744EL OR EQUAL BY AMERICAN STANDARD OR KOHLER	TWO-PIECE VITREOUS CHINA TOILET WITH HIGH-PROFILE TANK, ELONGATED FRONT BOWL AND CHROME TRIP LEVER. 1.28 GPF. PROVIDE SC534 OPEN FRONT SEAT LESS COVER. ASME 112.19.2 COMPLIANCE. TOP OF SEAT SHALL BE 17-19 INCHES AFF FOR ADA. LEVER MOUNTED ON WIDE SIDE FOR ADA	-	1/2"	3"
P2	WALL MOUNT LAVATORY	TOTO LT307.4 OR EQUAL BY AMERICAN STANDARD OR KOHLER	VITREOUS CHINA LAVATORY WITH BACKSPLASH COMPLYING WITH ASME 112.19.2. TOP OF RIM SHALL BE 34 INCHES AFF FOR ADA. PROVIDE WITH LAV-GUARD PROTECTORS FOR SUPPLY AND DRAIN LINES. PROVIDE JR SMITH 0700 (CONCEALED ARMS) WITH 19" ARMS 0800 (WALL SUPPORT PLATE). USE A METERING TYPE FAUCET SIMILAR TO CHICAGO 3300-E280SAB.	1/2"	1/2"	2"
P3	DRINKING FOUNTAIN	OASIS PG8ACSL OR EQUAL BY ELKAY OR STERN WILLIAMS	ADA COMPLIANT FOR ADULT AND CHILD. 8.0 GPH OF 50°F WATER AT 90°F AMBIENT. PROVIDE ACCESSORY APRON FOR ADA COMPLIANCE AS NECESSARY. HIGH/LOW UNIT	-	3/8"	2"
P4	EXPANSION TANK	AMTROL ST-5 OR EQUAL BY WATTS OR BELL & GOSSETT	INSTALL ON COLD WATER LINE BETWEEN WATER HEATER AND RPZ	-	3/4"	-
P5	SINK DOUBLE BOWL	ELKAY LRADQ3319 OR EQUAL BY FRANKE OR MOEN	TOP MOUNTED 18 GA STAINLESS STEEL. MAX BOWL DEPTH 6 INCHES FOR WHEEL CHAIR ACCESSIBLITY-USE DELTA FAUCET SET 340-WF OR EQUAL BY MOEN OR KOHLER.	1/2"	1/2"	2"
P6	REFRIGERATOR VALVE BOX	OATEY OR APPROVED EQUAL	HIGH IMPACT POLYSTYRENE BOX WITH 1/4 TURN BRASS BALL VALVE. COMPLIANT WITH NSF 61, SECTION 9.	-	1/2"	-
P7	THERMOSTATIC MIXING VALVE	WATTS LFMMV OR EQUAL BY LAWLER OR LEONARD VALVE	ASSE STANDARD 1069 OR 1070 APPROVED WITH 1/2 INCH FEMALE NPT INLET AND OUTLET CONNECTIONS, BRASS BODY, AND INTEGRAL MOUNTING HOLES. TAMPER RESISTANT THERMOPLASTIC ENCLOSURE. SINGLE REPLACEABLE CARTRIDGE DESIGN.	1/2"	1/2"	-
P8	FREEZEPROOF HOSE BIBB	WOODFORD MODEL 68 OR EQUAL BY ZURN OR MIFAB	THE MODEL 68 IS A ASSE 1053 LISTED HYDRANT, WITH A ASSE 1052 DOUBLE CHECK BACKFLOW PREVENTER, COMES WITH A CHROME PLATED BRASS HEAD WITH STAINLESS STEEL COVER, IT DRAINS AUTOMATICALLY EVEN WITH A ATTACHED HOSE, HAS A ONE PIECE PLUNGER WHICH CONTROLS DRAIN AND FLOW FUNCTION, WORKS WITH PRESSURES UP TO 125 PSI, AND A MAX TEMPERATURE OF 120 DEGREES, TEE KEY FOR HYDRANT DOOR AND LOCK, EASIER TO INSTALL THAN STANDARD RECESSED BOX HYDRANT, WALL CLAMP IS INCLUDED, HEAD COVER FLIPS DOWN AND OUT OF THE WAY FOR UNOBSTRUCTED HYDRANT USE	-	3/4"	-
P9	INTERIOR HOSE BIBB	WOODFORD MODEL 26 OR EQUAL BY ZURN OR MIFAB	PROVIDE CHECK VALVE AND ANTI-SIPHON PROTECTION IF NOT INTEGRAL TO UNIT	-	1/2"	-
P10	FLOOR DRAIN	WATTS FD-200-A OR EQUAL BY ZURN OR JR SMITH	ON GRADE EPOXY COATED CAST IRON FLOOR DRAIN WITH ANCHOR FLANGE, WEEP HOLES, ADJUSTABLE ROUND NICKEL BRONZE STRAINER, AND NO HUB OUTLET. PROVIDE TRAP PRIMER CONNECTION OPTION IF NOTED.	-	-	3"
P11	1" RPZ BACKFLOW PREVENTER	WATTS LF909 QT OR EQUAL BY CONBRACO OR WILKINS	RPZ ASSEMBLY CONSISTING OF A PRESSURE DIFFERENTIAL RELIEF VALVE LOCATED IN A ZONE BETWEEN TWO POSITIVE SEATING CHECK VALVES. THE ASSEMBLY SHALL INCLUDE TWO TIGHTLY CLOSING SHUTOFF VALVES BEFORE AND AFTER THE ASSEMBLY, TEST COCKS AND A PROTECTIVE STRAINER UPSTREAM OF THE FIRST SHUTOFF VALVE. THE ASSEMBLY SHALL MEET THE REQUIREMENTS OF ASSE 1013 AND AWWA C511	-	1"	-
FCO	FLOOR CLEANOUT	ZURN, WATTS, JR SMITH	EPOXY COATED CAST IRON FLOOR CLEANOUT WITH ROUND ADJUSTABLE GASKETED NICKEL BRONZE TOP, REMOVABLE GAS TIGHT GASKETED BRASS CLEANOUT PLUG, AND NO HUB INLET.	-	-	4"
WCO	WALL CLEANOUT	ZURN, WATTS, OR JR SMITH	CAST IRON CLEANOUT FERRULE WITH THREADED BRASS COUNTERSUNK CLEANOUT PLUG, STAINLESS STEEL ACCESS COVER, AND VANDAL PROOF STAINLESS STEEL SCREW	-	-	4"
AAV	AIR ADMITTANCE VALVE	STUDOR REDIVENT OR APPROVED EQUAL	ANSI/ASSE 1051 LISTED. NSF STANDARD 14. PROVIDE PVC OR ABS CONNECTOR AS NECESSARY. CONNECT VALVE TO PIPING PER MANUFACTURER. INSTALL IN THE VERTICAL, UPRIGHT POSITION AFTER ROUGH-IN AND PRESSURE TESTING OF THE SYSTEM. PROVIDE WALL BOX IF NOT ABOVE CEILING OR OTHERWISE CONCEALED.	-	-	2"

LINETYPE LEGEND

COLD WATER SUPPLY
HOT WATER SUPPLY
SANITARY SEWER LINE
VENT LINE

PLUMBING LINES SIZING TABLE

FIXTURE TYPE	OCCUPANCY	QTY	DRAINAGE FIXTURE UNITS		WATER SUPPLY FIXTURE UNITS				
			EACH	TOTAL	CW	HW	CW & HW	HW TOTAL	TOTAL
WATER CLOSET (FLUSH TANK)	PUBLIC	3	4.00	12.00	5.00	0.00	5.00	0.00	15.00
SHOWER	PUBLIC	1	2.00	2.00	3.00	3.00	4.00	3.00	4.00
LAVATORY	PUBLIC	4	1.00	4.00	1.50	1.50	2.00	6.00	8.00

DEMAND FIXTURE	GPM	QTY	TOTAL GPM			
HOSE BIBBS	5	2	10.00	TOTAL DFU	18.0	
				TOTAL WFSUs	9.0	27.0
				GPM	13.70	23.00
				OTHER FIXTURES' GPM	0.00	10.00
				TOTAL GPM	13.70	33.00

MINIMUM BUILDING DRAIN SIZE	4"
MINIMUM WATER LINE SIZE	1"

ELECTRIC WATER HEATER SCHEDULE

MARK	MFG	MODEL	TANK VOL	INPUT	RECOVERY	SET POINT	POWER		CONNECTIONS		OPTIONS
			GALS	kW	GPH @ 60° ΔT	°F	VOLTAGE	PHASE	HOT	COLD	
EWH-1	RHEEM	ELDS40	38	4.5	30	110	208	1	3/4	3/4	1-5

1. PROVIDE GALVANIZED STEEL SAFETY PAN
2. UL 174 LISTED
3. PROVIDE ASME LISTED TEMPERATURE AND PRESSURE RELIEF VALVE
4. MEET OR EXCEED ENERGY FACTOR REQUIREMENTS OF ASHRAE 90.1-2007
5. OR EQUAL BY A.O. SMITH, BRADFORD WHITE, OR STATE

PLUMBING NOTES AND SCHEDULES 1

Kilian Engineering Inc.
PO Box 3301, Henderson, NC 27536 | www.kilianengineering.com
(P) 252.438.8778 | CORPORATE LICENSE C-2277

NORTH CAROLINA PROFESSIONAL ENGINEER SEAL 048012 JACOB L HAMILTON 5-27-20
SEAL

KILIAN ENGINEERING, INC. CORPORATE SEAL NORTH CAROLINA
SEAL

NEW BUILDING FOR:
JC POWDERCOATING
FUQUAY-VARINA, NORTH CAROLINA

REVISION:

NO.	DATE	DESCRIPTION

ISSUED:

NO.	DATE	DESCRIPTION
0	5/27/20	FOR PERMIT

DRAWN BY: JLH
CHECKED BY: MWK/CML

PLUMBING NOTES AND SCHEDULES

SHEET NO.
P-1

PROJECT NO: 20139

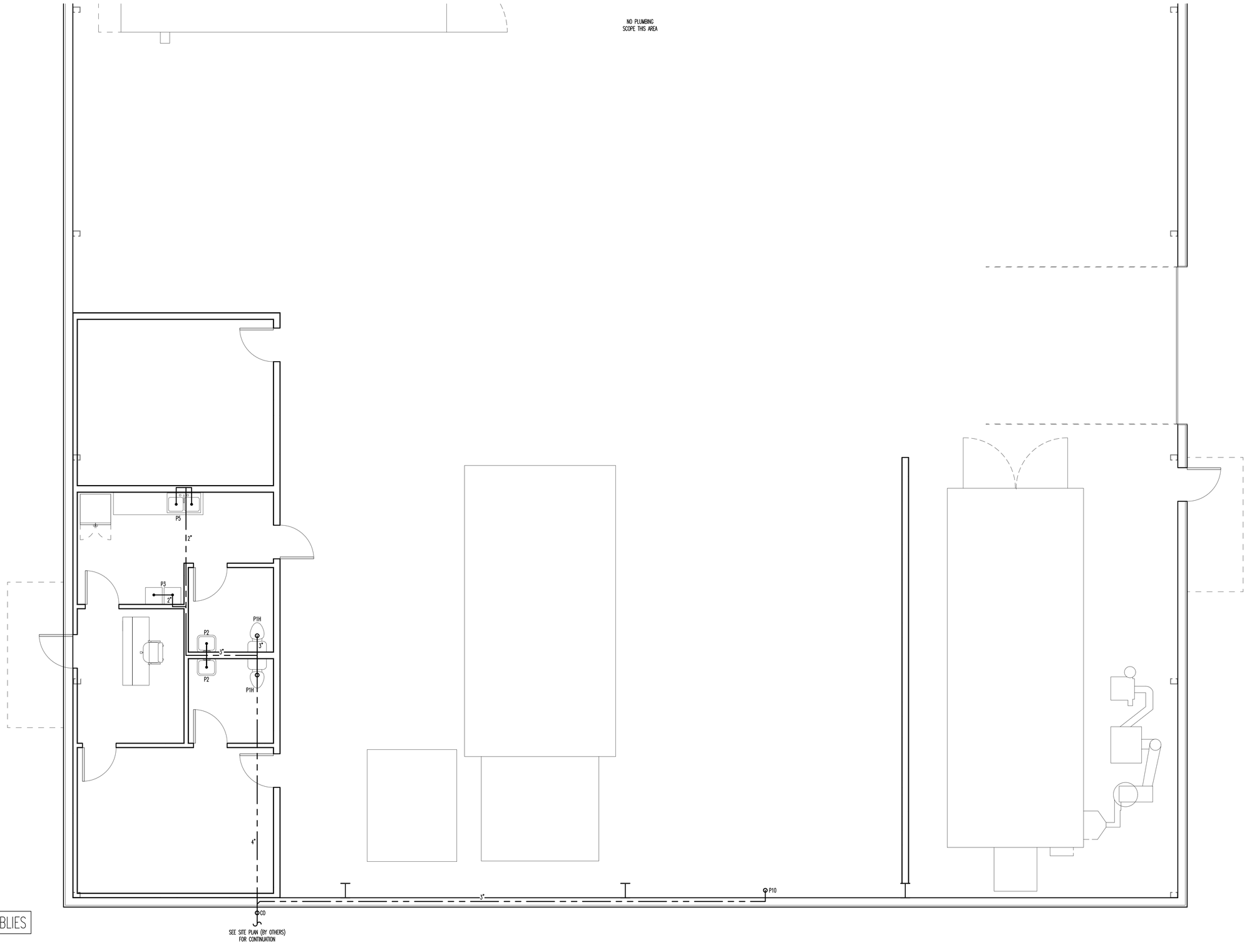

NO FIRE RATED ASSEMBLIES

SANITARY SEWER PLAN - SCALE: 1/4" = 1'

Kilian Engineering Inc.
PO Box 3301, Henderson, NC 27536 | www.kilianengineering.com
(P) 252-438-8778 | CORPORATE LICENSE C-2277

NORTH CAROLINA PROFESSIONAL SEAL ENGINEER JACOB L HAMILTON 5-27-20

SEAL

KILIAN ENGINEERING CORPORATE SEAL NORTH CAROLINA INC.

SEAL

NEW BUILDING FOR:

JC POWDERCOATING

FUQUAY-VARINA, NORTH CAROLINA

REVISION:

ISSUED:

0	FOR PERMIT	5/27/20

DRAWN BY: JLH
CHECKED BY: MWK /CML

SANITARY SEWER PLAN

SHEET NO.

P-2

PROJECT NO: 20139

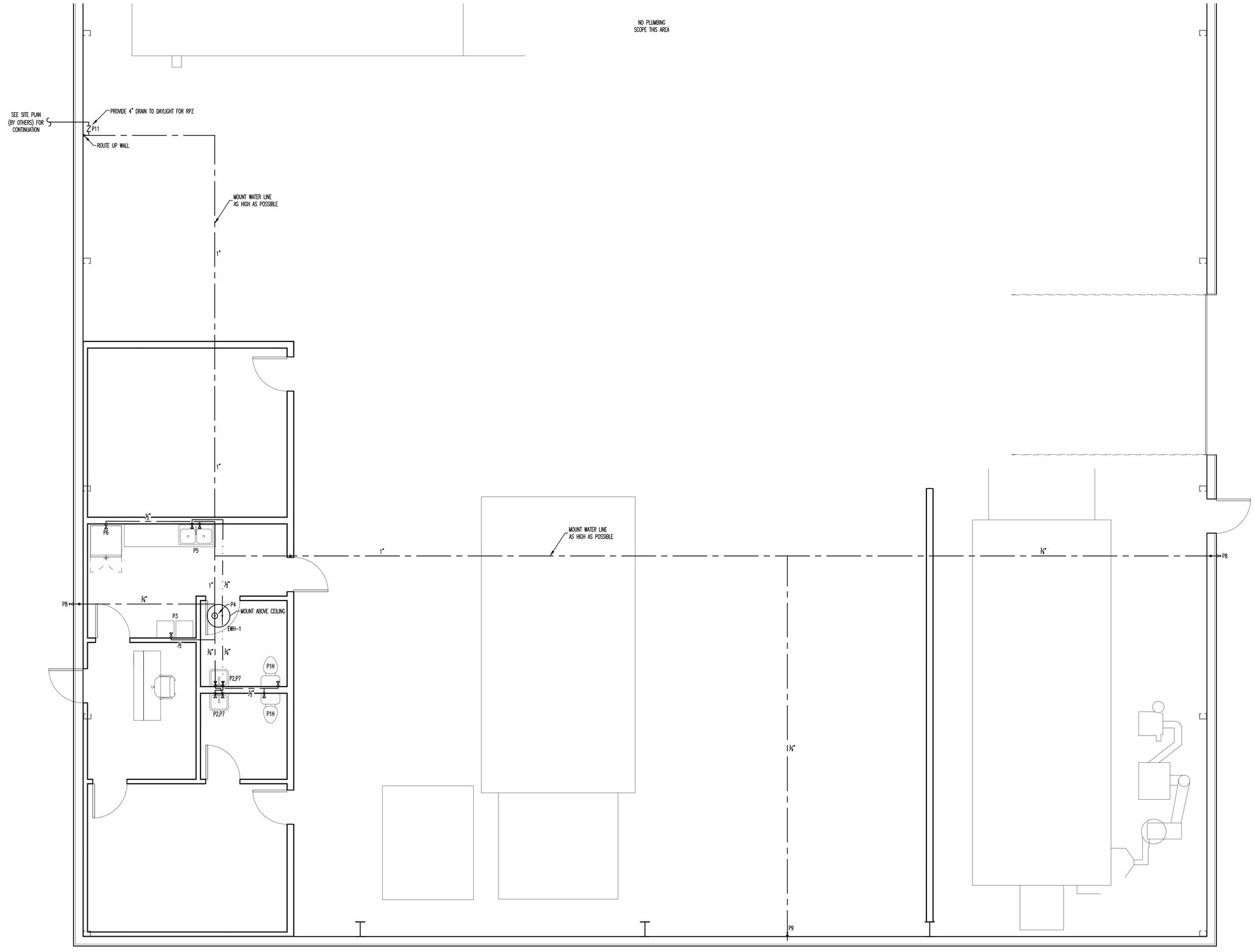

DOMESTIC SUPPLY PLAN - SCALE: 1/4" = 1' | 1

Kilian Engineering Inc.
PO Box 3301, Henderson, NC 27536 | www.kilianengineering.com
(P) 252.438.8778 | CORPORATE LICENSE C-2277

NORTH CAROLINA PROFESSIONAL ENGINEER SEAL JACOB L HAMILTON 5-27-20
SEAL

KILIAN ENGINEERING CORPORATE SEAL NORTH CAROLINA INC.
SEAL

NEW BUILDING FOR:

JC POWDERCOATING

FUQUAY-VARINA, NORTH CAROLINA

REVISION:

NO	DATE	DESCRIPTION

ISSUED:

NO	DATE	DESCRIPTION
0	5/27/20	FOR PERMIT

DRAWN BY: JLH
CHECKED BY: MWK /CML

DOMESTIC SUPPLY PLAN

SHEET NO.

P-3

PROJECT NO: 20139

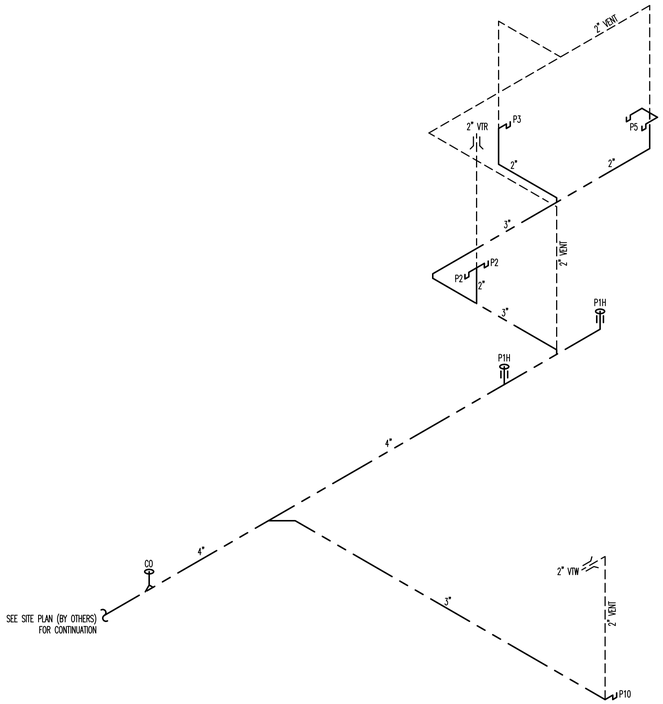

SANITARY SEWER RISER - NO SCALE | 1

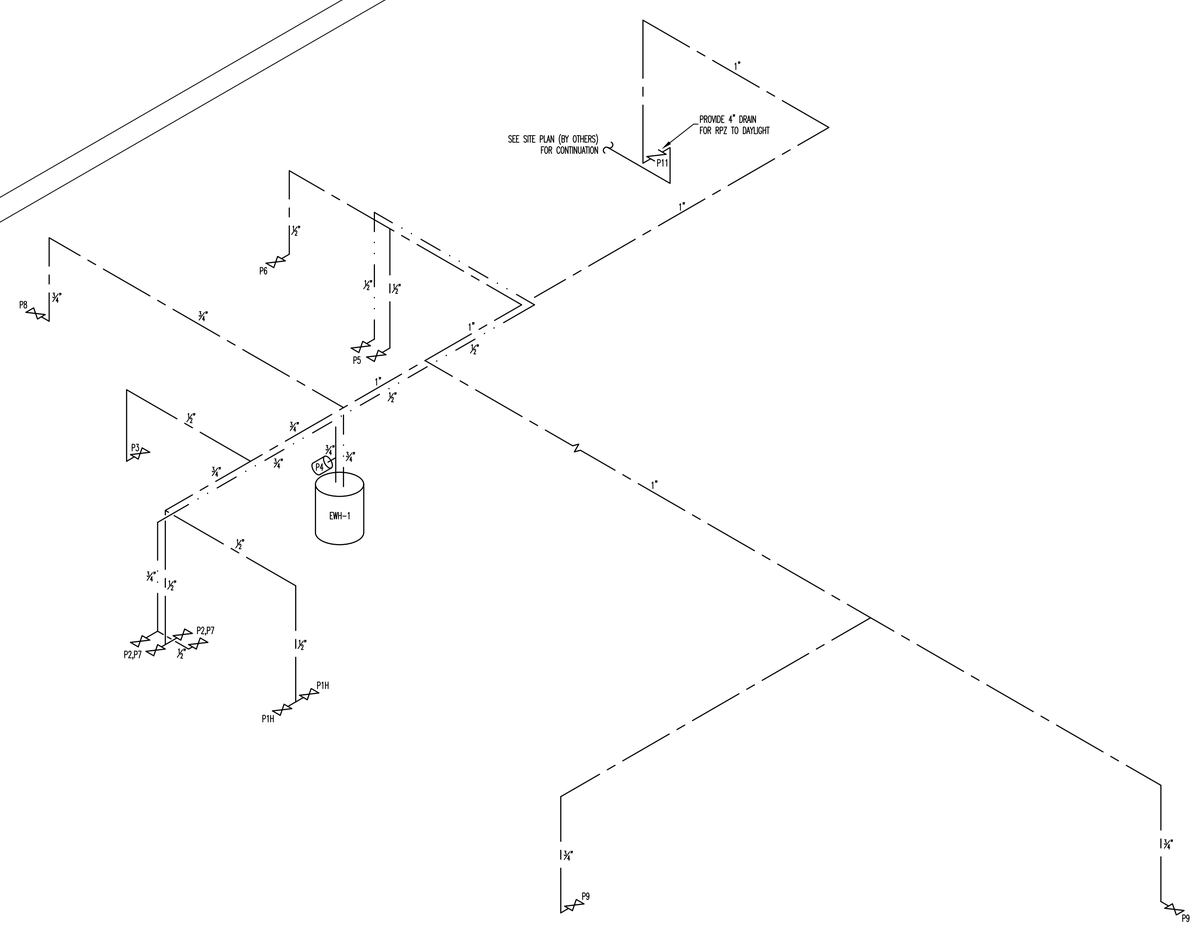

DOMESTIC SUPPLY RISER - NO SCALE | 2

Kilian Engineering Inc.
PO Box 3301, Henderson, NC 27536 | www.kilianengineering.com
(P) 252.438.8778 | CORPORATE LICENSE C-2277

NORTH CAROLINA PROFESSIONAL SEAL ENGINEER JACOB L HAMILTON 5-27-20
SEAL

KILIAN ENGINEERING CORPORATE SEAL NORTH CAROLINA INC.
SEAL

NEW BUILDING FOR:

JC POWDERCOATING

FUQUAY-VARINA, NORTH CAROLINA

REVISION:

NO	DATE	DESCRIPTION

ISSUED:

NO	DATE	DESCRIPTION
0	5-27-20	FOR PERMIT

DRAWN BY: JLH
CHECKED BY: MWK /CML

PLUMBING RISERS

SHEET NO.

P-4

PROJECT NO: 20139

GENERAL MECHANICAL NOTES:

ADMINISTRATIVE:
1. THE FOLLOWING ABBREVIATIONS SHALL APPLY TO NOTES AND PLANS:
   PC – PLUMBING CONTRACTOR, EC – ELECTRICAL CONTRACTOR,
   MC – MECHANICAL CONTRACTOR, GC – GENERAL CONTRACTOR,
   FASC – FIRE ALARM SYSTEM CONTRACTOR.
2. "PROVIDE" MEANS TO FURNISH AND INSTALL. MC SHALL ALSO INSTALL MATERIALS FURNISHED BY OTHERS AND GENERAL CONTRACTOR AS SHOWN ON THE PLANS OR NECESSARY FOR A COMPLETE INSTALLATION.
3. THE MC SHALL BE RESPONSIBLE FOR A COMPLETE AND OPERATING SYSTEM AS DESCRIBED BY THESE PLANS AND SPECIFICATIONS.
4. ALL MATERIALS AND EQUIPMENT SHALL BE DELIVERED TO THE SITE AND UNLOADED BY THE CONTRACTOR AT AN APPROVED LOCATION. THE MC SHALL PROTECT ALL MATERIALS AND EQUIPMENT FROM BREAKAGE, THEFT, AND THE ELEMENTS. ALL MATERIALS AND EQUIPMENT SHALL REMAIN THE PROPERTY OF THE MC UNTIL THE PROJECT HAS BEEN COMPLETED AND TURNED OVER TO THE OWNER.
5. THE MC SHALL INSTALL ALL MATERIALS AND EQUIPMENT IN ACCORDANCE WITH THE 2018 NORTH CAROLINA MECHANICAL AND BUILDING CODES AND ANY APPLICABLE LOCAL CODES. WHERE A CONFLICT EXISTS BETWEEN THE ABOVE REQUIREMENTS, THE MC SHALL OBTAIN CLARIFICATION FROM THE ENGINEER OR IN THE EVENT ANY PART OF THESE PLANS CONFLICTS WITH THE ABOVE REQUIREMENTS.
6. THE MC SHALL OBTAIN AND PAY FOR ALL PERMITS, FEES, AND INSPECTIONS NECESSARY FOR THE COMPLETION OF THE WORK UNDER THIS CONTRACT.
7. DO NOT SCALE THESE DRAWINGS–REFER TO ARCHITECTURAL SHEETS FOR DIMENSIONS.
8. THE MC SHALL VISIT THE SITE PRIOR TO BIDDING TO BECOME FAMILIAR WITH EXISTING CONDITIONS. THE MC SHALL CONTACT THE ENGINEER TO RESOLVE ANY DISCREPANCIES BETWEEN EXISTING CONDITIONS AND THESE PLANS. THE MC SHALL COORDINATE WITH OTHER TRADES PRIOR TO THE START OF CONSTRUCTION.
9. ALL MECHANICAL MATERIALS SHALL BE NEW AND FREE OF DEFECT AND LISTED AND LABELED BY UL OR AN APPROVED THIRD PARTY AGENCY. ANY MATERIALS FOUND TO BE DEFECTIVE SHALL BE REPLACED BY THE MC WITHOUT ADDITIONAL COST TO THE OWNER. WHERE A MANUFACTURER AND MODEL NUMBER IS GIVEN, THE CITED EXAMPLE IS INTENDED TO ESTABLISH A STANDARD OF QUALITY AND NOT TO LIMIT PRODUCTS TO A PARTICULAR MANUFACTURER. SUCH EXAMPLES ARE USED TO CONVEY A GENERAL STYLE, TYPE, CHARACTER, AND QUALITY OF THE PRODUCT DESIRED; PRODUCTS DETERMINED TO BE EQUAL BY THE ENGINEER WILL BE ACCEPTED.
10. THESE PLANS ARE DIAGRAMMATIC. THE MC SHALL ADJUST THE LOCATIONS OF EQUIPMENT, DUCTS, REGISTERS, GRILLES, ETC, TO ACCOMMODATE PLANNED AND ENCOUNTERED INTERFERENCES. THE DRAWINGS DO NOT SHOW ALL BENDS, OFFSETS, AND FITTINGS THAT MAY BE REQUIRED FOR A COMPLETE AND OPERATIONAL SYSTEM. THE MC SHALL MAKE ALLOWANCES FOR SUCH DEVIATIONS AND CONTINGENCIES IN BID TO IMPLEMENT THEM WITHOUT ADDITIONAL COST TO THE OWNER.
11. ELECTRICAL CONTRACTOR SHALL BE RESPONSIBLE FOR ALL POWER CONNECTIONS TO THE MECHANICAL EQUIPMENT. MECHANICAL CONTRACTOR SHALL BE RESPONSIBLE FOR ALL CONTROL WIRING.
12. IT IS THE MC'S RESPONSIBILITY TO VERIFY THAT ITEMS FURNISHED FOR THIS CONTRACT WILL FIT IN THE SPACE AVAILABLE. THE MC SHALL MAKE FIELD MEASUREMENTS AS NECESSARY TO DETERMINE SPACE REQUIREMENTS. IF THE MC MUST ALTER EQUIPMENT DUE TO SPACE CONSIDERATIONS, THE MC SHALL PROVIDE SIZES AND SHAPES THAT FIT THE INTENT OF THESE DRAWINGS AND SPECIFICATIONS.
13. MC SHALL COORDINATE WITH THE ELECTRICAL CONTRACTOR REGARDING THE ELECTRICAL REQUIREMENTS OF ALL EQUIPMENT BEING PROVIDED.
14. MAINTAIN CLEARANCES FOR ALL EQUIPMENT ACCORDING TO MANUFACTURER'S RECOMMENDATIONS FOR SERVICEABILITY. ALL ROOFTOP EQUIPMENT MUST BE A MINIMUM OF 10 FEET FROM ROOF EDGE.
15. MC SHALL FURNISH A BOUND SET OF OPERATING AND MAINTENANCE INSTRUCTIONS FOR ALL EQUIPMENT TO THE OWNER UPON COMPLETION OF THE PROJECT. MC SHALL PROVIDE ALL DOCUMENTATION TO THE OWNER AS NECESSARY TO SUBMIT FOR FACTORY WARRANTIES.
16. CONTRACTOR SHALL PROTECT ALL HVAC EQUIPMENT FROM CONSTRUCTION AND SHEET ROCK DUST DURING CONSTRUCTION. ALL FILTERS SHALL BE REPLACED WITH NEW AT THE COMPLETION OF THE PROJECT.
17. ALL EQUIPMENT INSTALLED ON ROOF MUST BE WITHIN THE ROOF SCREEN.
18. IF A ROOF PENETRATION IS REQUIRED AND THE ROOF IS UNDER WARRANTY, USE THE AUTHORIZED ROOFER. PROVIDE DOCUMENTATION.
19. ALL PIPING, WIRING, CONDUIT, INSULATION, EQUIPMENT, SUPPORTS, ETC. SHALL BE SUITABLE FOR INSTALLATION IN A RETURN PLENUM AS NECESSARY. COORDINATE WITH OTHER TRADES ON LOCATIONS OF ALL PLENUMS.
20. MC SHALL COORDINATE WITH THE GENERAL CONTRACTOR TO ENSURE ALL APPLICABLE CONSTRUCTION WASTE IS RECYCLED DURING THE CONSTRUCTION PHASE OF THE PROJECT.

MATERIALS:
1. THE MC SHALL PROVIDE ALL DX UNITARY HEATING AND COOLING EQUIPMENT AS SCHEDULED ON THE DRAWINGS. AIR–COOLED SPLIT SYSTEM HEAT PUMPS AND AIR–CONDITIONERS SHALL BE BY TRANE, CARRIER, OR YORK. AIR–COOLED ROOFTOP PACKAGE HEAT PUMPS, GAS–ELECTRIC UNITS, AND AIR–CONDITIONERS SHALL BE BY TRANE, CARRIER, OR YORK. GAS FURNACES SHALL BE BY TRANE, CARRIER, OR YORK. THE MC SHALL PROVIDE FACTORY AND FIELD INSTALLED ACCESSORIES AS SCHEDULED OR AS NECESSARY FOR A COMPLETE AND OPERATIONAL HVAC SYSTEM.
2. THE MC SHALL PROVIDE ALL EXHAUST AND SUPPLY FANS AS SCHEDULED. FANS SHALL BE BY GREENHECK, LOREN COOK, TWIN CITY, OR PENNBARRY.
3. DUCTWORK IS SHOWN WITH FREE AREA DIMENSIONS. ALL DUCTWORK SHALL BE FABRICATED AND INSTALLED IN ACCORDANCE WITH SMACNA LOW PRESSURE DUCT STANDARD, 2 INCH S.P.
4. EXTERNAL DUCT INSULATION AND FACTORY–INSULATED FLEXIBLE DUCT SHALL BE LEGIBLY PRINTED OR IDENTIFIED AT INTERVALS NOT GREATER THAN 36 INCHES WITH THE NAME OF THE MANUFACTURER, THE THERMAL RESISTANCE R–VALUE AT THE SPECIFIED INSTALLED THICKNESS AND THE FLAME SPREAD AND SMOKE–DEVELOPED INDEXES OF THE COMPOSITE MATERIALS. ALL DUCT INSULATION PRODUCT R–VALUES SHALL BE BASED ON INSULATION ONLY, EXCLUDING AIR FILMS, VAPOR RETARDERS OR OTHER DUCT COMPONENTS, AND SHALL BE BASED ON TESTED C–VALUES AT 75°F MEAN TEMPERATURE AT THE INSTALLED THICKNESS, IN ACCORDANCE WITH RECOGNIZED INDUSTRY PROCEDURES. THE INSTALLED THICKNESS OF DUCT INSULATION USED TO DETERMINE ITS R–VALUES SHALL BE DETERMINED AS FOLLOWS:
   - 4.1. FOR DUCT BOARD, DUCT LINER AND FACTORY–MADE RIGID DUCTS NOT NORMALLY SUBJECTED TO COMPRESSION, THE NOMINAL INSULATION THICKNESS SHALL BE USED.
   - 4.2. FOR DUCT WRAP, THE INSTALLED THICKNESS SHALL BE ASSUMED TO BE 75 PERCENT (25–PERCENT COMPRESSION) OF NOMINAL THICKNESS.
   - 4.3. FOR FACTORY–MADE FLEXIBLE AIR DUCTS, THE INSTALLED THICKNESS SHALL BE DETERMINED BY DIVIDING THE DIFFERENCE BETWEEN THE ACTUAL OUTSIDE DIAMETER AND NOMINAL INSIDE DIAMETER BY TWO.
5. ALL INSULATION CONTAINING FIBROUS MATERIALS EXPOSED TO AIRFLOW SHALL BE RATED FOR THAT EXPOSURE OR SHALL BE ENCAPSULATED. INSULATING PROPERTIES FOR ALL MATERIALS SHALL MEET OR EXCEED INDUSTRY STANDARDS. POLYSTYRENE PRODUCTS SHALL MEET ASTM C578. ALL INSULATION SHALL HAVE FORMALDEHYDE EMISSIONS NOT GREATER THAN 0.05 PPM. THE MAXIMUM FLAME SPREAD AND SMOKE DEVELOPED INDEX FOR INSULATION SHALL MEET THE REQUIREMENTS OF THE LOCAL CODES AND ORDINANCES ADOPTED BY THE JURISDICTION IN WHICH THE BUILDING IS LOCATED.
6. MASTIC USED TO SEAL DUCTWORK SHALL BE LISTED AND LABELED IN ACCORDANCE WITH UL 181A–95 OR UL 181B–98. MAINTAIN AMBIENT TEMPERATURES AND CONDITIONS REQUIRED BY MANUFACTURER OF ADHESIVES, MASTICS, AND INSULATION CEMENTS. DO NOT INSTALL DUCT SEALANT WHEN TEMPERATURES ARE LESS THAT THOSE RECOMMENDED BY THE SEALANT MANUFACTURER.
7. ALL ADHESIVES AND SEALANTS SHALL HAVE VOC CONTENT BELOW 20 GRAMS PER LITER AND WHICH MEET THE REQUIREMENTS OF THE MANUFACTURER OF THE PRODUCTS BEING ADHERED OR INVOLVED. ADHESIVES AND SEALANTS SHALL CONTAIN NO HEAVY METALS OR FORMALDEHYDE.
8. FACTORY–MADE AIR DUCTS AND CONNECTORS SHALL COMPLY WITH UL 181–96.
9. FLEXIBLE DUCT SHALL BE UL LISTED CLASS 0 OR CLASS 1, INSULATED, AND COMPLY WITH UL 181. FLEXIBLE DUCT SHALL BE FACTORY FORMED, COMPOSED OF SPIRAL WOUND CORROSION RESISTANT WIRE BONDED TO AN INNER FABRIC LINER. DUCT SHALL BE FACTORY INSULATED WITH A FOIL VAPOR BARRIER JACKET. CONNECT TO RIGID DUCT WITH SPIN–IN FITTING AND DAMPER. FLEXIBLE DUCTS AND AIR CONNECTORS SHALL NOT PASS THROUGH ANY FIRE RESISTANCE RATED ASSEMBLY.
10. THE MC SHALL PROVIDE ALL DIFFUSERS GRILLES, LOUVERS, AND OTHER AIR DISTRIBUTION OUTLETS AND INLETS. LOUVERS, GRILLES, AND DIFFUSERS SHALL BE INSTALLED IN ACCORDANCE WITH THE MANUFACTURER'S INSTALLATION INSTRUCTIONS. FOR LAY–IN CEILINGS, INSTALL SUPPORT FROM THE STRUCTURE FOR EACH DIFFUSER OR DAMPER. AIR DISTRIBUTION OUTLETS AND INLETS SHALL BE BY HART & COOLEY, PRICE, METAL–AIRE, NAILOR, OR CARNES.
11. AIR FILTERS SHALL BE INSTALLED IN ACCORDANCE WITH SECTION 605 OF THE 2018 NC MECHANICAL CODE.
12. THE MC SHALL PROVIDE ALL REFRIGERATION PIPING. ALL PIPE AND FITTINGS SHALL BE TYPE ACR HARD COPPER TUBING WITH SWEAT FITTINGS. REFRIGERATION LINES SHALL BE RUN NEATLY. WHERE A GROUP OF LINES ARE RUN, TRAPEZE HANGERS MAY BE USED. DO NOT USE CHAIN OR WIRE HANGERS. WRAP TUBING WITH RUBBER TAPE AT EACH CLAMP OR HANGER. FOR COVERED PIPES, HANGERS SHALL FIT AROUND THE OUTSIDE OF THE COVERING WITH 12 GAUGE GALVANIZED STEEL SHIELDS OF A LENGTH EQUAL TO THE OUTSIDE DIAMETER OF THE INSULATION AND COVERING 3/4 OF THE CIRCUMFERENCE OF THE INSULATION. SAGS SHALL NOT BE PERMISSIBLE. HORIZONTAL LINES SHALL PITCH DOWN NOT LESS THAN 1 INCH IN 40 FEET. INSULATE WITH 1 INCH CLOSED CELL ARMAFLEX TYPE INSULATION WITH A FLAME DENSITY RATING LESS THAN 25 AND A SMOKE DENSITY RATING LESS THAN 50. ALL JOINTS AND SPLICES IN INSULATION SHALL BE TAPED AND AIR TIGHT. SOLDER REFRIGERATION LINES USING 15 PERCENT SILVER SOLDER AND EVACUATE LINES TO 300 MICRONS. PROVIDE MOISTURE INDICATING SIGHT GLASS AND FILTER DRYER IN LIQUID LINE. PROVIDE OIL TRAPS AND DOUBLE RISERS IN REFRIGERANT SUCTION AND HOT GAS LINES WHERE REQUIRED TO PREVENT OIL SLUGGING AT THE COMPRESSOR AND INSURE PROPER LUBRICATION. MC SHALL BE RESPONSIBLE FOR SEALING LINE SET PENETRATIONS OF ANY RATED ASSEMBLIES IN ACCORDANCE WITH A SYSTEM LISTED IN THE UL DIRECTORY FOR THE SPECIFIC ASSEMBLY BEING PENETRATED. SEE ARCHITECTURAL PLANS FOR A LIST OF ALL UL FIRE RATED ASSEMBLIES.

METHODS:
1. INSULATE DUCTWORK WITH FIBERGLASS DUCT WRAP; INSTALLED R–VALUE SHALL BE A MINIMUM R–6. COVERINGS AND LININGS, INCLUDING ADHESIVES WHEN USED, SHALL HAVE A FLAME SPREAD INDEX NOT MORE THAN 25 AND A SMOKE–DEVELOPED INDEX NOT MORE THAN 50 WHEN TESTED IN ACCORDANCE WITH ASTM E 84. ALL NEW DUCTWORK SHALL RECEIVE INSULATION ON THE OUTSIDE. INSTALL DUCT WRAP INSULATION WITH FACING OUTSIDE SO THAT TAPE FLAP OVERLAPS INSULATION AND FACING OF ADJACENT PIECE OF DUCT WRAP. INSULATION SHALL BE TIGHTLY BUTTED. FOR RECTANGULAR DUCTS, INSTALL SO INSULATION IS NOT EXCESSIVELY COMPRESSED AT DUCT CORNERS. STAPLE SEAMS APPROXIMATELY 6 INCHES ON CENTER WITH OUTWARD CLINCHING STAPLES. SEAL SEAMS WITH PRESSURE SENSITIVE TAPE MATCHING THE FACING. FOR RECTANGULAR DUCTS 24 INCHES IN WIDTH OR GREATER, SECURE DUCT WRAP TO THE BOTTOM OF THE DUCT WITH MECHANICAL FASTENERS SPACED 18 INCHES ON CENTER TO PREVENT SAGGING OF INSULATION. ADJACENT SECTIONS OF DUCT WRAP SHALL BE TIGHTLY BUTTED WITH THE 2 INCH TAPE FLAP OVERLAPPING. ALL TEARS, PUNCTURES, ETC. OF THE DUCT WRAP INSULATION SHALL BE SEALED WITH TAPE OR MASTIC TO PROVIDE A VAPOR TIGHT SYSTEM. INSULATION SHALL BE BY KNAUF INSULATION, OWENS CORNING CORP, OR CERTAINTEED CORPORATION.
2. VERIFY THAT DUCTS HAVE BEEN TESTED BEFORE APPLYING INSULATION MATERIALS. VERIFY THAT DUCT SURFACES ARE CLEAN, DRY AND FREE OF FOREIGN MATERIAL PRIOR TO INSULATING. DUCT COVERINGS SHALL NOT PENETRATE A WALL OR FLOOR REQUIRED TO HAVE A FIRE–RESISTANCE RATING OR REQUIRED TO BE FIRE BLOCKED.
3. WHERE DUCTS ARE CONNECTED TO EXTERIOR WALL LOUVERS AND DUCT OUTLET IS SMALLER THAN LOUVER FRAME, PROVIDE BLANK–OUT PANELS SEALING LOUVER AREA AROUND DUCT. USE SAME MATERIAL AS DUCT, PAINTED BLACK ON EXTERIOR SIDE; SEAL TO LOUVER FRAME AND DUCT.
4. PROVIDE DUCT ACCESS DOORS FOR INSPECTION AND CLEANING BEFORE AND AFTER FILTERS, COILS, FANS, AUTOMATIC DAMPERS, AT FIRE DAMPERS, COMBINATION FIRE AND SMOKE DAMPERS.
5. CONSTRUCT T's, BENDS, AND ELBOWS WITH RADII OF NOT LESS THAN 1–1/2 TIMES THE WIDTH OF THE DUCT ON CENTERLINE. WHERE NOT POSSIBLE AND WHERE RECTANGULAR ELBOWS MUST BE USED, PROVIDE TURNING VANES.
6. INCREASE DUCT SIZES GRADUALLY, NOT EXCEEDING 15 DEGREES DIVERGENCE; MAXIMUM OF 30 DEGREES DIVERGENCE UPSTREAM OF EQUIPMENT AND 45 DEGREES CONVERGENCE DOWNSTREAM.
7. IT SHALL BE THE RESPONSIBILITY OF THE MC TO SUSPEND AND SUPPORT ALL EQUIPMENT, DUCTWORK, DIFFUSERS, AND OTHER MATERIALS FOLLOWING RECOGNIZED ENGINEERING PRACTICES AND USING STANDARD, COMMERCIALLY ACCEPTED HANGERS AND SUSPENSION EQUIPMENT. ALL HVAC EQUIPMENT SHALL BE SECURELY MOUNTED TO THE BUILDING STRUCTURE AND SHALL NOT RELY ON CEILING OR WALL SURFACES FOR SUPPORT. THE SUPPORT ATTACHMENT SHALL SUPPORT THE WEIGHT OF THE EQUIPMENT PLUS THE WEIGHT OF THE SUPPORT ATTACHMENT ITSELF. SUPPORT FROM THE TOP CHORD OF THE ROOF JOISTS, GIRDERS, AND BEAMS. THE BOTTOM CHORD IS NOT TO BE USED FOR EQUIPMENT OR PIPING SUPPORT. HANGERS SHALL NOT BE ATTACHED TO CORRUGATED STEEL DECKING.
8. DUCTS SHALL BE SUPPORTED IN ACCORDANCE WITH SMACNA AT INTERVALS NOT EXCEEDING 10 FEET. DUCTS 36 INCHES OR LARGER SHALL HAVE TRAPEZE TYPE HANGERS SUSPENDED WITH THREADED ROD. SUPPORT DUCTS FROM BAR JOISTS, GIRDERS, OR BEAMS.
9. CHECK LOCATIONS OF AIR OUTLETS AND INLETS AND MAKE NECESSARY ADJUSTMENTS IN POSITION TO CONFORM WITH ARCHITECTURAL FEATURES, SYMMETRY, AND LIGHTING ARRANGEMENT. COORDINATE WITH SPRINKLER CONTRACTOR IF APPLICABLE.
10. PROVIDE BALANCING DAMPERS AT POINTS ON SUPPLY WHERE BRANCHES ARE TAKEN FROM LARGER DUCTS AS REQUIRED FOR AIR BALANCING. INSTALL MINIMUM 2 DUCT WIDTHS FROM DUCT TAKE–OFF. PROVIDE BALANCING DAMPERS ON DUCT TAKE–OFFS TO DIFFUSERS, AND REGISTERS, REGARDLESS OF WHETHER DAMPERS ARE SPECIFIED AS PART OF THE DIFFUSER OR REGISTER ASSEMBLY. ADJUST AIR HANDLING AND DISTRIBUTION SYSTEMS TO PROVIDE DESIGN SUPPLY, RETURN, AND EXHAUST AIR QUANTITIES AT SITE ALTITUDE.
11. MC SHALL INSTALL FIRE DAMPERS AT EACH PENETRATION OF A RATED WALL AS INDICATED ON THE DRAWINGS OR AS REQUIRED BY THE AUTHORITY HAVING JURISDICTION. FIRE DAMPERS SHALL BE UL LABELED (UL 555), CURTAIN TYPE, WITH INTEGRAL FACTORY SLEEVE AND BLADES LOCATED OUTSIDE THE AIR STREAM. INSTALLATION OF ALL FIRE DAMPERS SHALL BE IN ACCORDANCE WITH THE MANUFACTURER'S INSTALLATION INSTRUCTIONS AND SECTION 607 OF THE 2018 NC MECHANICAL CODE. PROVIDE ACCESS PANELS FOR TESTING AND SERVICE AS NECESSARY. MC SHALL PROVIDE RADIATION DAMPERS AND THERMAL BLANKETS FOR ALL PENETRATIONS OF RATED CEILING ASSEMBLIES. RADIATION DAMPERS SHALL BE UL LABELED (UL 555C) AND INSTALLED IN ACCORDANCE WITH THE MANUFACTURER'S SPECIFIC INSTALLATION INSTRUCTIONS. FIRE DAMPERS, COMBINATION FIRE/SMOKE DAMPERS, AND CEILING RADIATION DAMPERS SHALL BE BY RUSKIN, NAILOR, OR LLOYD INDUSTRIES.
12. MC SHALL INSTALL A SMOKE DETECTOR–UL LISTED FOR DUCT INSTALLATION (UL 268A) IN EACH UNIT'S RETURN UPSTREAM OF ANY FILTERS, OUTSIDE AIR CONNECTIONS, OR DECONTAMINATION EQUIPMENT. DUCT SMOKE DETECTORS SHALL BE INSTALLED IN ACCORDANCE WITH NFPA 72. DUCT SMOKE DETECTOR SUPERVISION SHALL COMPLY WITH 606.4.1 OF THE 2018 NC MECHANICAL CODE. IF THE BUILDING IS (TO BE) EQUIPPED WITH A FIRE ALARM SYSTEM, THE FIRE ALARM SYSTEM CONTRACTOR SHALL FURNISH AND WIRE ALL DUCT SMOKE DETECTORS. IF THE BUILDING IS NOT PROVIDED WITH A FIRE ALARM SYSTEM, THE MC SHALL FURNISH AND WIRE THE DUCT SMOKE DETECTORS AND A/V DEVICE. IT SHALL BE THE RESPONSIBILITY OF THE MC TO INSTALL ALL SMOKE DUCT DETECTORS PER NFPA AND MFG'S INSTALLATION INSTRUCTIONS REGARDLESS OF WHO FURNISHES THE DEVICES.
13. MC SHALL INSTALL PROGRAMMABLE THERMOSTATS AS SHOWN ON THE PLANS. THERMOSTAT SHALL BE MOUNTED AT 48 INCHES AFF. THERMOSTATS SHALL MEET THE REQUIREMENTS OF SECTION C403.2.4 OF THE 2018 NORTH CAROLINA ENERGY CONSERVATION CODE.
14. FRESH AIR INTAKES SHALL BE INSTALLED ON ALL UNITS AS SHOWN ON DRAWINGS. MAINTAIN 10 FEET OF DISTANCE BETWEEN FRESH AIR INTAKES AND ALL EXHAUST TERMINATIONS AND PLUMBING VENT THRU ROOFS.
15. MC SHALL INSTALL ALL EXHAUST FANS AND VENT TO THE BUILDING'S EXTERIOR. EC SHALL SWITCH FANS WITH LIGHTS OR ON SEPARATE SWITCH AS SHOWN.
16. P–TRAPS MUST BE INSTALLED ON ALL UNITS. MC SHALL INSTALL AUXILIARY DRAIN PANS UNDER OVERHEAD AIR HANDLERS AND AN AUTOMATIC CUT–OFF FLOAT SWITCH FOR EACH. P–TRAPS AND CONDENSATE LINES SHALL BE 1 INCH. P–TRAPS AND CONDENSATE LINES MAY BE PVC WHERE NOT LOCATED IN PLENUMS; OTHERWISE, THEY SHALL BE TYPE M COPPER.
17. INSTALL BACKDRAFT DAMPERS ON FRESH AIR AND EXHAUST DUCTS WHERE THEY PENETRATE THE THERMAL ENVELOPE PER NORTH CAROLINA ENERGY CONSERVATION CODE C402.5.5

MECHANICAL NOTES | 1

SPLIT SYSTEM HEAT PUMP SCHEDULE

MARK	MFG / MODEL #	NOMINAL CAPACITY	REF LINES		MOTORS		EFFICIENCIES			ELECTRICAL			WEIGHT	REMARKS
		TONS	GAS	LIQ	COMPRESSOR NO.	COND. FAN NO.	SEER / EER	COP @ 17°	HSPF	V/PH	MCA	MOCP	LBS	
HP-1	TRANE 4TWR7024A1	2	5/8	3/8	1	1	17.25/13.5	2.70	9.0	208/1	15	25	236	1-9

SPLIT SYSTEM AIR HANDLER SCHEDULE

MARK	MFG / MODEL #	NOMINAL CAPACITY	AIR FLOW		FAN MOTORS		HEATING CAPACITY			COOLING CAPACITY			ELECTRICAL			WEIGHT	REMARKS
			SUPPLY	MIN. OA	SUPPLY	ESP	OUTPUT	AUX ELEC HEAT		EAT WB/DB	TOTAL	SENSIBLE	V/PH	MCA	MOCP		
		TONS	CFM	CFM	NO.	in wg	MBH	kW	STAGES	°F	MBH	MBH				LBS	
AHU-1	TRANE TAM9A0B30V31	2.5	800	100	1	0.25	15.0	2.88	1	67/80	24.5	18.7	208/1	22	25	138	2-10

1. PROVIDE CONCRETE PAD FOR UNIT TO SIT ON
2. PROVIDE HEAT STRIP OUTDOOR TEMPERATURE LOCKOUT TO PREVENT SUPPLEMENTAL HEAT OPERATION IN RESPONSE TO THE THERMOSTAT BEING CHANGED TO A WARMER SETTING. SET NO LOWER THAN 35°F AND NO HIGHER THAN 40°F.
3. REPLACE ALL FILTERS AT PROJECT'S COMPLETION
4. PROVIDE 7-DAY PROGRAMMABLE THERMOSTAT WITH NIGHT-TIME SET BACK
5. CONSULT MANUFACTURER ON LINE SET LENGTHS EXCEEDING 60FT
6. HEATER RATED AT 208V
7. OR EQUAL BY CARRIER, LENNOX, OR YORK
8. ANY EQUIPMENT SUBSTITUTIONS MUST EQUAL OR EXCEED EFFICIENCIES LISTED (RATINGS PER ARI)
9. MAINTAIN MANUFACTURER'S RECOMMENDED CLEARANCES
10. AIR HANDLER UPSIZED TO MEET MIN ENERGY REQUIREMENTS, AHU MAY BE SUBSTITUTED FOR 2-TON UNIT WITH EQUAL EFFICIENCIES (SEE NOTE 8).

DUCTLESS SPLIT SYSTEM HEAT PUMP SCHEDULE

MARK	OUTSIDE UNIT MFG / MODEL #	INSIDE UNIT MODEL #	NOM CAPACITY	SUPPLY AIR	HEATING @ 17°F	TOT COOLING	SEN COOLING	VOLT/PH	SEER	HSPF	MCA	MOCP	NOTE
			TONS	CFM	MBH	MBH	MBH				AMPS	AMPS	
MS-1	MITSUBISHI / MUZ-FH06NA	MSZ-FH06NA	0.5	300	5.9	6.0	4.5	208/1	33.1	13.5	11.0	15.0	1-6

1. PROVIDE CONCRETE PAD FOR OUTDOOR UNIT TO SIT ON
2. PROVIDE 7-DAY PROGRAMMABLE THERMOSTAT WITH NIGHT-TIME SET BACK
3. HEATER RATED AT 208V
4. OR EQUAL BY DAIKIN, LG, OR SAMSUNG
5. ANY EQUIPMENT SUBSTITUTIONS MUST EQUAL OR EXCEED EFFICIENCIES LISTED (RATINGS PER ARI)
6. MAINTAIN MANUFACTURER'S RECOMMENDED CLEARANCES

EXHAUST FAN SCHEDULE

MARK	MFG / MODEL #	TYPE	ESP (in WG)	CFM	VOLT/PH	FLA	SONES	NOTES
EF-1,2	COOK - GC-148	CEILING	0.40	100	277/1	0.8	2.5	1-3
EF-3	COOK - 330ACEB	ROOF	0.10	6000	480/3	7.6	4.8	1-3

1. PROVIDE WITH PITCHED ROOF CURB & CAP FOR FLAT OR SLOPED ROOF, OR HOODED WALL WITH BACKDRAFT DAMPER CAP AS APPLICABLE.
2. PROVIDE WITH SQUARE TO ROUND DUCT ADAPTER AS NECESSARY
3. OR EQUAL BY GREENHECK OR PENNBARRY OR TWIN CITY

REGISTER & GRILLE SCHEDULE

MARK	MFG	MODEL #	SIZE	MOUNTING	DESCRIPTION	NOTES
A	HART & COOLEY	HVS	24X24	LAY-IN	4-WAY DIFFUSER, BRIGHT WHITE	1,2
R	HART & COOLEY	94AT	24X24	LAY-IN	STEEL, LAY IN, RETURN GRILLE	1

1. OR EQUAL BY PRICE, METAL-AIRE, CARNES, TITUS OR NAILOR.
2. PROVIDE WITH FOIL LINED, MOLDED INSULATION BLANKET.

GAS UNIT HEATER SCHEDULE

MARK	MFG / MODEL #	INPUT	HEAT OUTPUT	AIR FLOW	VOLT/PH	FLA	MOCP	WEIGHT	NOTES
		MBH	MBH	CFM		AMPS	AMPS	LBS	
UH-1,2,3	TRANE / GVPE-175	175.0	145.2	2000	120/1	14.2	20.0	250.0	1

1. PROVIDE REMOTE THERMOSTAT.

LOUVER SCHEDULE

MARK	MFG	MODEL #	SIZE	DESCRIPTION	NOTES
L	RUSKIN	ELM6375DX	60X60	ALL ALUMINUM DRAINABLE LOUVER	1-3

1. OR APPROVED EQUAL.
2. PROVIDE BIRD/INSECT SCREEN.
3. PRESSURE RELIEF OPEN WITH SPRING CLOSE.

Ventilation Calculation (For Office)

Room Name(s)	Zone Type	Area (sq.ft.)	Rp	Ra	Default Occupancy	Pz	Ez	Airflow to Zone (cfm)	Required Exhaust (cfm)
Office Area	Office Space	630	5	0.06	5	3.15	0.8	800	0
	N/A		0	0	0	0.00	0.8		0
	N/A		0	0	0	0.00	0.8		0
	N/A		0	0	0	0.00	0.8		0
	N/A		0	0	0	0.00	0.8		0

K-12 School? No

Maximum Zp: 0.083672
Ev: 1
Actual System Population: 5

Uncorrected Intake 63 cfm
Outdoor Air Intake *63 cfm*
Percent of Unit Air 8%

Ventilation Calculation (For Shop)

Room Name(s)	Zone Type	Area (sq.ft.)	Rp	Ra	Default Occupancy	Pz	Ez	Airflow to Zone (cfm)	Required Exhaust (cfm)
Workshop	Wood/Metal Shop	9050	10	0.18	20	181.00	0.8	5600	4525
	N/A		0	0	0	0.00	0.8		0
	N/A		0	0	0	0.00	0.8		0
	N/A		0	0	0	0.00	0.8		0
	N/A		0	0	0	0.00	0.8		0

K-12 School? No

Maximum Zp: 0.767634
Ev: 0.3
Actual System Population: 5

Uncorrected Intake 1679 cfm
Outdoor Air Intake *5597 cfm*
Percent of Unit Air 100%

MECHANICAL SYSTEM, SERVICE SYSTEMS, AND EQUIPMENT

METHOD OF COMPLIANCE	PRESCRIPTIVE
THERMAL ZONE	ZONE 4A
EXTERIOR DESIGN CONDITIONS	
HEATING DESIGN DRY BULB	23.1°F
COOLING DESIGN DRY BULB	91.7°F
COOLING DESIGN WET BULB	75.6°F
INTERIOR DESIGN CONDITIONS	
HEATING DESIGN DRY BULB	70°F
COOLING DESIGN DRY BULB	75°F
COOLING RELATIVE HUMIDITY	50%
OFFICE AREA	
HEATING LOAD:	11,000 BTU/H
SENSIBLE COOLING LOAD:	8,750 BTU/H
LATENT COOLING LOAD:	4,000 BTU/H
WORKSHOP AREA	
HEATING LOAD:	405,000 BTU/H
MECHANICAL SPACING CONDITIONING SYSTEM:	
UNITARY	AIR COOLED DX
DESCRIPTION OF UNIT(S)	SPLIT SYSTEMS
BOILER	N/A
TOTAL BOILER OUTPUT	N/A
CHILLER	N/A
TOTAL CHILLER CAPACITY	N/A
EQUIPMENT EFFICIENCIES:	SEE SCHEDULES
EQUIPMENT SCHEDULES WITH MOTORS (MECHANICAL SYSTEMS):	SEE SCHEDULES

DESIGNER STATEMENT:

TO THE BEST OF MY KNOWLEDGE, THE MECHANICAL DESIGN FOR THIS BUILDING COMPLIES WITH MECHANICAL AND EQUIPMENT REQUIREMENTS OF THE 2018 NORTH CAROLINA STATE BUILDING CODE AND 2018 NORTH CAROLINA ENERGY CONSERVATION CODE.

MECHANICAL SCHEDULES | 2

GAS LINE SIZING VERIFICATION TABLE

PER 2018 NC FUEL GAS CODE TABLE 402.4 (27)

SECTION	GAS LOAD	LINE SIZE	CAPACITY	PRESSURE
	MBTU/H	INCHES	CFH	PSI
001	3225	1 1/2	6410	2
002	3050	1 1/2	6410.0	2
003	175	3/4	1110	2
004	2875	1 1/2	6410.0	2
005	400	1	2080	2
006	2475	1 1/2	6410.0	2
007	2300	1 1/2	6410.0	2
008	175	3/4	1110	2
EQUIVALENT LENGTH: 200FT				

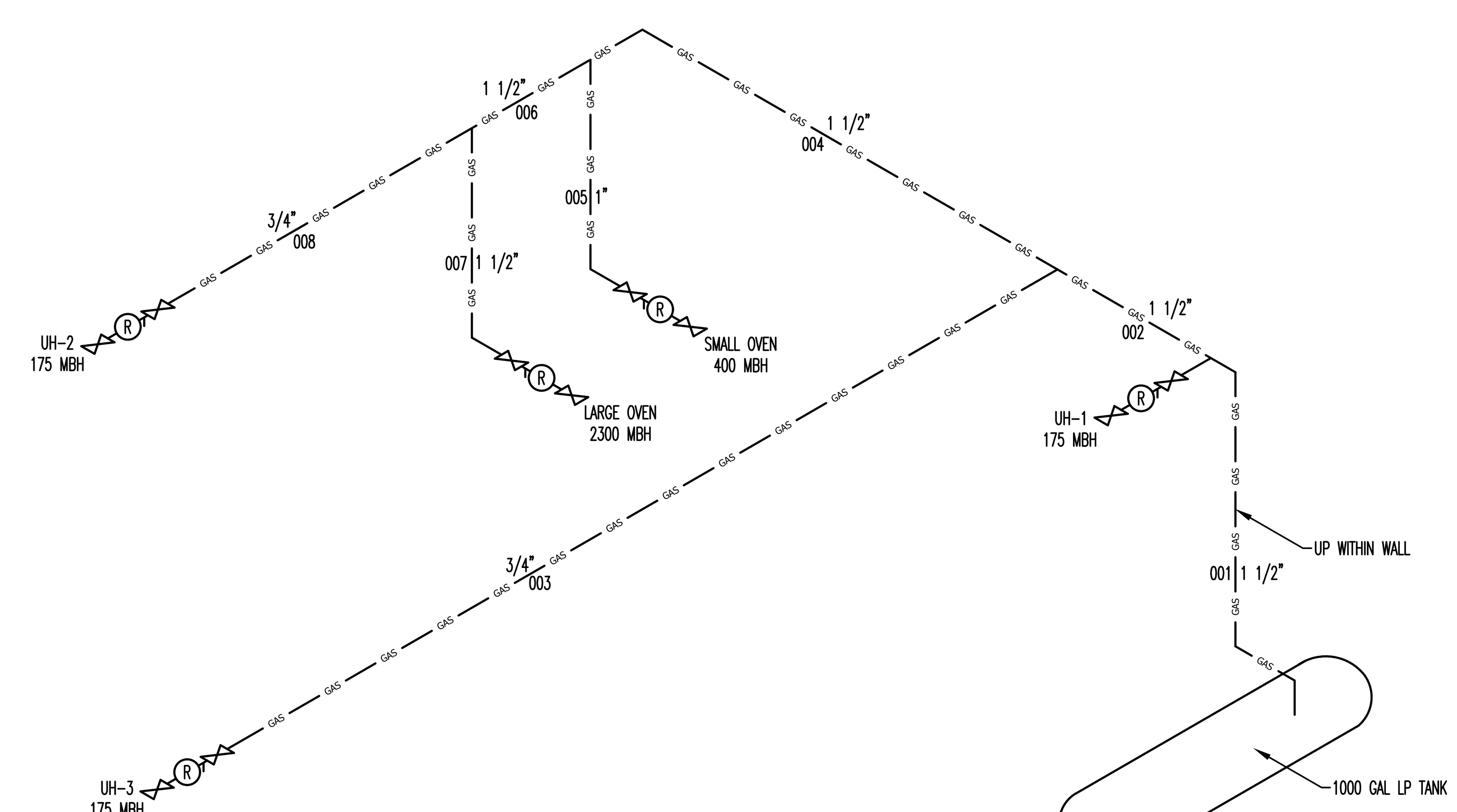

LP GAS RISER - NO SCALE | 3

Kilian Engineering Inc.
PO Box 3301, Henderson, NC 27536 | www.kilianengineering.com
(P) 252.438.8778 | CORPORATE LICENSE C-2277

NORTH CAROLINA PROFESSIONAL ENGINEER SEAL 048012 JACOB L HAMILTON 5-27-20
SEAL

KILIAN ENGINEERING, INC. CORPORATE SEAL NORTH CAROLINA
SEAL

NEW BUILDING FOR:
JC POWDERCOATING
FUQUAY-VARINA, NORTH CAROLINA

REVISION:

NO.	DATE	DESCRIPTION

ISSUED:

NO.	DATE	DESCRIPTION
0	5/27/20	FOR PERMIT

DRAWN BY: JLH
CHECKED BY: MWK/CML

MECHANICAL NOTES AND SCHEDULES

SHEET NO.
M-1

PROJECT NO: 20139

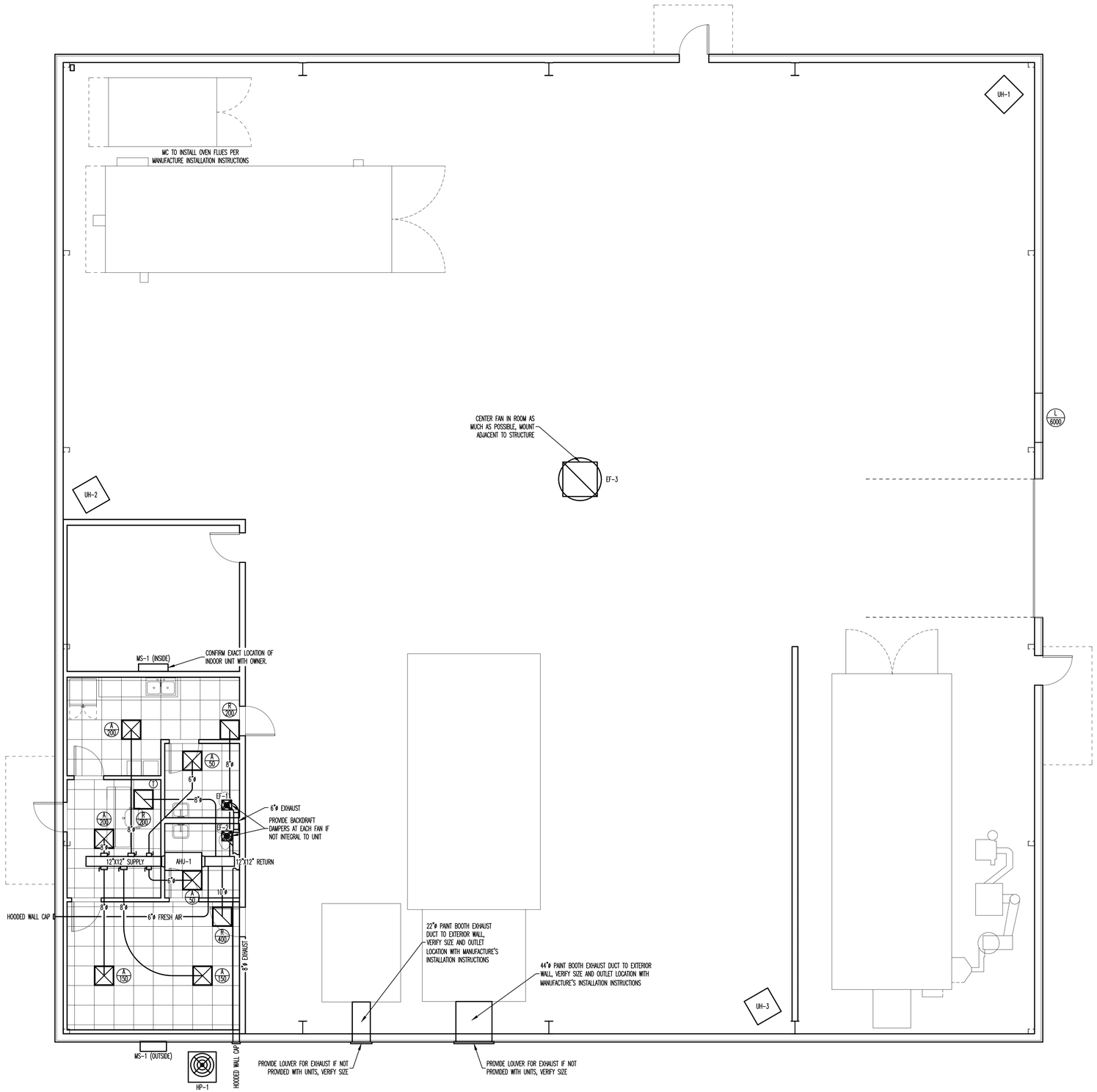

NO FIRE RATED ASSEMBLIES

MECHANICAL PLAN - SCALE: 1/4" = 1' | 1

Kilian Engineering Inc.
PO Box 3301 - Henderson, NC 27536 | www.kilianengineering.com
(P) 252.438.8778 | CORPORATE LICENSE C-2277

NORTH CAROLINA PROFESSIONAL SEAL ENGINEER JACOB L HAMILTON 5-27-20

SEAL

KILIAN ENGINEERING CORPORATE SEAL NORTH CAROLINA

SEAL

NEW BUILDING FOR:

JC POWDERCOATING

FUQUAY-VARINA, NORTH CAROLINA

REVISION:

NO.	DATE	DESCRIPTION

ISSUED:

NO.	DATE	DESCRIPTION
0	5/27/20	FOR PERMIT

DRAWN BY: JLH
CHECKED BY: MWK/CML

MECHANICAL PLAN

SHEET NO.

M-2

PROJECT NO: 20139

GENERAL GAS LINE PIPING NOTES

1. THE GAS PIPING CONTRACTOR (GPC) SHALL PROVIDE ALL MATERIALS AND LABOR AS REQUIRED FOR A COMPLETE AND OPERATING SYSTEM AS DESCRIBED BY THESE PLANS AND SPECIFICATIONS.
2. THE GPC SHALL INSTALL ALL MATERIALS AND EQUIPMENT IN ACCORDANCE WITH THE 2018 NORTH CAROLINA FUEL GAS CODE AND ANY APPLICABLE LOCAL CODES. WHERE A CONFLICT EXISTS BETWEEN THE ABOVE REQUIREMENTS, THE MORE STRINGENT SHALL BE USED. THE CONTRACTOR SHALL OBTAIN CLARIFICATION FROM THE ENGINEER IN THE EVENT ANY PART OF THESE PLANS CONFLICTS WITH THE ABOVE REQUIREMENTS.
3. THE GPC SHALL OBTAIN AND PAY FOR ALL PERMITS, FEES, AND INSPECTIONS NECESSARY FOR THE COMPLETION OF THE WORK UNDER THIS CONTRACT.
4. DO NOT SCALE THESE DRAWINGS--REFER TO ARCHITECTURAL SHEETS FOR DIMENSIONS.
5. THE CONTRACTOR SHALL VISIT THE SITE PRIOR TO BIDDING TO BECOME FAMILIAR WITH EXISTING CONDITIONS. CONTRACTOR SHALL CONTACT THE ENGINEER TO RESOLVE ANY DISCREPANCIES BETWEEN EXISTING CONDITIONS AND THESE PLANS.
6. THE CONTRACTOR SHALL COORDINATE WITH OTHER TRADES PRIOR TO THE START OF CONSTRUCTION.
7. THE CONTRACTOR SHALL INSTALL HIGH PRESSURE REGULATORS AT EACH PIECE OF EQUIPMENT AS NECESSARY.
8. INSTALL A DRIP LEG IN GAS LINE AT EACH POINT WHERE CONDENSATE COULD COLLECT. ALL DRIP LEGS SHALL BE READILY ACCESSIBLE FOR CLEANING OR EMPTYING.
9. PIPING SHALL BE SCHEDULE 40 STEEL OR WROUGHT IRON AND COMPLY WITH ANSI/ASME B36.10, ASTM A 53, OR ASTM A 106.
10. ALL PIPES AND FITTINGS SHALL BE NEW, FREE OF DEFECTS, AND RATED FOR THE APPLICATION.
11. ALL PIPING SHALL BE INSTALLED SO AS NOT TO BE SUBJECT TO PHYSICAL DAMAGE.
12. PVC VENT PIPING SHALL NOT BE INSTALLED INDOORS.
13. THE TYPE OF PIPING JOINT USED SHALL BE SUITABLE FOR THE PRESSURE-TEMPERATURE CONDITIONS AND SHALL BE SELECTED CONSIDERING JOINT TIGHTNESS AND MECHANICAL STRENGTH UNDER THE SERVICE CONDITIONS.
14. PIPE JOINTS SHALL BE THREADED, FLANGED, BRAZED, OR WELDED.
15. FLEXIBILITY SHALL BE PROVIDED BY THE USE OF BENDS, LOOPS, OFFSETS, OR COUPLINGS OF THE SLIP TYPE. PROVISIONS SHALL BE MADE TO ABSORB THERMAL CHANGES BY THE USE OF EXPANSION JOINTS OF THE BELLOWS TYPE OR BY THE USE OF "BALL" OR "SWIVEL" JOINTS. DO NOT USE EXPANSION JOINTS OF THE SLIP TYPE INSIDE THE BUILDING. PIPE ALIGNMENT GUIDES SHALL BE USED WITH EXPANSION JOINTS PER THE MFG.
16. ALL GAS PIPING SHALL BE LABELED TO INDICATE THE PRESSURE.
17. PIPE HANGERS AND SUPPORTS SHALL CONFORM TO ANSI/MSS SP-58.
18. BENDS SHALL BE MADE ONLY WITH BENDING TOOLS AND PROCEDURES INTENDED FOR THAT PURPOSE. DO NOT BEND PIPE THROUGH AN ARC OF MORE THAN 90°. ALL BENDS SHALL BE SMOOTH AND FREE OF CRACKS, BUCKLING, OR OTHER EVIDENCE OF DAMAGE.
19. INSTALL GAS SHUTOFF VALVES UPSTREAM OF EACH GAS REGULATOR. VALVES SHALL BE READILY ACCESSIBLE AND NOT SUBJECT TO PHYSICAL DAMAGE.
20. WHERE A SEDIMENT TRAP IS NOT INCORPORATED AS PART OF THE APPLIANCE, A SEDIMENT TRAP SHALL BE INSTALLED DOWNSTREAM OF THE APPLIANCE SHUTOFF VALVE AS CLOSE TO THE INLET OF THE APPLIANCE AS PRACTICAL.
21. PRIOR TO ACCEPTANCE BY THE OWNER, ALL GAS PIPING INSTALLATIONS SHALL BE INSPECTED AND PRESSURE TESTED IN ACCORDANCE WITH SECTION 406 OF THE NC FUEL GAS CODE.

GAS LINE SIZING VERIFICATION TABLE				
PER 2018 NC FUEL GAS CODE TABLE 402.4 (27)				
SECTION	GAS LOAD	LINE SIZE	CAPACITY	PRESSURE
	MBTU/H	INCHES	CFH	PSI
001	3225	1 1/2	6410	2
002	3050	1 1/2	6410.0	2
003	175	3/4	1110	2
004	2875	1 1/2	6410.0	2
005	400	1	2080	2
006	2475	1 1/2	6410.0	2
007	2300	1 1/2	6410.0	2
008	175	3/4	1110	2
EQUIVALENT LENGTH: 200FT				

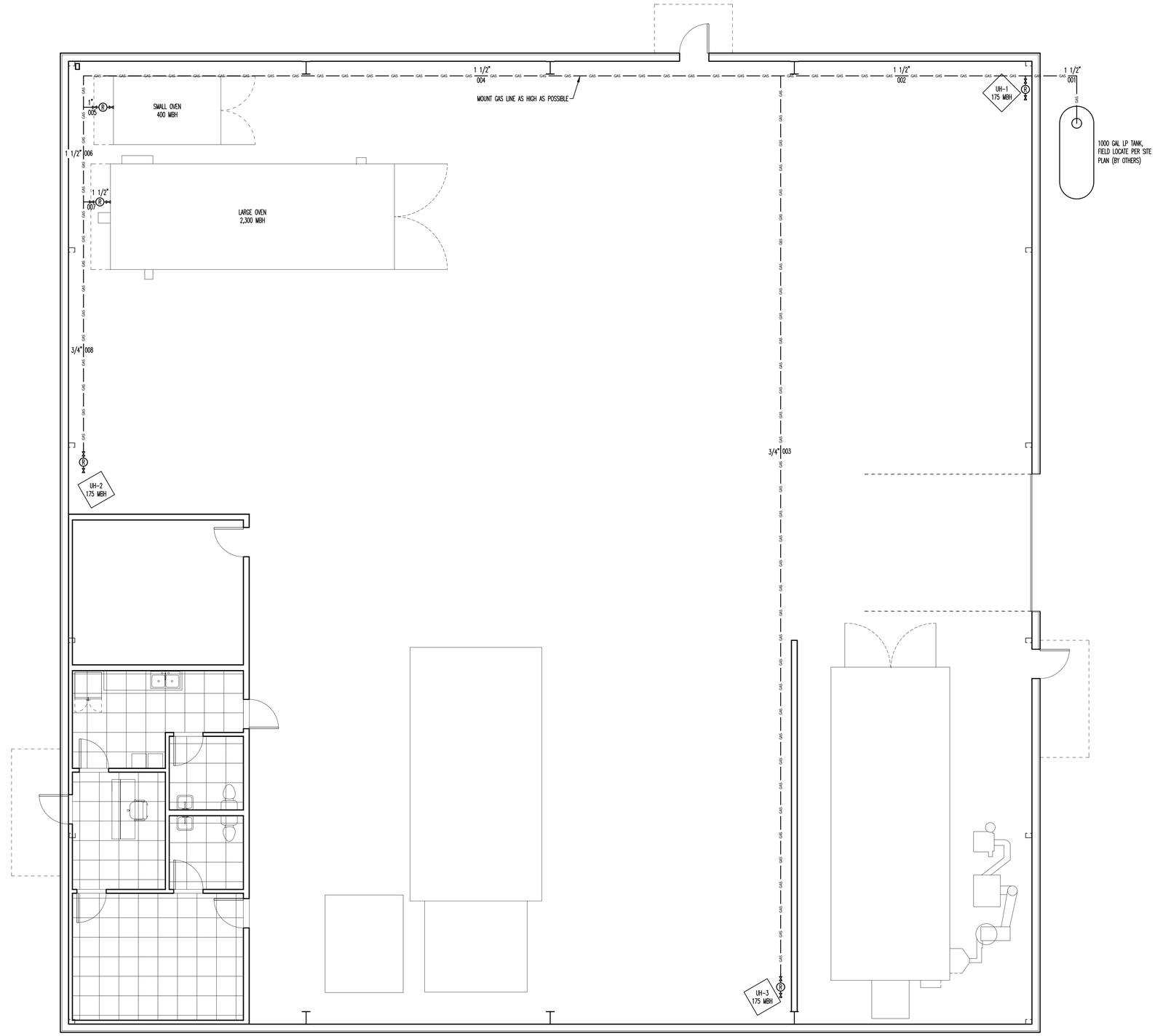

NO FIRE RATED ASSEMBLIES

LP GAS PLAN - SCALE: 1/4" = 1' | 1

Kilian Engineering Inc.
PO Box 3301, Henderson, NC 27536 | www.kilianengineering.com
(P) 252.438.8778 | CORPORATE LICENSE C-2277

NORTH CAROLINA PROFESSIONAL SEAL ENGINEER JACOB L HAMILTON 5-27-20
SEAL

KILIAN ENGINEERING CORPORATE SEAL NORTH CAROLINA
SEAL

NEW BUILDING FOR:
JC POWDERCOATING
FUQUAY-VARINA, NORTH CAROLINA

REVISION:

NO	DATE	DESCRIPTION

ISSUED:

NO	DATE	DESCRIPTION
1	5-27-20	FOR PERMIT

DRAWN BY: JLH
CHECKED BY: MWK/CML

LP GAS PLAN

SHEET NO.
M-3

PROJECT NO: 20139

GENERAL ELECTRICAL NOTES:

ADMINISTRATIVE:

1. THE FOLLOWING ABBREVIATIONS SHALL APPLY TO NOTES AND PLANS:
   PC – PLUMBING CONTRACTOR, EC – ELECTRICAL CONTRACTOR,
   MC – MECHANICAL CONTRACTOR, GC – GENERAL CONTRACTOR,
   FASC – FIRE ALARM SYSTEM CONTRACTOR.
2. "PROVIDE" MEANS TO FURNISH AND INSTALL. THE ELECTRICAL CONTRACTOR SHALL ALSO INSTALL MATERIALS AND EQUIPMENT FURNISHED BY OTHERS AND THE GENERAL CONTRACTOR AS REQUIRED.
3. EC SHALL PROVIDE LABOR, MATERIALS, EQUIPMENT, AND SERVICES NECESSARY AND REASONABLY INCIDENTAL TO INSURE A COMPLETE AND OPERATIONAL ELECTRICAL SYSTEM IN ACCORDANCE WITH THESE PLANS AND SPECIFICATIONS. MINOR ITEMS, ACCESSORIES, AND DEVICES REASONABLY INFERABLE AS NECESSARY FOR THE COMPLETION AND PROPER OPERATION OF ANY ELECTRICAL SYSTEM SHALL BE PROVIDED BY THE ELECTRICAL CONTRACTOR.
4. WORKMANSHIP SHALL BE IN ACCORDANCE WITH NECA 1 "STANDARD PRACTICE FOR GOOD WORKMANSHIP IN ELECTRICAL CONTRACTING."
5. ALL MATERIALS AND EQUIPMENT SHALL BE DELIVERED TO THE SITE AND UNLOADED BY THE ELECTRICAL CONTRACTOR AT AN APPROVED LOCATION. THE ELECTRICAL CONTRACTOR SHALL PROTECT ALL MATERIALS AND EQUIPMENT FROM BREAKAGE, THEFT, AND THE ELEMENTS. ALL MATERIALS AND EQUIPMENT SHALL REMAIN THE PROPERTY OF THE ELECTRICAL CONTRACTOR UNTIL THE PROJECT HAS BEEN COMPLETED AND TURNED OVER TO THE OWNER.
6. THE ELECTRICAL CONTRACTOR SHALL OBTAIN AND PAY FOR ALL PERMITS, FEES, AND INSPECTIONS NECESSARY FOR THE COMPLETION OF THE WORK UNDER THIS CONTRACT.
7. DO NOT SCALE THESE DRAWINGS–REFER TO ARCHITECTURAL SHEETS FOR DIMENSIONS.
8. TRADE NAMES AND MANUFACTURERS ARE SPECIFIED TO ESTABLISH A QUALITY STANDARD. SUBSTITUTIONS SHALL BE PERMITTED IF APPROVED BY THE ENGINEER PRIOR TO INSTALLATION. ALL LISTED MODEL NUMBERS SHALL BE VERIFIED WITH THE MANUFACTURER FOR PROPER APPLICATION OF EQUIPMENT.
9. THE ELECTRICAL CONTRACTOR SHALL VISIT THE SITE PRIOR TO BIDDING TO BECOME FAMILIAR WITH EXISTING CONDITIONS. THE ELECTRICAL CONTRACTOR SHALL CONTACT THE ENGINEER TO RESOLVE ANY DISCREPANCIES BETWEEN EXISTING CONDITIONS AND THESE PLANS. THE ELECTRICAL CONTRACTOR SHALL COORDINATE WITH OTHER TRADES PRIOR TO THE START OF CONSTRUCTION.
10. GROUNDING AND BONDING SHALL BE PER NEC ARTICLE 250. THE RACEWAY SYSTEM SHALL NOT BE RELIED UPON FOR GROUNDING CONTINUITY. A GREEN EQUIPMENT GROUNDING CONDUCTOR, SIZED PER NEC TABLE 250–122, SHALL BE RUN IN ALL POWER RACEWAYS. FOR NON–ISOLATED GROUND CIRCUITS PROVIDE ONE EQUIPMENT GROUNDING CONDUCTOR PER CONDUIT RUN. FOR ISOLATED GROUND CIRCUITS, PROVIDE ONE NEUTRAL AND ONE ISOLATED GROUND WIRE FOR EACH CIRCUIT; IN ADDITION, PROVIDE ONE EQUIPMENT GROUNDING CONDUCTOR PER CONDUIT RUN. MAIN BONDING JUMPERS AND SYSTEM BONDING JUMPERS SHALL BE INSTALLED IN ACCORDANCE WITH 250.28 OF THE NEC. FOR BUILDINGS OR STRUCTURES SUPPLIED BY FEEDERS OR BRANCH CIRCUITS, GROUNDING AND BONDING SHALL BE IN ACCORDANCE WITH 250.32. SEPARATELY DERIVED AC SYSTEMS SHALL BE GROUNDED IN ACCORDANCE WITH 250.30. RESISTANCE TO GROUND SHALL NOT EXCEED 25 OHMS; ADDITIONAL GROUNDING ELECTRODES SHALL BE INSTALLED PER 250.56 AS NECESSARY.
11. THE ELECTRICAL CONTRACTOR SHALL ALSO COORDINATE WITH THE GENERAL CONTRACTOR REGARDING THE BONDING OF THE FOOTING REBAR, SO THAT IT WILL BE IN PLACE AND READY AT TIME OF FOOTING INSPECTION.
12. ALL MATERIALS AND EQUIPMENT SHALL COMPLY WITH THE UNDERWRITERS' LABORATORIES, INC. STANDARDS OR HAVE UL APPROVAL, OR BEAR UL RE–EXAMINATION LISTING WHERE SUCH APPROVAL HAS BEEN ESTABLISHED FOR THE TYPE OF DEVICE IN QUESTION.
13. CONDUCTORS, FUSES, CIRCUIT BREAKERS, AND DISCONNECT SWITCHES SHOWN ON THESE PLANS HAVE BEEN SIZED FOR THE SPECIFIED EQUIPMENT. BEFORE ORDERING ELECTRICAL EQUIPMENT, THE ELECTRICAL CONTRACTOR SHALL COORDINATE WITH OTHER CONTRACTORS ON THE SITE AND NOTIFY THE ENGINEER OF ANY DISCREPANCIES SHOULD CONDUCTOR, CIRCUIT BREAKER, OR FUSE SIZES REQUIRE CHANGE.
14. THE ELECTRICAL CONTRACTOR SHALL COORDINATE WITH THE GENERAL CONTRACTOR TO ENSURE THE FOLLOWING MATERIALS ARE RECYCLED DURING THE CONSTRUCTION PHASE OF THE PROJECT: LIGHT FIXTURES, INCLUDING PROPER DISPOSAL OF BALLASTS, FLUORESCENT LIGHT BULBS, AND TRANSFORMERS, WIRING AND ELECTRICAL EQUIPMENT, AND INSULATION. WASTE MATERIALS CONTAINING LEAD, ASBESTOS, PCBs (FLUORESCENT LAMP BALLASTS), OR OTHER HARMFUL SUBSTANCES SHALL BE HANDLED AND DISPOSED OF IN ACCORDANCE WITH FEDERAL AND STATE LAWS AND REQUIREMENTS CONCERNING HAZARDOUS WASTE.
15. ALL WORK SHALL CONFORM TO 2017 NATIONAL ELECTRIC CODE, 2018 STATE BUILDING CODE, AND ALL APPLICABLE LOCAL CODES.

MATERIALS:

1. THE ELECTRICAL CONTRACTOR SHALL PROVIDE ALL NECESSARY DISCONNECTS, SWITCHES, RECEPTACLES, TERMINALS, ETC, UNDER THE ELECTRICAL BID AND SHALL INCLUDE ALL NECESSARY CIRCUITS AND CONNECTIONS TO THE EQUIPMENT PROVIDED BY ALL SUPPLIERS, UNLESS NOTED OTHERWISE BY OTHER DISCIPLINES.
2. ELECTRICAL CONTRACTOR SHALL PROVIDE ALL SERVICE ENTRANCE EQUIPMENT, SUB PANELS, AND OTHER ELECTRICAL DISTRIBUTION EQUIPMENT AS NECESSARY FOR A COMPLETE INSTALLATION. ELECTRICAL CONTRACTOR SHALL COORDINATE WITH UTILITY REGARDING SERVICE AND METERING DETAILS. PRIOR TO ORDERING EQUIPMENT, THE ELECTRICAL CONTRACTOR SHALL OBTAIN THE AVAILABLE FAULT CURRENT OR TRANSFORMER SIZE AND IMPEDANCE FROM THE UTILITY AND CONTACT THE ENGINEER IF THE VALUE EXCEEDS THE EQUIPMENT SPECIFIED. PANEL BOARDS AND SWITCH BOARDS SHALL BE SQUARE D, CUTLER–HAMMER, SIEMENS, OR GE. BUSES SHALL BE COPPER UNLESS OTHERWISE APPROVED BY THE ENGINEER. RECESSED PANEL BOARDS SHALL BE INSTALLED FLUSH WITH THE WALL FINISH. METER BASES SHALL COMPLY WITH THE UTILITY'S SPECIFICATIONS AND SHALL BE MOUNTED AT A HEIGHT APPROVED BY THE UTILITY. ALL EQUIPMENT IDENTIFIED FOR SERVICE ENTRANCE USE SHALL BE SO LABELED AND UL LISTED FOR SUCH USE. ELECTRICAL CONTRACTOR SHALL INSTALL ALL ELECTRICAL EQUIPMENT WITH CLEARANCES PER NEC 110.26. ELECTRICIAN SHALL PERMANENTLY LABEL EQUIPMENT PER NEC 110.24.
3. ENCLOSED SAFETY SWITCHES SHALL BE HEAVY DUTY TYPE BY SQUARE D, EATON, OR GE. ENCLOSED SWITCHES SHALL HAVE A HANDLE LOCKABLE IN THE OFF POSITION AND SHALL HAVE A HANDLE INTERLOCKED TO PREVENT OPENING THE FRONT COVER WHILE IN THE ON POSITION. ENCLOSED SWITCHES OF THE FUSIBLE TYPE SHALL BE FUSED IN ACCORDANCE WITH NAMEPLATE DATA WITH DUAL ELEMENT TYPE FUSES BY BUSSMAN, LITTELFUSE, OR MERSEN.
4. OCCUPANCY SENSORS SHALL BE BY WATTSTOPPER, LUTRON, LEVITON, SENSOR SWITCH, HUBBELL, OR APPROVED EQUAL.
5. CIRCUIT BREAKERS SHALL BE MOLDED–CASE, THERMAL MAGNETIC TYPE WITH QUICK–MAKE, QUICK–BREAK MECHANISM, COMMON TRIP ON MULTI–POLE BREAKERS, AND UL LISTED FOR BOTH COPPER AND ALUMINUM CONDUCTORS. CIRCUIT BREAKERS IN PANELS SHALL BE SERIES RATED WITH THE MAIN BREAKER, FULLY RATED FOR THE SYSTEM, OR SERIES RATED WITH THE BREAKER FEEDING THE PANEL FROM THE FACTORY.
6. ALL WIRE, CONNECTORS, TERMINALS, AND LUGS SHALL BE PROVIDED BY THE ELECTRICAL CONTRACTOR. WHERE CONDUCTORS ARE RUN IN PARALLEL, LUGS SHALL BE LISTED FOR PARALLEL CONDUCTORS. PUSH WIRE CONNECTORS ARE NOT ALLOWED FOR BUILDING WIRE. PUSH CONNECTORS ARE ONLY ALLOWED, WHEN APPROVED, AS PART OF MANUFACTURED LISTED PRODUCTS. ALL WIRE SHALL BE INSTALLED IN CONDUIT UNLESS SPECIFICALLY NOTED OTHERWISE.
7. THE INSULATION TYPE FOR INTERIOR WIRING SHALL BE DUAL RATED THHN/THWN OR XHHW; ALL WIRING INSTALLED BELOW GRADE OR IN MOIST OR WET LOCATIONS SHALL HAVE TYPE THWN OR XHHW INSULATION. INSULATION VOLTAGE RATING SHALL BE 600 VOLTS AND A MINIMUM TEMPERATURE RATING OF 75°C. CONDUCTORS SHALL BE SOLID OR STRANDED COPPER FOR #10 AWG AND #12 AWG, AND STRANDED COPPER FOR #8 AWG AND LARGER SIZES. ALL WIRING AND CABLE SHALL BE UL LISTED. ALL TERMINATIONS AND DEVICES SHALL BE RATED FOR USE WITH 75°C CONDUCTORS. FINAL CONNECTIONS TO ALL MOTORS AND EQUIPMENT SUBJECT TO VIBRATION OR MOVEMENT SHALL BE MADE WITH STRANDED COPPER CONDUCTORS. CONDUCTORS SHALL BE BY CERRO WIRE, INC, INDUSTRIAL WIRE & CABLE, INC, OR SOUTHWIRE COMPANY.
8. JOINTS IN SOLID CONDUCTORS SHALL BE SPLICED USING IDEAL "WIRE NUTS", 3M "SCOTCH LOCK", OR T&B "PIGGY" CONNECTORS IN JUNCTION BOXES, OUTLET BOXES, AND LIGHTING FIXTURES. JOINTS IN STRANDED CONDUCTORS SHALL BE SPLICED BY APPROVED MECHANICAL CONNECTORS AND GUM RUBBER TAPE OR FRICTION TAPE. SOLDERLESS MECHANICAL CONNECTORS FOR SPLICES AND TAPS, PROVIDED WITH UL APPROVED INSULATING COVERS, MAY BE USED INSTEAD OF MECHANICAL CONNECTORS PLUS TAPE. IN ALL CASES, CONDUCTORS SHALL BE CONTINUOUS FROM OUTLET TO OUTLET AND NO SPLICING SHALL BE MADE EXCEPT WITHIN OUTLET OR JUNCTION BOXES, TROUGHS, OR GUTTERS. WHERE CONCENTRIC, ECCENTRIC, OR OVERSIZED KNOCKOUTS ARE ENCOUNTERED, A GROUNDING TYPE INSULATED BUSHING SHALL BE PROVIDED.
9. ALL LUMINAIRES SHALL BE LISTED. LUMINAIRES IN WET OR DAMP LOCATIONS SHALL BE MARKED AS SUITABLE FOR THE RESPECTIVE USE. EMERGENCY LIGHTING SHALL BE INSTALLED AS SHOWN. FINAL LOCATIONS OF ALL EXIT AND EMERGENCY LIGHTS SHALL BE VERIFIED WITH THE BUILDING INSPECTOR PRIOR TO INSTALLATION. ALL FLUORESCENT FIXTURES SHALL HAVE ELECTRONIC BALLASTS MEETING ANSI C82.11 FOR ELECTRONIC BALLAST PERFORMANCE. ALL BALLASTS SHALL BE UL LISTED AND MEET FEDERAL AND STATE EFFICIENCY REQUIREMENTS.
10. ALL CONDUIT, FITTINGS, COUPLINGS, AND SUPPORTS SHALL BE PROVIDED BY THE ELECTRICAL CONTRACTOR. CONDUIT FITTINGS AND COUPLINGS SHALL BE BY APPLETON, RACO, OR O–Z/GEDNEY. COUPLINGS SHALL BE THREADED, SET–SCREW, OR COMPRESSION TYPE. INDENTER OR CRIMP TYPE ARE NOT PERMITTED. CONDUIT FITTINGS AT ALL ELECTRICAL BOXES INCLUDING PULL, JUNCTION, AND OUTLET BOXES, SHALL HAVE INSULATED THROATS TO PREVENT INSULATION SCORING. DIE CAST FITTINGS ARE NOT PERMITTED
11. EMT SHALL BE MANUFACTURED IN ACCORDANCE WITH AMERICAN NATIONAL STANDARDS INSTITUTE–AMERICAN NATIONAL STANDARD FOR STEEL ELECTRICAL METALLIC TUBING (EMT), ANSI C80.3 AND UL 797. RIGID METAL CONDUIT SHALL BE MANUFACTURED IN ACCORDANCE WITH ANSI–AMERICAN NATIONAL STANDARD FOR ELECTRICAL RIGID STEEL CONDUIT (ERSC), ANSI C80.1 AND UL 6. INTERMEDIATE METAL CONDUIT SHALL BE MANUFACTURED IN ACCORDANCE WITH ANSI–AMERICAN NATIONAL STANDARD FOR INTERMEDIATE METAL CONDUIT ANSI C80.6 AND UL 1242.
12. METAL CONDUIT SHALL BE BY ALLIED TUBING & CONDUIT, BECK MANUFACTURING, INC, OR WHEATLAND TUBE COMPANY. FLEXIBLE METAL CONDUIT, LIQUID–TIGHT FLEXIBLE METAL CONDUIT, AND NONMETALLIC CONDUIT SHALL BE BY AFC CABLE SYSTEMS, INC, ELECTRI–FLEX COMPANY, OR INTERNATIONAL METAL HOSE.

METHODS:

1. EC SHALL REVIEW THE MECHANICAL PLANS TO ESTABLISH POINTS OF CONNECTION AND THE EXTENT OF THE ELECTRICAL WORK TO BE PROVIDED IN THE CONTRACT.
2. ALL CIRCUIT BREAKERS FEEDING HVAC EQUIPMENT SHALL BE HACR BREAKERS. ALL BRANCH CIRCUIT CONDUCTORS SHALL BE MINIMUM #12 AWG IN 3/4 in CONDUIT. EACH MULTI–WIRE BRANCH CIRCUIT SHALL BE PROVIDED WITH A MEANS TO SIMULTANEOUSLY DISCONNECT ALL UNGROUNDED CONDUCTORS AT THE SOURCE PER NEC 210.4(B). GROUP ALL CONDUCTORS OF EACH MULTI–WIRE BRANCH CIRCUIT PER 210.4(D) WITH WIRE TIES OR SIMILAR MEANS. DO NOT EXCEED THREE HOMERUNS PER CONDUIT. DO NOT INSTALL ISOLATED GROUND AND NON–ISOLATED GROUND CIRCUITS IN THE SAME CONDUIT. INSTALL CONDUCTORS OF DIFFERENT VOLTAGES IN SEPARATE CONDUITS.
3. COLOR CODE CONDUCTORS PER NEC. FEEDERS SHALL BE IDENTIFIED IN ACCORDANCE WITH NEC 215.12. USE BLACK AND RED FOR PHASES A AND B RESPECTIVELY ON 120/240 VOLT SINGLE–PHASE SYSTEMS AND WHITE FOR THE NEUTRAL. COLORS SHALL BE FACTORY APPLIED FOR CONDUCTORS #6 AWG AND SMALLER. ALL EQUIPMENT GROUNDING CONDUCTORS SHALL BE GREEN IN COLOR AND MINIMUM #12 AWG. THE EC SHALL PROVIDE PLENUM RATED CABLE FOR ANY ELECTRICAL, TELEPHONE, COMMUNICATION, OR OTHER CABLE THAT ENTERS CEILING RETURN PLENUMS.
4. ALL LIGHT FIXTURES SHALL BE SUPPORTED INDEPENDENTLY OF THE SUSPENDED CEILING. COORDINATE LIGHTING LAYOUT WITH CEILING GRID, MECHANICAL EQUIPMENT, DUCTWORK AND SPRINKLER HEADS AS NECESSARY. SEE REFLECTED CEILING PLAN FOR DETAILS. FLUORESCENT FIXTURES UTILIZING DOUBLE–ENDED LAMPS MUST HAVE A DISCONNECTING MEANS COMPLYING WITH NEC 410.130(G).
5. MOUNT LIGHT SWITCHES AT 48 in AFF. MULTIPLE SWITCHES AT SAME LOCATION SHALL BE UNDER ONE WALL PLATE. VERIFY WALL PLATE COLOR AND MATERIAL WITH THE ARCHITECT/OWNER. INSTALL SWITCHES WITH off POSITION DOWN. ALL SWITCHES SHALL BE HEAVY DUTY, IVORY PLASTIC WITH TOGGLE HANDLE, RATED 120–277V AC, AND COMPLYING WITH NEMA WD 6 AND WD 1. SWITCHES SHALL BE BY COOPER WIRING DEVICES, LEVITON MANUFACTURING, PASS & SEYMOUR, OR HUBBELL. PROVIDE BOX DEVICE PARTITION/DIVIDERS FOR MULTI–GANG BOXES FOR COMPLIANCE WITH NEC 404.8(B).
6. ELECTRICAL CONTRACTOR SHALL PROVIDE FIRE–STOPPING AT ALL ELECTRICAL PENETRATIONS OF RATED FLOORS AND WALLS TO PRESERVE OR RESTORE THE FIRE–RESISTANCE RATING. SEAL PENETRATIONS USING A UL LISTED SYSTEM FOUND IN THE UL DIRECTORY SPECIFIC TO THE UL LISTING OF THE ASSEMBLY BEING PENETRATED. SEE ARCHITECTURAL PLANS FOR UL RATED ASSEMBLIES SPECIFIC TO THIS PROJECT.
7. ELECTRICAL CONTRACTOR SHALL PROVIDE GFCI RECEPTACLES IN KITCHENS, RESTROOMS, OUTDOORS, AND IN SHOP AREAS AS REQUIRED BY NEC. REFRIGERATORS AND WATER COOLERS MUST HAVE A DEDICATED GFCI BREAKER. EACH OUTDOOR HVAC UNIT MUST HAVE A GFCI RECEPTACLE WITHIN 25 FEET FOR SERVICING. GFCI RECEPTACLES SHALL CONFORM TO UL 943 CLASS A AND UL 498 STANDARDS. RECEPTACLES SHALL BE BY COOPER WIRING DEVICES, LEVITON MANUFACTURING, PASS & SEYMOUR, OR HUBBELL. ALL RECEPTACLES SHALL BE 125V RATED, HEAVY DUTY, AND COMPLY WITH NEMA WD 6 AND WD 1.
8. LOCATIONS AND HEIGHTS OF ALL WALL–MOUNTED DEVICES SHALL BE COORDINATED WITH THE ARCHITECT PRIOR TO INSTALLATION.
9. CONCEAL ALL CONDUIT EXCEPT IN MECHANICAL ROOMS OR UNFINISHED AREAS AS NOTED. USE EMT CONDUIT FOR ALL BRANCH CIRCUITS AND FEEDERS INSIDE THE BUILDING. TYPE MC CABLE AND TYPE AC CABLE MAY BE INSTALLED WITHIN WALLS IF ALL NEUTRAL WIRES, ISOLATED GROUND WIRES, AND EQUIPMENT GROUND WIRES AS LISTED ABOVE ARE CONTAINED IN THE CABLE. FLEXIBLE CONNECTIONS TO MOTORS AND OTHER EQUIPMENT SHALL BE MADE USING WEATHERPROOF FLEXIBLE CONDUIT. FOR LAY–IN LIGHT FIXTURES, USE MAXIMUM OF SIX (6) FEET OF FLEXIBLE MC CABLE (OR THE FLEXIBLE CONDUIT PROVIDED BY THE FIXTURE MANUFACTURER). SCHEDULE 40 PVC CONDUIT MAY BE USED FOR THE SECONDARY UNDERGROUND SERVICE, UNDERGROUND TELEPHONE SERVICE, AND BRANCH AND FEEDER CIRCUITS UNDER SLAB OR EXTERIOR TO THE BUILDING. EXPOSED EXTERIOR CONDUIT SHALL BE SCHEDULE 80 PVC. ALL UNDERGROUND RACEWAYS SHALL BE IDENTIFIED WITH UNDERGROUND LINE MARKING TAPE 6–8 in BELOW GRADE DIRECTLY ABOVE THE RACEWAY. PROVIDE PULL WIRE IN EMPTY CONDUITS. UPSIZE CONDUIT FROM MINIMUM SIZE AS NECESSARY FOR LONGER PULLS. UNDERGROUND RACEWAYS THAT STUB INTO THE BOTTOM OF SWITCHBOARDS, OUTDOOR TRANSFORMERS, GENERATORS, ETC., SHALL RISE AT LEAST 2 in ABOVE THE FINISHED SLAB TO PREVENT WATER FROM DRAINING INTO THE RACEWAYS. RACEWAYS THAT PENETRATE EXTERIOR WALLS OR INTERIOR PARTITIONS SEPARATING SPACES THAT WILL BE AT SIGNIFICANTLY DIFFERENT TEMPERATURES SHALL BE SEALED IN ACCORDANCE WITH 300.5(G), 300.7(A), AND 300.50(E) OF THE NEC. ROUTE CONDUIT IN AND UNDER SLAB FROM POINT–TO–POINT. ROUTE EXPOSED CONDUIT AND CONDUIT INSTALLED ABOVE ACCESSIBLE CEILINGS PARALLEL AND PERPENDICULAR TO WALLS. COMPLETELY AND THOROUGHLY SWAB ALL RACEWAYS BEFORE INSTALLING WIRE. PULL ALL CONDUCTORS INTO EACH RACEWAY AT ONE TIME. USE A SUITABLE WIRE PULLING LUBRICANT FOR BUILDING WIRE #4 AWG AND LARGER.
10. CABLES, RACEWAYS, OR BOXES, INSTALLED IN EXPOSED OR CONCEALED LOCATIONS UNDER METAL–CORRUGATED SHEET ROOF DECKING, SHALL BE INSTALLED AND SUPPORTED SO THERE IS NOT LESS THAN 1–1/2 in MEASURED FROM THE LOWEST SURFACE OF THE ROOF DECKING TO THE TOP OF THE CABLE, RACEWAY, OR BOX. A CABLE, RACEWAY, OR BOX SHALL NOT BE INSTALLED IN CONCEALED LOCATIONS IN METAL–CORRUGATED, SHEET DECKING–TYPE ROOF. SEE NEC 300.4(E).
11. THE ELECTRICAL CONTRACTOR SHALL PROVIDE ALL OUTLET, JUNCTION, PULL BOXES, FITTINGS, AND SUPPORTS. ALL OUTLET AND JUNCTION BOXES SHALL BE GALVANIZED STEEL TYPE BY APPLETON, STEEL CITY, OR RACO. EXTERIOR BOXES SHALL BE TYPE FS. VAPORTITE BOXES SHALL BE TYPE GS. WHERE SURFACE MOUNTED BOXES ARE USED, THOSE BOXES AND THEIR FACEPLATES SHALL HAVE ROUNDED CORNERS. BOXES INSTALLED IN FLOORS SHALL BE RATED FOR THE APPLICATION. MOUNT JUNCTION AND OUTLET BOXES FLUSH WITH FINISH SURFACES UNLESS OTHERWISE NOTED. WHERE MOUNTING HEIGHTS ARE GIVEN, THEY SHALL BE MEASURED FROM THE FINISHED FLOOR TO THE CENTER OF THE BOX. ALL BOXES SHALL BE SIZED PER NEC ARTICLE 314. ALL OUTLET AND JUNCTION BOXES SHALL HAVE A COVER PLATE, PROVIDED BY THE ELECTRICAL CONTRACTOR. OUTLET BOXES IN RATED WALLS SHALL BE INSTALLED IN ACCORDANCE WITH NORTH CAROLINA BUILDING CODE 712.3.2 (MAXIMUM BOX SIZE IS 16 SQUARE in AND MAXIMUM OF SIX (6) BOXES PER 100 SQUARE FEET). INSTALL OUTLET BOXES IN RATED WALLS SUCH THAT OPENINGS OCCUR IN ONE SIDE ONLY WITHIN ANY GIVEN STUD SPACE. ALL CLEARANCES BETWEEN THE OUTLET BOX AND THE GYPSUM BOARD SHALL BE FILLED WITH JOINT COMPOUND OR OTHER APPROVED FIRE STOP MATERIAL. FLUSH MOUNTED JUNCTION BOXES IN ADJACENT ROOMS SHALL NOT BE MOUNTED BACK–TO–BACK. SURFACE MOUNTED FIXTURES SHALL BE FED THROUGH FLUSH MOUNTED 4X4 OCTAGONAL OR SQUARE BOXES.
12. ALL CONDUIT, BOXES, AND ELECTRICAL EQUIPMENT SHALL BE FIRMLY AND SECURELY FASTENED TO OR SUPPORTED FROM THE BUILDING STRUCTURAL MEMBERS OR EMBEDDED IN CONCRETE OR MASONRY. ELECTRICAL SUPPORTS SHALL NOT BE ATTACHED TO DUCTWORK, PIPING, OR THEIR SUPPORTS. HANGERS SHALL BE CATALOG ITEMS COMPATIBLE WITH AND SUITABLE FOR THE INTENDED USE. FOR METAL ROOF DECK INSTALLATIONS, 1 in EMT CONDUIT MAXIMUM AND 4 in JUNCTION BOXES MAXIMUM MAY BE SUPPORTED BY DECKING. THE SUSPENDED CEILING SYSTEM SHALL NOT BE USED FOR THE SUPPORT OF ELECTRICAL RACEWAY SYSTEMS OR SUPPORT OF COMMUNICATIONS OR DATA SYSTEMS WIRING. CONTRACTOR SHALL COMPLY WITH 1613 OF THE NORTH CAROLINA GENERAL CONSTRUCTION BUILDING CODE.
13. WHERE CONDUCTORS ARE RUN IN PARALLEL, THE EC SHALL COMPLY WITH NEC 310.4.
14. ALL TELEPHONE AND COMMUNICATIONS OUTLETS AND RACEWAYS ARE ROUGH–INS ONLY. EACH TELEPHONE AND COMMUNICATIONS OUTLET SHALL BE A 4 in SQUARE BY 2–1/8 in DEEP BOX WITH 3/4 in KNOCK–OUTS AND A 3/4 in CONDUIT STUBBED FROM THE OUTLET BOX TO ABOVE THE CEILING. PROVIDE A NON–METALLIC INSULATING BUSHING ON ALL CONDUITS STUBBED ABOVE THE CEILING. PROVIDE A BLANK COVER PLATE ON ALL OUTLET BOXES.
15. ELECTRICAL CONTRACTOR SHALL INSTALL DISCONNECT SWITCHES IN SIGHT OF ALL HARDWIRED EQUIPMENT AND APPLIANCES OR PROVIDE BREAKERS CAPABLE OF BEING LOCKED IN THE OPEN POSITION PER NEC 422.31. FOR MOTOR DRIVEN APPLIANCES, PROVIDE A DISCONNECTING MEANS PER NEC 422.31 AND 430 PART IX. WHERE AN INDIVIDUAL DISCONNECT SWITCH, CIRCUIT BREAKER, STARTER, ETC, IS SHOWN ON THE PLANS ADJACENT TO ITS LOAD AND NOT LOCATED ON A WALL, PROVIDE NECESSARY MATERIALS AND LABOR TO SUPPORT THE DEVICE.
16. ELECTRICAL CONTRACTOR SHALL FIELD IDENTIFY ALL SWITCH BOARD, PANEL BOARDS, CONTROL PANELS, METER SOCKETS, ETC., TO WARN QUALIFIED PERSONS OF POTENTIAL ELECTRICAL ARC FLASH HAZARDS PER 110.16 OF NEC.
17. ELECTRICAL CONTRACTOR SHALL PROVIDE NAMEPLATES FOR IDENTIFICATION OF ALL EQUIPMENT, SWITCHES, PANELS, ETC. THE NAMEPLATES SHALL BE LAMINATED PHENOLIC PLASTIC, BLACK FRONT, AND BACK WITH WHITE CORE, WHITE ENGRAVED LETTERS (1/4 in MINIMUM) ETCHED INTO THE WHITE CORE. ELECTRICAL CONTRACTOR SHALL PROVIDE A TYPE WRITTEN DIRECTORY CARD THAT ACCURATELY IDENTIFIES CIRCUITS INSIDE EACH PANEL. HANDWRITTEN LABELS ARE NOT ACCEPTABLE.

ELECTRICAL NOTES | 1

PANEL A

CKT	LOAD	BKR	LOAD kVA	PH	LOAD kVA	BKR	LOAD	CKT
1	AIR COMPRESSOR (60HP)	$100/3_1$	19.94	A	21.40	100/3	PANEL B VIA 75 KVA XFER	2
3			19.94	B	20.90			4
5			19.94	C	17.70			6
7	SAND BLASTER	$60/3_1$	9.00	A	1.18	20/1	WORKSHOP LIGHTS (a)	8
9			9.00	B	1.18	20/1	WORKSHOP LIGHTS (b)	10
11			9.00	C	0.82	20/1	WORKSHOP LIGHTS (c)	12
13	EF-3 (ON ROOF)	20/3	2.11	A	0.74	20/1	OFFICE/STORAGE ROOM LIGHTS	14
15			2.11	B	0.00	20/1	SPARE	16
17			2.11	C	0.00	20/1	SPARE	18
19	SPACE	--	0.00	A	0.00	--	SPACE	20
21	SPACE	--	0.00	B	0.00	--	SPACE	22
23	SPACE	--	0.00	C	0.00	--	SPACE	24
25	SPACE	--	0.00	A	0.00	--	SPACE	26
27	SPACE	--	0.00	B	0.00	--	SPACE	28
29	SPACE	--	0.00	C	0.00	--	SPACE	30
31	SPACE	--	0.00	A	0.00	--	SPACE	32
33	SPACE	--	0.00	B	0.00	--	SPACE	34
35	SPACE	--	0.00	C	0.00	--	SPACE	36
37	SPACE	--	0.00	A	0.00	--	SPACE	38
39	SPACE	--	0.00	B	0.00	--	SPACE	40
41	SPACE	--	0.00	C	0.00	--	SPACE	42
			kVA	PH	AMPS			
			54.4	A	196			
			53.1	B	192			
			49.6	C	179			

VOLTAGE/PHASE	277/480Y, 3P, 4W
BUS RATING	400A
MAIN CIRCUIT BREAKER RATING	300A MB
AIC RATING	22K
SERVICE ENTRANCE RATED	YES
ENCLOSURE	NEMA 1
MOUNTING	SURFACE

1. VERIFY BREAKER SIZE WITH EQUIPMENT MANUFACTURER

PANEL B

CKT	LOAD	BKR	LOAD kVA	PH	LOAD kVA	BKR	LOAD	CKT
1	LARGE SPRAY BOOTH	$30/3_1$	2.28	A	1.20	$20/2_1$	LARGE OVEN	2
3			2.28	B	1.20			4
5			2.28	C	1.20	$20/2_1$	SMALL OVEN	6
7	SMALL SPRAY BOOTH	$30/3_1$	2.28	A	1.20			8
9			2.28	B	1.15	20/1	LARGE OVEN LIGHTS	10
11			2.28	C	0.51	20/1	SMALL OVEN LIGHS	12
13	LARGE SPRAY BOOTH LIGHTS	20/1	1.15	A	1.44	25/2	HP-1	14
15	SMALL SPRAY BOOTH LIGHTS	20/1	0.51	B	1.44			16
17	OFFICE RECP	20/1	0.90	C	2.64	25/2	AHU-1	18
19	LOBBY RECP	20/1	0.72	A	2.64			20
21	RESTROOM RECP	20/1	0.54	B	1.32	15/2	MS-1	22
23	BREAKROOM RECP 1	20/1	0.36	C	1.32			24
25	BREAKROOM RECP 2	20/1	0.36	A	1.70	20/1	UH-1	26
[27]	BREAKROOM FRIDGE	20/1	0.18	B	1.70	20/1	UH-2	28
[29]	BREAKROOM DRINKING FOUNTAIN	20/1	0.36	C	1.70	20/1	UH-3	30
31	HOSE REELS	20/1	0.36	A	5.00	50/2	ELEC. OVEN	32
33	WORKSHOP RECPS 1	20/1	0.90	B	5.00			34
35	MINI SANDBLASTING CABINET	20/1	1.20	C	0.00	20/1	SPARE	36
37	WORKSHOP RECPS 3	20/1	1.08	A	0.00	20/1	SPARE	38
39	GARAGE DOOR	20/1	0.18	B	2.25	30/2	WH-1	40
41	EXTERIOR RECPS	20/1	0.72	C	2.25			42
			kVA	PH	AMPS			
			21.4	A	178			
			20.9	B	174			
			17.7	C	148			

VOLTAGE/PHASE	208Y/120V, 3P, 4W
BUS RATING	225A
MAIN CIRCUIT BREAKER RATING	225A MAIN
AIC RATING	22K
SERVICE ENTRANCE RATED	NO
ENCLOSURE	NEMA 1
MOUNTING	SURFACE

1. VERIFY BREAKER SIZE WITH EQUIPMENT MANUFACTURER

☐ GFCI BREAKER

PANEL SCHEDULE | 2

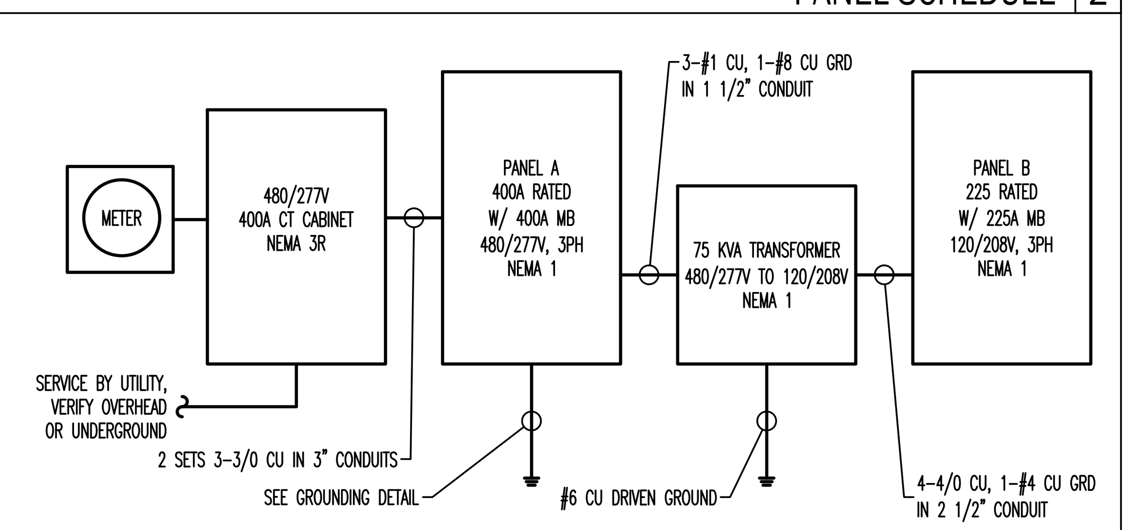

POWER RISER - NO SCALE | 3

LIGHT FIXTURE SCHEDULE

MARK	DESCRIPTION	LOUVER/LENS	CCT	VOLTAGE	INPUT WATTAGE	MOUNTING	REMARKS	MFG	MODEL
A	2X4 LED TROFFER	0.125" ACRYLIC	3500K	277	54.8	LAY-IN	2	LITHONIA	2GTL-4-60L-EZ1-LP835-MVOLT
B	LED HIGH BAY	0.125" ACRYLIC	4000K	277	136	SUSPENDED	2	LITHONIA	JEBL-18000LM-PFL-MVOLT-40K-80CRI
C	LED WALL PACK	GLASS	4000K	277	39	SURFACE	2	LITHONIA	TWH LED-10C-1000-40K-T3M-MVOLT
OE	EXTERIOR OVAL LED EMERGENCY LIGHT	POLYCARBONATE	-	277	2	SURFACE	1,2	EELP	OEM-EM
EX	LED EXIT SIGN W/ BATTERY BACKUP	ACRYLIC	N/A	277	1	VARIES	1,2	LITHONIA	LQM-S-W-1-R-120/277-EL-N-SD
EXH	LED EXIT/COMBO W/ BATTERY BACKUP	ACRYLIC	N/A	277	3	VARIES	1,2	LITHONIA	LHQM-S-W-1-R-120/277-N-SD
EM	DUAL HEAD EMERGENCY FIXTURE	ACRYLIC	N/A	277	2	VARIES	1,2	LITHONIA	ELM2-SD

1. FIXTURE SHALL HAVE BATTERY BACKUP FOR 90 MINUTE ILLUMINATION.
2. OR EQUAL BY COOPER, PHILIPS OR DAY–BRITE LIGHTING

ELECTRICAL DESIGNER'S STATEMENT

ELECTRICAL SYSTEM AND EQUIPMENT METHOD OF COMPLIANCE
PRESCRIPTIVE _X_ PERFORMANCE ___ ENERGY COST BUDGET ___

LIGHTING SCHEDULE:

LAMP TYPE REQUIRED IN FIXTURE:	SEE LIGHTING LEGEND		
NUMBER OF LAMPS PER FIXTURE:	SEE LIGHTING LEGEND		
BALLAST TYPE USED IN FIXTURE:	SEE LIGHTING LEGEND		
NUMBER OF BALLASTS IN FIXTURE:	SEE LIGHTING LEGEND		
TOTAL WATTAGE PER FIXTURE:	SEE LIGHTING LEGEND		
TOTAL INTERIOR WATTAGE SPECIFIED VS ALLOWED:		WATTS SPECIFIED	WATTS ALLOWED
		3867.00	11286.10

OCCUPANCY	AREA (sf)	ALLOWANCE (W/sf)	WATTAGE ALLOWED
OFFICE	630	0.82	516.60
WORKSHOP	9050	1.19	10769.50
TOTAL	630		11286.10

EQUIPMENT SCHEDULES WITH MOTORS (NOT USED FOR MECHANICAL SYSTEMS)
MOTOR HORSEPOWER: N/A
NUMBER OF PHASES: N/A
MINIMUM EFFICIENCY: N/A
MOTOR TYPE: N/A
NUMBER OF POLES: N/A

DESIGNER STATEMENT: TO THE BEST OF MY KNOWLEDGE AND BELIEF, THE DESIGN OF THIS BUILDING COMPLIES WITH THE 2018 NORTH CAROLINA ENERGY CONSERVATION CODE.

FOR THE ADDITIONAL PRESCRIPTIVE REQUIREMENT REQUIRED BY C406 OF 2018 NORTH CAROLINA ENERGY CONSERVATION CODE, WE ARE CHOOSING C406.3 – REDUCED LIGHTING POWER DENSITY.

3867 W SPECIFIED <= 10157 W (11286 W ALLOWED X 90%)

LIGHTING DEVICE LEGEND

SYMBOL	DESCRIPTION	REMARKS
$	SINGLE POLE WALL SWITCH	HEAVY DUTY, AC ONLY, COMMERCIAL GRADE GENERAL USE SNAP SWITCH COMPLYING WITH NEMA WD 6 AND WD 1. IVORY PLASTIC BODY WITH TOGGLE HANDLE. 120-277V, 20A. MEET FEDERAL SPECIFICATION W-S-896.
$_M	WALL MOUNTED OCCUPANCY SENSOR	WATTSTOPPER DW-100 LINE VOLTAGE OCCUPANCY SENSOR. ULTRA SONIC AND INFRARED.
$_LV	LOW VOLTAGE SWITCH	WATTSOPPER LVS-1 LOW VOLTAGE MOMENTARY CONTROL SWITCH.
$_3	3 WAY SWITCH	3-WAY TYPE SWITCH WITH SAME CHARACTERISTICS AS SINGLE POLE SWITCH ABOVE.
(DT)	CEILING OCCUPANCY SENSOR	WATTSTOPPER, DT-300 LOW VOLTAGE OCCUPANCY SENSOR. 360° ULTRA SONIC AND INFRARED.
(SP)	SWITCHING PHOTOSENSOR	WATTSTOPPER, LS-102, CONSULT OWNER FOR FOOT-CANDLE SET POINT.
(P)	POWER PACK	WATTSTOPPER, BZ-150 LOW VOLTAGE POWER PACK FOR CEILING PACK SENSORS.
(J)	JUNCTION BOX	GALVANIZED METAL BOX CONSTRUCTED IN ACCORDANCE WITH 314.40 OF THE NEC.
⊠	EXHAUST FAN	VENT FAN, 120V, CFM AS NOTED MC TO PROVIDE AND VENT, EC TO WIRE.

POWER DEVICE LEGEND

SYMBOL	DESCRIPTION	REMARKS
▶	DATA AND TELEPHONE JACK	PHONE/DATA OUTLET. EC TO INSTALL 3/4"C WITH PULL-STRING FROM OUTLET BOX TO ABOVE CEILING FOR FUTURE USE. JACKS AND COMMUNICATION CABLING BY OTHERS.
⊖	DUPLEX RECEPTACLE	NEMA 5-20R, HEAVY DUTY, COMMERCIAL GRADE, 125V, 20A COMPLYING WITH NEMA WD 6 AND WD 1. GFCI OR AFCI IF NOTED. 'WP' DENOTES WEATHERPROOF COVER. 'CH' DENOTES COUNTER HEIGHT. LISTED TAMPERPROOF IF NOTED. MEET FEDERAL SPECIFICATION W-C-596.
⦶	DUPLEX FLOOR RECEPTACLE	DUPLEX RECEPTACLE OF SAME CHARACTERISTICS AS ABOVE WITH BRASS COVER. MOUNT IN FLOOR. ALL FLOOR BOXES MUST BE LISTED FOR FLOOR APPLICATION.
⧄ F	FUSIBLE DISCONNECT SWITCH	HEAVY DUTY TYPE. TYPE 1 ENCLOSURE IN INTERIOR APPLICATIONS, TYPE 3R ENCLOSURE IN EXTERIOR APPLICATIONS, FUSE ACCORDING TO NAMEPLATE DATA.
☐ F	DISCONNECT SWITCH	HEAVY DUTY TYPE. TYPE 1 ENCLOSURE IN INTERIOR APPLICATIONS, TYPE 3R ENCLOSURE IN EXTERIOR APPLICATIONS.
(J)	JUNCTION BOX	GALVANIZED METAL BOX CONSTRUCTED IN ACCORDANCE WITH 314.40 OF THE NEC.

NEC ELECTRIC DEMAND SUMMARY 480Y/277V, 3P, 4W

EQUIPMENT	DEMAND FACTOR	kVA A	kVA B	kVA C	LOAD kVA	NEC REFERENCE	NOTES/CALCULATIONS
LIGHTING	125%	4.17	4.17	4.17	12.50	220.12	10000 SF X 1 VA/SF X 1.25
RECEPTACLES < 10 kVA	100%	2.52	1.80	2.34	6.66	220.44	
HVAC	100%	7.89	6.56	7.77	22.22	--	BASED ON MCA
WATER HEATER	125%	0.00	2.81	2.81	5.63	422.13	STORAGE TANK <120 GAL @ 125%
SHOP EQUIPMENT	100%	42.05	41.36	35.21	118.62	--	BASED ON MCA
DEMAND kVA PER PHASE		56.63	56.70	52.30			
DEMAND AMPS PER PHASE		204	205	189			

THE CALCULATED LIGHTING LOAD EXCEEDS THE CONNECTED LIGHTING LOAD.

ELECTRICAL SCHEDULES | 3

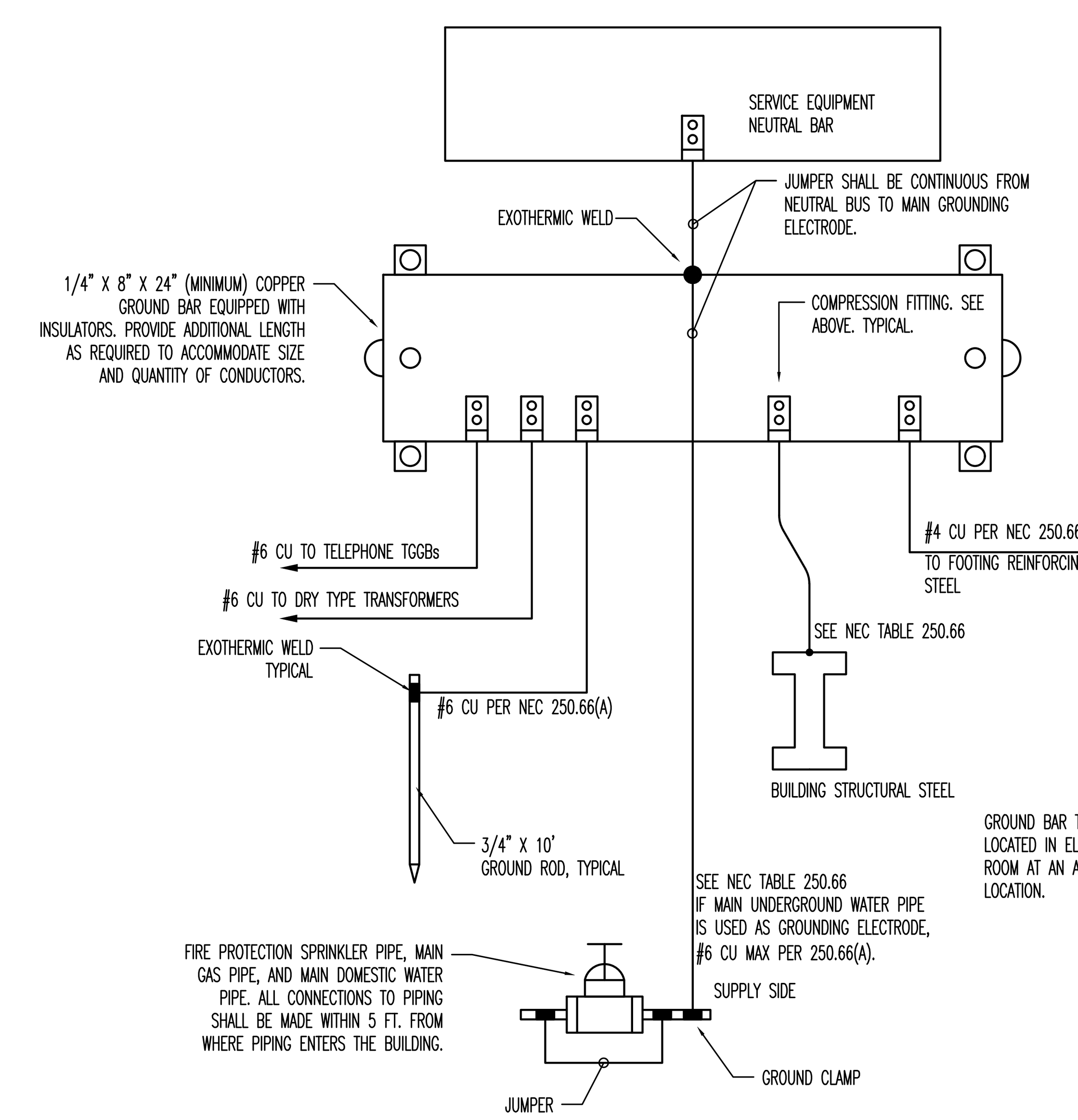

GROUNDING DETAIL - NO SCALE | 3

Kilian Engineering Inc.
PO Box 3301, Henderson, NC 27536 | www.kilianengineering.com
(P) 252.438.8778 | CORPORATE LICENSE C-2277

NORTH CAROLINA PROFESSIONAL SEAL 048012 ENGINEER JACOB L HAMILTON 5-27-20
SEAL

KILIAN ENGINEERING, INC. CORPORATE SEAL NORTH CAROLINA
SEAL

NEW BUILDING FOR:
JC POWDERCOATING
FUQUAY-VARINA, NORTH CAROLINA

REVISION:

NO.	DATE	DESCRIPTION

ISSUED:

NO.	DATE	DESCRIPTION
0	5/27/20	FOR PERMIT

DRAWN BY: JLH
CHECKED BY: MWK/CML

ELECTRICAL NOTES AND SCHEDULES

SHEET NO.
E-1

PROJECT NO: 20139

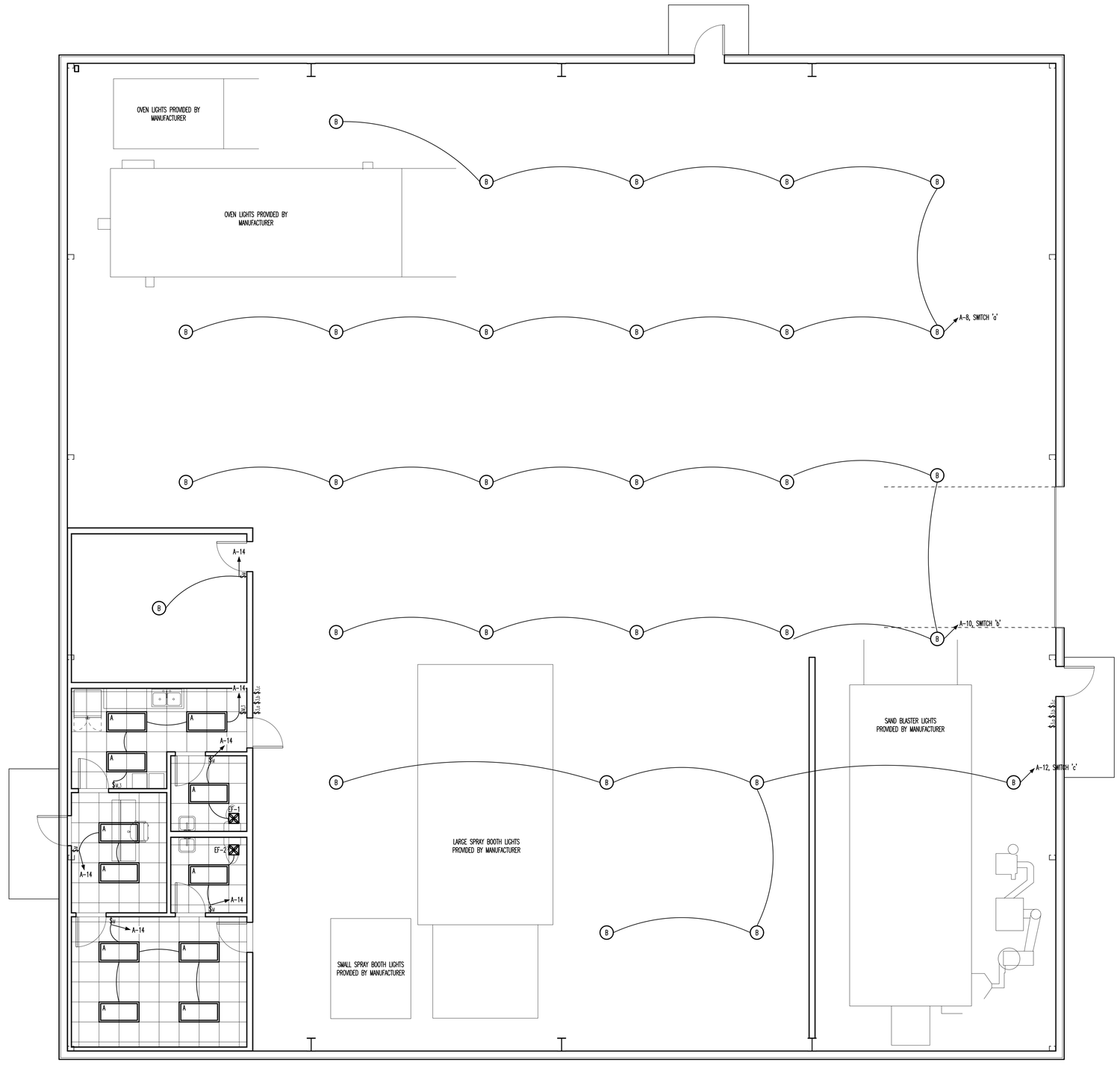

NO FIRE RATED ASSEMBLIES

LIGHTING PLAN - SCALE: 1/4" = 1' | 1

Kilian Engineering Inc.
PO Box 3301, Henderson, NC 27536 | www.kilianengineering.com
(P) 252.438.8778 | CORPORATE LICENSE C-2277

NORTH CAROLINA PROFESSIONAL SEAL 049601 ENGINEER JACOB L. HAMILTON 5-27-20
SEAL

KILIAN ENGINEERING, INC. CORPORATE SEAL NORTH CAROLINA
SEAL

NEW BUILDING FOR:
JC POWDERCOATING
FUQUAY-VARINA, NORTH CAROLINA

REVISION:

NO.	DATE	DESCRIPTION

ISSUED:

NO.	DATE	DESCRIPTION
1	5/27/20	FOR PERMIT

DRAWN BY: JLH
CHECKED BY: MWK/CML

LIGHTING PLAN

SHEET NO.
E-2

PROJECT NO: 20139

PAINT BOOTH NOTES

1. INSIDE OF PAINT BOOTH IS CLASS 1 DIVISION 1. INSIDE OF EXHAUST DUCT FOR PAINT BOOTH IS CLASS 1, DIVISION 1.
2. THE DIVISION 2 LOCATION SHALL EXTEND 5 FEET HORIZONTALLY AND 3 FEET VERTICALLY FROM THE OPEN FACE OR OPEN FRONT OF THE BOOTH. SEE NEC FIGURE 516.3(C)(2).
3. WIRING METHODS WITHIN THESE ZONES SHALL COMPLY WITH NEC 501. THREADED RIGID METAL CONDUIT OR THREADED INTERMEDIATE METAL CONDUIT, TYPE MI CABLE WITH TERMINATION FITTINGS LISTED FOR THE LOCATION ARE PERMITTED. WHERE FLEXIBLE CONNECTIONS ARE REQUIRED, FLEXIBLE FITTINGS LISTED FOR CLASS 1, DIVISION 1 IS PERMITTED.
4. CONDUIT SEALS SHALL BE PROVIDED IN ACCORDANCE WITH 501.15. IN PARTICULAR, ALL CONDUITS ENTERING ENCLOSURES MUST HAVE A SEAL FITTING WITHIN 18" OF SAID ENCLOSURE. CONDUITS LEAVING A CLASS 1, DIVISION 1 BOUNDARY AND A CLASS 1, DIVISION 2 BOUNDARY SHALL HAVE A SEAL FITTING INSTALLED ON EITHER SIDE OF THE BOUNDARY WITHIN 10 FEET.
5. PORTABLE ELECTRIC LUMINAIRES OR OTHER UTILIZATION EQUIPMENT SHALL NOT BE USED IN A SPRAY AREA DURING SPRAY OPERATIONS.
6. ALL ELECTRICALLY CONDUCTIVE OBJECTS IN THE SPRAY AREA SHALL BE ADEQUATELY GROUNDED. SEE NEC 516 FOR MORE DETAILS.
7. SIGNAGE SHALL BE POSTED AROUND THE SPRAY BOOTH TO INDICATE THE FOLLOWING:
   - 7.1. DESIGNATE THE PROCESS ZONE AS DANGEROUS WITH REGARD TO FIRE AND ACCIDENT.
   - 7.2. IDENTIFY THE GROUNDING REQUIREMENTS FOR ALL ELECTRICALLY CONDUCTIVE OBJECTS IN THE SPRAY AREA.
   - 7.3. RESTRICT ACCESS TO QUALIFIED PERSONNEL ONLY.
8. SPRAY APPARATUS MUST BE INTERLOCKED WITH EXHAUST FAN OPERATION–EXHAUST FAN MUST BE RUNNING FOR SPRAY APPLICATION EQUIPMENT TO OPERATE.
9. ALL FIXED WIRING ABOVE THE CLASS 1 LOCATION SHALL BE IN METAL RACEWAYS, TYPE MC, TYPE MI, OR TYPE TC CABLE.
10. EQUIPMENT THAT MAY PRODUCE SPARKS, ARCS, OR PARTICLES OF HOT METAL THAT ARE LOCATED ABOVE CLASS 1 LOCATIONS SHALL COMPLY WITH 516.7(B). THIS MAY NECESSITATE RELOCATED OR ELIMINATE SOME FIXED LIGHTING ABOVE THE PAINT BOOTH. (NEC 516.7 WIRING AND EQUIPMENT NOT WITHIN CLASS I AND II LOCATIONS
    (A)ALL FIXED WIRING ABOVE THE CLASS I AND II LOCATIONS SHALL BE IN METAL RACEWAYS, RIGID NONMETALLIC CONDUIT, OR ELECTRICAL NONMETALLIC TUBING, OR SHALL BE TYPE MI, TC, OR MC CABLE. CELLULAR METAL FLOOR RACEWAYS SHALL BE PERMITTED ONLY FOR SUPPLYING CEILING OUTLETS OR EXTENSIONS TO THE AREA BELOW THE FLOOR OF A CLASS I OR II LOCATION, BUT SUCH RACEWAYS SHALL HAVE NO CONNECTIONS LEADING INTO OR THROUGH THE CLASS I OR II LOCATION ABOVE THE FLOOR UNLESS SUITABLE SEALS ARE PROVIDED.
    (B)EQUIPMENT THAT MAY PRODUCE ARCS, SPARKS, OR PARTICLES OF HOT METAL, SUCH AS LAMPS AND LAMPHOLDERS FOR FIXED LIGHTING, CUTOUTS, SWITCHES, RECEPTACLES, MOTORS, OR OTHER EQUIPMENT HAVING MAKE-AND-BREAK OR SLIDING CONTACTS, WHERE INSTALLED ABOVE A CLASS I OR II LOCATION OR ABOVE A LOCATION WHERE FRESHLY FINISHED GOODS ARE HANDLED, SHALL BE OF THE TOTALLY ENCLOSED TYPE OR BE CONSTRUCTED SO AS TO PREVENT THE ESCAPE OF SPARKS OR HOT METAL PARTICLES.)

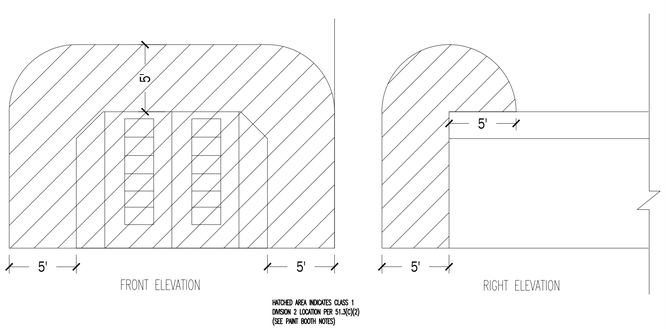

NO FIRE RATED ASSEMBLIES

PAINT BOOTH DETAIL - NO SCALE | 1

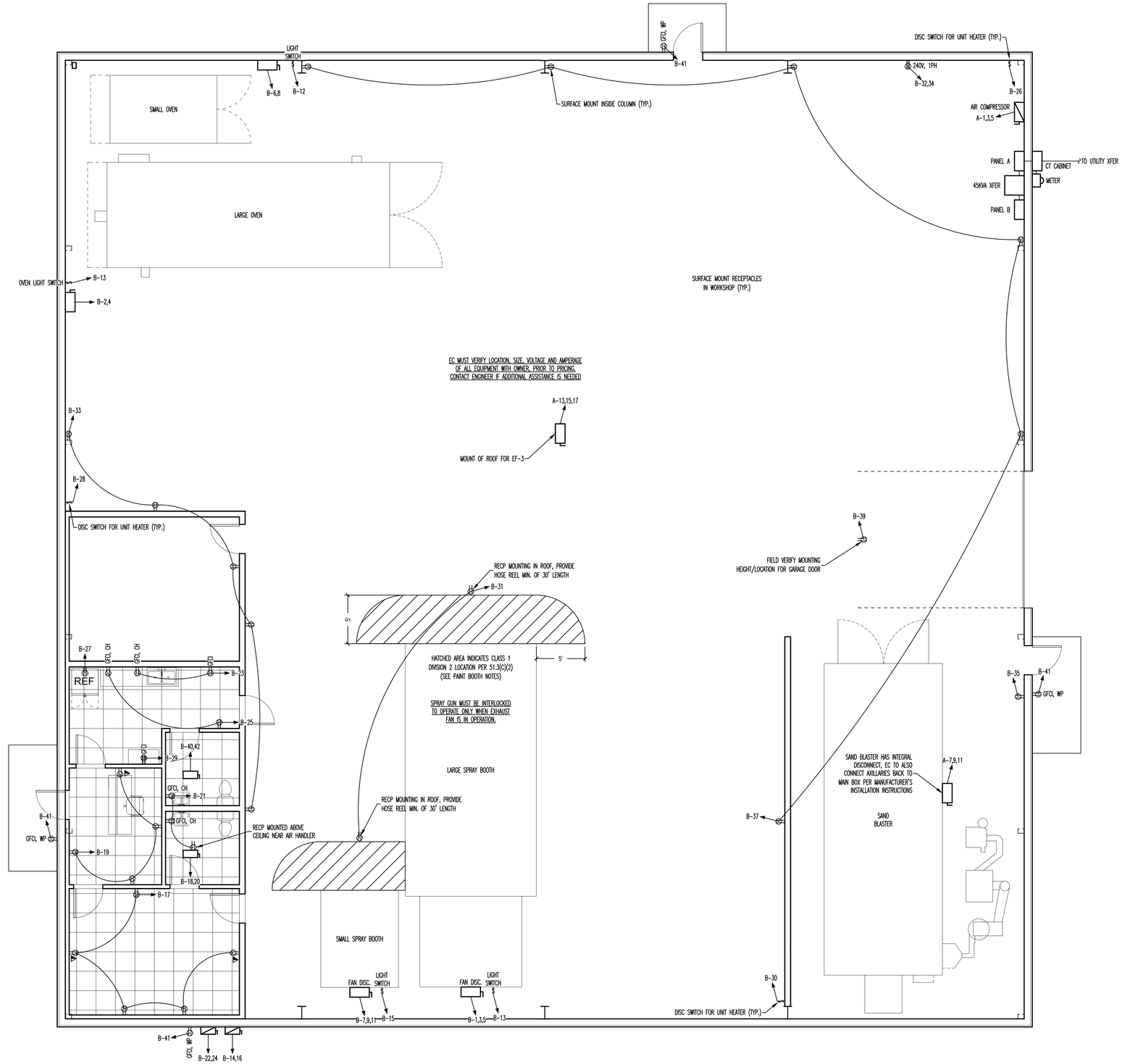

POWER PLAN - SCALE: 1/4" = 1' | 2

Kilian Engineering Inc.
PO Box 3301, Henderson, NC 27536 | www.kilianengineering.com
(P) 252.438.8778 | CORPORATE LICENSE C-2277

NORTH CAROLINA PROFESSIONAL SEAL 049612 ENGINEER JACOB L. HAMILTON 5-27-20
SEAL

KILIAN ENGINEERING, INC. CORPORATE SEAL NORTH CAROLINA
SEAL

NEW BUILDING FOR:
JC POWDERCOATING
FUQUAY-VARINA, NORTH CAROLINA

REVISION:

NO.	DATE	DESCRIPTION

ISSUED:

NO.	DATE	DESCRIPTION
0	5/27/20	FOR PERMIT

DRAWN BY: JLH
CHECKED BY: MWK/CML

POWER PLAN

SHEET NO.
E-3

PROJECT NO: 20139