GENERAL NOTES

1. ALL WORK SHALL BE IN FULL COMPLIANCE WITH NFPA 13R (2013) AND THE NORTH CAROLINA STATE BUILDING CODE. THE GENERAL CONDITIONS OF THE CONTRACT APPLY.

2. THE FP CONTRACTOR SHALL PROVIDE ALL LABOR AND MATERIALS REQUIRED FOR A COMPLETE WORKING SYSTEM WHICH MEETS ALL REQUIREMENTS OF THE STATE BUILDING CODE, NFPA 13R, AND LOCAL AUTHORITY.

3. ALL MATERIALS AND EQUIPMENT SHALL BE NEW, UL LISTED FOR THE INTENDED USE AND SHALL BE INSTALLED IN FULL COMPLIANCE WITH MANUFACTURERS' RECOMMENDATIONS.

4. SPRINKLER HEADS ARE SPACED PER MANUFACTURES CUTSHEETS. FAST RESPONSE HEADS SHALL BE USED.

5. ALL PIPE SHALL BE APPROVED CPVC LISTED FOR FIRE PROTECTION USE.

6. SPRINKLER SYSTEM IS WET PIPE TYPE FOR ALL FLOORS.

7. LOCATIONS OF PIPING AS SHOWN ON THE DRAWINGS ARE APPROXIMATE AND SUBJECT TO MINOR ADJUSTMENTS IN THE FIELD.

8. SPRINKLERS SHALL NOT BE REQUIRED IN BATHROOMS OF 55 SQ.FT. AND LESS PER NFPA 13R – 6.6.2

9. SPRINKLERS SHALL NOT BE REQUIRED IN CLOTHES CLOSETS, LINEN CLOSETS, AND PANTRIES PER NFPA 13R – 6.6.3

10. SPRINKLERS SHALL NOT BE REQUIRED IN ATTICS, PENTHOUSE EQUIPMENT ROOMS, ELEVATOR MACHINE ROOMS, CONCEALED SPACES DEDICATED EXCLUSIVELY TO AND CONTAINING ONLY DWELLING UNIT VENTILATION EQUIPMENT, FLOOR/ CEILING SPACES, ELEVATOR SHAFTS, CRAWL SPACES AND OTHER CONCEALED SPACES THAT ARE NOT USED OR INTENDED FOR LIVING PURPOSES AND DO NOT CONTAIN FUEL-FIRED EQUIPMENT. PER NFPA 13R – 6.6.6

11. PIPING TO BE INSTALLED ON CONDITIONED SIDE OF WALL AND CEILINGS. POLYPLASTIC AND INSULATION SHALL BE INSTALLED BY OTHERS.

12. NFPA 13R, 2013 6.8.2 – THE SPRINKLER SYSTEM PIPING SHALL NOT HAVE A SEPARATE CONTROL VALVE INSTALLED UNLESS SUPERVISED BY ONE OF THE FOLLOWING METHODS: 1) CENTRAL STATION, PROPRIETARY, OR REMOTE STATION ALARM SERVICE 2) LOCAL ALARM SERVICE THAT CAUSES THE SOUNDING OF AN AUDIBLE SIGNAL ATTENDED LOCATION, 3) VALVES ARE LOCKED OPEN.

SCOPE OF WORK

13R RESIDENTIAL SPRINKLER SYSTEM

- FLSA TO DESIGN AND INSTALL ALL PIPING, FITTINGS AND HEADS IN RESIDENTIAL UNITS WITHIN AREAS OF WORK (SEE SITE PLAN THIS PAGE).
- SPRINKLER SYSTEM DESIGNED PER NFPA 13R, 2013 EDITION.
- FLSA TO INSTALL NEW 2" BACKFLOW IN SPRINKLER RISER ROOM AS SHOWN. SEE RISER DETAIL THIS PAGE
- FLSA TO CONNECT SYSTEM RISER TO REMOTE 2" FDC RUN-IN (BY OTHERS) AS SHOWN. SEE RISER DETAIL THIS PAGE.
- FLSA TO INSTALL DRAIN TO EXTERIOR WITH TEST AND DRAIN CONNECTION (PIPE ROUTE NOT SHOWN, TO BE CUT-ON-JOB BY FLSA)
- ALL PIPING AND FITTINGS TO BE CPVC EXCLUDING RISER AND UNDERGROUND (UNDERGROUND BY OTHERS)
- ALL PENDENTS AND SIDEWALLS TO BE SEMI-RECESSED WITH A WHITE FINISH
- PIPING TO BE INSTALLED ON CONDITIONED SIDE OF WALL AND CEILINGS. POLYPLASTIC AND INSULATION PROVIDED BY OTHERS
- ALL CEILINGS ARE FLAT, CEILING HEIGHTS 8'-0" UNLESS OTHERWISE NOTED.
- A CABINET WITH STOCK OF EXTRA SPRINKLERS SHALL BE PROVIDED IN ACCORDANCE WITH NFPA 13R.
- METHODS OF HANGING PIPES, HEADERS, AND BRANCHES SHALL BE IN ACCORDANCE WITH NFPA 13R.
- SEE GENERAL NOTES

THIS FIRE SPRINKLER PLANNING AND DESIGN DRAWING HAS BEEN PREPARED BY FIRE & LIFE SAFETY AMERICA, INC. AS A LICENSED FIRE SPRINKLER CONTRACTOR UNDER ARTICLE 2 OF CHAPTER 87 OR THE GENERAL STATUTES FOR THE STATE OF NORTH CAROLINA.

EXCLUSIVE USE PURSUANT TO G.S.-89C-25(8) IS FOR FIRE & LIFE SAFETY AMERICA, INC. AND FIRE & LIFE SAFETY AMERICA, INC. SHALL PERFORM ANY AND ALL INSTALLATION WORK AND OTHER WORK PERFORMED IN RELIANCE ON THE DRAWING PURSUANT TO G.S.-55B-15(A)(2).

INSTALLATION WORK OR ANY OTHER WORK PERFORMED BY ANOTHER PERSON OR ENTITY IN RELIANCE UPON THIS DRAWING OR ANY COPY THEREOF IS STRICTLY PROHIBITED.

COPYRIGHT FIRE & LIFE SAFETY AMERICA, INC., ALL RIGHTS RESERVED.

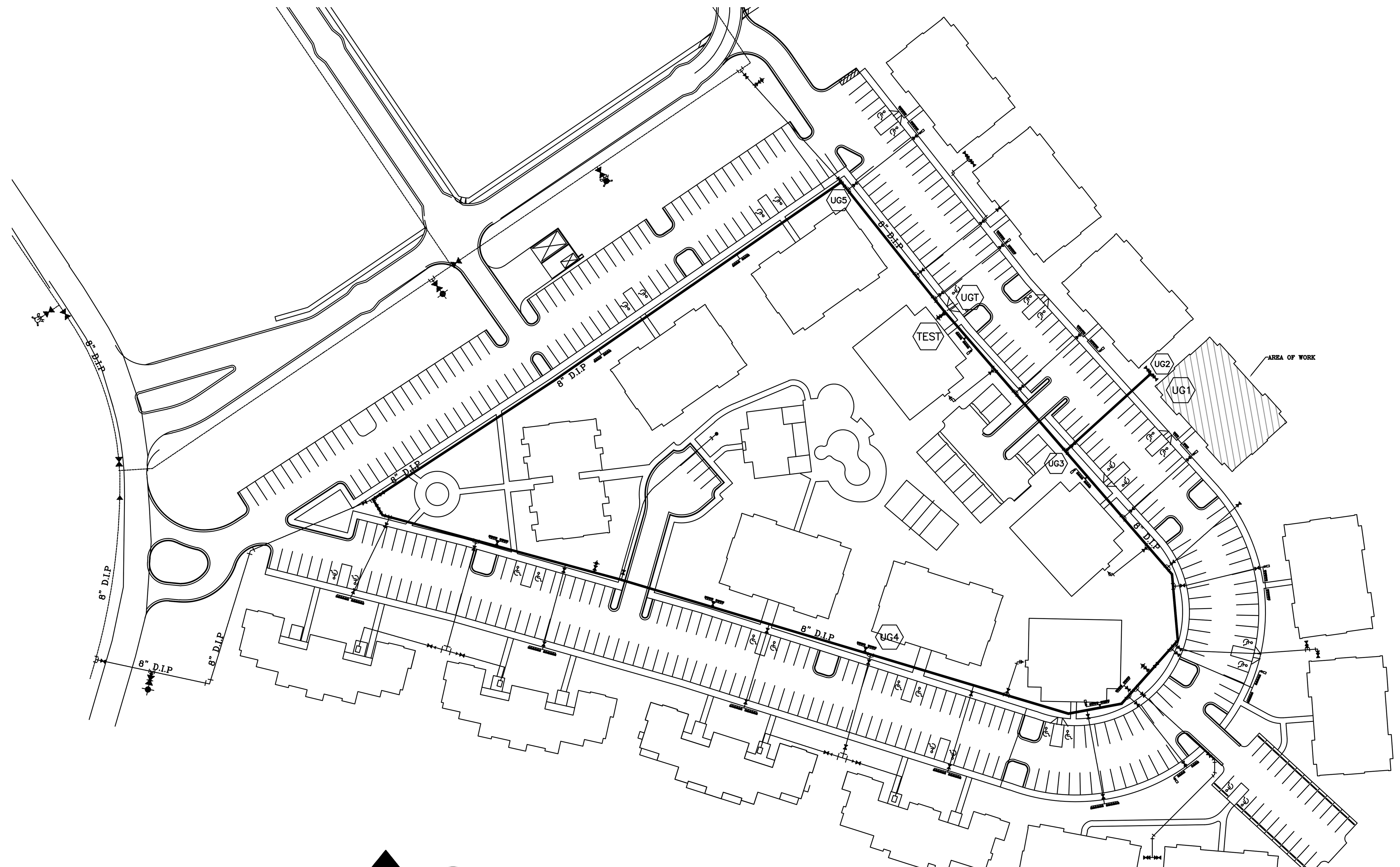

1 FP1 HYDRAULIC REFERENCE PLAN
NOT TO SCALE

NODE LEGEND

UG1 TO UG2:	2" COPPER	10–0
UG2 TO UG3:	4" PVC	152–0
UG3 TO UGT:	8" D.I.	170–0
UG3 TO UG4:	8" D.I.	516–0
UG4 TO UG5:	8" D.I.	948–0
UG5 TO UGT:	8" D.I.	160–0
UGT TO TEST:	8" D.I.	15–0

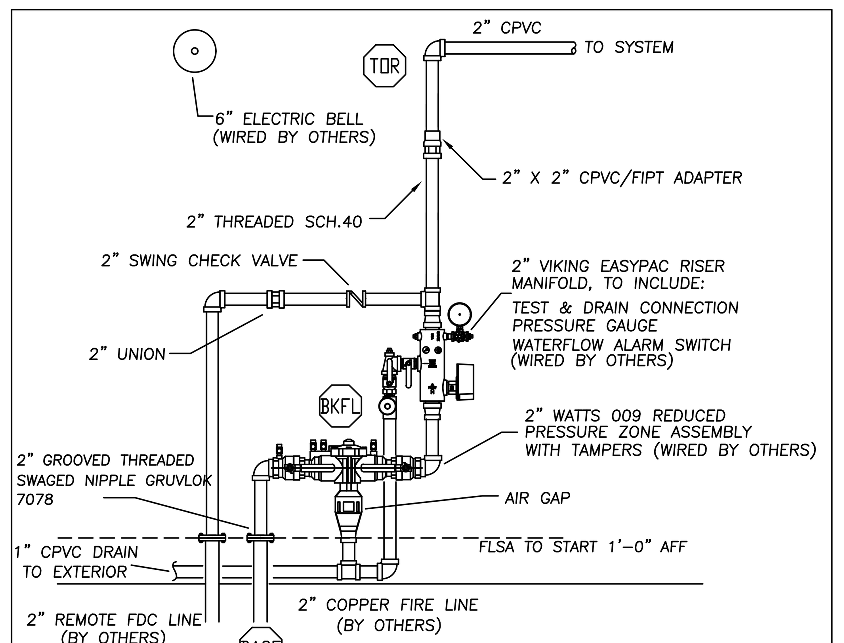

RISER DETAIL
NTS

PIPE HANGER DETAIL – SOLID JOIST & T.G.I. SIMILAR

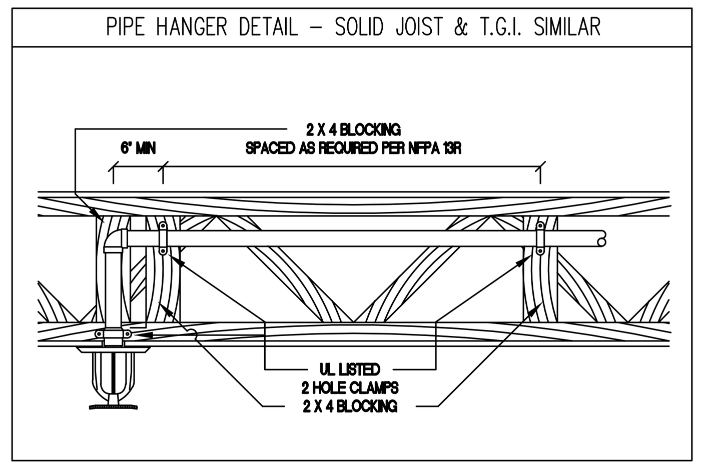

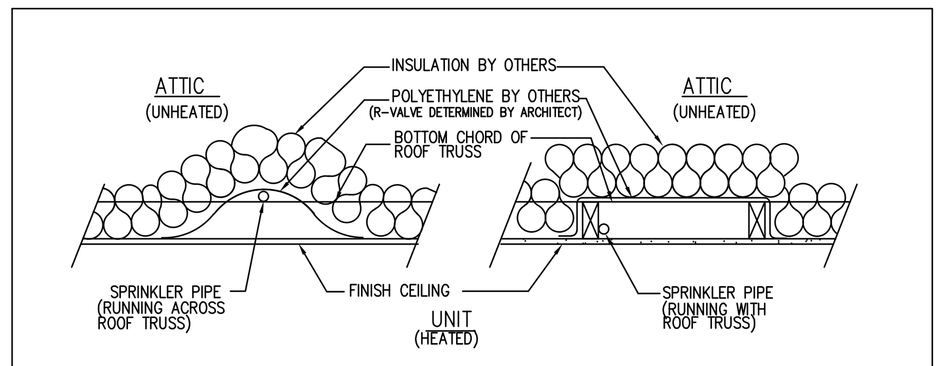

FREEZE PROTECTION DETAILS
(TYP. FOR ALL ATTIC PIPING)

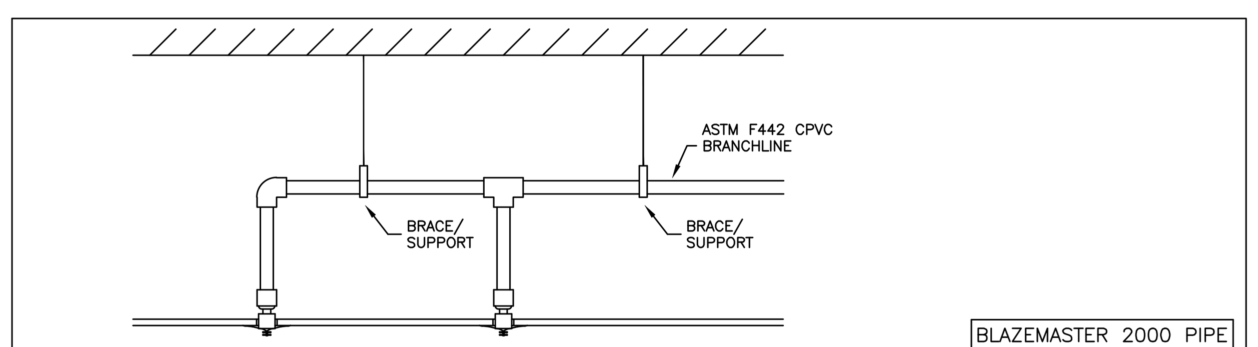

TABLE 1 MAXIMUM SUPPORT SPACING DISTANCE END LINE SPRINKLER HEAD DROP ELBOW		
PIPE SIZE inches	SYSTEM PRESSURE	
	< 100 psi	> 100 psi
3/4"	9"	6"
1"	12"	9"
1-1/4"	16"	12"
1-1/2"–3"	24"	12"

TABLE 2 MAXIMUM SUPPORT SPACING DISTANCE INLINE SPRINKLER HEAD DROP TEE		
PIPE SIZE inches	SYSTEM PRESSURE	
	< 100 psi	> 100 psi
3/4"	4'	3'
1"	5'	4'
1-1/4"	6'	5'
1-1/2"–3"	7'	7'

BLAZEMASTER 2000 PIPE SDR 13.5 (ASTM F442) HANGER SPACING			
NOMINAL SIZE inches	(mm)	MAX SPACING feet	(m)
3/4"	(20.0)	5.5'	(1.7)
1"	(25.0)	6.0'	(1.8)
1-1/4"	(32.0)	6.5'	(2.0)
1-1/2"	(40.0)	7.0'	(2.1)
2"	(50.0)	8.0'	(2.4)
2-1/2"	(65.0)	9.0'	(2.7)
3"	(80.0)	10.0'	(3.0)

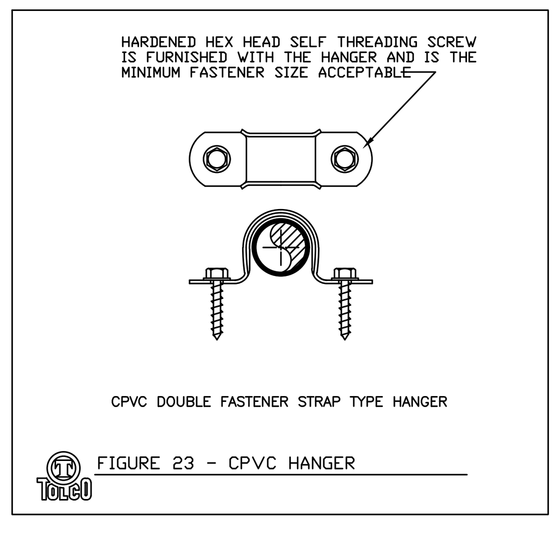

CPVC DOUBLE FASTENER STRAP TYPE HANGER

FIGURE 23 – CPVC HANGER

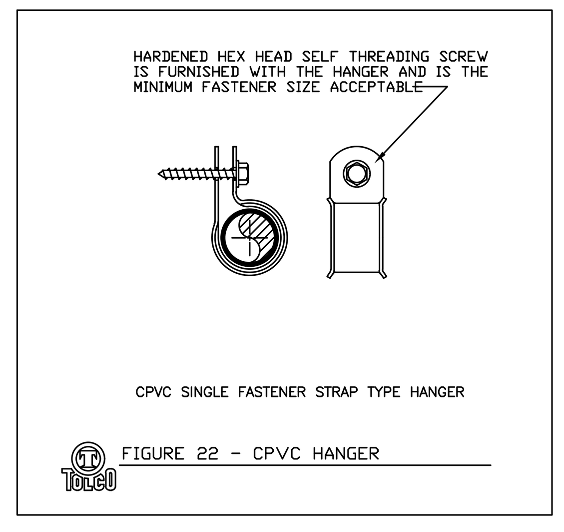

CPVC SINGLE FASTENER STRAP TYPE HANGER

FIGURE 22 – CPVC HANGER

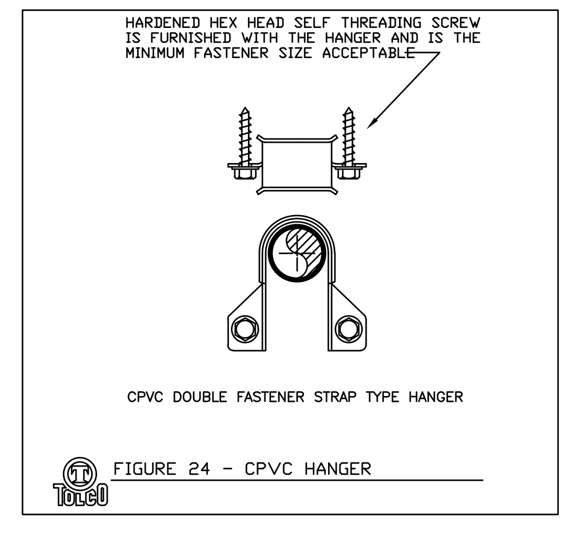

CPVC DOUBLE FASTENER STRAP TYPE HANGER

FIGURE 24 – CPVC HANGER

Sprinkler Design Data

Project Name: FAIRWAY POINTE BUILDING 17		System: WET
Project Street Address: 288 GALLERY DRIVE, SPRING LAKE, NC 28390		Sys. Sq. Ft.: 20,000
Suite: N/A	Floor#: VARIES	Ceiling Height: VARIES
Designed By: RYAN COLLINS	Phone: (919) 872–3250	Total Bldg. Hgt.:
Occupancy: RESIDENTIAL, STORAGE	Hazard: 13R / ORDINARY 1	

Design Summary

AREA #1	LEVEL 3 BREEZEWAY	LEVEL 3 LIVING ROOM	LEVEL 1 STORAGE	
Design Method	AREA/DENSITY	AREA/DENSITY	AREA/DENSITY	
Design Area #	REMOTE AREA 1	REMOTE AREA 2	REMOTE AREA 3	
Location	3RD FLOOR BREEZEWAY	3RD FLOOR LIVING ROOM	1ST FLOOR	
Type of System	WET SYSTEM	WET SYSTEM	WET SYSTEM	
Hazard Class	LIGHT HAZARD	LIGHT HAZARD	ORDINARY HAZARD 1	
Criteria From	NFPA 13R 2013 ED	NFPA 13R 2013 ED	NFPA 13 2013 ED	
Design Area	4 HEADS	4 HEADS	1516 SQ. FT.	
Spacing of heads	VARIES	VARIES	VARIES	
Density	.10	.05	.15	
K–Factor	5.6K	4.9K	5.6K	
Hose Allowance	0	0	250	
# Design Sprinklers	4	4	9	
Sprinkler Area	VARIES	VARIES	VARIES	
Requirements @ BKFL				
G.P.M. Req'd @ BKFL	69.50 GPM	85.16 GPM	173.75 GPM	
P.S.I. Req'd @ BKFL	49.974 PSI	71.970 PSI	48.161 PSI	
Requirements @ TEST				
G.P.M. Req'd @ TEST	69.499 GPM	85.164 GPM	423.752 GPM	
P.S.I. Req'd @ TEST	63.600 PSI	86.413 PSI	69.755 PSI	
Safety Factor @ TEST	46.08 PSI	23.12 PSI	31.22	

Water Supply Information

Tested by	FIRE AND LIFE SAFETY AMERICA	Date/Time	6/24/2020	1:00 PM	Pressure Hydrant		
Hydrant Elevation	110'–0"						
Static	110 PSI	Residiual	50 PSI		Flow	1180 PSI	
Copy of Water Test Data Included with Calculation is required							

SPRINKLER SUMMARY

SYM	TYPE	FINISH	TEMP	ORIF.	"K"	NPT	MANUF.	SIN#	ESCUTCHEON	QTY.
⦿	QR RES. PENDENT	WHITE	175°	1/2"	4.9K	1/2"	VIKING	VK468	SEMI-RECESSED	156
◁	QR DRY SIDEWALL	WHITE	175°	1/2"	5.6K	1/2"	VIKING	VK178	ADJ. STANDARD	21
⊗	QR PENDENT	WHITE	175°	1/2"	5.6K	1/2"	VIKING	VK3021	SEMI-RECESSED	19
			°							0
			°							0
			°							0
			°							0
			°							0
									TOTAL SPRINKLERS THIS PROJECT	196

DRY HSW DETAIL – NOT TO SCALE

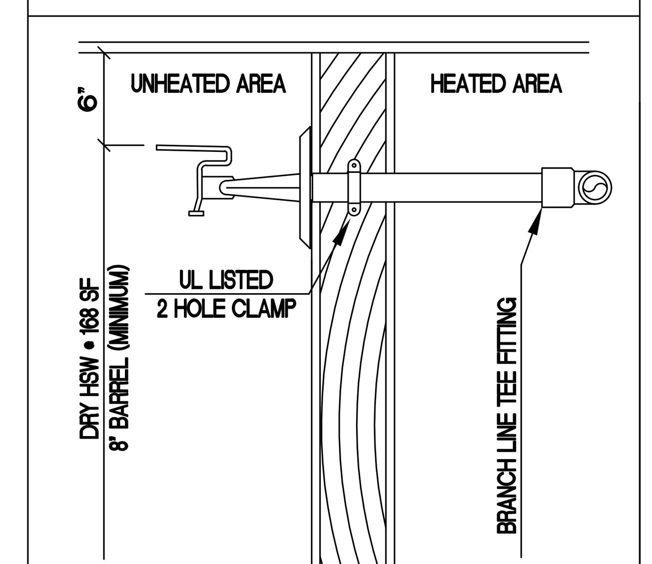

DETAIL #6

System No. W-L-1085
F Rating - 1 and 2 Hr (See Item 1B)
T Rating - 0 Hr
L Rating At Ambient - Less Than 1 CFM/Sq Ft
L Rating At 400 F - 4 CFM/Sq Ft

WL 1085

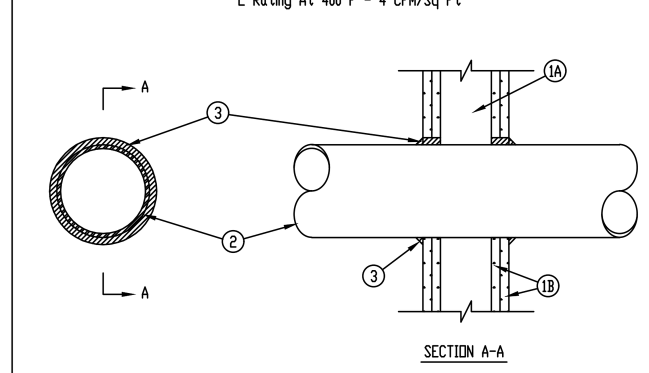

SECTION A-A

1. Wall Assembly The 1 or 2 hr fire-rated gypsum wallboard/stud wall assembly shall be constructed of the materials and in the manner specified in the individual U300 or U400 Series Wall and Partition Designs in the UL Fire Resistance Directory and shall include the following construction features:
   A. Studs Wall framing may consist of either wood studs or steel channel studs. Wood studs to consist of nom 2 by 4 in. lumber spaced 16 in. OC. Steel studs to be min 2-1/2 in. wide and spaced max 24 in. OC.
   B. Gypsum Board* 5/8 in. thick, 4 ft wide with square or tapered edges. The gypsum wallboard type, number of layers, fastener type and sheet orientation shall be as specified in the individual Wall and Partition Design. Max diam of opening is 13-1/4 in.
   Diam of circular opening cut through gypsum wallboard on each side of wall assembly to be min 1/4 in. to max 1/2 in. larger than outside diam of through penetrant (Item 2). The hourly F Rating of the firestop system is equal to the hourly fire rating of the wall assembly in which it is installed.
2. Through Penetrants One metallic pipe, conduit or tubing to be installed either concentrically or eccentrically within the firestop system. Pipe, conduit or tubing to be rigidly supported on both sides of wall assembly. The annular space between the through-penetrant and the periphery of the opening shall be min 0 in. to max 1/4 in. The following types and sizes of metallic pipes, conduits or tubing may be used:
   A. Steel Pipe Nom 12 in. diam (or smaller) Schedule 10 (or heavier) steel pipe.
   B. Iron Pipe Nom 12 in. diam (or smaller) cast or ductile iron pipe.
   C. Conduit Nom 6 in. diam (or smaller) steel electrical metallic tubing or steel conduit.
   D. Copper Tubing Nom 6 in. diam (or smaller) Type L (or heavier) copper tubing.
   E. Copper Pipe Nom 6 in. diam (or smaller) Regular (or heavier) copper pipe.
3. Fill, Void or Cavity Material* -- Sealant Fill material to be forced into the annulus to maximum extent possible. Additional fill material to be installed such that a min 1/2 in. crown is formed around the penetrating item and lapping 1/4 in. beyond the periphery of the opening.
   HILTI CONSTRUCTION CHEMICALS, DIV OF
   HILTI INC -- FS-One Sealant

*Bearing the UL Classification Marking

HILTI FIRESTOP SYSTEMS

Reproduced by HILTI, Inc. Courtesy of Underwriters Laboratories, Inc. November 24, 1999

C UL US CLASSIFIED

HEAT ZONE CRITERIA – NTS

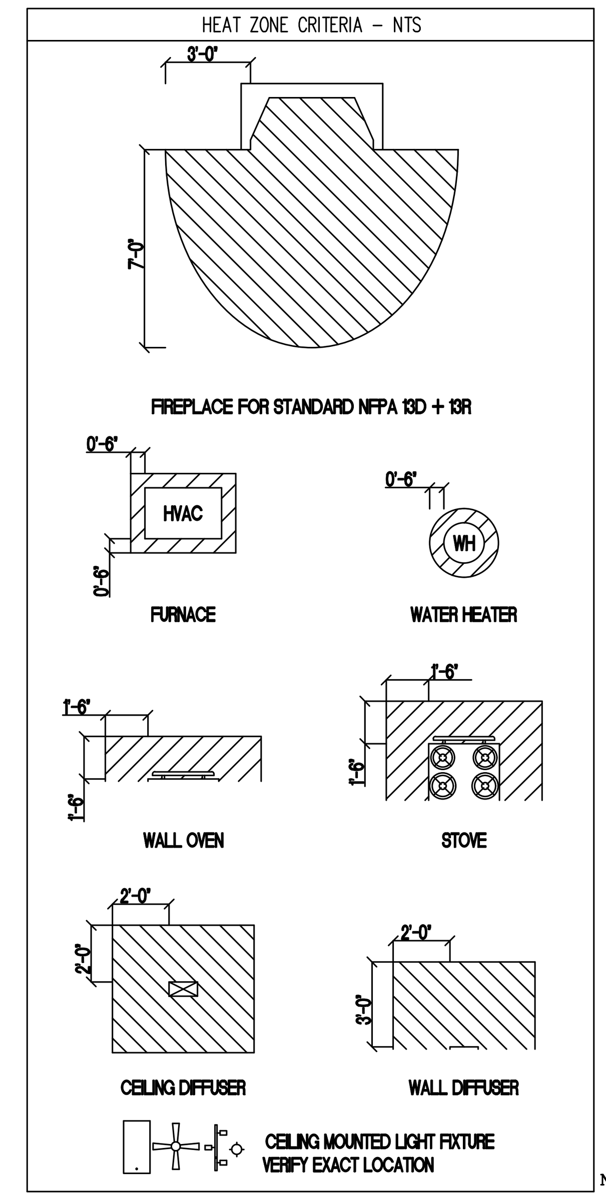

Sean K. Foster
LEVEL III AUTOMATIC SPRINKLER SYSTEMS
#23967
NICET CERTIFIED

NORTH CAROLINA STATE LICENSE #29733

NORTH CAROLINA STATE LICENSE #29733

APPROVING AGENCIES

APPROVING AUTHORITY: HARNETT COUNTY
UNDERWRITER: N/A
GENERAL CONTRACTOR: ANDERSON CREEK DEVELOPERS
ADDRESS: 125 WHISPERING PINES DR.
CITY & STATE: SPRING LAKE, NC 28390
PHONE NO.: (910) 814–2115
FAX NO.: N/A

SYSTEM DESIGN CRITERIA

TYPE SYSTEM: ■ WET ☐ DRY ☐ DELUGE ☐ PREACTION ☐ ANTI-FREEZE
NFPA STANDARD: ☐ #13 ☐ #13D ■ #13R ☐ #14 ☐ #20 ☐ #22 ☐ #24 ☐ #231 ☐ #231C ☐ #15 ☐ #16 ☐ #409
OCCUPANCY: RESIDENTIAL – 13R HAZARD: RESIDENTIAL PIPE ID REQUIRED: NO
MAXIMUM SPACING: SEE HYD. CALC. LOCAL HOSE THREADS: N.S.T. SLEEVES REQUIRED: NO
SPRINKLERS ARE REQUIRED TO BE LOCATED IN THE CENTER OF THE CEILING TILES.

PIPE TYPES AND FITTING TYPES

LINE PIPING: CPVC LINE FITTINGS: CPVC
MAIN PIPING: CPVC MAIN FITTINGS: CPVC

GENERAL NOTES

1. Freeze Protection: The owner is responsible for maintaining a min. of 40° F temperature for all wet systems and portions of other systems containing water.
2. M.I.C. Protection: The owner is responsible for all detection/testing/prevention.
3. Design is subject to minor deviations arising from field conditions and/or trade coordination. Such deviations shall not affect code compliance or scope of work and shall not require resubmittal except in "as-built" if required by contract documents.
4. Underground provider to ensure lead-in is plumbed, 2-holed, rodded, flushed, thrust blocked and a fully executed underground test certificate required per NFPA to be provided to FLSA prior to connection. FLSA is not responsible for damage to its system or components due to debris entering the system from underground water lines provided "by others".
5. This drawing is property of Fire and Life Safety America and is not to be duplicated and/or distributed without written authorization from FLSA.
6. Hydrostatic testing will only be performed with water or air depending on adequate temperature. Any other form of testing is excluded.

GRAPHIC SCALE: 1/8" = 1'– 0"
0 4 8 16 32

REVISIONS

#	DATE	DESCRIPTION	BY
1	7/2/2020	SUBMITTAL TO AHJ	RCC
2			
3			
4			
5			
6			
7			

RICHMOND, VA CHESAPEAKE, VA ROANOKE, VA SPRINGFIELD, VA ORLANDO, FL
HOUSTON, TX SAN ANTONIO, TX DALLAS, TX AUSTIN, FL
CHARLOTTE, NC RALEIGH, NC BALTIMORE, MD ATLANTA, GA
1731 Round Rock Drive
Raleigh, NC 27615
PHONE (919) 872–3250
FAX (919) 877–5775

FLSA FIRE & LIFE SAFETY AMERICA PROTECTING AMERICA

SITE PLAN AND DETAILS
FAIRWAY POINTE BLDG 17
288 GALLERY DR.
SPRING LAKE, NC 28390

JOB #:	20NC1473
DATE:	6/11/2020
DRAWN BY:	R. COLLINS
SCALE:	AS NOTED

DRAWING #: FP1 OF 4

SPRINKLER SUMMARY										
SYM	TYPE	FINISH	TEMP	ORIF.	"K"	NPT	MANUF.	SIN#	ESCUTCHEON	QTY.
◉	QR RES. PENDENT	WHITE	175°	1/2"	4.9K	1/2"	VIKING	VK468	SEMI-RECESSED	32
◁	QR DRY SIDEWALL	WHITE	175°	1/2"	5.6K	1/2"	VIKING	VK178	ADJ. STANDARD	5
⊗	QR PENDENT	WHITE	175°	1/2"	5.6K	1/2"	VIKING	VK3021	SEMI-RECESSED	19
			°							0
			°							0
			°							0
			°							0
			°							0
TOTAL SPRINKLERS THIS PROJECT:					196			TOTAL SPRINKLERS THIS DRAWING:		56

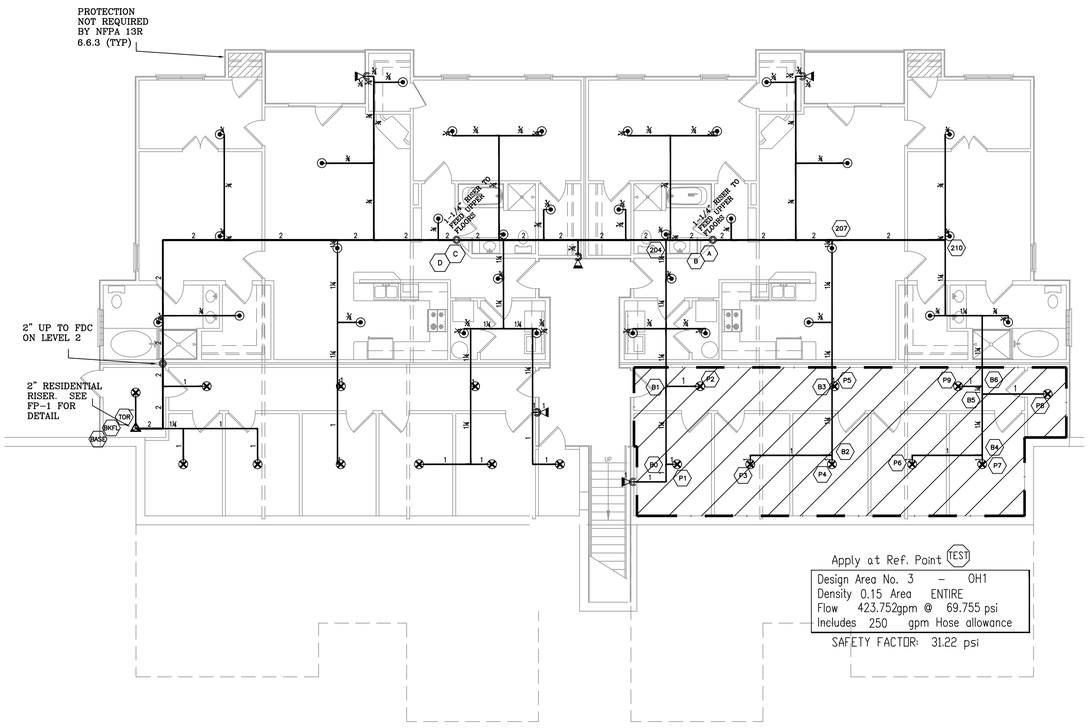

1 FP4 *1ST FLOOR PIPING PLAN*
1/8"-1'-0"

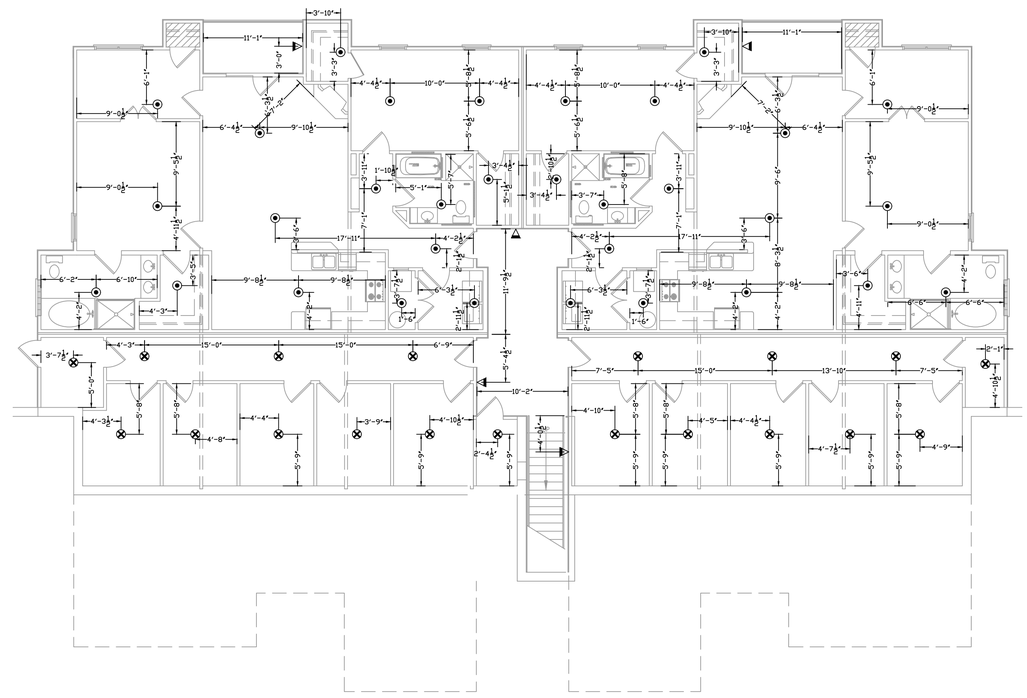

2 FP4 *1ST FLOOR R.C.P*
1/8"-1'-0"

NORTH CAROLINA STATE LICENSE #29733

APPROVING AGENCIES

APPROVING AUTHORITY: HARNETT COUNTY
PERMIT #: N/A
UNDERWRITER:
GENERAL CONTRACTOR: ANDERSON CREEK DEVELOPERS
ADDRESS: 125 WHISPERING PINES DR.
CITY & STATE: SPRING LAKE, NC 28390
PHONE NO.: (910) 814-2115
FAX NO.: N/A

SYSTEM DESIGN CRITERIA

TYPE SYSTEM: ■ WET ☐ DRY ☐ DELUGE ☐ PREACTION ☐ ANTI-FREEZE
NFPA STANDARD: ☐ 13 ☐ 13D ■ 13R ☐ 14 ☐ 20 ☐ 22 ☐ 24 ☐ 231 ☐ 231C ☐ 13 ☐ 16 ☐ 409
OCCUPANCY: RESIDENTIAL
HAZARD: RESIDENTIAL
MAXIMUM SPACING: SEE FFD CALC.
PIPE ID REQUIRED: NO
SPRINKLER TYPE: QUICK RESPONSE
SLEEVES REQUIRED: NO
HOSE THREADS: N.S.T.
LOCAL HOSE THREADS: CENTER OF THE CEILING TILES

PIPE TYPES AND FITTING TYPES

LINE PIPING: CPVC
LINE FITTINGS: CPVC
MAIN PIPING: CPVC
MAIN FITTINGS: CPVC

GENERAL NOTES

1. Freeze Protection: The owner is responsible for maintaining a min. of 40° F within all areas where water filled pipe is installed per NFPA 13 2007 edition.
2. M.U.C. Protection: The owner is responsible for all detections/alarm/fire protection arising from field conditions and/or trade damage to the system or components due to debris entering the system from open/in "as-built" if required by contract.
3. Design is subject to minor deviations arising from field conditions and/or trade damage to the system or components due to debris entering the system from open/in "as-built" if required by contract.
4. Underground provider to ensure load-in is plumbed, 2-bolted, welded, flushed, hydro tested and a fully executed underground test certificate required per NFPA 13 2007 edition. Underground provider is responsible for damage to the system or components due to debris entering the system from open/in "as-built" if required by contract.
5. The drawings, specifications, calculations, and other documents prepared by FLSA are instruments of service and shall not require reuse/modification except as agreed to by FLSA. These documents are not to be duplicated and/or distributed without written authorization from FLSA. Reproduction of these documents without written authorization from FLSA is prohibited and shall be subject to a minimum charge of $2,500.00 plus attorney's fees and expenses depending on the nature of conflict, if conflict is excluded.

GRAPHIC SCALE: 1/8" = 1'- 0"

REVISIONS

#	DATE	DESCRIPTION	BY
1	7/2/2020	SUBMITTAL TO AHJ	RCC

RICHMOND, VA CHESAPEAKE, VA ROANOKE, VA SPRINGFIELD, VA ORLANDO, FL
BOSTON, TX. HOUSTON, TX. SAN ANTONIO, TX. DALLAS, TX. AUSTIN, FL
CHARLOTTE, NC RALEIGH, NC FORT MYERS, FL ATLANTA, GA
1721 Round Rock Drive
Raleigh, NC 27615
PHONE: (919) 977-9300
FAX: (919) 977-9775

JOB #:	20NC-1473
DATE:	6/11/2020
DRAWN BY:	R. COLLINS
SCALE:	AS NOTED

LEVEL 1 REFLECTED CEILING PLAN

FAIRWAY POINTE BLDG 17
288 GALLERY DR.
SPRING LAKE, NC 28390

DRAWING #: FP2
OF 4

THIS FIRE SPRINKLER PLANNING AND DESIGN DRAWING HAS BEEN PREPARED BY FIRE & LIFE SAFETY AMERICA, INC. AS A LICENSED FIRE SPRINKLER CONTRACTOR. WORK WITHIN THIS DRAWING IS TO COMPLY WITH THE GENERAL STATUTES FOR THE STATE OF NORTH CAROLINA.

EXCLUSIVE USE PURSUANT TO G.S.-89C-25(B) IS FOR FIRE & LIFE SAFETY AMERICA, INC. AND FIRE & LIFE SAFETY AMERICA, INC. SHALL RETAIN ALL RIGHTS TO ALL DESIGNS, DRAWINGS, AND OTHER WORK PERFORMED IN RELIANCE ON THE DRAWING PURSUANT TO G.S.-58-1(A)(2).

INSTALLATION WORK OR ANY OTHER WORK PERFORMED BY ANOTHER PERSON OR ENTITY BASED ON THIS DRAWING OR ANY COPY THEREOF IS STRICTLY PROHIBITED

COPYRIGHT FIRE & LIFE SAFETY AMERICA, INC., ALL RIGHTS RESERVED.

SPRINKLER SUMMARY

SYM	TYPE	FINISH	TEMP	ORIF.	"K"	NPT	MANUF.	SIN#	ESCUTCHEON	QTY.
⊙	QR RES. PENDENT	WHITE	175°	1/2"	4.9K	1/2"	VIKING	VK468	SEMI-RECESSED	62
◁	QR DRY SIDEWALL	WHITE	175°	1/2"	5.6K	1/2"	VIKING	VK178	ADJ. STANDARD	8
⊗	QR PENDENT	WHITE	175°	1/2"	5.6K	1/2"	VIKING	VK3021	SEMI-RECESSED	0
			◦							0
			◦							0
			◦							0
			◦							0
			◦							0
TOTAL SPRINKLERS THIS PROJECT:					196			TOTAL SPRINKLERS THIS DRAWING:		70

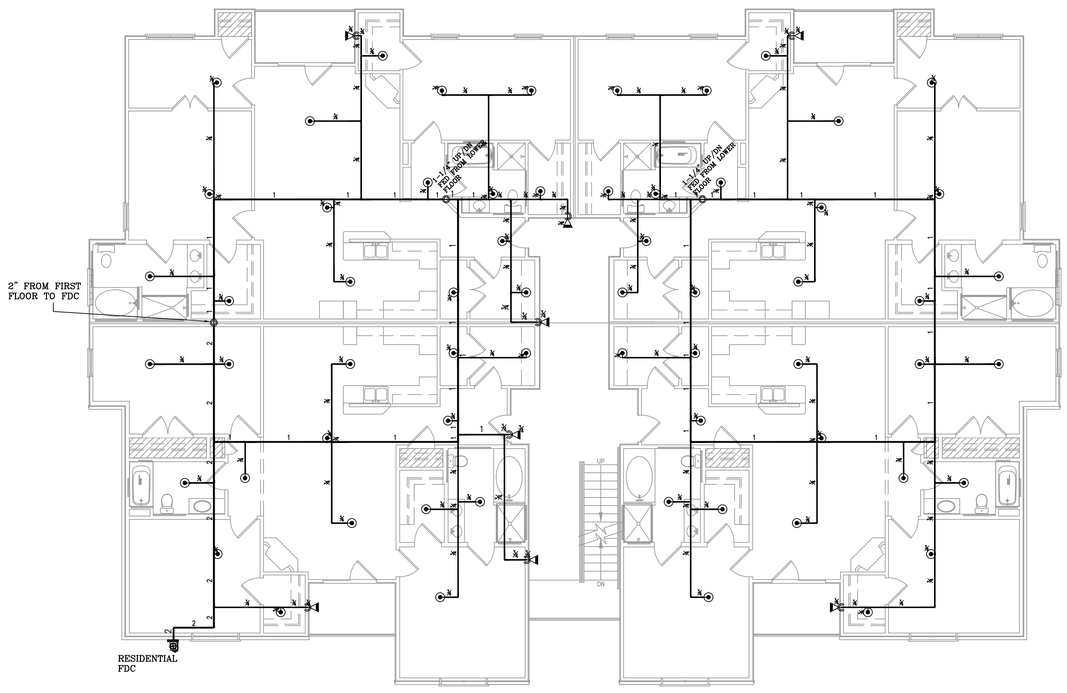

1 FP4 **2ND FLOOR PIPING PLAN**
1/8"-1'-0"

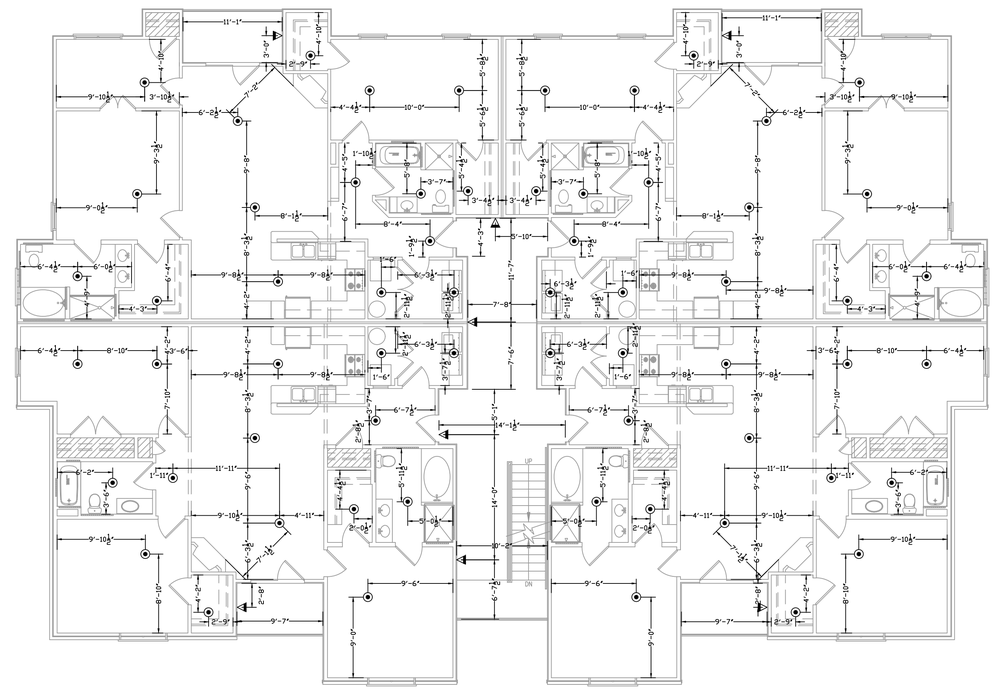

2 FP4 **2ND FLOOR R.C.P**
1/8"-1'-0"

NORTH CAROLINA STATE LICENSE #29733

APPROVING AGENCIES

APPROVING AUTHORITY: HARNETT COUNTY
UNDERWRITER: N/A
GENERAL CONTRACTOR: ANDERSON CREEK DEVELOPERS
ADDRESS: 125 WHISPERING PINES DR.
CITY & STATE: SPRING LAKE, NC 28390
PHONE NO.: (910) 814-2115
FAX NO.: N/A

SYSTEM DESIGN CRITERIA

TYPE SYSTEM: ■ WET ☐ DRY ☐ DELUGE ☐ PREACTION ☐ ANTI-FREEZE
NFPA STANDARD: ☐ 13 ☐ 13D ■ 13R ☐ 14 ☐ 250 ☐ 22 ☐ 24 ☐ 231 ☐ 231C ☐ 13 ☐ 116 ☐ 409
OCCUPANCY: RESIDENTIAL
HAZARD: RESIDENTIAL
MAXIMUM SPACING: SEE HYD. CALC.
MAX. DIST. FROM WALL TO SPRINKLER: LOCAL HOSE THREADS: N.S.T.
SPRINKLER TEMPERATURE RATING: 175°F
SLEEVES REQUIRED: NO
PIPE ID REQUIRED: NO
SLEEVES REQUIRED: NO
CENTER OF THE CEILING TILES

PIPE TYPES AND FITTING TYPES

LINE PIPING: CPVC
LINE FITTINGS: CPVC
MAIN PIPING: CPVC
MAIN FITTINGS: CPVC

GENERAL NOTES

1. Freeze Protection: The owner is responsible for maintaining a min. of 40° F in all areas where sprinkler piping is installed. Failure to maintain temperature is a violation of NFPA 13 & 25 and may void the sprinkler system warranty.
2. M.I.C. Protection: The owner is responsible for all detection/tamping prevention.
3. Design is subject to minor deviations arising from field conditions and/or trade coordination. Contractor is responsible for any damage to the system from debris arising from field conditions and/or trade coordination. Contractor is responsible for any damage to the system from debris entering the system from the sprinkler heads, pipe or fittings.
4. Underground provider to ensure load-ring is installed, 2-bolted, welded, flushed, and shall not require coulomb except in "as-built" if required by contract.
5. Underground provider to ensure load-ring is installed, 2-bolted, welded, flushed, flush blocked and a fully executed underground test certificate required per NFPA 13 section 8.15.1.2.1 is required to be provided to the AHJ prior to any damage to the system or components due to debris entering the system from the ground or underground piping system.
6. The sprinkler piping shall be installed in accordance with the manufacturer's specifications, NFPA 13, and LEO Safety America and is not to be duplicated and/or distributed without written authorization from FLSA.
7. Sprinkler piping shall be installed in accordance with the manufacturer's specifications, NFPA 13, and LEO Safety America and is not to be duplicated and/or distributed without written authorization from FLSA.
8. Underground provider to ensure that the underground test certificate is provided to the AHJ prior to any damage to the system or components. Any other form of testing is unacceptable.

#	DATE	DESCRIPTION	BY
1	7/2/2020	SUBMITTAL TO AHJ	RCC
2			
3			
4			
5			
6			
7			
8			

GRAPHIC SCALE: 1/8" = 1'- 0"

THIS FIRE SPRINKLER PLANNING AND DESIGN DRAWING HAS BEEN PREPARED BY FIRE & LIFE SAFETY AMERICA, INC. AS A LICENSED FIRE SPRINKLER CONTRACTOR IN ACCORDANCE WITH THE LICENSE LAWS OF THE GENERAL STATUTES FOR THE STATE OF NORTH CAROLINA.

EXCLUSIVE USE PURSUANT TO G.S.-89C-25(b) IS FOR FIRE & LIFE SAFETY AMERICA, INC. AND FIRE & LIFE SAFETY AMERICA, INC. SHALL PERFORM ANY AND ALL INSTALLATION WORK AND OTHER WORK PERFORMED IN RELIANCE ON THE DRAWING PURSUANT TO G.S.-55B-15(A)(2).

INSTALLATION WORK OR ANY OTHER WORK PERFORMED BY ANOTHER PERSON OR ENTITY WITH ANY COPY OF THIS DRAWING OR ANY COPY THEREOF IS STRICTLY PROHIBITED.

COPYRIGHT FIRE & LIFE SAFETY AMERICA, INC. ALL RIGHTS RESERVED.

RICHMOND, VA CHESAPEAKE, VA ROANOKE, VA SPRINGFIELD, VA ORLANDO, FL
CHARLOTTE, NC HOUSTON, TX ST. LOUIS, MO SAN ANTONIO, TX DALLAS, TX AUSTIN, FL
PITTSBURGH, PA BALTIMORE, MD ATLANTA, GA
1721 Round Rock Drive
Raleigh, NC 27615
PHONE: (919) 877-0609
FAX: (919) 877-0775

FIRE & LIFE SAFETY AMERICA

JOB #:	20NC1473	LEVEL 2 FIRE PROTECTION PLAN	DRAWING #: FP3
DATE:	6/11/2020	FAIRWAY POINTE BLDG 17	
DRAWN BY:	R. COLLINS	288 GALLERY DR.	
SCALE:	AS NOTED	SPRING LAKE, NC 28390	OF 4

SPRINKLER SUMMARY										
SYM	TYPE	FINISH	TEMP	ORIF.	"K"	NPT	MANUF.	SIN#	ESCUTCHEON	QTY.
⊙	QR RES. PENDENT	WHITE	175°	1/2"	4.9K	1/2"	VIKING	VK468	SEMI-RECESSED	62
◁	QR DRY SIDEWALL	WHITE	175°	1/2"	5.6K	1/2"	VIKING	VK178	ADJ. STANDARD	8
⊗	QR PENDENT	WHITE	175°	1/2"	5.6K	1/2"	VIKING	VK3021	SEMI-RECESSED	0
			◦							0
			◦							0
			◦							0
			◦							0
			◦							0
TOTAL SPRINKLERS THIS PROJECT:			196				TOTAL SPRINKLERS THIS DRAWING:			70

NORTH CAROLINA STATE LICENSE #29733

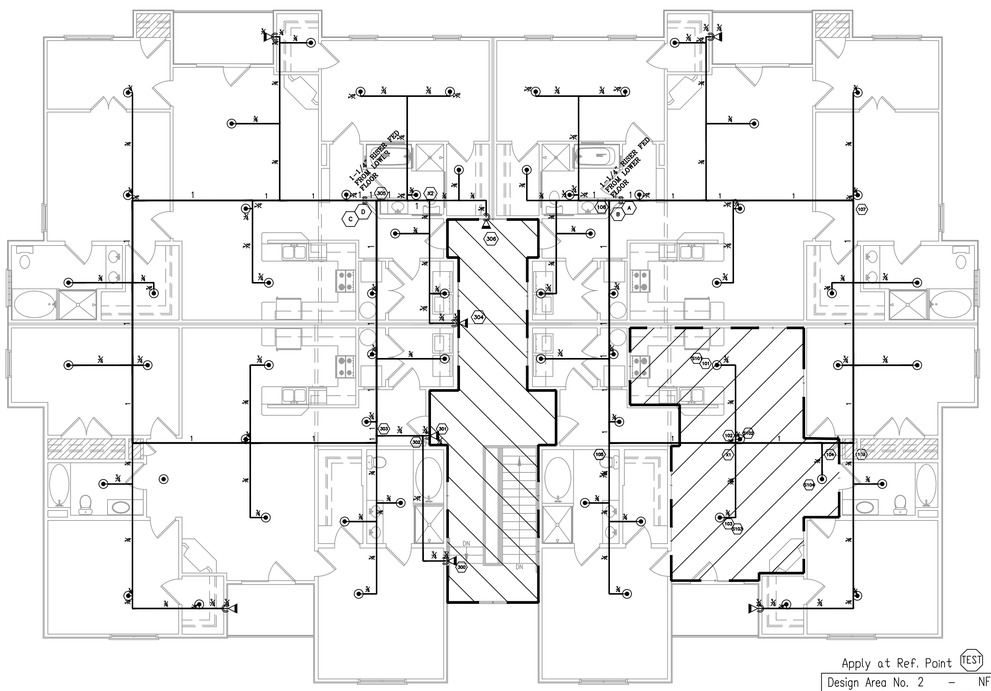

1 FP4 **3RD FLOOR PIPING PLAN**
1/8"-1'-0"

Apply at Ref. Point TEST

Design Area No. 1	–	LIGHT	
Density 0.10 Area	4	SPRINKLERS	
Flow 69.499 gpm @	63.600 psi		
Includes N/A	gpm Hose allowance		

SAFETY FACTOR: 46.08 psi

Apply at Ref. Point TEST

Design Area No. 2	–	NFPA-13R	
Density 0.05 Area	4	SPRINKLERS	
Flow 85.164 gpm @	86.413 psi		
Includes 0	gpm Hose allowance		

SAFETY FACTOR: 23.12 psi

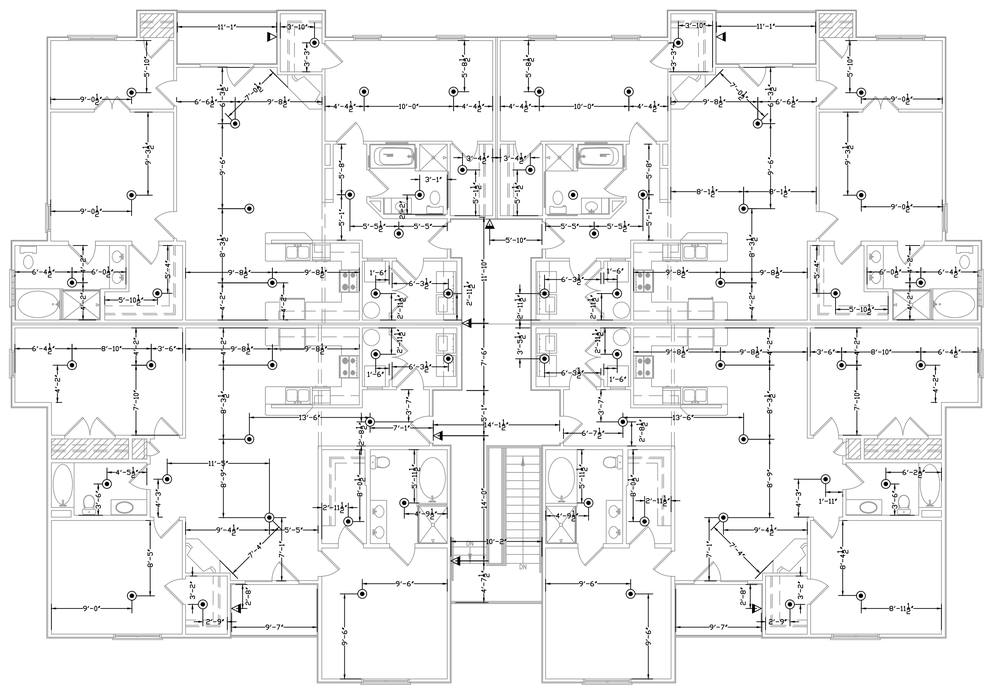

2 FP4 **3RD FLOOR R.C.P**
1/8"-1'-0"

THIS FIRE SPRINKLER PLANNING AND DESIGN DRAWING HAS BEEN PREPARED BY FIRE & LIFE SAFETY AMERICA, INC. AS A LICENSED FIRE SPRINKLER CONTRACTOR WITHIN ACCEPTED STANDARDS OF THE GENERAL STATUTES FOR THE STATE OF NORTH CAROLINA.

EXCLUSIVE USE PURSUANT TO G.S.-88C-250(3) IS FOR FIRE & LIFE SAFETY AMERICA, INC. AND FIRE & LIFE SAFETY AMERICA, INC. SHALL BE HELD HARMLESS FOR ALL ALTERATIONS AND OTHER WORK PERFORMED IN RELIANCE ON THE DRAWING PURSUANT TO G.S.-55B-15(AC2).

INSTALLATION WORK OR ANY OTHER WORK PERFORMED BY ANOTHER PERSON OR ENTITY BASED UPON THIS DRAWING OR ANY COPY THEREOF IS STRICTLY PROHIBITED.

COPYRIGHT FIRE & LIFE SAFETY AMERICA, INC., ALL RIGHTS RESERVED.

RICHMOND, VA CHESAPEAKE, VA ROANOKE, VA SPRINGFIELD, VA ORLANDO, FL
CHARLOTTE, NC RALEIGH, NC GREENSBORO, NC WILMINGTON, NC ATLANTA, GA AUSTIN, TX
HOUSTON, TX SAN ANTONIO, TX DALLAS, TX
1231 Round Rock Drive
Raleigh, NC 27615
PHONE: (919) 872-5925
FAX: (919) 877-5775

FIRE & LIFE SAFETY AMERICA

JOB #:	20NC-1473	LEVEL 3 FIRE PROTECTION PLAN	DRAWING #: FP4
DATE:	6/11/2020	FAIRWAY POINTE BLDG 17	
DRAWN BY:	R. COLLINS	288 GALLERY DR.	OF 4
SCALE:	AS NOTED	SPRING LAKE, NC 28390	

SYSTEM DESIGN CRITERIA

TYPE SYSTEM: ■ WET ☐ DRY ☐ DELUGE ☐ PREACTION ☐ ANTI-FREEZE

NFPA STANDARD: ☐ 13 ☐ 13D ■ 13R ☐ 14 ☐ 20 ☐ 22 ☐ 24 ☐ 231 ☐ 231C ☐ 13 ☐ 16 ☐ 409

OCCUPANCY: **RESIDENTIAL - 13R**

HAZARD: **RESIDENTIAL**

MAXIMUM SPACING: **SEE FPD CALC.** - LOCAL HOSE THREADS: **N.S.T.**

PIPE ID REQUIRED: **NO**

SPRINKLERS SHALL BE INSTALLED IN THE CENTER OF THE CEILING TILES

SLEEVES REQUIRED: **NO**

PIPE TYPES AND FITTING TYPES

LINE PIPING: **CPVC** — LINE FITTINGS: **CPVC**

MAIN PIPING: **CPVC** — MAIN FITTINGS: **CPVC**

GENERAL NOTES

1. Freeze Protection: The owner is responsible for maintaining a min. of 40° F temp. in all areas where sprinkler piping is installed. FLSA is not responsible for all detection/testing/prevention.
2. M.E.C. Protection: The owner is responsible for all detection/testing/prevention.
3. Design is subject to minor deviations arising from field conditions and/or trade coordination. Any deviations will be documented on the final shop drawings and shall not require resubmittal except in "as-built" if required by contract documents.
4. Underground provide to ensure lead-in is plumbed, 2-bolted, welded, flushed, thrust blocked and a fully executed underground test certificate required per NFPA 24 is the responsibility of the underground contractor. FLSA is not responsible for damage to in system or components due to debris entering the system from underground water lines, provided by others. FLSA is not responsible for underground water lines, provided by others. Fire & Life Safety America is not to be replicated and/or distributed without written authorization from FLSA.
5. "Engineered" Fittings are shown for illustrative purposes only. Actual fittings may be alternate configurations depending on manufacturer, and/or depending on system requirements. Any other forms of piping is excluded.

APPROVING AGENCIES

APPROVING AUTHORITY: **HARNETT COUNTY**

UNDERWRITER: **N/A**

GENERAL CONTRACTOR: **ANDERSON CREEK DEVELOPERS**

ADDRESS: **125 WHISPERING PINES DR.**

CITY & STATE: **SPRING LAKE, NC 28390**

PHONE NO.: **(910) 814-2115**

FAX NO.: **N/A**

GRAPHIC SCALE: 1/8" = 1'-0"

REVISIONS

#	DATE	DESCRIPTION	BY
1	7/8/2020	SUBMITTAL TO AHJ	RCC